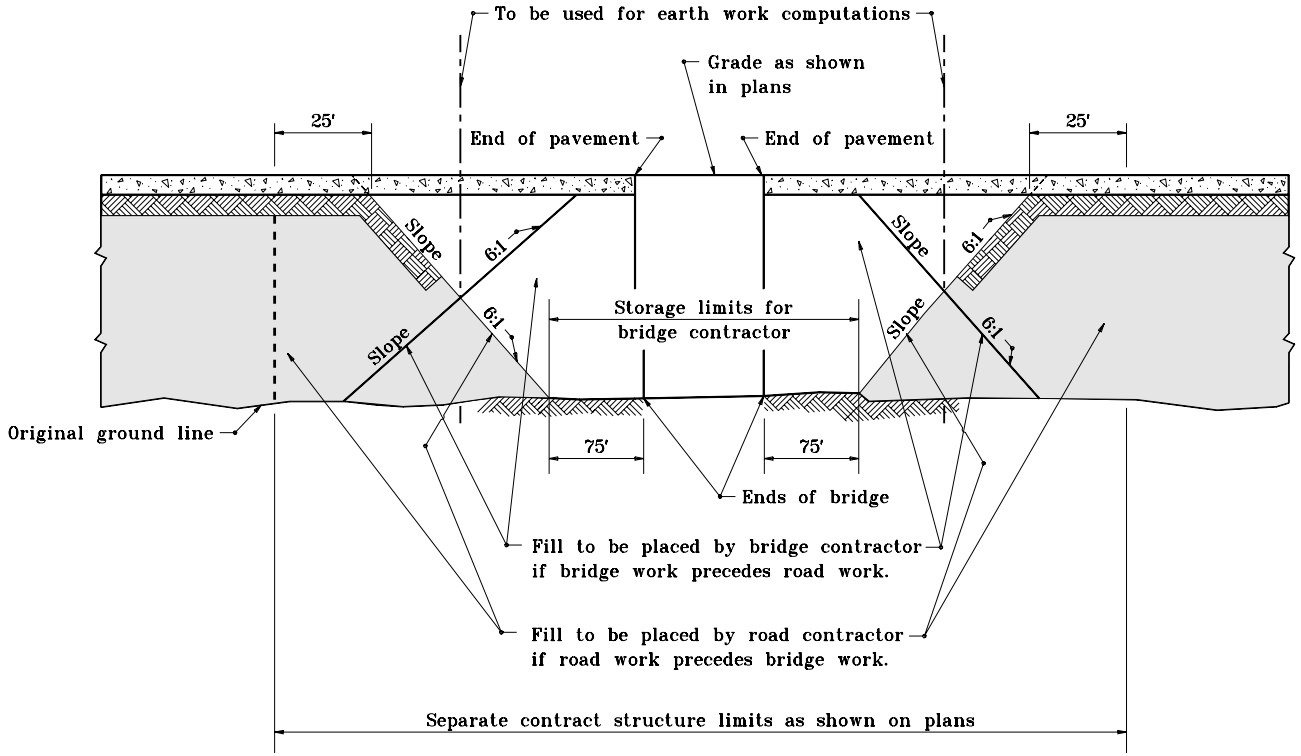

METHOD FOR DETERMINING QUANTITIES WITHIN STRUCTURE LIMITS

INDIANA DEPARTMENT OF TRANSPORTATION

ROAD & BRIDGE CONTRACT LIMITS

SEPTEMBER 2000

STANDARD DRAWING NO. **E 105-RBCL-01**

ANTHONY L. UREMOVICH REGISTERED No. 18095 STATE OF INDIANA PROFESSIONAL ENGINEER

DESIGN STANDARDS ENGINEER

/s/ Anthony L. Uremovich 9-01-00
DESIGN STANDARDS ENGINEER — DATE

/s/ Firooz Zandi 9-01-00
CHIEF HIGHWAY ENGINEER — DATE

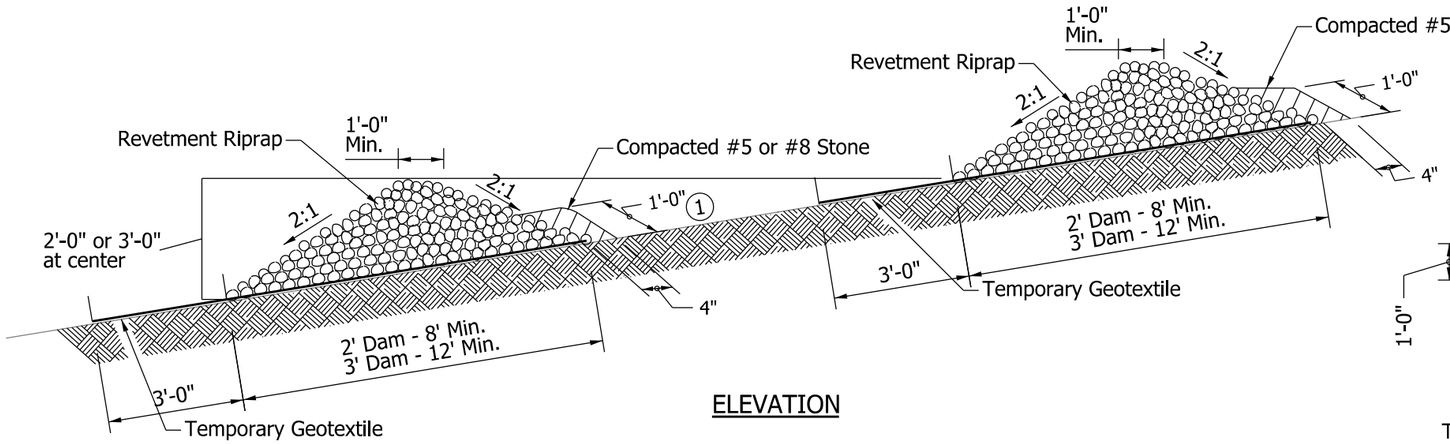

ELEVATION

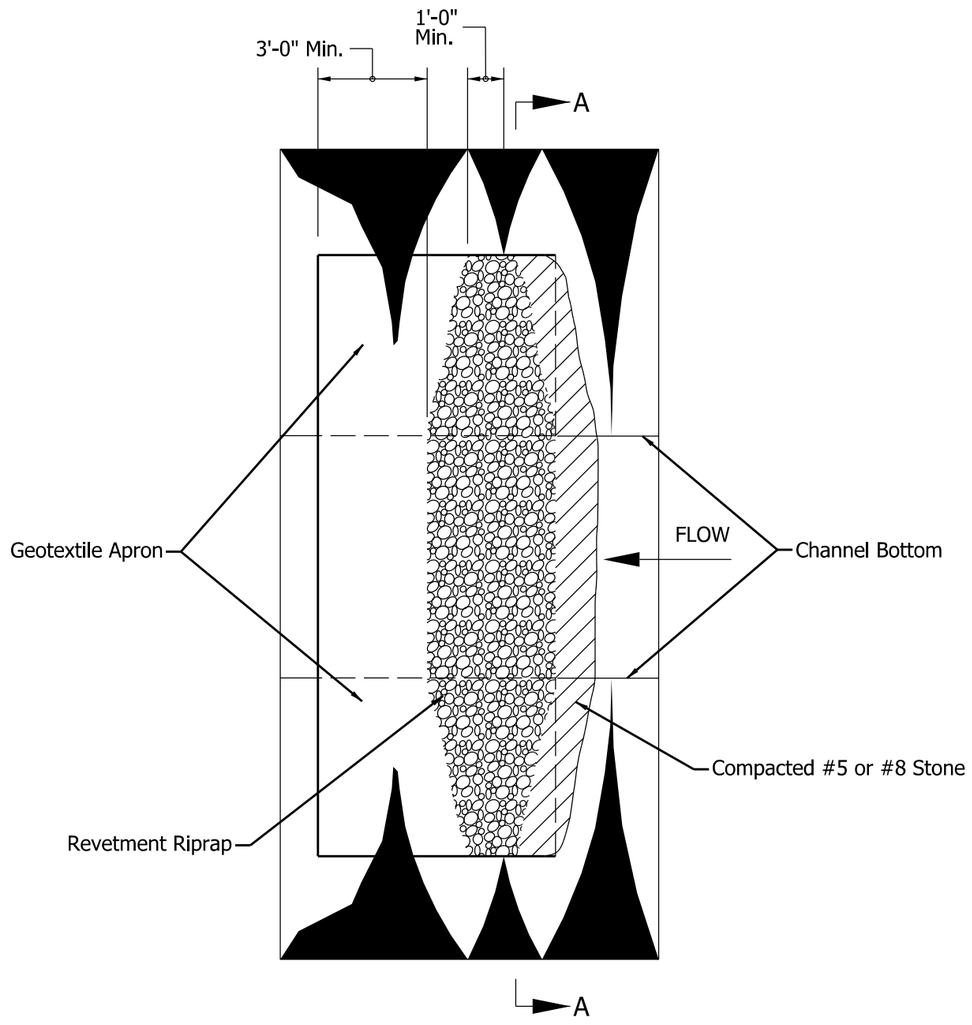

PLAN

NOTES:

1. Riprap ditch check dams shall be spaced such that the top of the downstream check dam is at the same elevation as the toe of the adjacent upstream check dam.

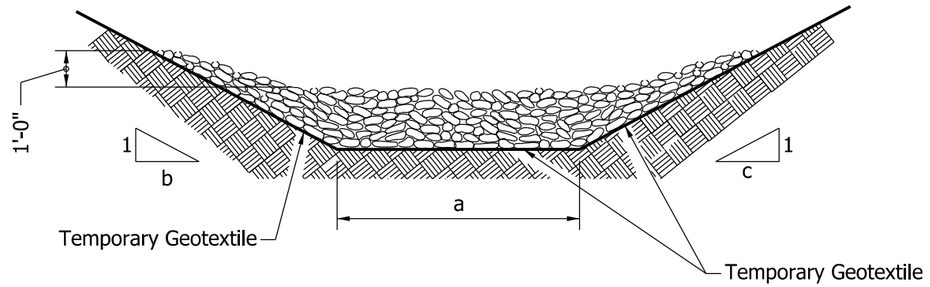

SECTION A-A

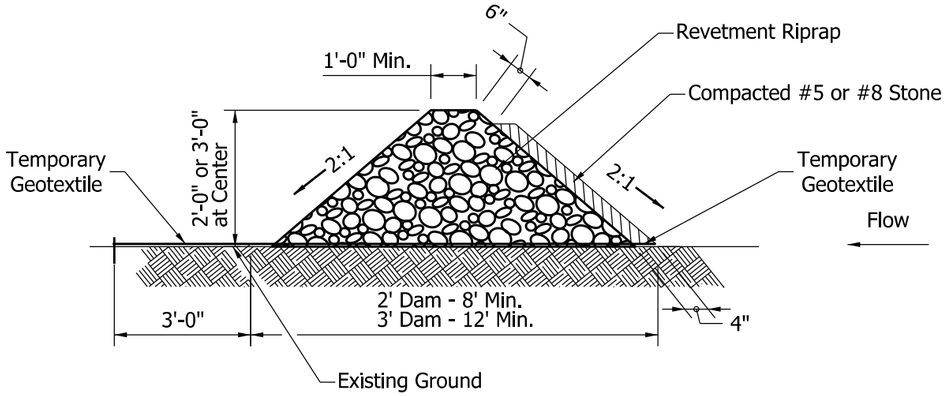

CHECK DAM MODIFIED

INDIANA DEPARTMENT OF TRANSPORTATION

TEMPORARY CHECK DAM
REVETMENT RIPRAP

SEPTEMBER 2012

STANDARD DRAWING NO. E 205-TECD-01

RICHARD L. VanCLEAVE
REGISTERED
No. 9750
STATE OF INDIANA
PROFESSIONAL ENGINEER

/s/ Richard L. VanCleave 09/04/12
SUPERVISOR, ROADWAY STANDARDS DATE

/s/ Mark A. Miller 09/04/12
CHIEF ENGINEER DATE

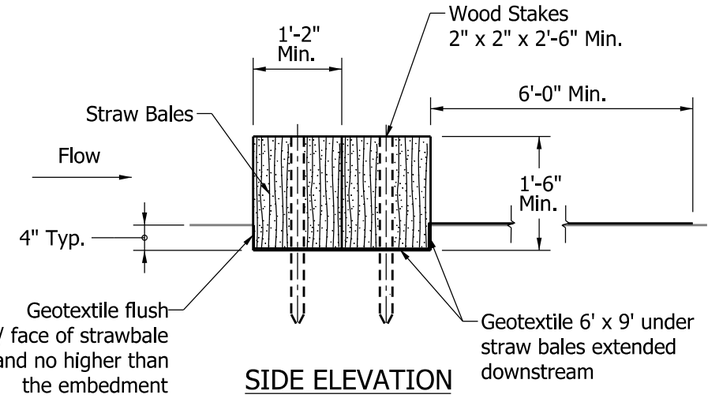

SIDE ELEVATION
STRAW BALE INSTALLATION

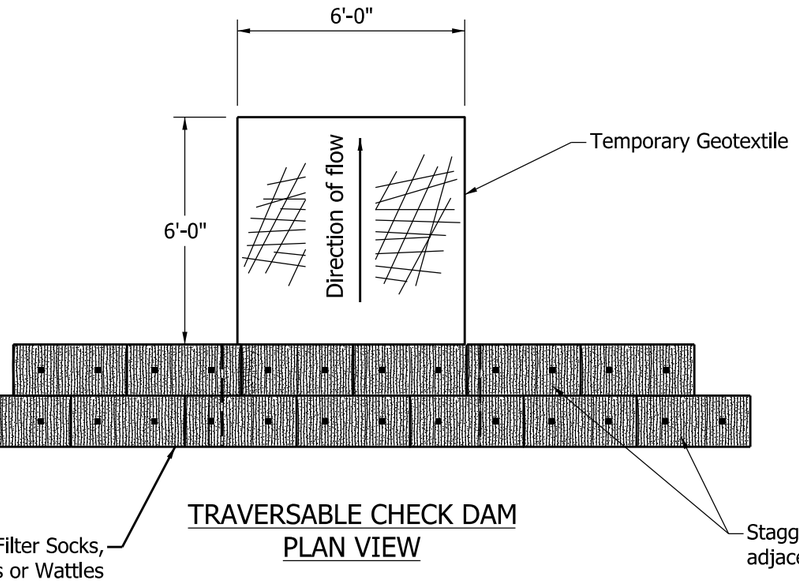

TRAVERSABLE CHECK DAM
PLAN VIEW

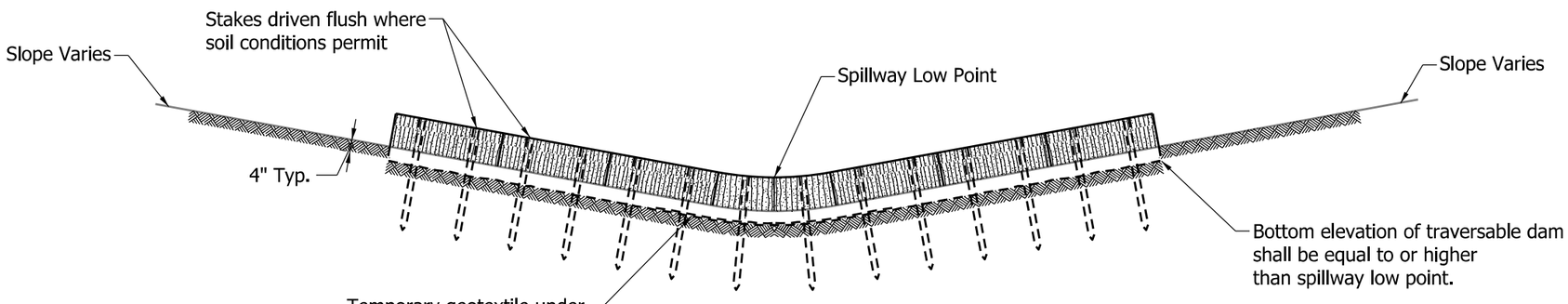

TRAVERSABLE CHECK DAM
FRONT ELEVATION

NOTES:

1. Ditch check dams shall be spaced such that the top of the downstream check dam is at the same elevation as the toe of the adjacent upstream check dam.

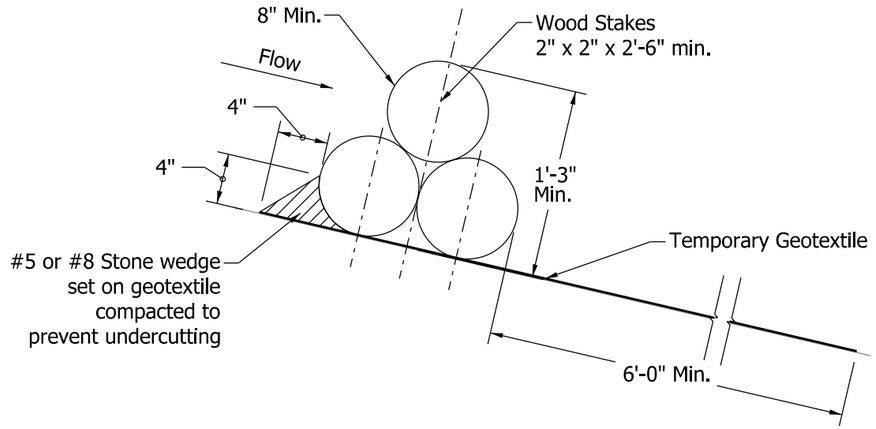

SIDE ELEVATION
ROLLED EROSION CONTROL PRODUCT OPTION

Stacking Method:
Filter Socks, Fiber Rolls or Wattle Installation

INDIANA DEPARTMENT OF TRANSPORTATION

TEMPORARY CHECK DAM, TRAVERSABLE
FOR CLEAR ZONE

SEPTEMBER 2012

STANDARD DRAWING NO. E-205-TECD-02

RICHARD L. VanCLEAVE
REGISTERED
No. 9750
STATE OF INDIANA
PROFESSIONAL ENGINEER

/s/ Richard L. VanCleave 09/04/12
SUPERVISOR, ROADWAY STANDARDS DATE

/s/ Mark A. Miller 09/04/12
CHIEF ENGINEER DATE

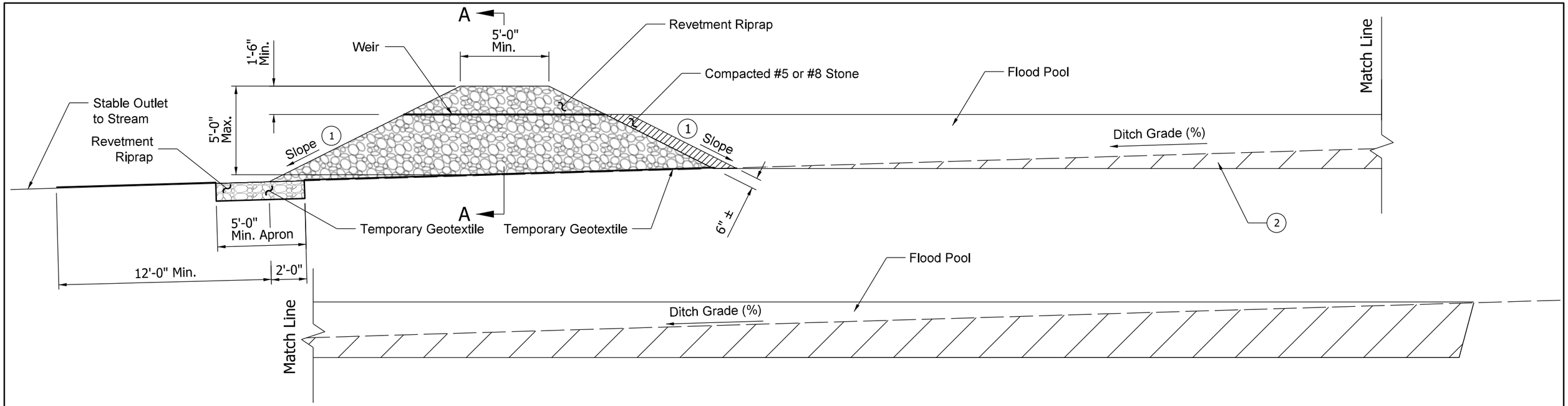

ELEVATION VIEW

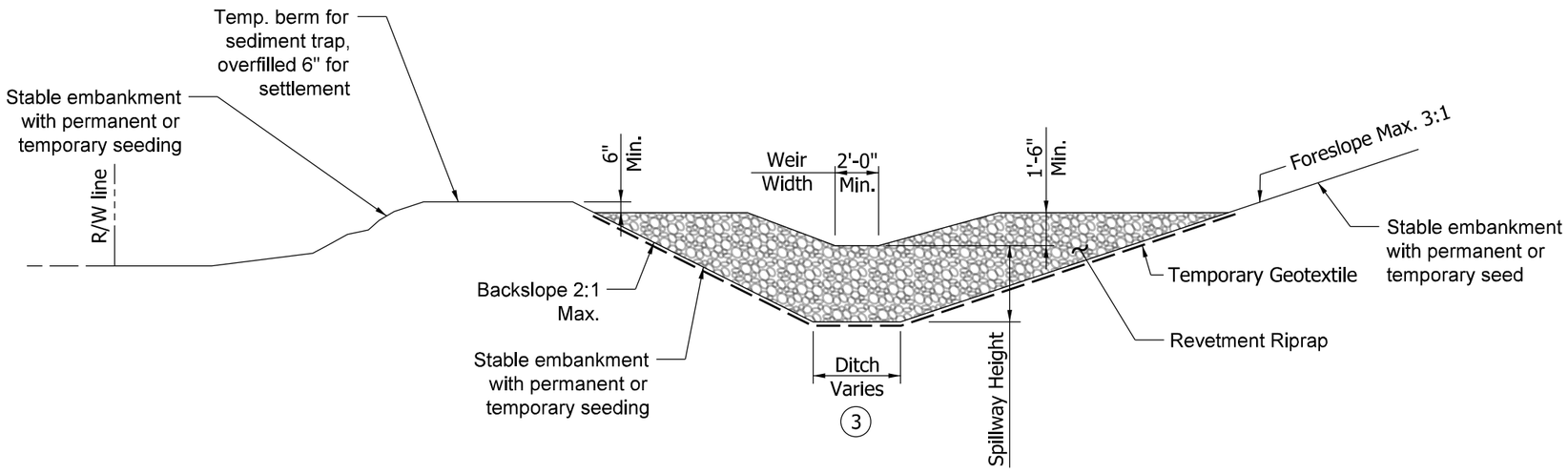

SECTION A-A

NOTES:

1. Slope should be 3:1 maximum on the near side with respect to the direction of traffic while the far side slope may be 2:1 maximum.
2. This area may be excavated below planned ditch grade to achieve sediment trap capacity. It shall not be excavated to below the bottom elevation of sediment trap riprap. However, over-excavation does not count toward trap capacity of 2-year 24-hour storm event.
3. Spillway width equals ditch bottom width, min. 2 ft.

INDIANA DEPARTMENT OF TRANSPORTATION

TEMPORARY SEDIMENT TRAP

SEPTEMBER 2012

STANDARD DRAWING NO. E 205-TECD-03

RICHARD L. VanCLEAVE REGISTERED No. 9750 STATE OF INDIANA PROFESSIONAL ENGINEER

/s/ Richard L. VanCleave 09/04/12
SUPERVISOR, ROADWAY STANDARDS DATE

/s/ Mark A. Miller 09/04/12
CHIEF ENGINEER DATE

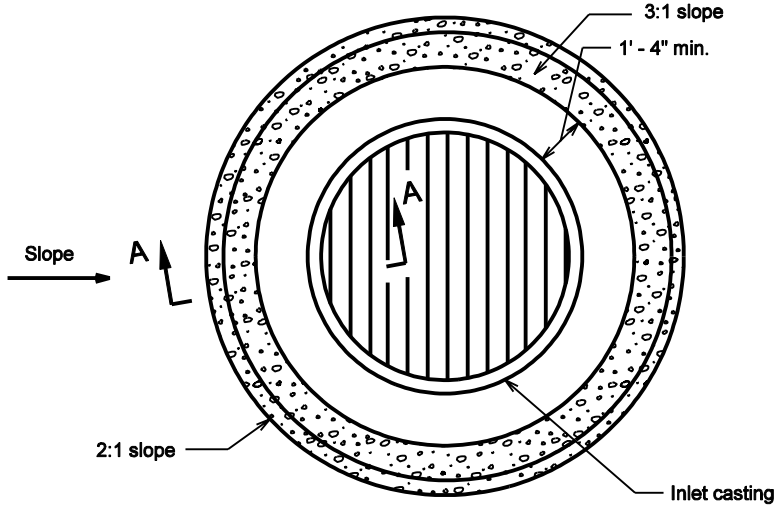

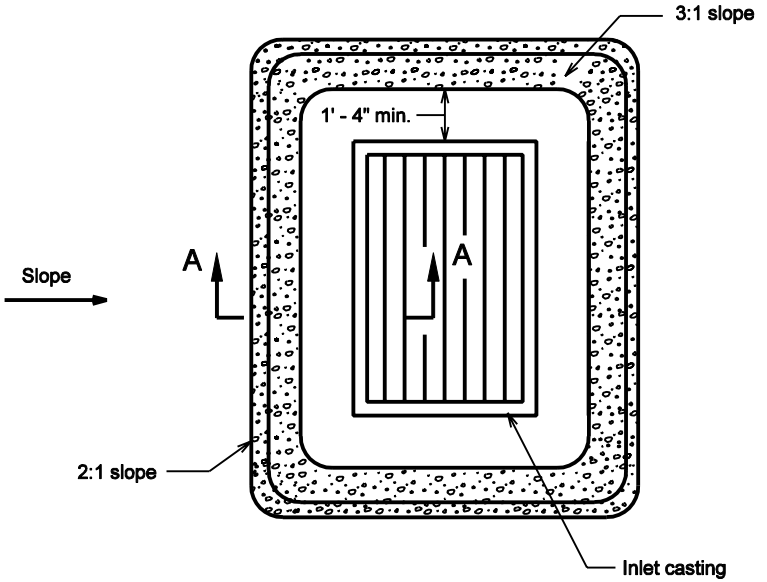

GENERAL NOTES

1. H = h + 0.25, ft
2. Weight of coarse aggregate #2, Tons:
   (6.28 / 27) (0.67² + 2.5H) (1 + 3H + 1/2 inlet width) (0.6)
3. Weight of coarse aggregate #8, Tons:
   (6.28 / 27) (H) (1 + 4H + 1/2 inlet widt) (0.6)

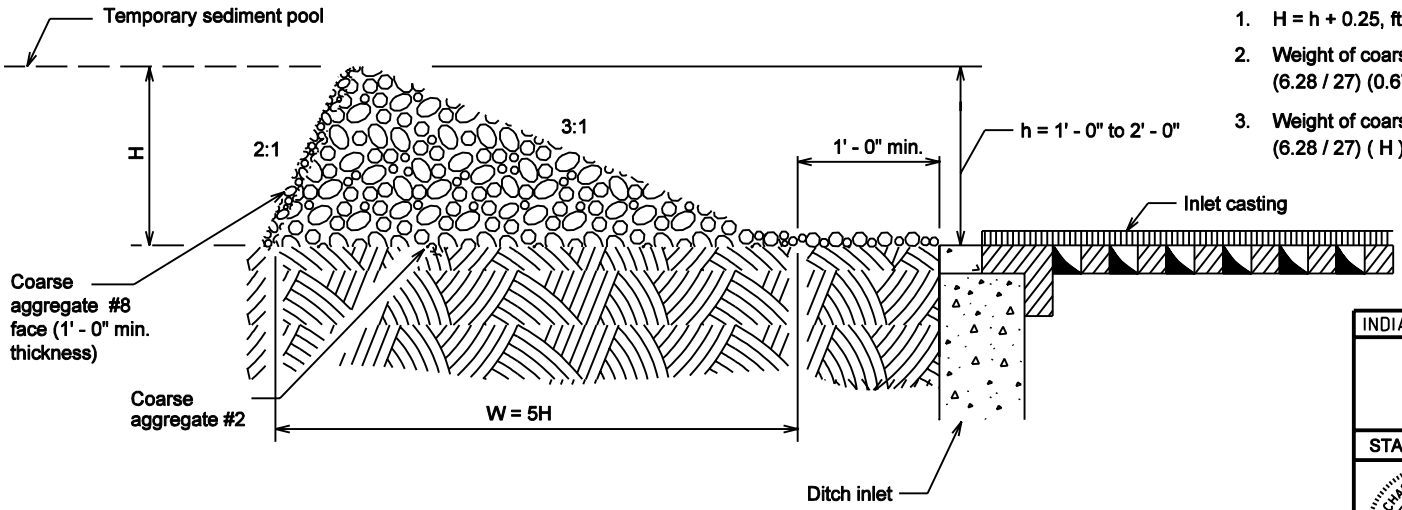

SECTION A-A

INDIANA DEPARTMENT OF TRANSPORTATION

TEMPORARY DITCH INLET PROTECTION, GRAVEL RING

MARCH 2002

STANDARD DRAWING NO. E 205-TECI-01

RICHARD L. VanCLEAVE REGISTERED No. 9750 STATE OF INDIANA PROFESSIONAL ENGINEER

DESIGN STANDARDS ENGINEER

/s/ Richard L VanCleave 3-01-02
DESIGN STANDARDS ENGINEER DATE

/s/ Richard K. Smutzer 3-01-02
CHIEF HIGHWAY ENGINEER DATE

NOTES:

1. The frame shall be wrapped with one continuous piece of geotextile fabric, and a 2'–0 overlap shall be provided.

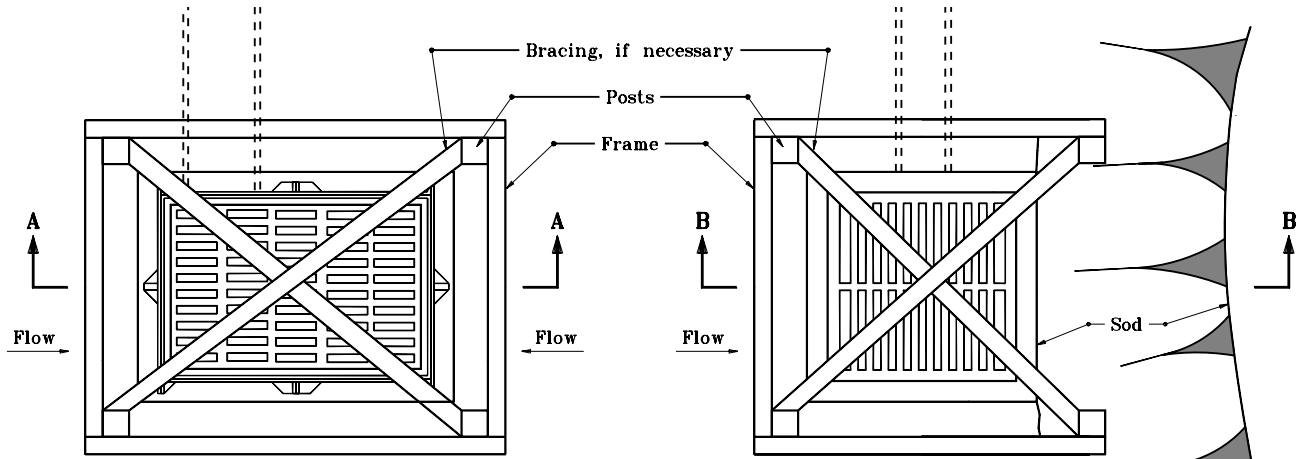

PLAN VIEW

PLAN VIEW

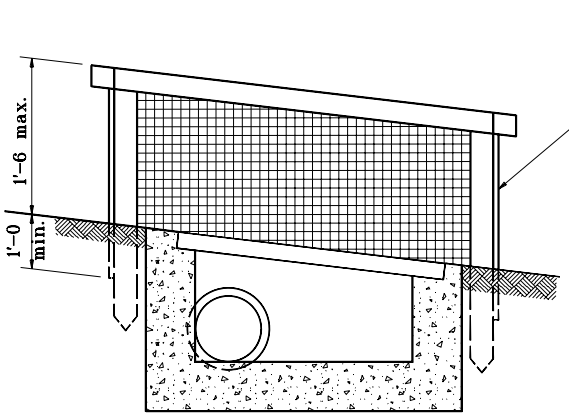

SECTION A–A

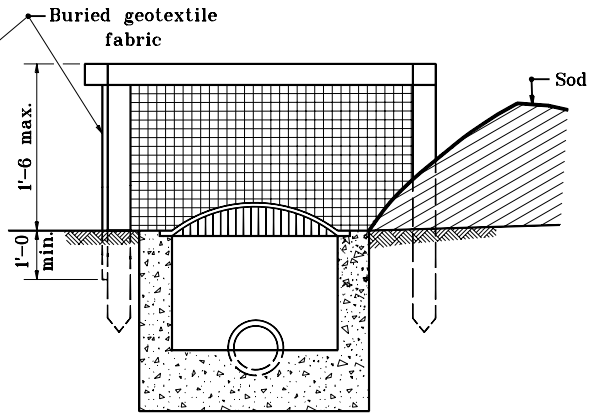

SECTION B–B

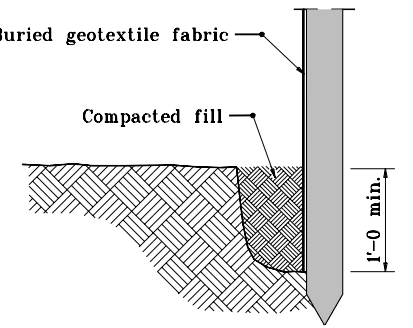

TRENCH DETAIL

INDIANA DEPARTMENT OF TRANSPORTATION

TEMPORARY DITCH INLET PROTECTION, GEOTEXTILE BOX

MARCH 2002

STANDARD DRAWING NO. E 205–TECI–02

RICHARD L. VanCLEAVE REGISTERED No. 9750 STATE OF INDIANA PROFESSIONAL ENGINEER

DESIGN STANDARDS ENGINEER

/s/ Richard L. VanCleave 3–01–02
DESIGN STANDARDS ENGINEER — DATE

/s/ Richard Smutzer 3–01–02
CHIEF HIGHWAY ENGINEER — DATE

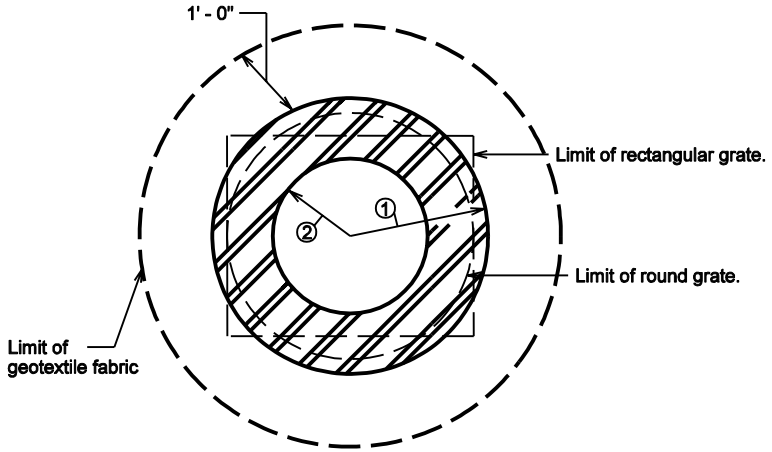

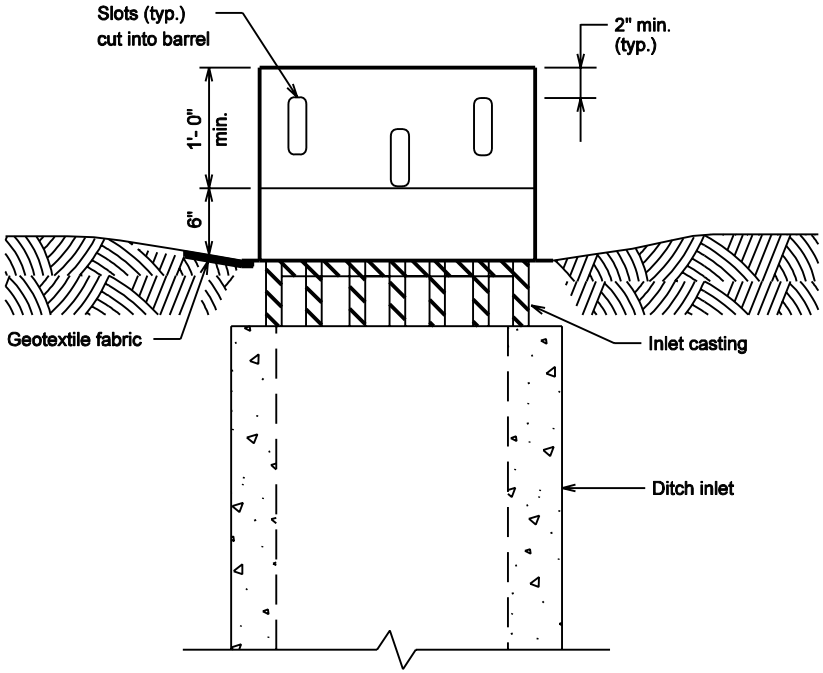

GENERAL NOTES

① Radius shall be equal to or greater than that of a round casting grate, or equal to, or greater than half of the longer length of a rectangular grate.

② Distance shall be greater than half of the radius of a round grate, or greater than one-quarter of the shorter length of a rectangular grate.

3 Slots shall be 5" min. height by 1" min. width.

INDIANA DEPARTMENT OF TRANSPORTATION

TEMPORARY DITCH INLET PROTECTION SLOTTED BARREL

MARCH 2002

STANDARD DRAWING NO. E 205-TECI-03

RICHARD L. VANCLEAVE REGISTERED No. 9750 STATE OF INDIANA PROFESSIONAL ENGINEER

DESIGN STANDARDS ENGINEER

/s/ Richard L. VanCleave 3-01-02
DESIGN STANDARDS ENGINEER DATE

/s/ Richard K. Smutzer 3-01-02
CHIEF HIGHWAY ENGINEER DATE

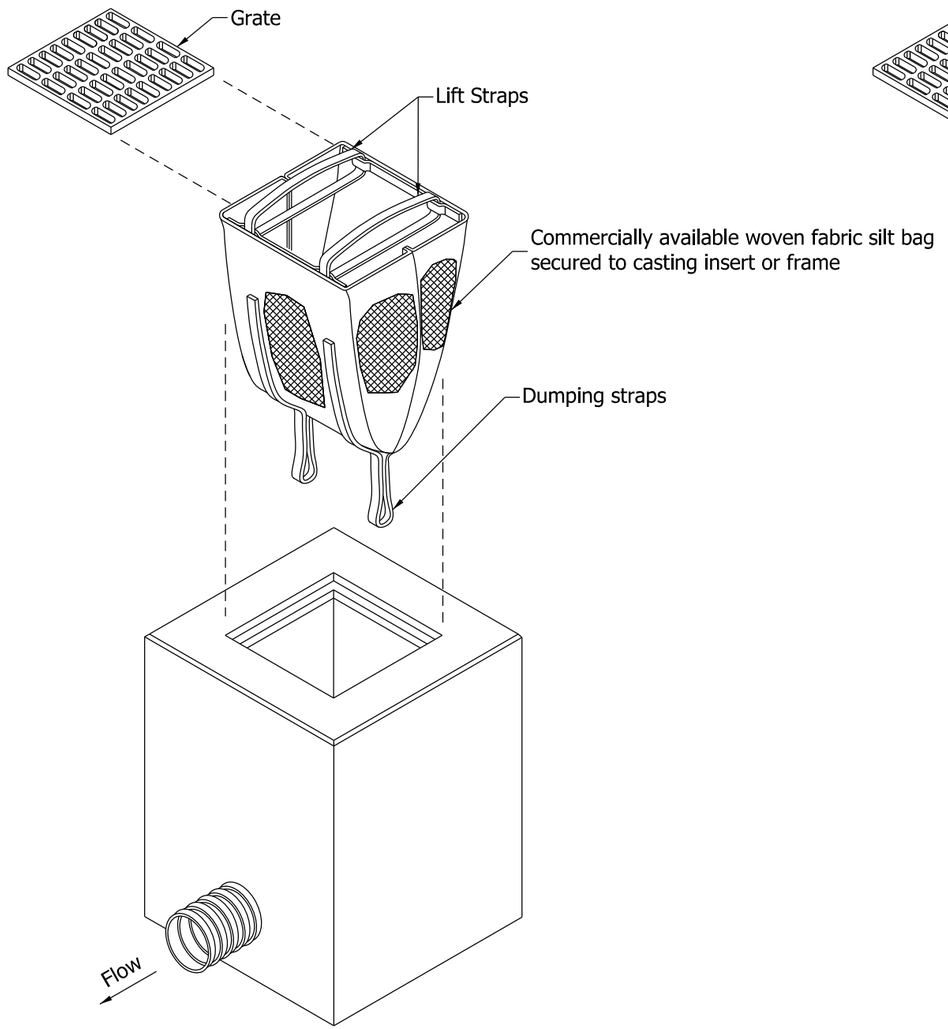

MANUFACTURED

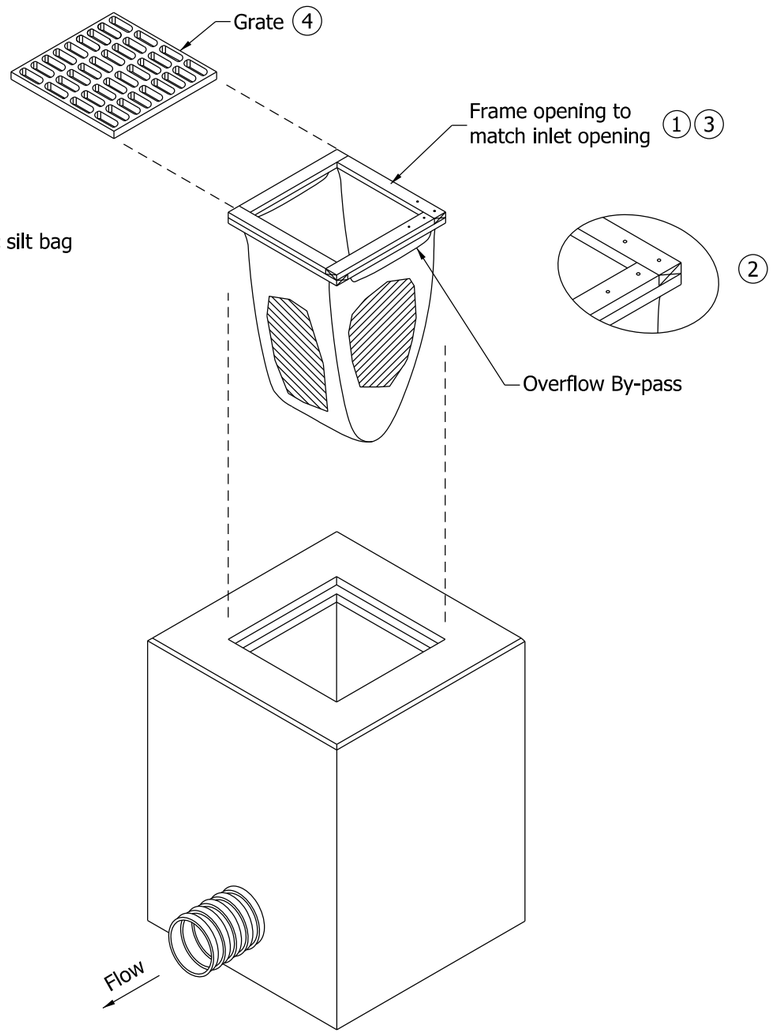

BUILT IN FIELD

NOTES:

1. Frame opening sized to match inlet opening.
2. Geotextile bag shall be fabricated from piece of geotextile 2 times the opening size pushed through opening to form weephole. Secured by nails.
3. Frame with bag to be placed over inlet opening.
4. Bag frame shall be secured in place by weight of inlet grate. Grate may be rotated 45 degrees to the bag's frame.

INDIANA DEPARTMENT OF TRANSPORTATION

TEMPORARY EROSION CONTROL INLET BAG PROTECTION

SEPTEMBER 2012

STANDARD DRAWING NO. E 205-TECI-04

RICHARD L. VanCLEAVE
REGISTERED
No. 9750
STATE OF INDIANA
PROFESSIONAL ENGINEER

/s/ Richard L. VanCleave 09/04/12
SUPERVISOR, ROADWAY STANDARDS DATE

/s/ Mark A. Miller 09/04/12
CHIEF ENGINEER DATE

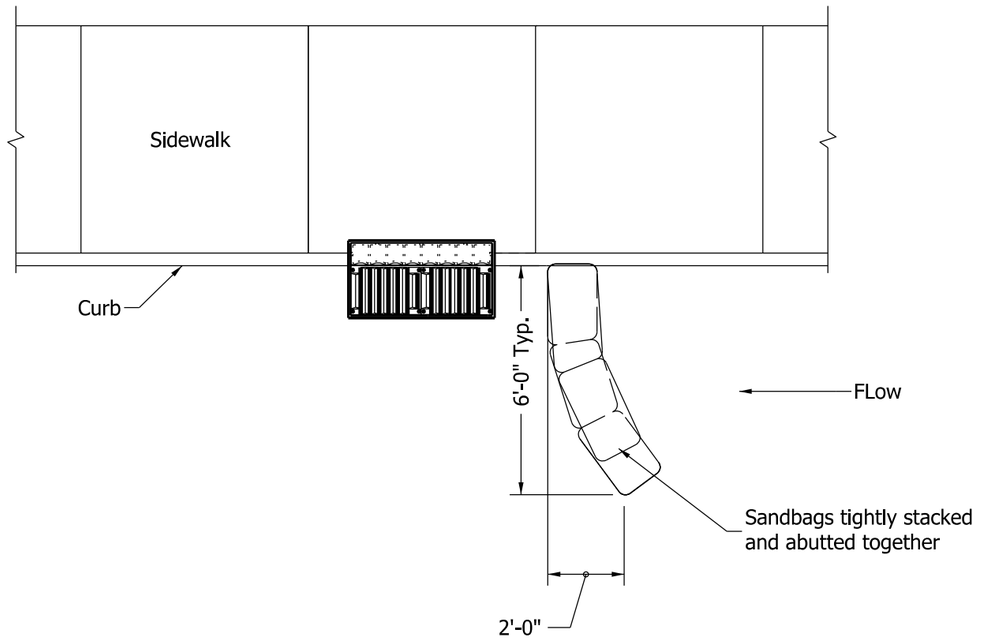

SINGLE DIRECTION FLOW

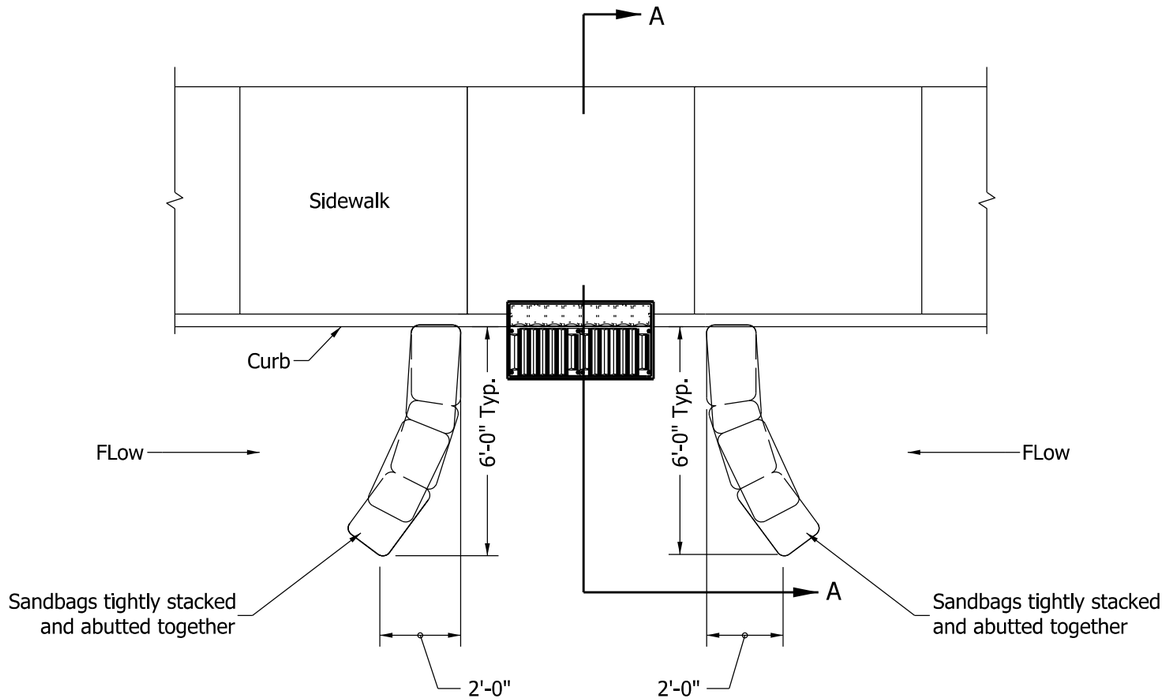

DUAL DIRECTION FLOW

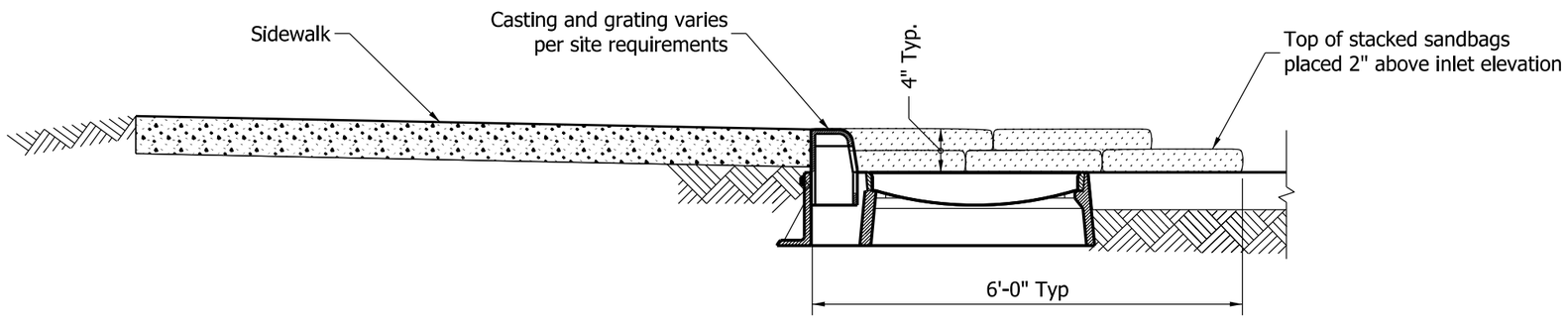

SECTION A-A

INDIANA DEPARTMENT OF TRANSPORTATION

TEMPORARY EROSION CONTROL INLET
SANDBAG CURB INLET PROTECTION

SEPTEMBER 2012

STANDARD DRAWING NO. E 205-TECI-05

RICHARD L. VanCLEAVE
REGISTERED
No. 9750
STATE OF INDIANA
PROFESSIONAL ENGINEER

/s/ Richard L. VanCleave 09/04/12
SUPERVISOR, ROADWAY STANDARDS DATE

/s/ Mark A. Miller 09/04/12
CHIEF ENGINEER DATE

NOTE:

(1) For use with inlets of up to 3' x 3'.

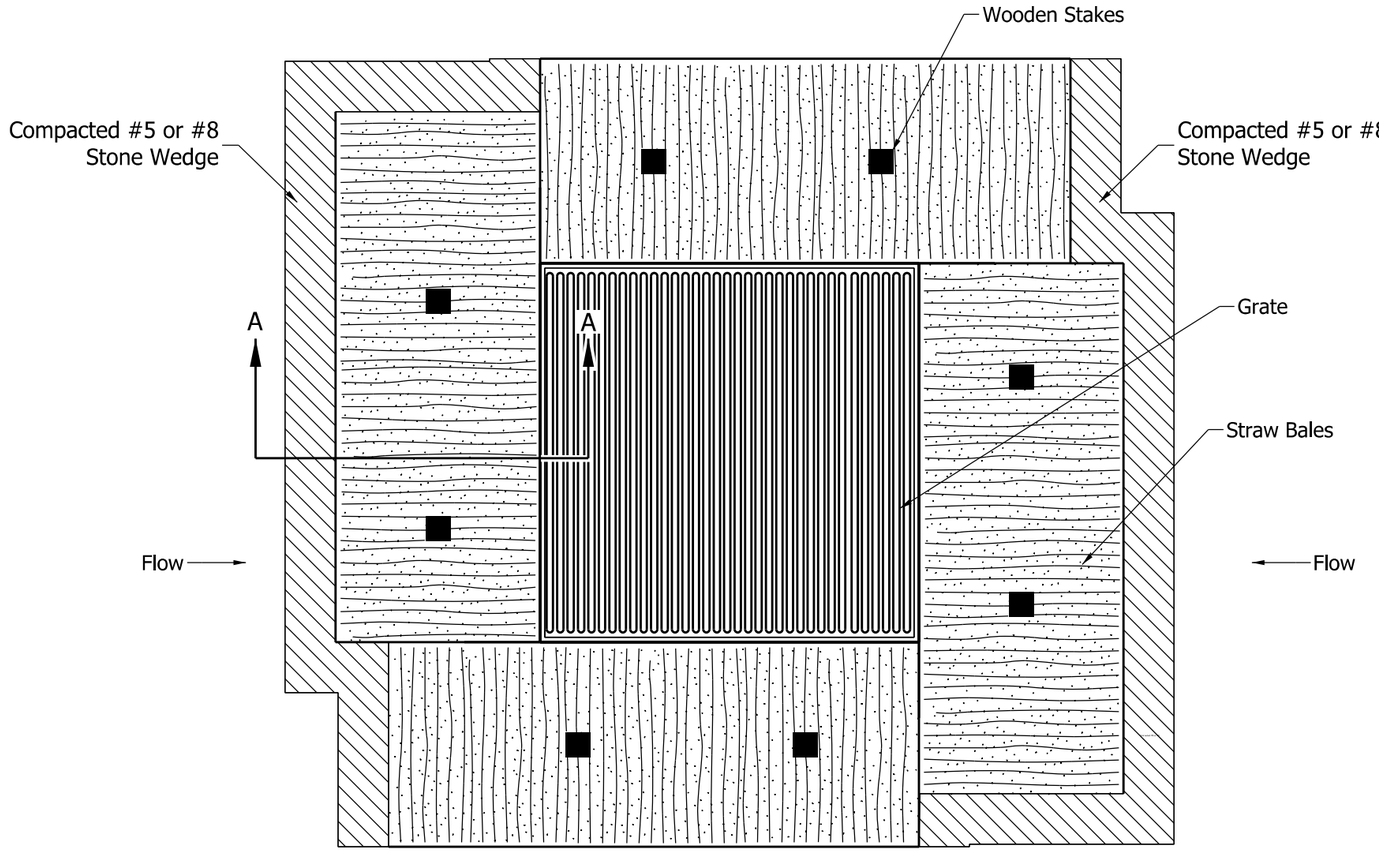

PLAN VIEW (1)

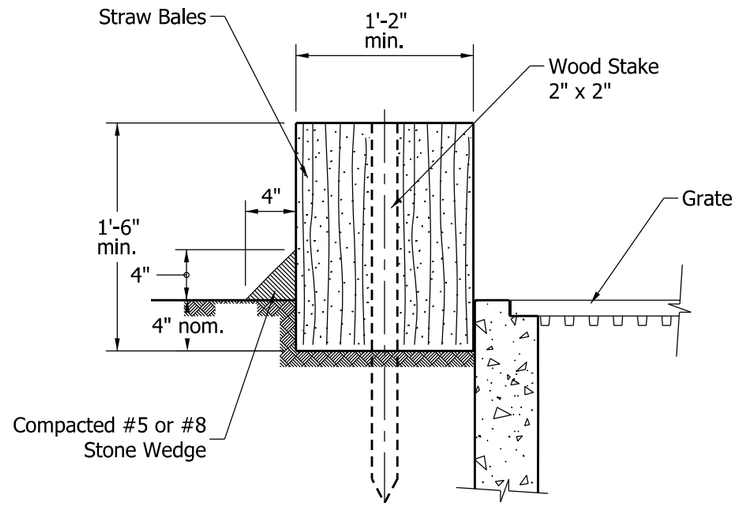

SECTION A-A

INDIANA DEPARTMENT OF TRANSPORTATION

TEMPORARY EROSION CONTROL INLET
STRAW BALE INLET PROTECTION

SEPTEMBER 2012

STANDARD DRAWING NO. E 205-TECI-06

RICHARD L. VanCLEAVE
REGISTERED
No. 9750
STATE OF INDIANA
PROFESSIONAL ENGINEER

/s/ Richard L. VanCleave 09/04/12
SUPERVISOR, ROADWAY STANDARDS DATE

/s/ Mark A. Miller 09/04/12
CHIEF ENGINEER DATE

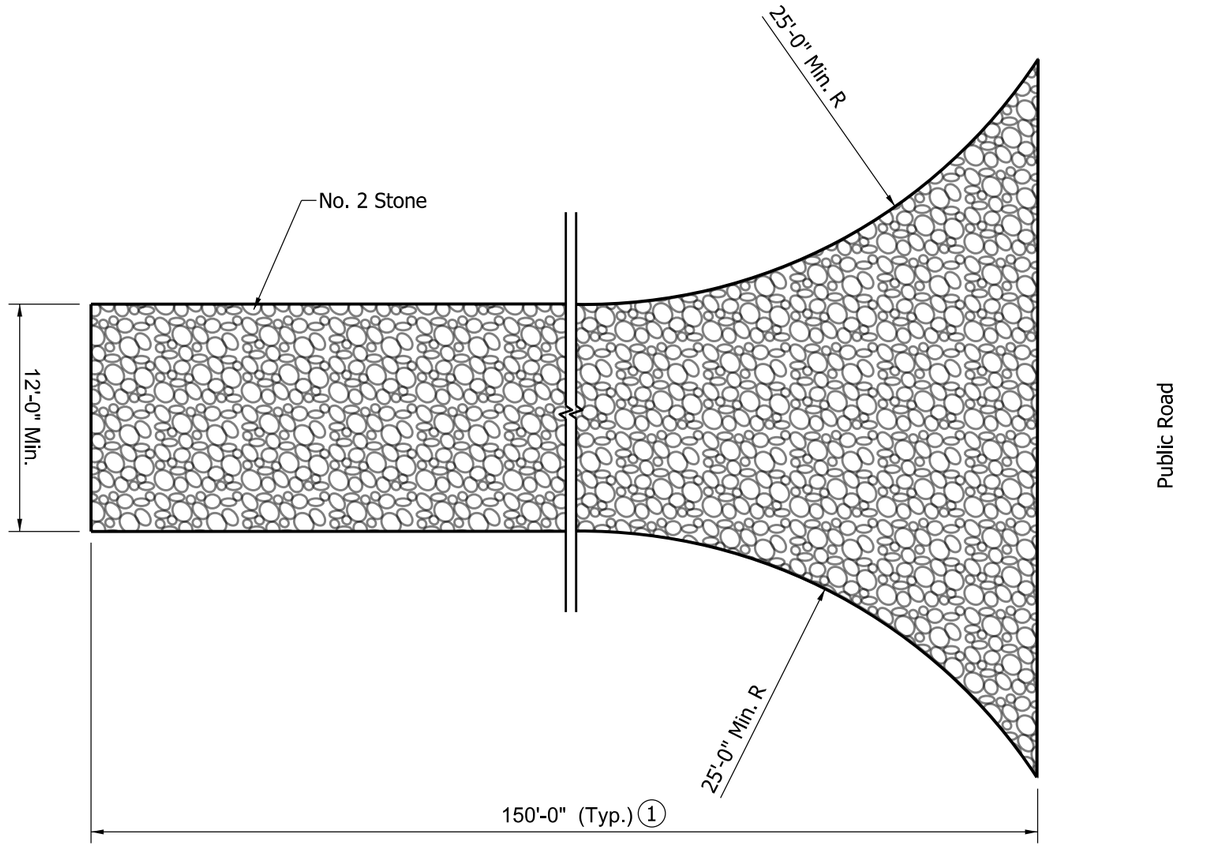

PLAN VIEW

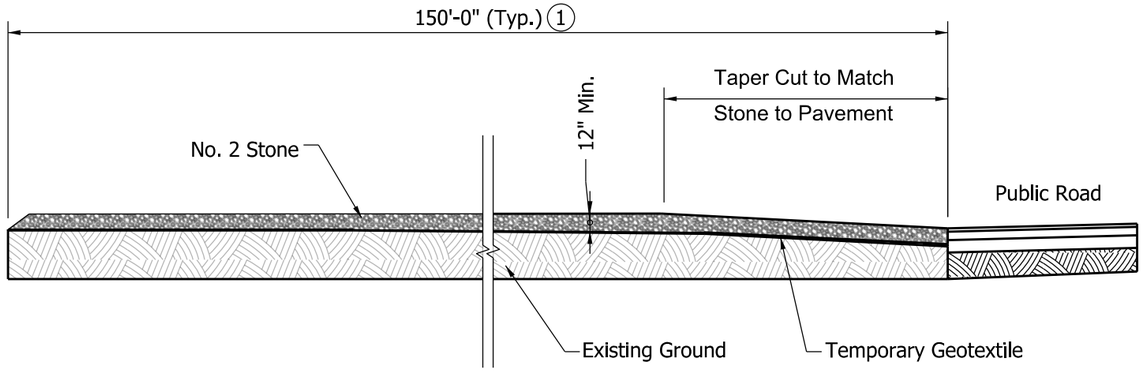

PROFILE VIEW

NOTE:

1. May be reduced as justified by site conditions, but shall not be less than 50 ft.

INDIANA DEPARTMENT OF TRANSPORTATION

TEMPORARY EROSION CONTROL PERIMETER CONSTRUCTION ENTRANCE

SEPTEMBER 2013

STANDARD DRAWING NO. E 205-TECP-01

RICHARD L. VanCLEAVE REGISTERED No. 9750 STATE OF INDIANA PROFESSIONAL ENGINEER

/s/ Richard L. VanCleave 06/12/13
DESIGN STANDARDS ENGINEER DATE

/s/ Mark A. Miller 06/13/13
CHIEF ENGINEER DATE

NOTES:

1. Dimension can vary based on right of way availability. Silt fence shall be placed as close as possible to edge of construction limits.
2. Silt fence may be placed by plowing if minimum embedment of 8 in. is maintained.

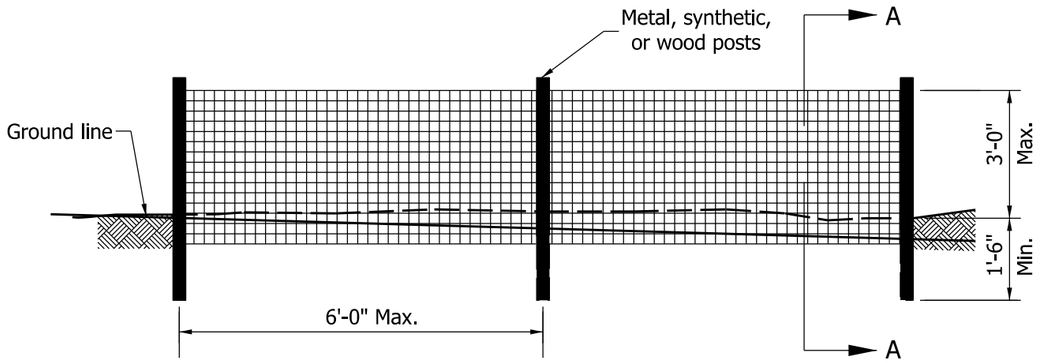

SILT FENCE ELEVATION

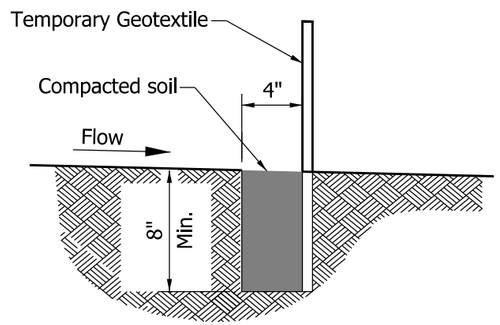

SECTION A-A

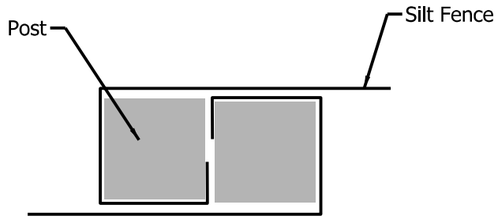

JOINT DETAIL
PLAN VIEW

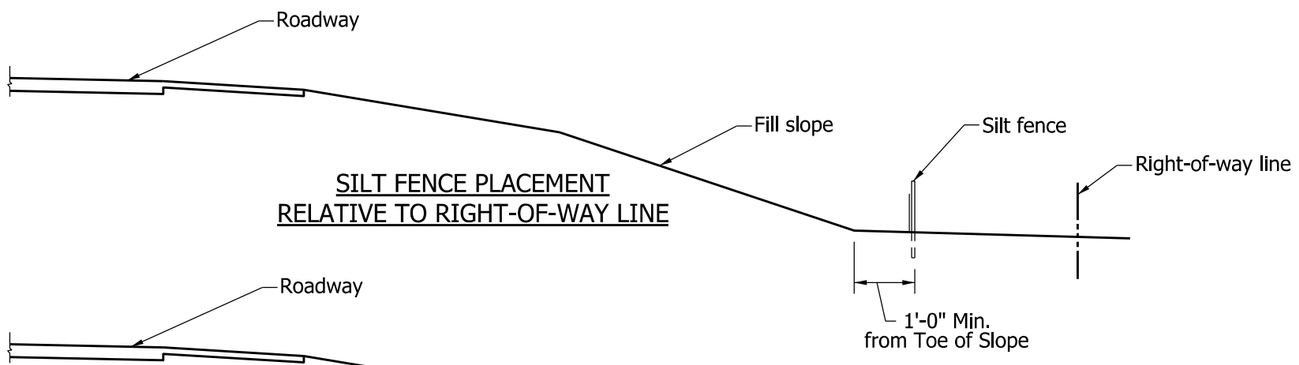

SILT FENCE PLACEMENT
RELATIVE TO RIGHT-OF-WAY LINE

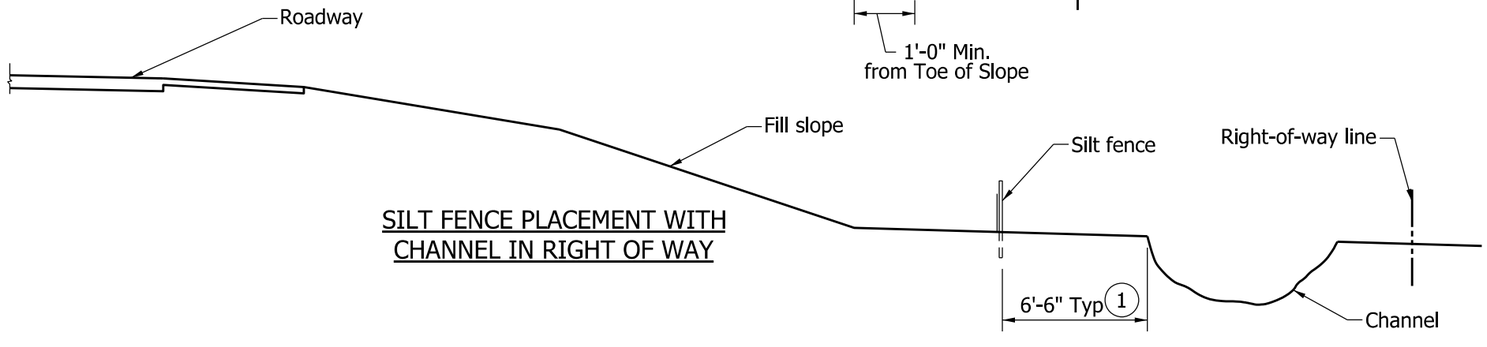

SILT FENCE PLACEMENT WITH
CHANNEL IN RIGHT OF WAY

INDIANA DEPARTMENT OF TRANSPORTATION

TEMPORARY
SILT FENCE

SEPTEMBER 2012

STANDARD DRAWING NO. E 205-TECP-02

RICHARD L. VanCLEAVE
REGISTERED
No. 9750
STATE OF INDIANA
PROFESSIONAL ENGINEER

/s/ Richard L. VanCleave 09/04/12
SUPERVISOR, ROADWAY STANDARDS DATE

/s/ Mark A. Miller 09/04/12
CHIEF ENGINEER DATE

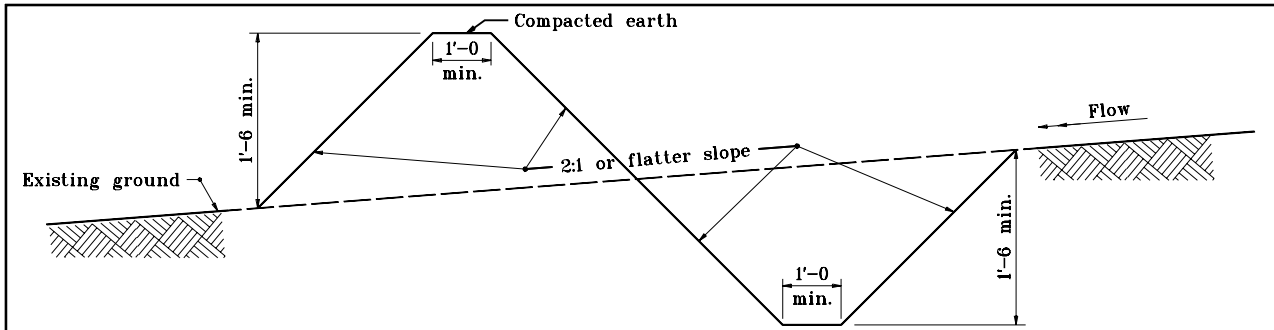

SECTION A–A

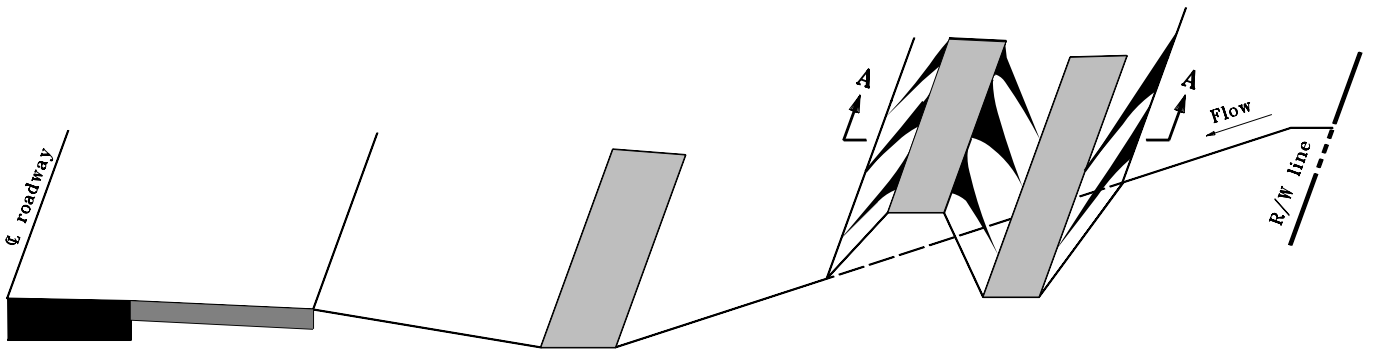

APPLICATION IN CUT SECTION

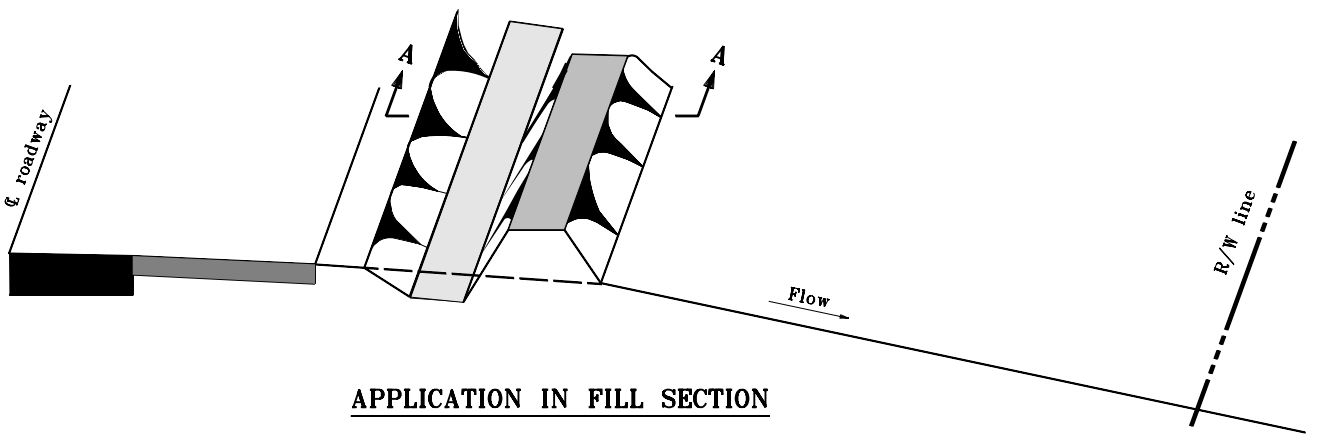

APPLICATION IN FILL SECTION

INDIANA DEPARTMENT OF TRANSPORTATION

TEMPORARY INTERCEPTOR DITCH

MARCH 2002

STANDARD DRAWING NO. **E 205–TECS–01**

RICHARD L. VanCLEAVE REGISTERED No. 9750 STATE OF INDIANA PROFESSIONAL ENGINEER

DESIGN STANDARDS ENGINEER

/s/ Richard L. VanCleave 3–01–02
DESIGN STANDARDS ENGINEER — DATE

/s/ Richard K. Smutzer 3–01–02
CHIEF HIGHWAY ENGINEER — DATE

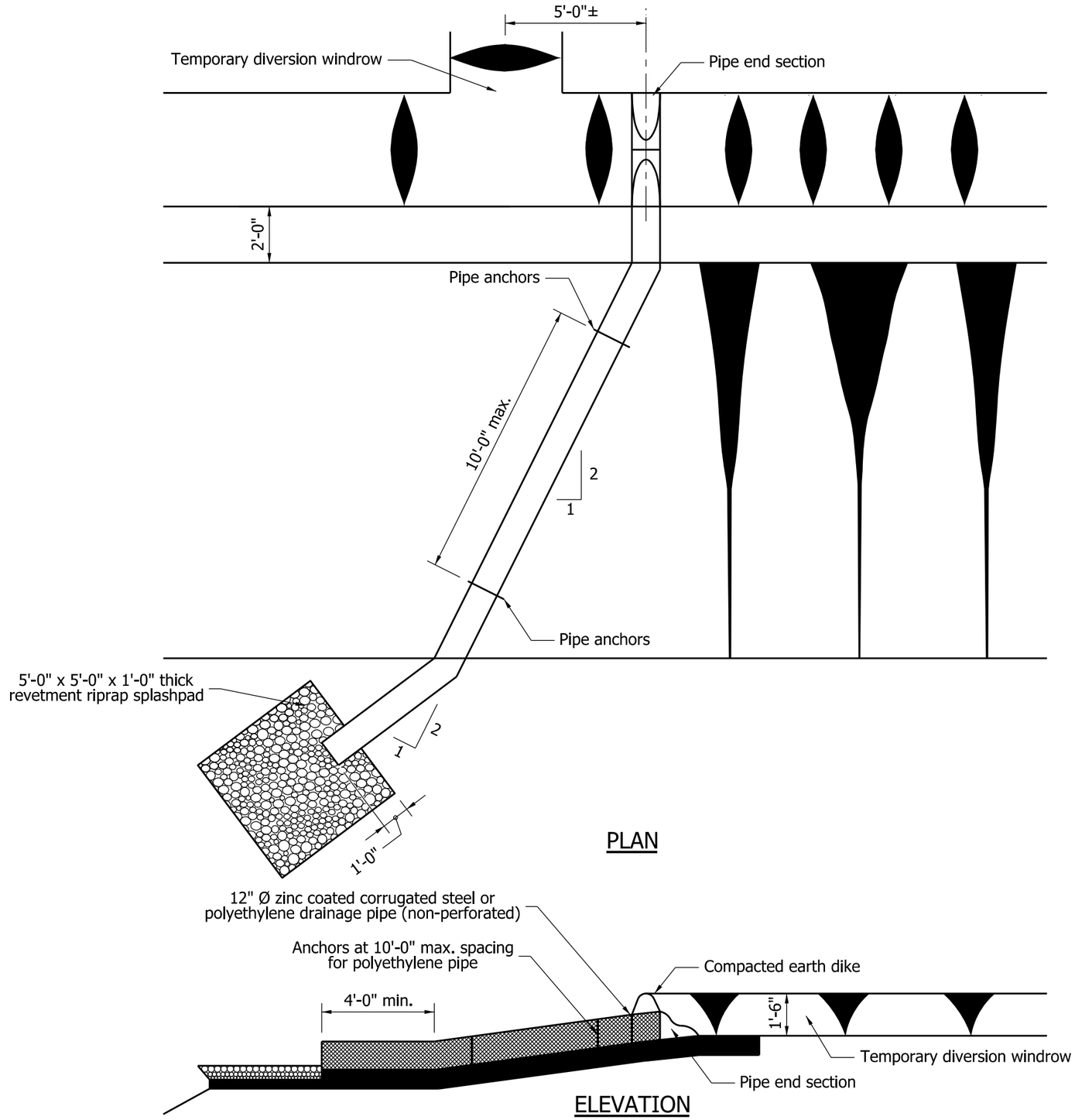

NOTES:

1. Length of slope drain shall be extended as required as fill slope is constructed.
2. The maximum drainage area for a 12" dia. pipe is 1 acre.
3. The required revetment riprap weight is 1.4 tons.

INDIANA DEPARTMENT OF TRANSPORTATION

TEMPORARY SLOPE DRAIN

SEPTEMBER 2010

STANDARD DRAWING NO. E 205-TECS-02

RICHARD L. VanCLEAVE REGISTERED No. 9750 STATE OF INDIANA PROFESSIONAL ENGINEER

DESIGN STANDARDS ENGINEER

/s/ Richard L. VanCleave 09/01/10
DESIGN STANDARDS ENGINEER DATE

/s/ Mark A. Miller 09/01/10
CHIEF HIGHWAY ENGINEER DATE

NOTES:

1. See Standard Drawing E 205-TECS-02 for Notes.

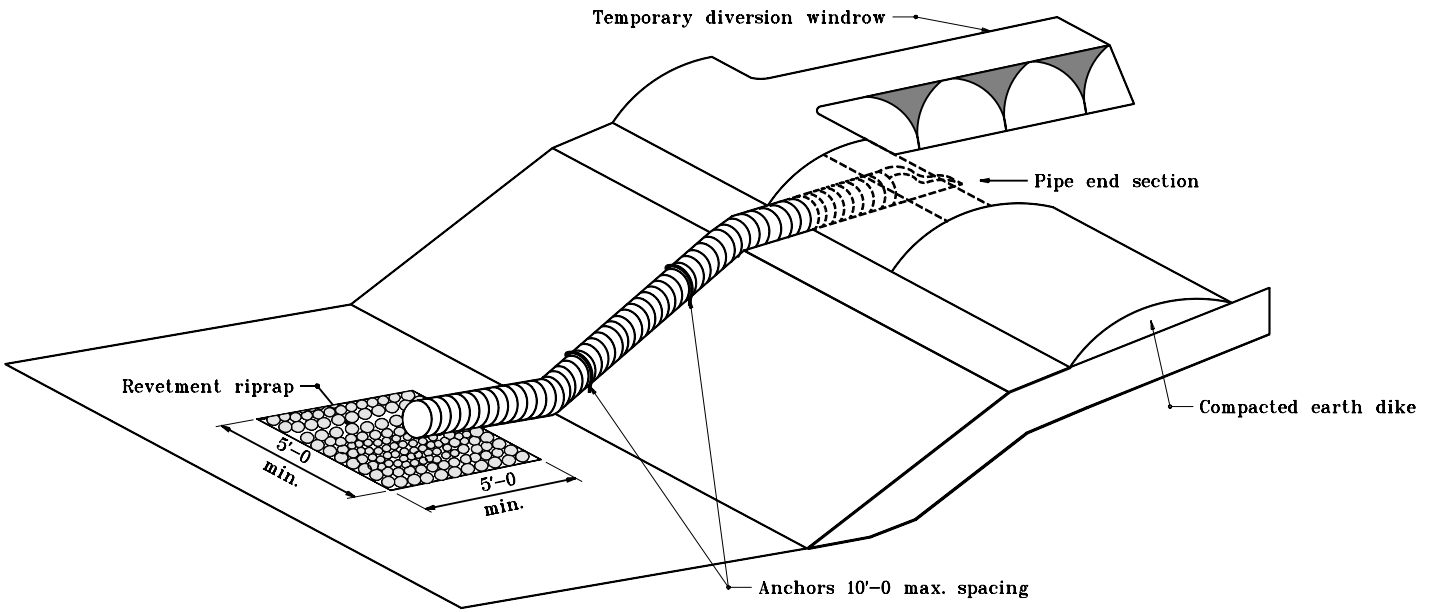

ISOMETRIC

INDIANA DEPARTMENT OF TRANSPORTATION

TEMPORARY SLOPE DRAIN

SEPTEMBER 2001

STANDARD DRAWING NO. **E 205-TECS-03**

RICHARD L. VanCLEAVE REGISTERED No. 9750 STATE OF INDIANA PROFESSIONAL ENGINEER

DESIGN STANDARDS ENGINEER

/s/ Richard L. VanCleave 9-04-01
DESIGN STANDARDS ENGINEER — DATE

/s/ Firooz Zandi 9-04-01
CHIEF HIGHWAY ENGINEER — DATE

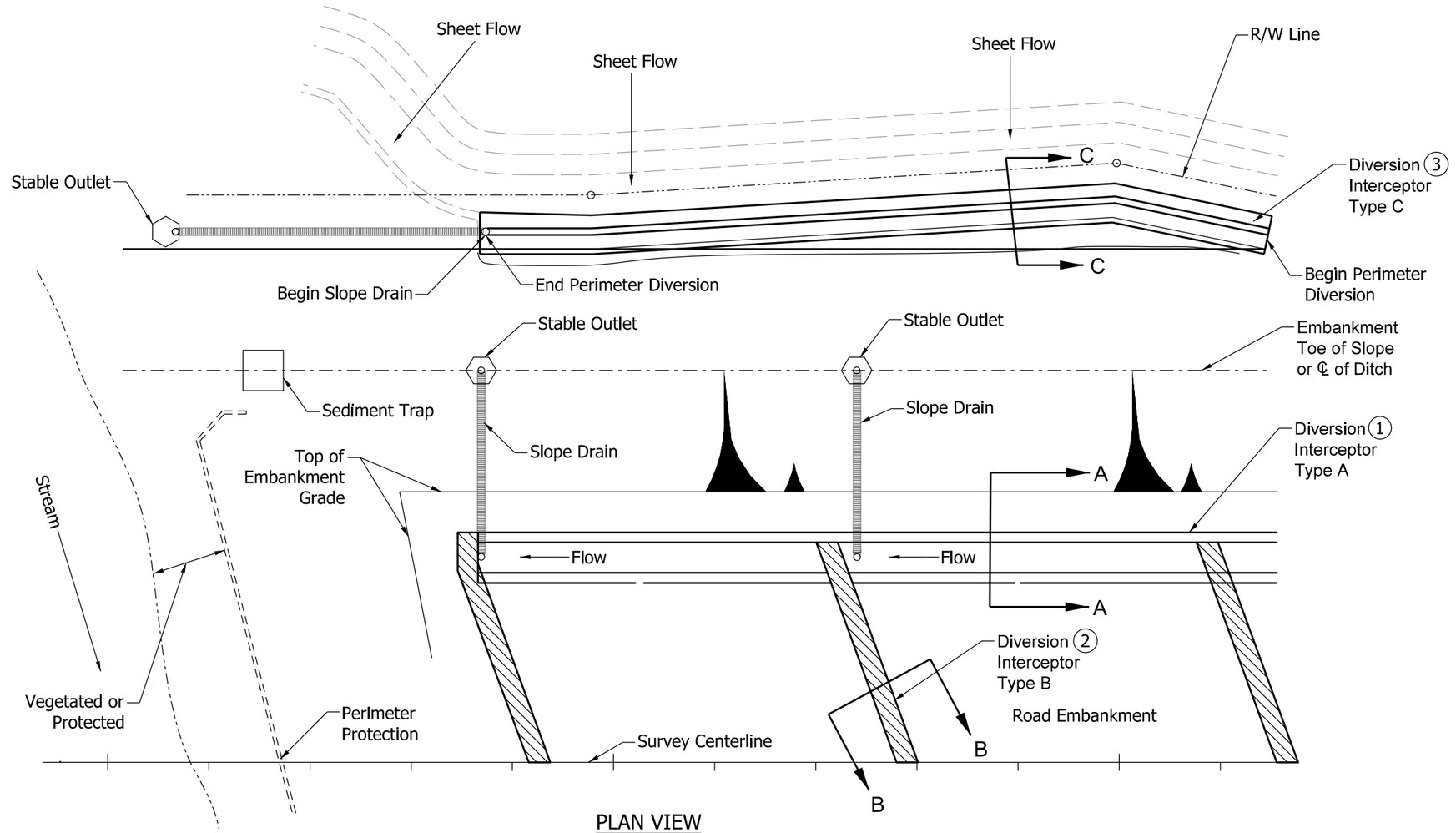

PLAN VIEW
TYPICAL LAYOUTS

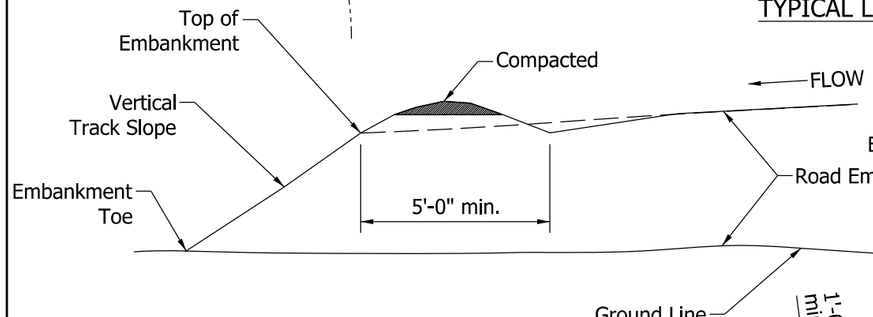

SECTION A-A

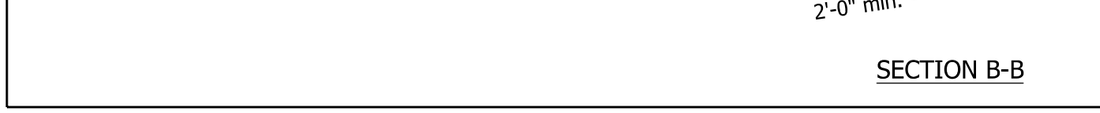

SECTION B-B

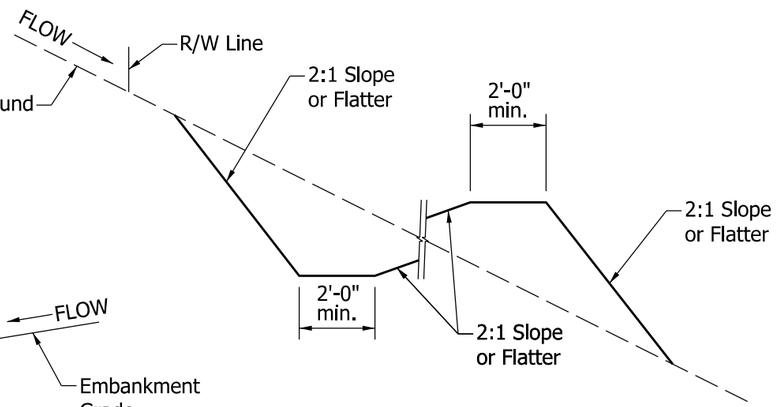

SECTION C-C

NOTES:

1. Diversion Interceptor Type A shall be used to control embankment runoff to slope drains during grading operations.
2. Diversion Interceptor Type B shall be a series of ridges used to divert runoff from long narrow corridor. Maximum length of the ridges shall not exceed 100 ft. Ridges shall be used for dividing grades and haul roads.
3. Diversion Interceptor Type C shall be used to collect offsite runoff before entering the disturbed portion of project site. Maximum allowed runoff captured from offsite drainage area is 5 acres.

INDIANA DEPARTMENT OF TRANSPORTATION

TEMPORARY EROSION CONTROL SLOPE DIVERSION INTERCEPTORS

SEPTEMBER 2012

STANDARD DRAWING NO. E 205-TECS-04

RICHARD L. VanCLEAVE REGISTERED No. 9750 STATE OF INDIANA PROFESSIONAL ENGINEER

/s/ Richard L. VanCleave 09/04/12
SUPERVISOR, ROADWAY STANDARDS DATE

/s/ Mark A. Miller 09/04/12
CHIEF ENGINEER DATE

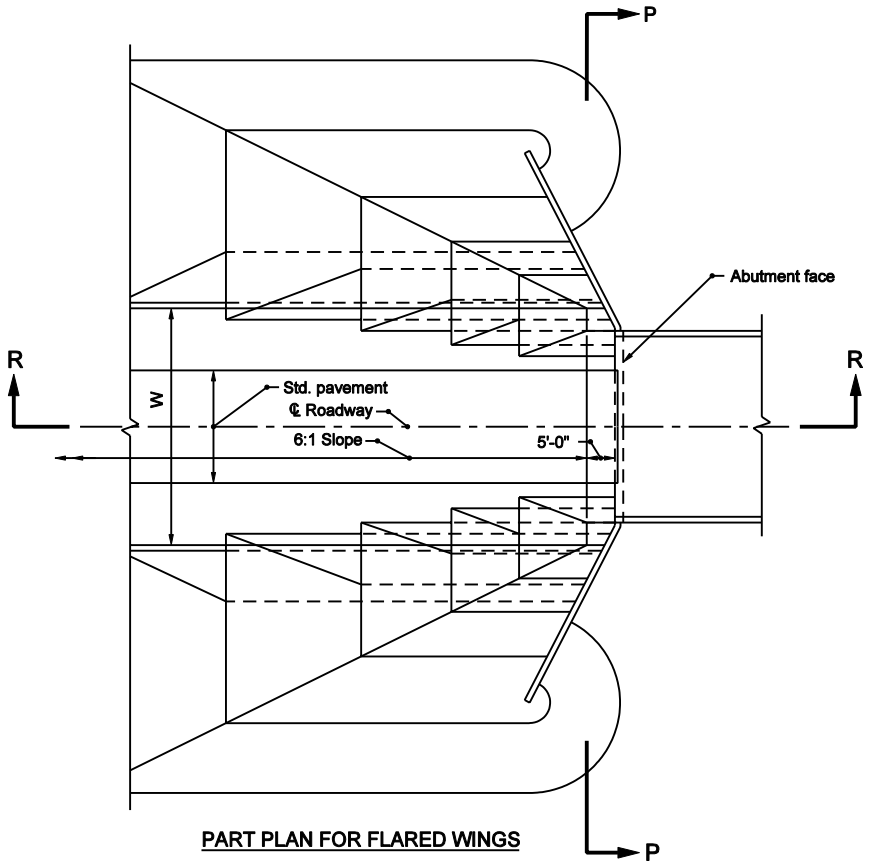

PART PLAN FOR FLARED WINGS

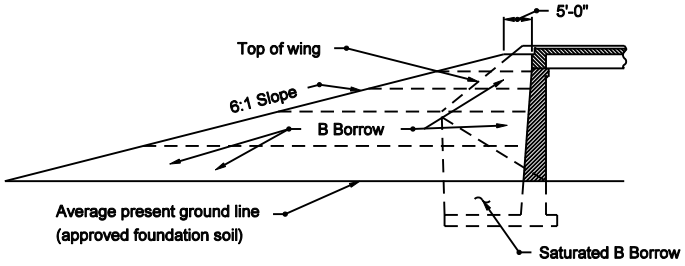

SECTION R-R

NOTES

1. See Standard E 211-BFIL-02 for Section P-P

INDIANA DEPARTMENT OF TRANSPORTATION

PART PLAN FOR FLARED WINGS

MARCH 2003

STANDARD DRAWING NO. E 211-BFIL-01

RICHARD L. VanCLEAVE REGISTERED No. 9750 STATE OF INDIANA PROFESSIONAL ENGINEER

DESIGN STANDARDS ENGINEER

/s/ Richard L. VanCleave 3-03-03
DESIGN STANDARDS ENGINEER DATE

/s/ Richard K. Smutzer 3-03-03
CHIEF HIGHWAY ENGINEER DATE

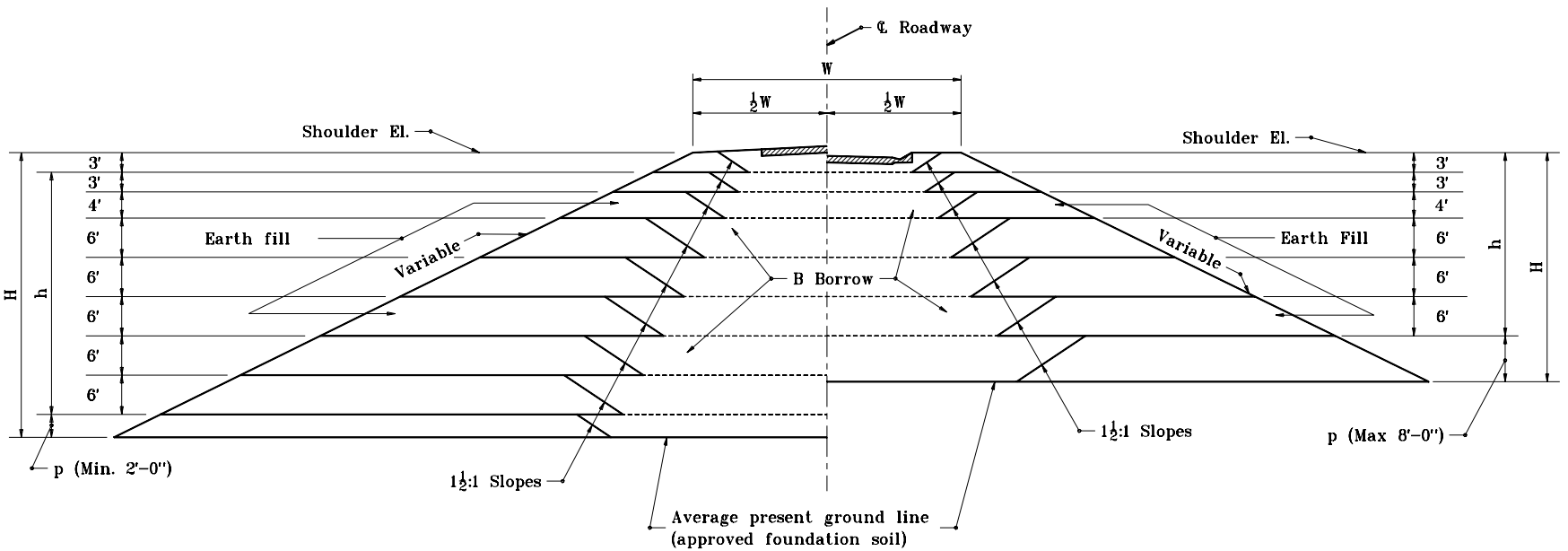

TYPICAL SECTION P–P

INDIANA DEPARTMENT OF TRANSPORTATION

FLARED WINGS
TYPICAL CROSS SECTION

SEPTEMBER 1994

STANDARD DRAWING NO. **E 211-BFIL-02**

ANTHONY L. UREMOVICH REGISTERED No. 18095 STATE OF INDIANA PROFESSIONAL ENGINEER

DESIGN STANDARDS ENGINEER

DETAILS PLACED IN THIS FORMAT	11-15-99
/s/ Anthony L. Uremovich	11-15-99
DESIGN STANDARDS ENGINEER	DATE
/s/ Firooz Zandi	11-15-99
CHIEF HIGHWAY ENGINEER	DATE
ORIGINALLY APPROVED	9-30-94

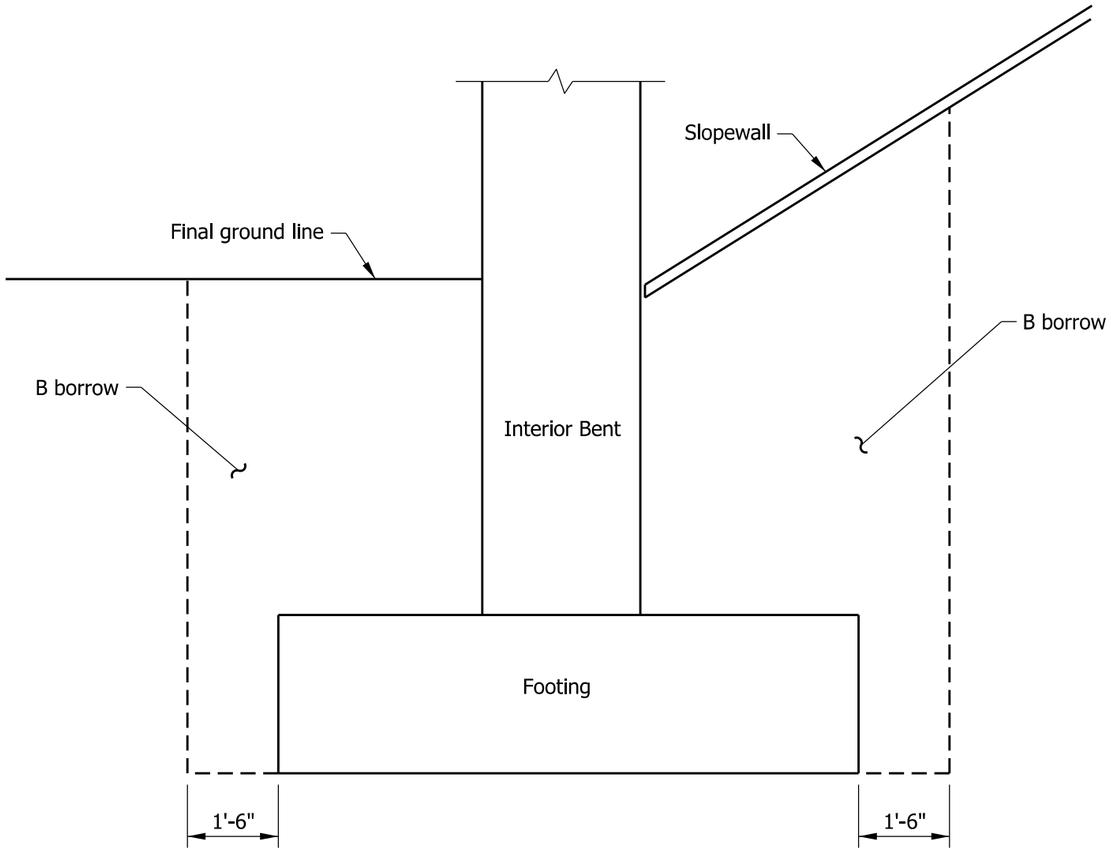

ADJACENT TO RAILROAD OR HIGHWAY

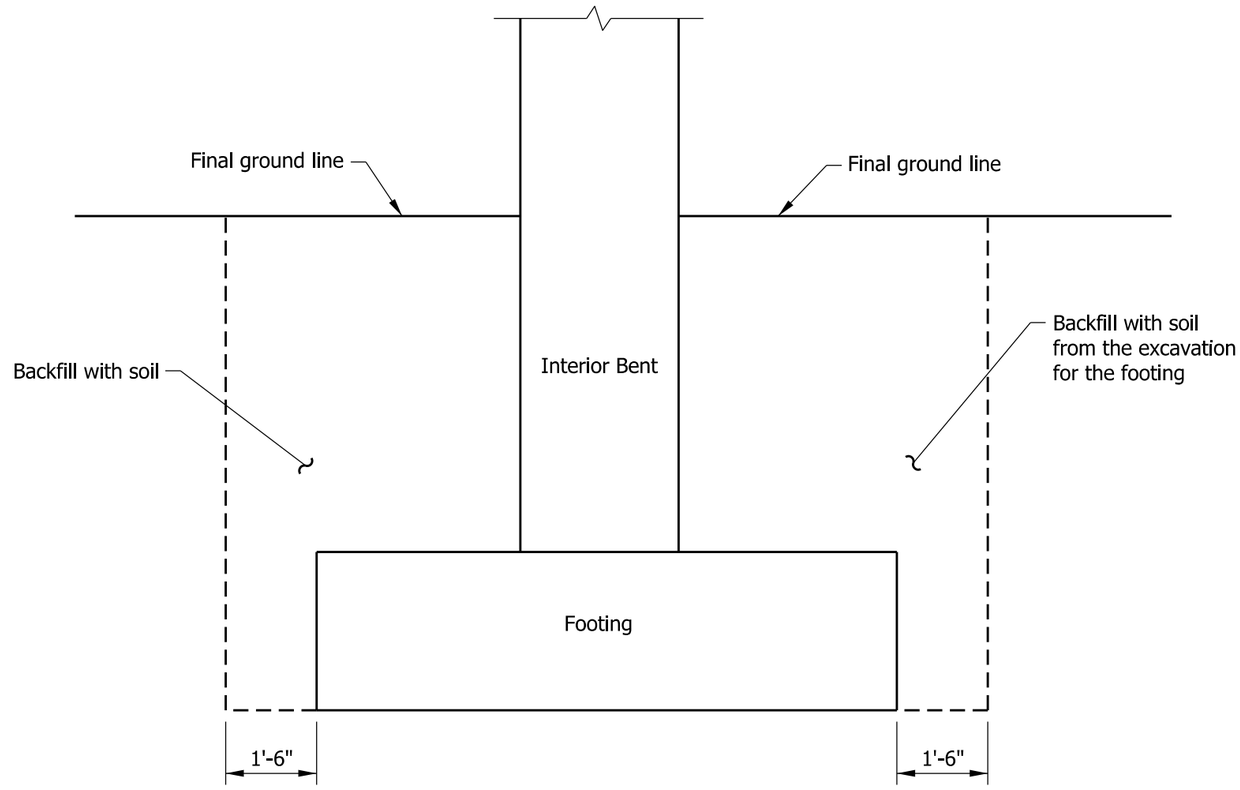

BRIDGE OVER WATERWAY

INDIANA DEPARTMENT OF TRANSPORTATION

BACKFILL PLACEMENT
INTERIOR BENT OR PIER

SEPTEMBER 2003

STANDARD DRAWING NO. E 211-BFIL-03

RICHARD L. VanCLEAVE
REGISTERED
No. 9750
STATE OF INDIANA
PROFESSIONAL ENGINEER

DETAILS PLACED IN THIS FORMAT 09/04/12

/s/ Richard L. VanCleave *09/04/12*

SUPERVISOR, ROADWAY STANDARDS DATE

/s/ Mark A. Miller *09/04/12*

CHIEF ENGINEER DATE

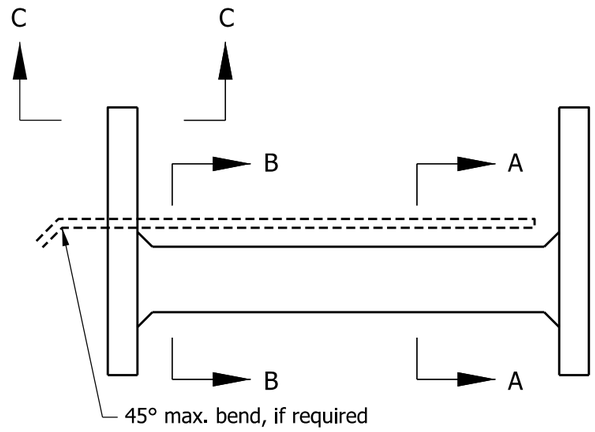

PLAN - END BENT

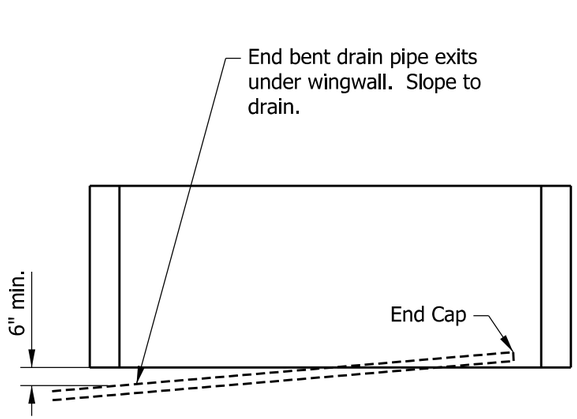

ELEVATION - END BENT

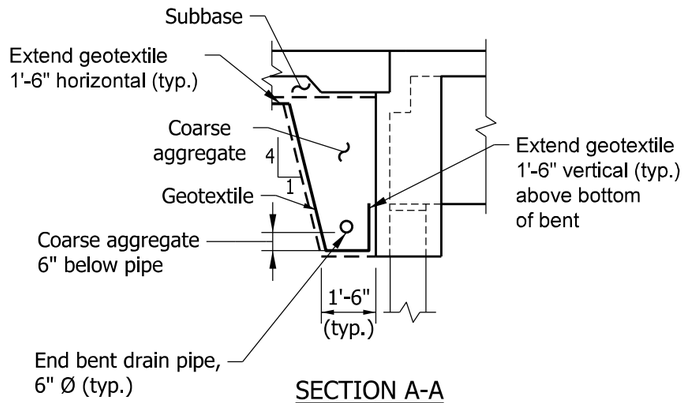

SECTION A-A

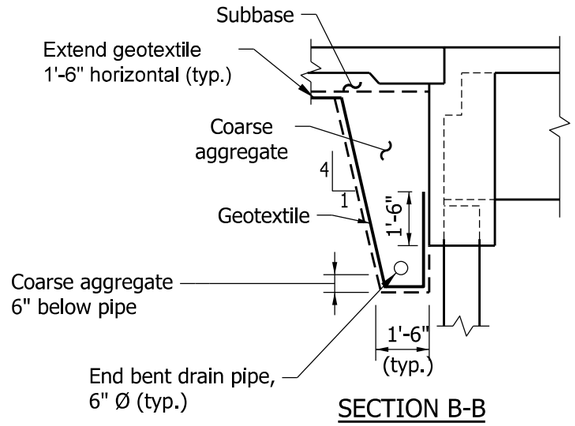

SECTION B-B

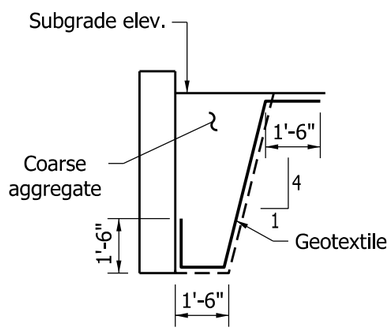

SECTION C-C

INDIANA DEPARTMENT OF TRANSPORTATION

BACKFILL PLACEMENT BEHIND END BENT BEAM OR GIRDER STRUCTURE

SEPTEMBER 2003

STANDARD DRAWING NO. E 211-BFIL-04

RICHARD L. VanCLEAVE REGISTERED No. 9750 STATE OF INDIANA PROFESSIONAL ENGINEER

DETAILS PLACED IN THIS FORMAT 09/04/12

/s/ Richard L. VanCleave *09/04/12*

SUPERVISOR, ROADWAY STANDARDS DATE

/s/ Mark A. Miller *09/04/12*

CHIEF ENGINEER DATE

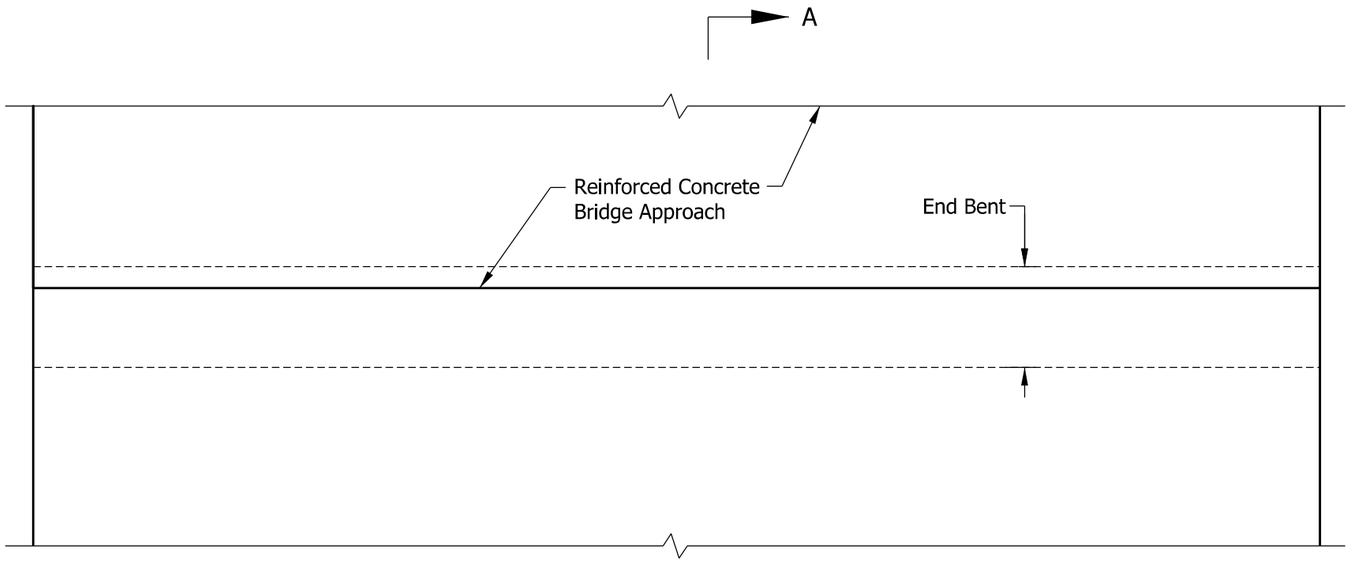

PLAN - END BENT

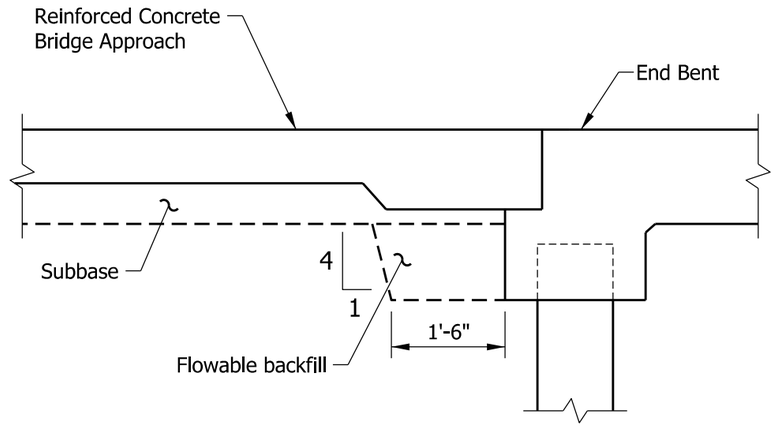

SECTION A-A

INDIANA DEPARTMENT OF TRANSPORTATION

BACKFILL PLACEMENT BEHIND END BENT REINFORCED-CONCRETE SLAB BRIDGE

SEPTEMBER 2004

STANDARD DRAWING NO. E 211-BFIL-05

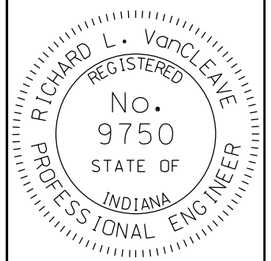

DETAILS PLACED IN THIS FORMAT 09/04/12

/s/ Richard L. VanCleave 09/04/12

SUPERVISOR, ROADWAY STANDARDS DATE

/s/ Mark A. Miller 09/04/12

CHIEF ENGINEER DATE

GENERAL NOTES

1. This section shall be used when the existing shoulder width is less than 3 ft. or the slope is steeper than 12.5%.
2. This section shall be used when the existing shoulder slope is flatter than 12.5%.

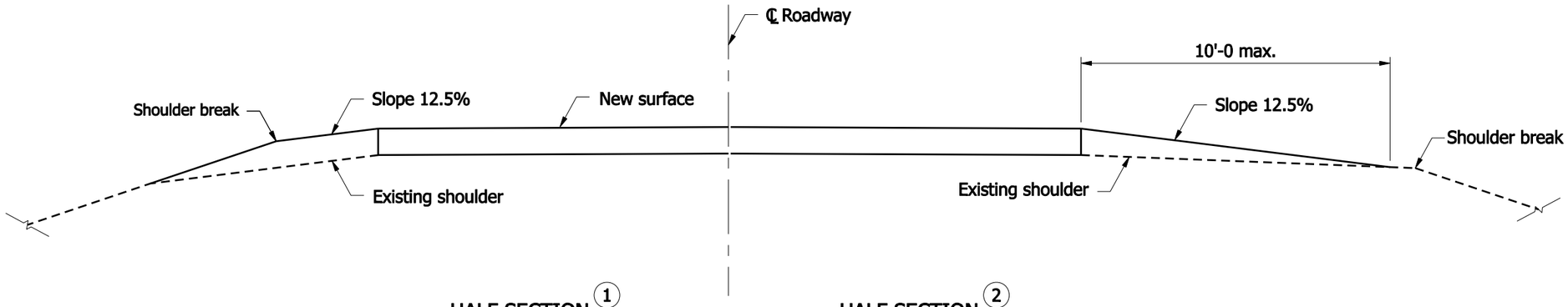

HALF SECTION (1) HALF SECTION (2)

TYPICAL SECTION FOR SHOULDER TREATMENT

INDIANA DEPARTMENT OF TRANSPORTATION

SHOULDER TREATMENT FOR RESURFACING WORK

SEPTEMBER 2007

STANDARD DRAWING NO. E 303-STRW-01

RICHARD L. VanCLEAVE
REGISTERED
No. 9750
STATE OF INDIANA
PROFESSIONAL ENGINEER

DESIGN STANDARDS ENGINEER

/s/ Richard L. VanCleave 09/04/07
DESIGN STANDARDS ENGINEER DATE

/s/ Mark A.Miller 09/04/07
CHIEF HIGHWAY ENGINEER DATE

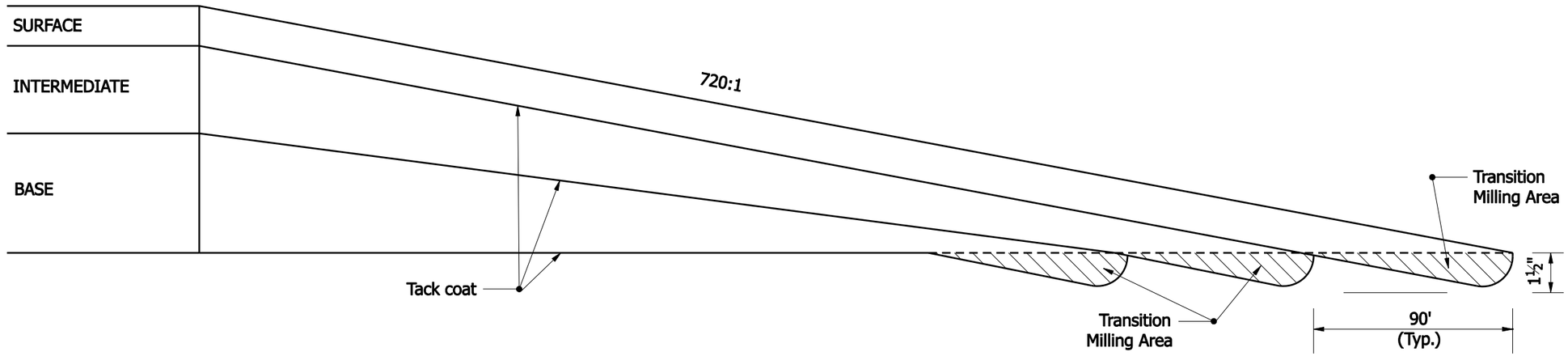

INDIANA DEPARTMENT OF TRANSPORTATION

HMA-PAVEMENT WEDGING AND TRANSITION MILLING

SEPTEMBER 2007

STANDARD DRAWING NO. E 306-TMPT-01

RICHARD L. VanCLEAVE
REGISTERED
No. 9750
STATE OF INDIANA
PROFESSIONAL ENGINEER

DESIGN STANDARDS ENGINEER

/s/ Richard L. VanCleave 9/4/07
DESIGN STANDARDS ENGINEER — DATE

/s/ Mark A. Miller 9/4/07
CHIEF HIGHWAY ENGINEER — DATE

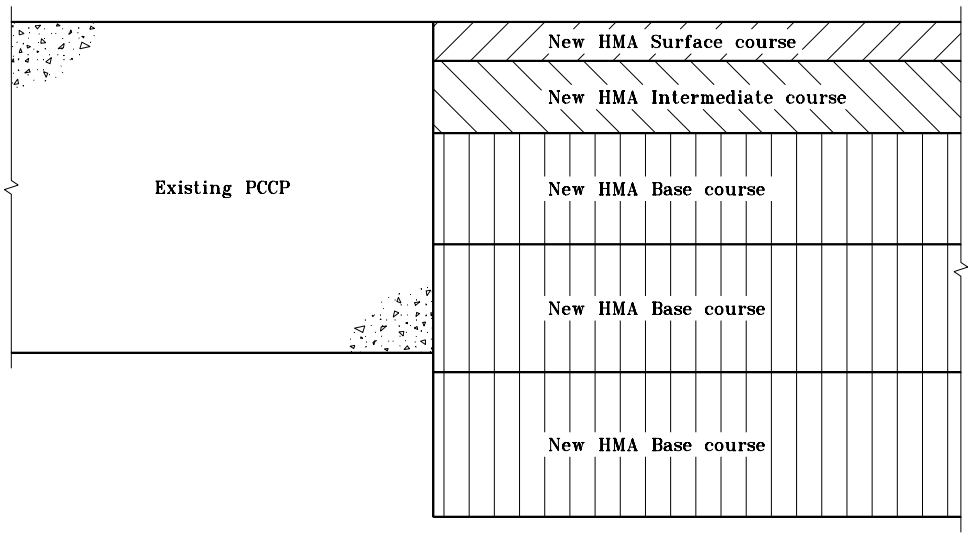

EXISTING PCCP TO NEW HMA PAVEMENT

INDIANA DEPARTMENT OF TRANSPORTATION

PAVEMENT TYPE TRANSITION

SEPTEMBER 1999

STANDARD DRAWING NO. **E 400-PTRN-01**

ANTHONY L. UREMOVICH REGISTERED No. 18095 STATE OF INDIANA PROFESSIONAL ENGINEER

DESIGN STANDARDS ENGINEER

/s/ Anthony L. Uremovich 9-01-99
DESIGN STANDARDS ENGINEER — DATE

/s/ Donald W. Lucas 9-01-99
CHIEF HIGHWAY ENGINEER — DATE

GENERAL NOTES

(1) Required additional length of L above the 600' minimum shall be added to the length of this parallel lane segment. (Example: If required L = 720', then this parallel lane segment length = 420'). See tables on Standard Drawing E 401-REBS-04.

(2) Ear construction type A: 2 lines of #5 bars required (Est. weight = 255 lb). Transverse sawed and sealed joint, in line with pavement contraction joint, shall extend through ear construction. The #5 bars shall be discontinued at such joints. See Detail B-B.

3. See Standard Drawing E 401-REBS-03 for Section B-B.

CURVE DATA

△ = 3°00'00"
R = 2864.79'
T = 75.02'
L = 150.0'
E = 0.98'

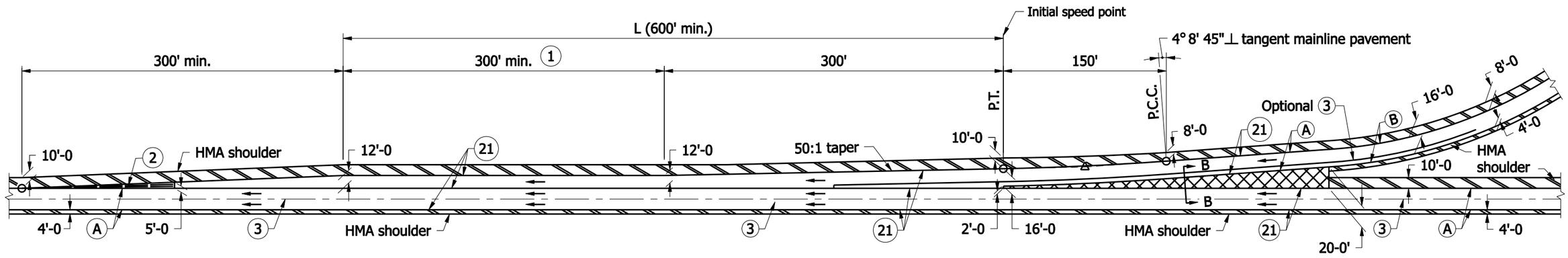

NOTES :

LEGEND

(A) Pavement type and thickness as specified for the mainline.
(B) Pavement type and thickness as specified for ramps.
(3) Longitudinal joint
(21) Longitudinal construction joint
HMA shoulder (Thickness of mainline pavement)
HMA shoulder (Thickness as specified on Typical Sections)

ENTRANCE

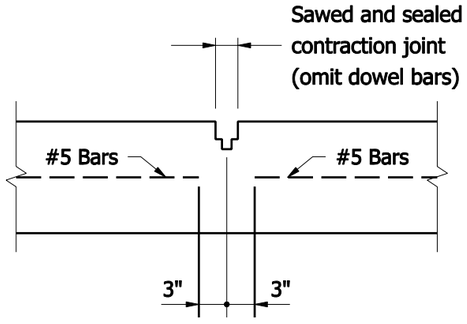

DETAIL B-B

INDIANA DEPARTMENT OF TRANSPORTATION

RAMP ENTRANCE TERMINAL HMA SHOULDER

SEPTEMBER 2008

STANDARD DRAWING NO. E 401- REBS-01

RICHARD L. VanCLEAVE REGISTERED No. 9750 STATE OF INDIANA PROFESSIONAL ENGINEER

DESIGN STANDARDS ENGINEER

/s/ Richard L. VanCleave 09/02/08
DESIGN STANDARDS ENGINEER DATE

/s/ Mark A. Miller 09/02/08
CHIEF HIGHWAY ENGINEER DATE

GENERAL NOTES

(1) Ear construction type A:
2 lines of #5 bars required (Est. wt. = 86 lb). Transverse sawed and sealed joint, in line with pavement contraction joint, shall extend through ear construction. The #5 bars shall be discontinued at such joints. See Detail B–B on Standard Drawing E 401–REBS–01.

2. See Standard Drawing E 401–REBS–03 for Section A–A.

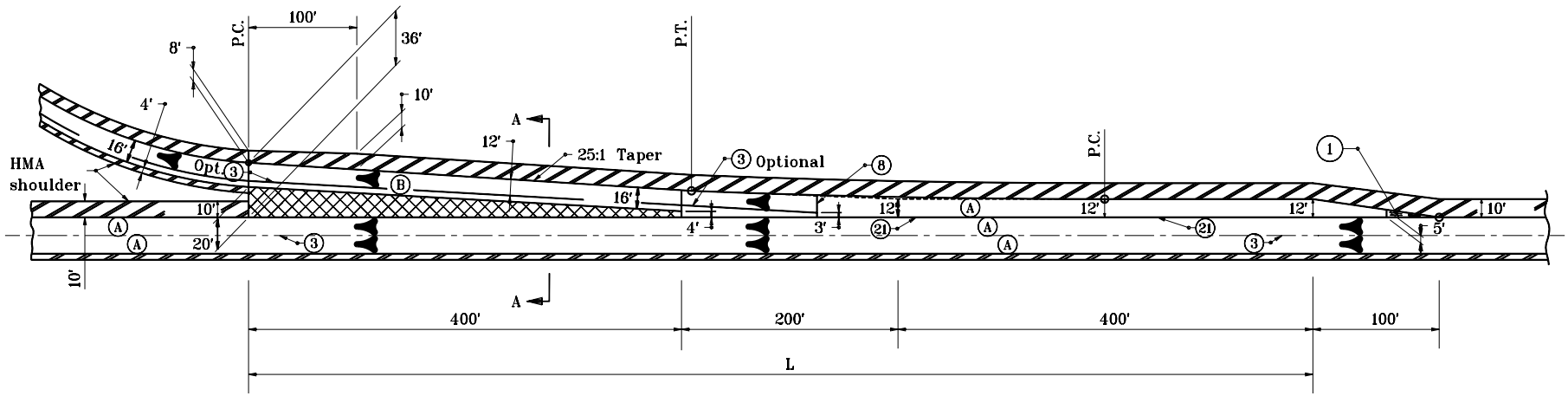

EXIT

LEGEND

(A) Pavement type and thickness as specified for the mainline.
(B) Pavement type and thickness as specified for ramps.
(3) Longitudinal Joint (Optional where indicated)
(21) Longitudinal Construction Joint
HMA Shoulder (Thickness of mainline pavement)
HMA Shoulder (Thickness as specified on Typical Sections)

CURVE DATA

△ = 2° 17' 26"
T = 190.91'
L = 381.76'
E = 1.91'
R = 9549.30'

INDIANA DEPARTMENT OF TRANSPORTATION

RAMP EXIT TERMINAL HMA SHOULDER

JANUARY 1999

STANDARD DRAWING NO. **E 401–REBS–02**

ANTHONY L. URENOVICH REGISTERED No. 18095 STATE OF INDIANA PROFESSIONAL ENGINEER

DESIGN STANDARDS ENGINEER

DETAILS PLACED IN THIS FORMAT	11-15-99
/s/ Anthony L. Uremovich	11-15-99
DESIGN STANDARDS ENGINEER	DATE
/s/ Firooz Zandi	11-15-99
CHIEF HIGHWAY ENGINEER	DATE
ORIGINALLY APPROVED	1-04-99

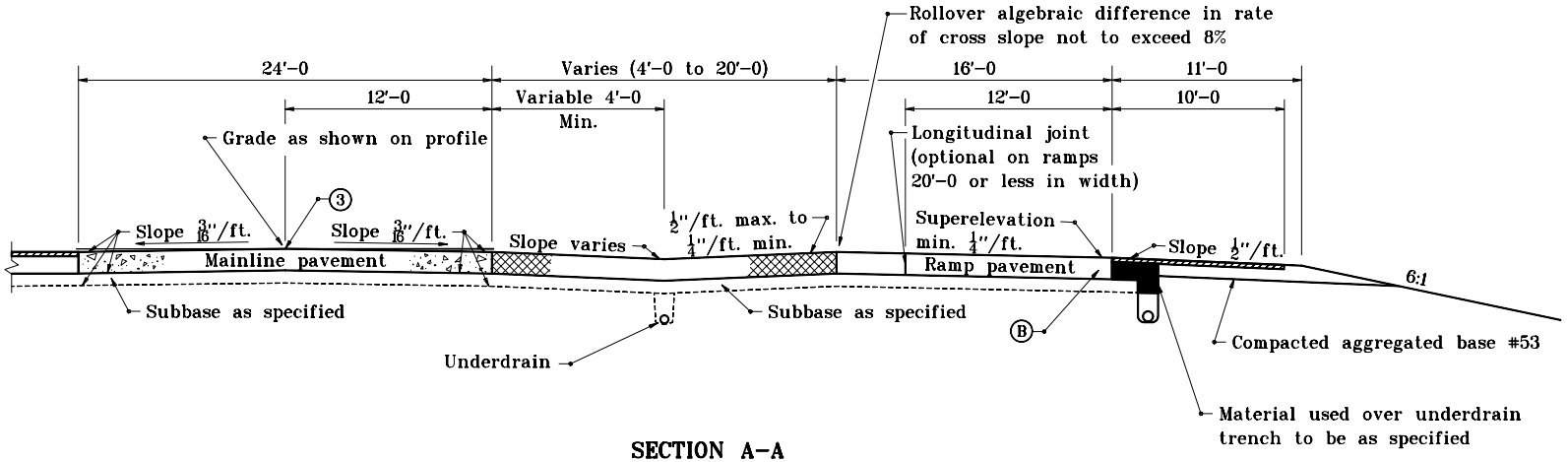

SECTION A-A

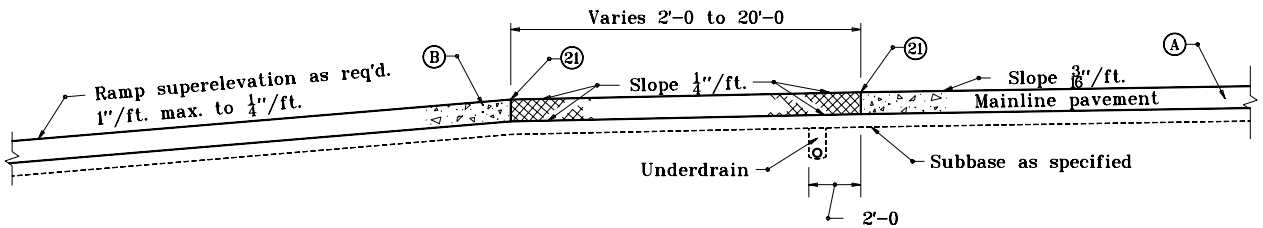

SECTION B-B

LEGEND

- (A) Pavement type and thickness as specified for the mainline.
- (B) Pavement type and thickness as specified for ramps.
- (3) Longitudinal joint
- (21) Longitudinal construction joint
- HMA shoulder (Thickness of mainline pavement)

INDIANA DEPARTMENT OF TRANSPORTATION

RAMP CROSS SECTIONS HMA SHOULDER

SEPTEMBER 2000

STANDARD DRAWING NO. **E 401-REBS-03**

ANTHONY L. UREMOVICH REGISTERED No. 18095 STATE OF INDIANA PROFESSIONAL ENGINEER

DESIGN STANDARDS ENGINEER

/s/ Anthony L. Uremovich 9-01-00
DESIGN STANDARDS ENGINEER — DATE

/s/ Firooz Zandi 9-01-00
CHIEF HIGHWAY ENGINEER — DATE

HIGHWAY		ACCELERATION LENGTH, L (ft)								
		ENTRANCE CURVE DESIGN SPEED (mph)								
		STOP CONDITION	15	20	25	30	35	40	45	50
DESIGN SPEED (mph)	SPEED REACHED (mph)	INTIAL SPEED (mph)								
		0	14	18	22	25	30	36	40	44
30	23	190	—	—	—	—	—	—	—	—
40	31	380	320	250	220	140	—	—	—	—
50	39	760	700	630	580	500	380	160	—	—
60	47	1170	1120	1070	1000	910	800	590	400	170
70	53	1590	1540	1500	1410	1330	1230	1010	830	580

MINIMUM ACCELERATION LENGTHS FOR ENTRANCE TERMINALS
(Flat grades of 2 percent or less)

TABLE A

DESIGN SPEED (mph)	ACCELERATION LANE Ratio of length of grade to length of level for (1)				
	Design speed of turning roadway curve (mph)				
	20	30	40	50	ALL SPEEDS
	2.01 to 4 percent upgrade				2.01 to 4 percent downgrade
40	1.3	1.3	—	—	0.7
50	1.3	1.4	1.4	—	0.65
60	1.4	1.5	1.5	1.6	0.6
70	1.5	1.6	1.7	1.8	0.6
	4.01 to 6 percent upgrade				4.01 to 6 percent downgrade
40	1.5	1.5	—	—	0.6
50	1.5	1.7	2.2	—	0.55
60	1.7	1.9	2.2	2.2	0.5
70	2.0	2.2	2.6	3.0	0.5

(1) Ratio from this table multiplied by length in Table A gives length of speed change lane on grade.

RATIO OF LENGTH OF SPEED-CHANGE LANE ON GRADE TO LENGTH OF LEVEL ACCELERATION LANE

TABLE B

INDIANA DEPARTMENT OF TRANSPORTATION

RAMP TERMINAL TABLES

JUNE 1996

STANDARD DRAWING NO. E 401-REBS-04

ANTHONY L. UREMOVICH REGISTERED No. 18095 STATE OF INDIANA PROFESSIONAL ENGINEER

DESIGN STANDARDS ENGINEER

DETAILS PLACED IN THIS FORMAT 11-15-99

/s/ Anthony L. Uremovich 11-15-99
DESIGN STANDARDS ENGINEER DATE

/s/ Firooz Zandi 11-15-99
CHIEF HIGHWAY ENGINEER DATE

ORIGINALLY APPROVED 6-03-96

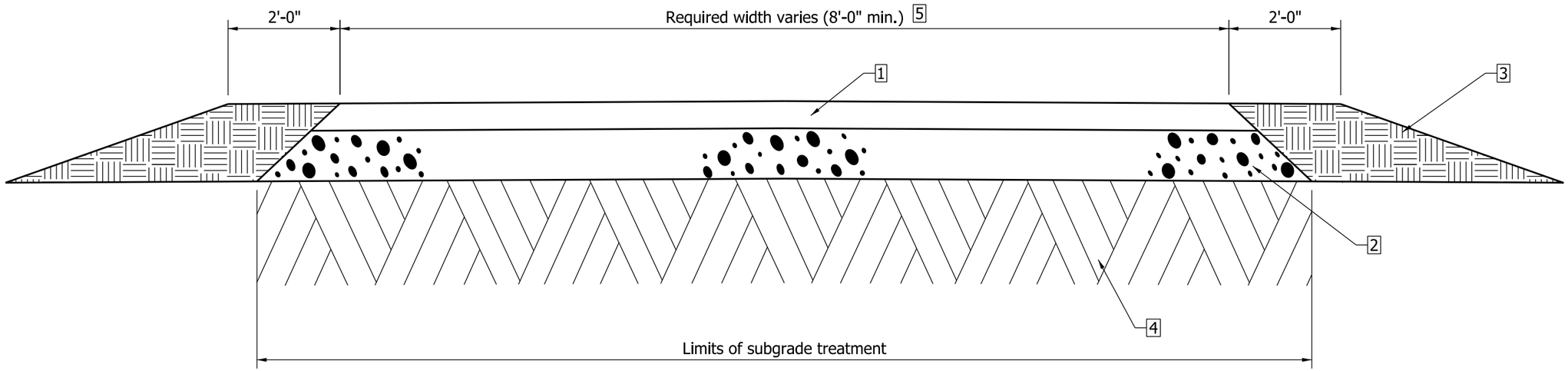

LEGEND

1 140 lb/yd² HMA Surface Type A, on
220 lb/yd² HMA Intermediate, Type A

2 6" Compacted Aggregate No.53, Base

3 Earth Shoulder

4 Subgrade Treatment (6" Coarse Aggregate No.53)

5 Width and Cross Slope as required

INDIANA DEPARTMENT OF TRANSPORTATION

HMA NONMOTORIZED-VEHICLE-USE FACILITY PAVEMENT SECTION

SEPTEMBER 2010

STANDARD DRAWING NO. E 402-NVUF-01

RICHARD L. VanCLEAVE
REGISTERED
No. 9750
STATE OF INDIANA
PROFESSIONAL ENGINEER

DESIGN STANDARDS ENGINEER

/s/ Richard L. VanCleave *09/01/10*
DESIGN STANDARDS ENGINEER DATE

/s/ Mark A. Miller *09/01/10*
CHIEF HIGHWAY ENGINEER DATE

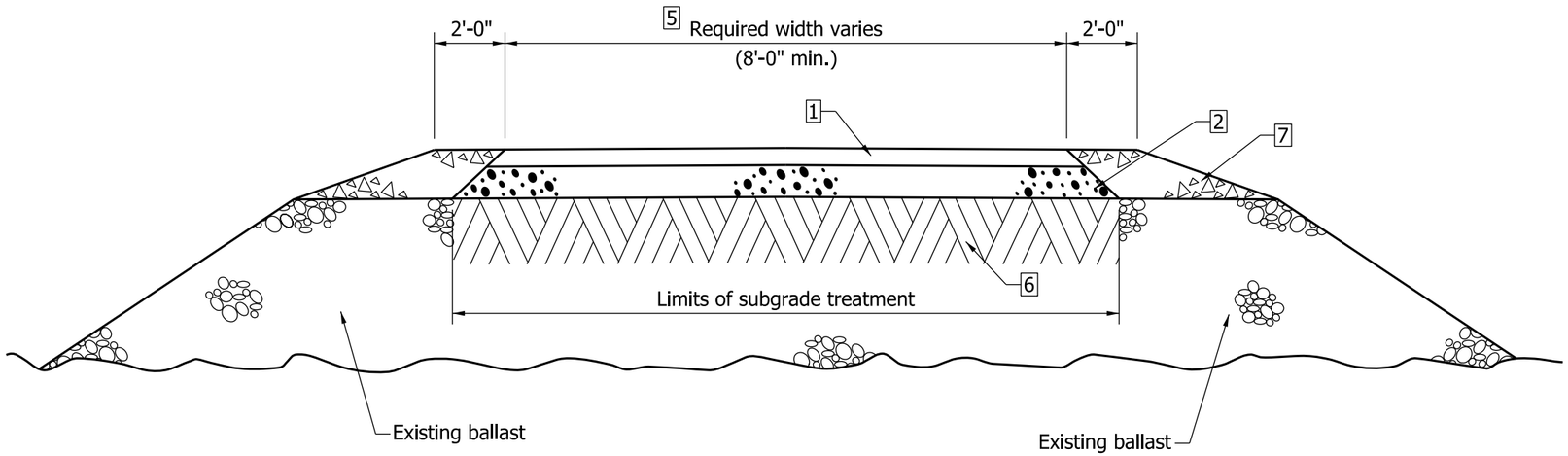

LEGEND:

1 140 lb/yd² HMA Surface Type A, on
220 lb/yd² HMA Intermediate, Type A

2 6" Compacted Aggregate No.53, Base

5 Width and Cross Slope as required

6 Subgrade Treatment (3" subgrade excavated
and replaced with 3" Coarse Aggregate No.53)

7 Variable-depth Compacted Aggregate No.53 or No.73

INDIANA DEPARTMENT OF TRANSPORTATION

HMA NONMOTORIZED-VEHICLE-USE FACILITY
PAVEMENT SECTION
ON ABANDONED-RAILROAD CORRIDOR

SEPTEMBER 2010

STANDARD DRAWING NO. E 402-NVUF-02

RICHARD L. VanCLEAVE
REGISTERED
No. 9750
STATE OF INDIANA
PROFESSIONAL ENGINEER

DESIGN STANDARDS ENGINEER

/s/ Richard L. VanCleave 09/01/10
DESIGN STANDARDS ENGINEER DATE

/s/ Mark A. Miller 09/01/10
CHIEF HIGHWAY ENGINEER DATE

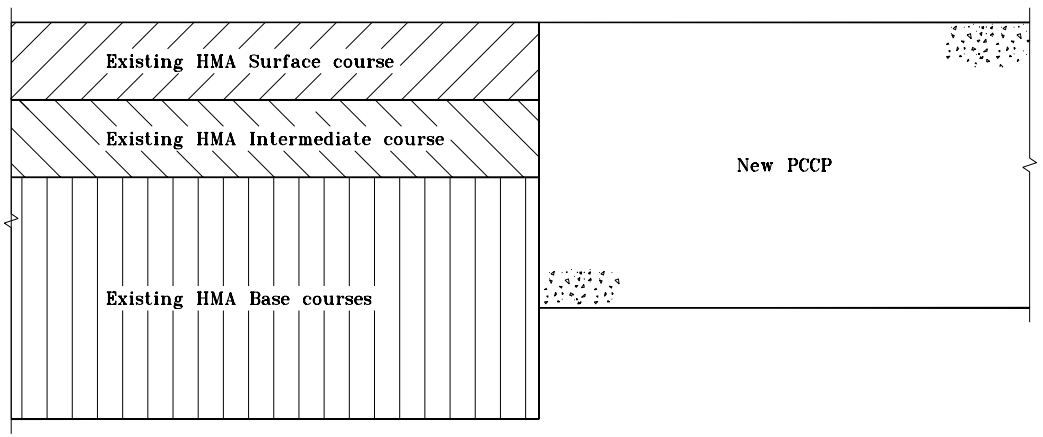

EXISTING HMA PAVEMENT TO NEW PCCP

INDIANA DEPARTMENT OF TRANSPORTATION

PAVEMENT TYPE TRANSITION

SEPTEMBER 1999

STANDARD DRAWING NO. **E 500-PTRN-01**

ANTHONY L. UREMOVICH REGISTERED No. 18095 STATE OF INDIANA PROFESSIONAL ENGINEER

DESIGN STANDARDS ENGINEER

/s/ Anthony L. Uremovich 9-01-99
DESIGN STANDARDS ENGINEER — DATE

/s/ Donald W. Lucas 9-01-99
CHIEF HIGHWAY ENGINEER — DATE

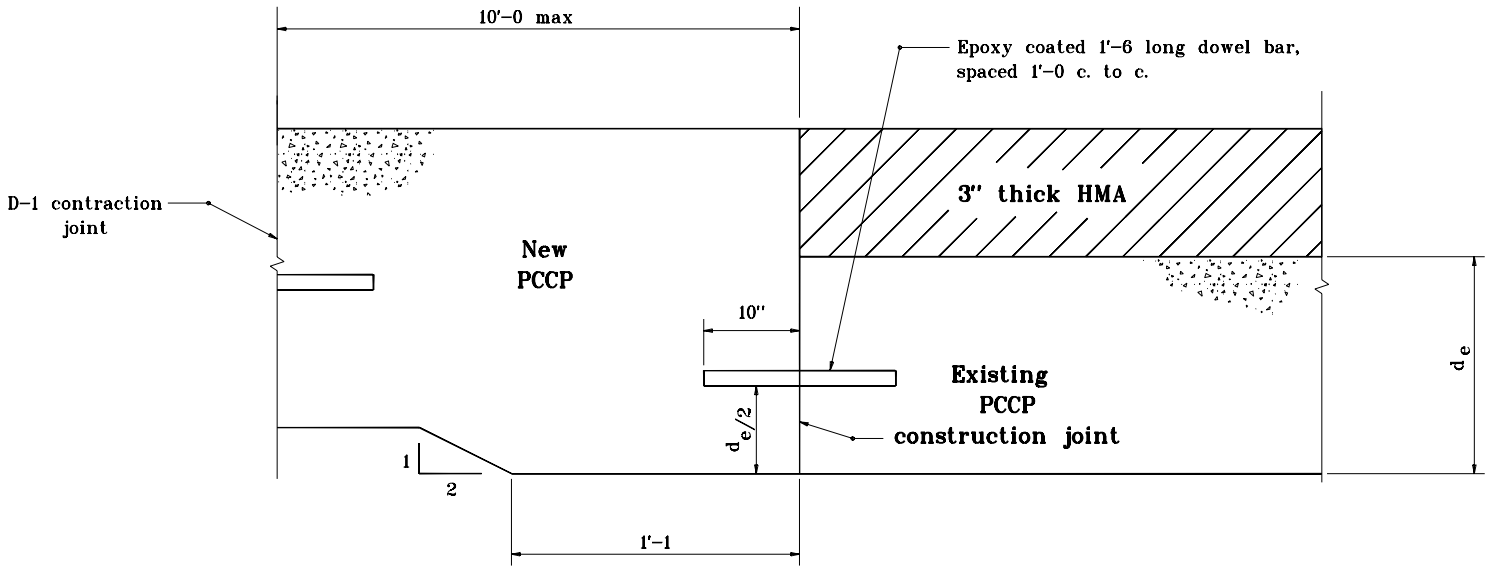

TRANSITION DESIGN WITH THICKENED SLAB

New PCCP Thickness is Less Than
that of 3" Thick HMA + Existing PCCP

INDIANA DEPARTMENT OF TRANSPORTATION

PAVEMENT TYPE TRANSITION

JANUARY 2000

STANDARD DRAWING NO. **E 500–PTRN–02**

ANTHONY L. UREMOVICH REGISTERED No. 18095 STATE OF INDIANA PROFESSIONAL ENGINEER

DESIGN STANDARDS ENGINEER

/s/ Anthony L. Uremovich 1–03–00
DESIGN STANDARDS ENGINEER — DATE

/s/ Firooz Zandi 1–03–00
CHIEF HIGHWAY ENGINEER — DATE

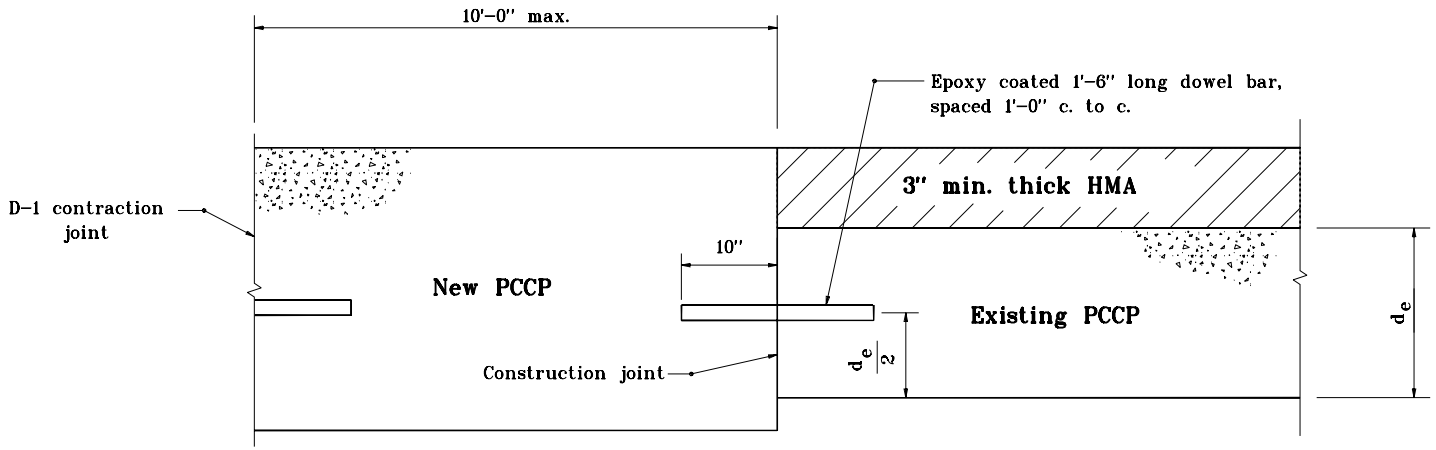

TRANSITION DESIGN

New PCCP Thickness is Greater Than or Equal to That of 3" Thick HMA + Existing PCCP

INDIANA DEPARTMENT OF TRANSPORTATION

PAVEMENT TYPE TRANSITION

SEPTEMBER 1999

STANDARD DRAWING NO. **E 500–PTRN–03**

ANTHONY L. UREMOVICH REGISTERED No. 18095 STATE OF INDIANA PROFESSIONAL ENGINEER

DESIGN STANDARDS ENGINEER

/s/ Anthony L. Uremovich 9–01–99
DESIGN STANDARDS ENGINEER — DATE

/s/ Donald W. Lucas 9–01–99
CHIEF HIGHWAY ENGINEER — DATE

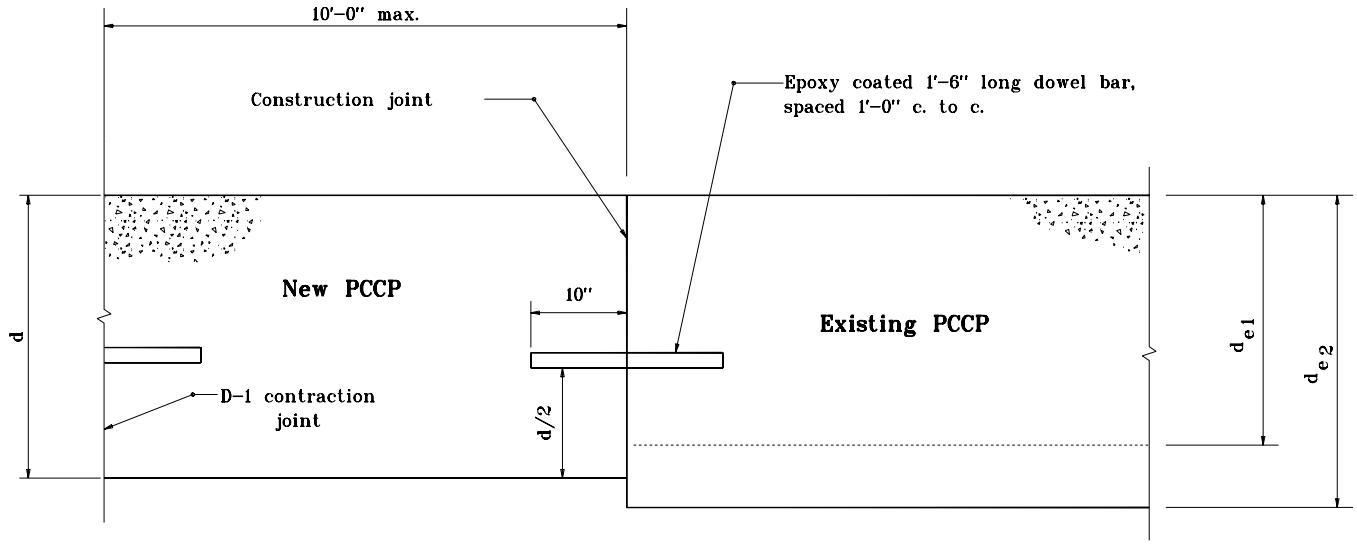

TRANSITION DESIGN

New PCCP to Existing PCCP

$d \geq d_{e_1}$ (New PCCP Thicker Than Existing)

$d < d_{e_2}$ (New PCCP Thinner Than Existing)

INDIANA DEPARTMENT OF TRANSPORTATION

PAVEMENT TYPE TRANSITION

SEPTEMBER 1999

STANDARD DRAWING NO. **E 500–PTRN–04**

ANTHONY L. UREMOVICH REGISTERED No. 18095 STATE OF INDIANA PROFESSIONAL ENGINEER

DESIGN STANDARDS ENGINEER

/s/ Anthony L. Uremovich 9–01–99
DESIGN STANDARDS ENGINEER DATE

/s/ Donald W. Lucas 9–01–99
CHIEF HIGHWAY ENGINEER DATE

GENERAL NOTES

1. Pavement contraction joints shall be extended through the concrete shoulder in the gore areas.
2. Shoulder corrugations shall be omitted in this area.
3. Any required additional length of L above the 600' minimum shall be added to the length of this parallel lane segment. (Example: required L = 700' then this parallel lane segment length = 400')
4. See tables on Standard Drawing E 401-REBS-04.
5. See Standard Drawing E 401-REBS-03 for Section B-B.

CURVE DATA

△ = 3°00'00"
R = 2864.79'
T = 75.02'
L = 150.0'
E = 0.98'

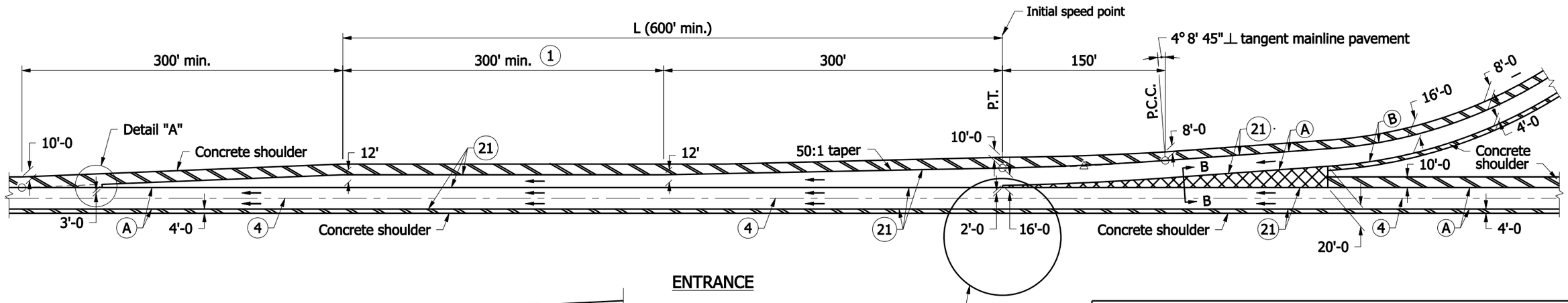

ENTRANCE

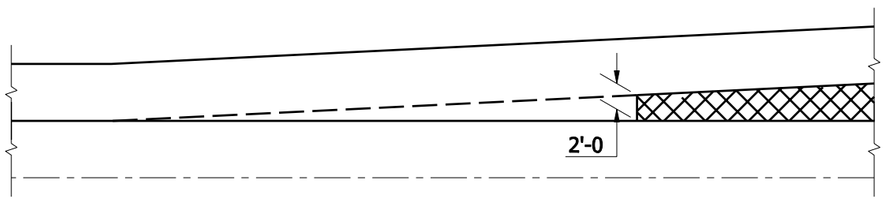

DETAIL "A"

LEGEND

- A — Pavement type and thickness as specified for the mainline.
- B — Pavement type and thickness as specified for ramps.
- 4 — Longitudinal joint
- 21 — Longitudinal construction joint
- Concrete shoulder (Thickness of mainline pavement)
- Concrete shoulder (Thickness as specified on Typical Sections)

INDIANA DEPARTMENT OF TRANSPORTATION

RAMP ENTRANCE TERMINAL CONCRETE SHOULDER

SEPTEMBER 2008

STANDARD DRAWING NO. E 501-RECS-01



DESIGN STANDARDS ENGINEER

/s/ Richard L. VanCleave — 09/02/08
DESIGN STANDARDS ENGINEER — DATE

/s/ Mark A. Miller — 09/02/08
CHIEF HIGHWAY ENGINEER — DATE

GENERAL NOTES

1. Pavement contraction joints shall be extended through the concrete shoulder in the gore areas.
2. Shoulder corrugations shall be omitted in this area.
3. See tables on Standard Drawing E 401-REBS-04.
4. See Standard Drawing E 501-RECS-03 for Section A-A.

CURVE DATA

△ = 2°17'26"
R = 9549.30'
T = 190.91'
L = 381.76'
E = 1.91'

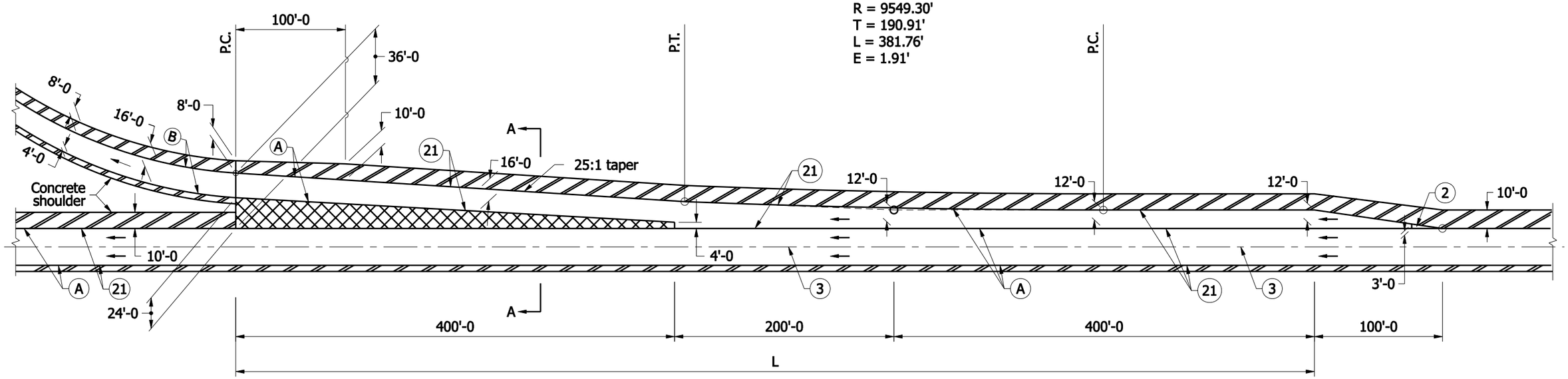

EXIT

LEGEND

- (A) Pavement type and thickness as specified for the mainline.
- (B) Pavement type and thickness as specified for ramps.
- (3) Longitudinal joint
- (21) Longitudinal construction joint
- Concrete shoulder (Thickness of mainline pavement)
- Concrete shoulder (Thickness as specified on Typical Sections)

INDIANA DEPARTMENT OF TRANSPORTATION

RAMP EXIT TERMINAL CONCRETE SHOULDER

SEPTEMBER 2008

STANDARD DRAWING NO. E 501- RECS-02

RICHARD L. VanCLEAVE
REGISTERED
No. 9750
STATE OF INDIANA
PROFESSIONAL ENGINEER

DESIGN STANDARDS ENGINEER

/s/ Richard L. VanCleave 09/02/08
DESIGN STANDARDS ENGINEER — DATE

/s/ Mark A. Miller 09/02/08
CHIEF HIGHWAY ENGINEER — DATE

GENERAL NOTES

(1) For underdrain details see Standard Drawing E 718-UNDR-01.

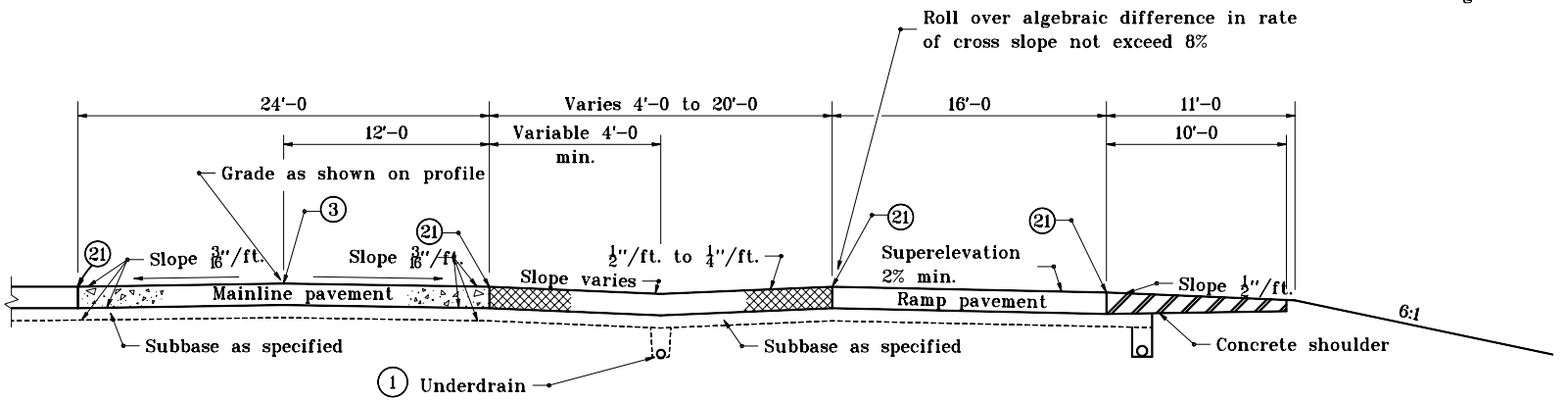

SECTION A-A

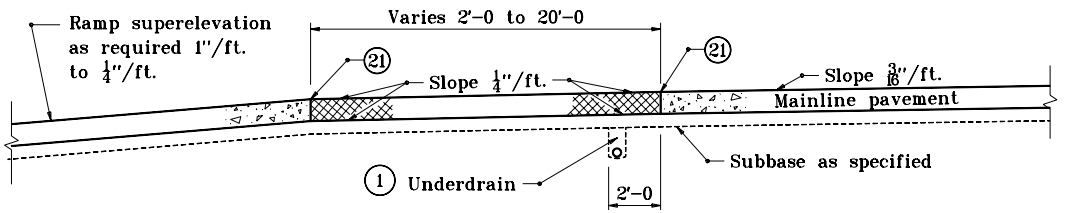

SECTION B-B

LEGEND

(A) Pavement type and thickness as specified for the mainline.
(B) Pavement type and thickness as specified for ramps.
(3) Longitudinal joint
(21) Longitudinal construction joint
Concrete shoulder (Thickness of mainline pavement)
Concrete shoulder (Thickness as specified on Typical Sections)

INDIANA DEPARTMENT OF TRANSPORTATION

RAMP CROSS SECTIONS CONCRETE SHOULDERS

JANUARY 1999

STANDARD DRAWING NO. **E 501-RECS-03**

ANTHONY L. UREMOVICH REGISTERED No. 18095 STATE OF INDIANA PROFESSIONAL ENGINEER

DESIGN STANDARDS ENGINEER

DETAILS PLACED IN THIS FORMAT	11-15-99
/s/ Anthony L. Uremovich, DESIGN STANDARDS ENGINEER	11-15-99
/s/ Firooz Zandi, CHIEF HIGHWAY ENGINEER	11-15-99
ORIGINALLY APPROVED	1-04-99

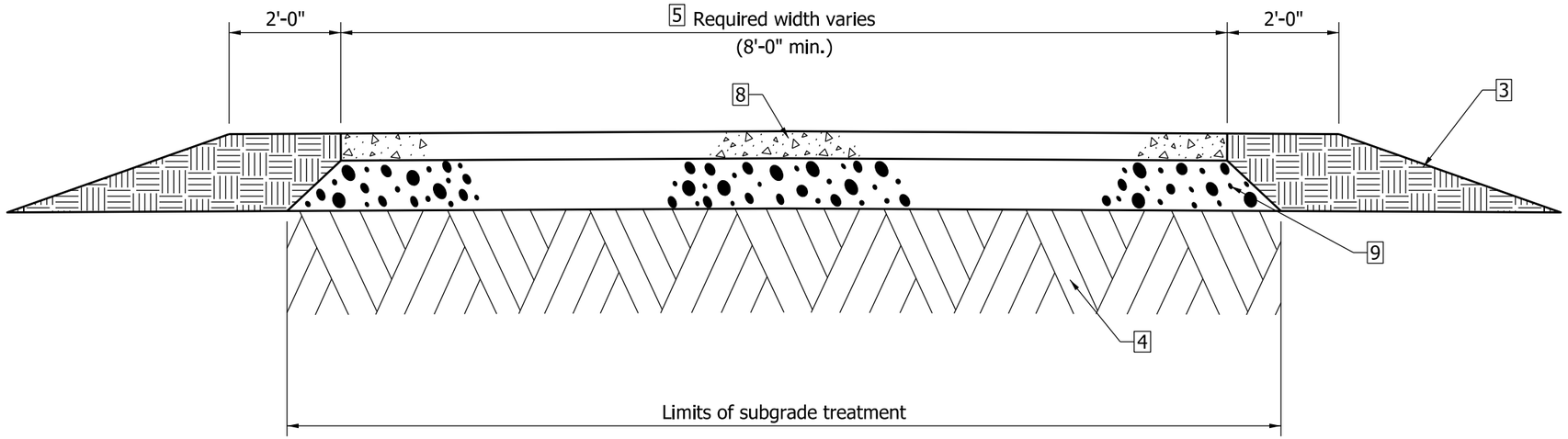

LEGEND:

3 Earth Shoulder

4 Subgrade Treatment (6" Coarse Aggregate No.53)

5 Width and Cross Slope as required

8 4" of PCCP with 1/8" saw cut Transverse Joint spaced at 8'-0" without Dowel Bars

9 4" Compacted Aggregate No.53, Base

INDIANA DEPARTMENT OF TRANSPORTATION

PCCP NONMOTORIZED-VEHICLE-USE FACILITY PAVEMENT SECTION

SEPTEMBER 2010

STANDARD DRAWING NO. E 502-NVUF-01

RICHARD L. VanCLEAVE
REGISTERED
No. 9750
STATE OF INDIANA
PROFESSIONAL ENGINEER

DESIGN STANDARDS ENGINEER

/s/ Richard L. VanCleave 09/01/10
DESIGN STANDARDS ENGINEER DATE

/s/ Mark A. Miller 09/01/10
CHIEF HIGHWAY ENGINEER DATE

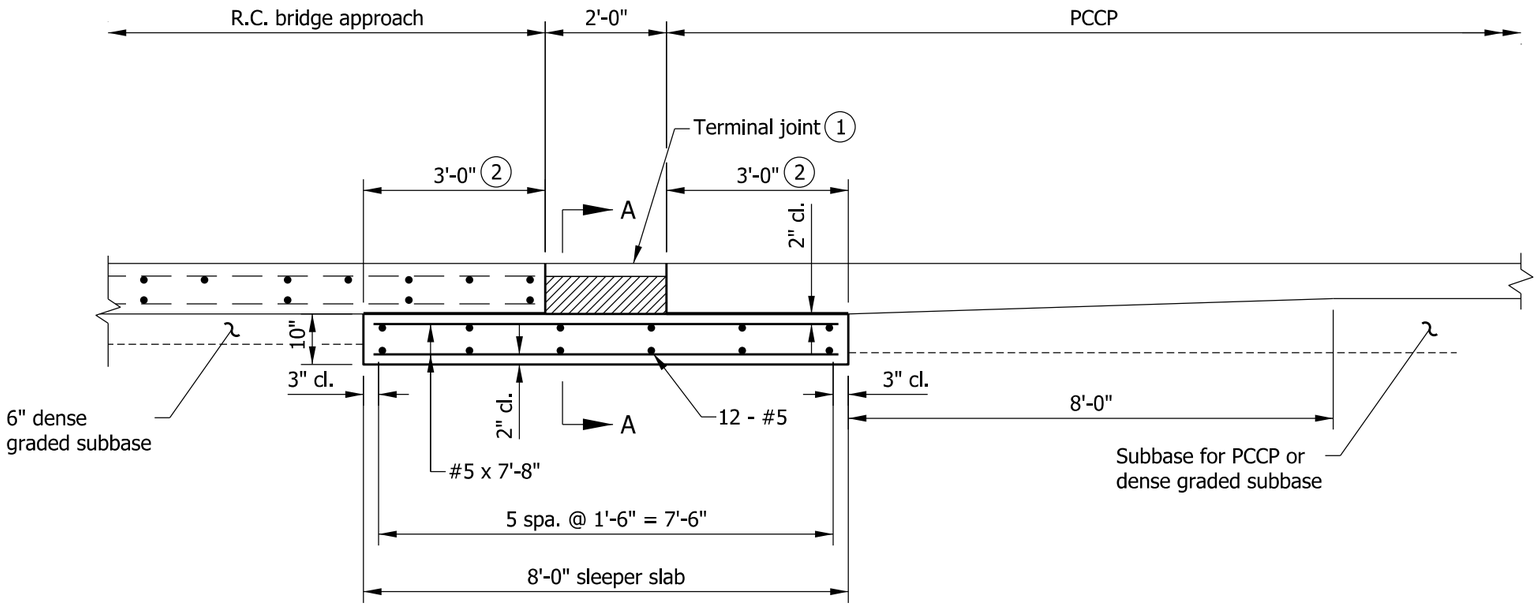

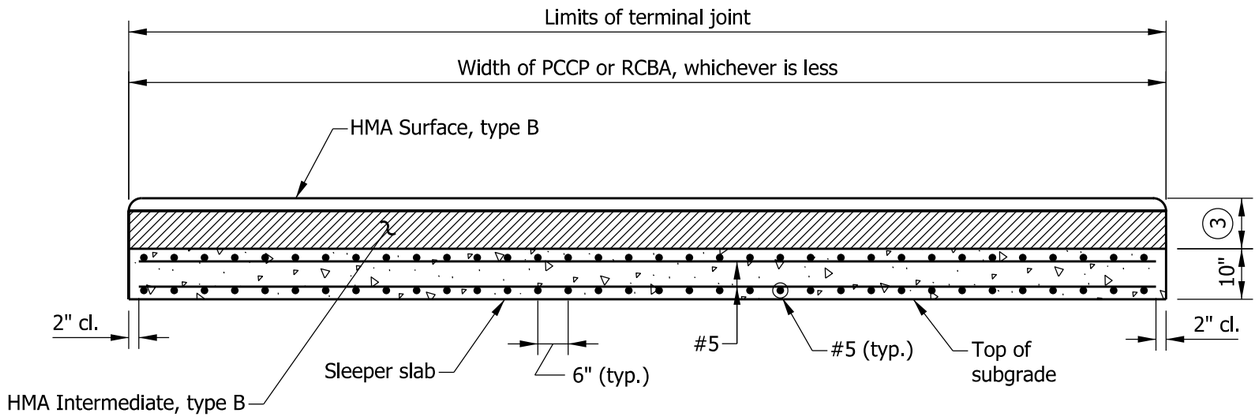

SECTION A-A

NOTES

(1) Terminal joint elevation shall match elevation of adjacent PCCP and RCBA.

(2) Limits of polyethylene bond breaker.

(3) RCBA thickness.

INDIANA DEPARTMENT OF TRANSPORTATION

REINFORCED CONCRETE BRIDGE APPROACH
TERMINAL JOINT
FOR USE WITH PCCP
SEPTEMBER 2012

STANDARD DRAWING NO. E 503-BATJ-01

RICHARD L. VanCLEAVE
REGISTERED
No. 9750
STATE OF INDIANA
PROFESSIONAL ENGINEER

/s/ Richard L. Van Cleave 09/04/12
SUPERVISOR, ROADWAY STANDARDS DATE

/s/ Mark A. Miller 09/04/12
CHIEF ENGINEER DATE

DOWEL BAR SIZES	
Pavement Thickness, D	Dowel Bar Diameter
Less than 9"	1"
9" through 12"	$1\frac{1}{4}$"
Greater than 12"	$1\frac{1}{2}$ "

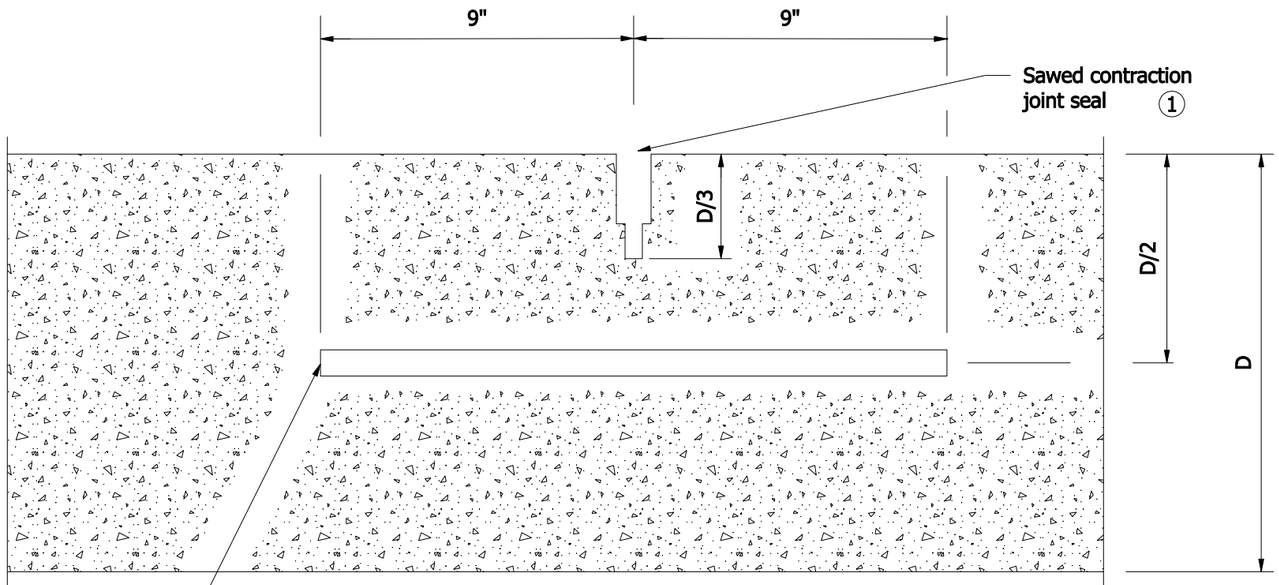

LONGITUDINAL SECTION THROUGH PCCP

NOTES:

1. For Type D-1 contraction joint sealant options, see Standard Drawing E 503-CCPJ-06.

INDIANA DEPARTMENT OF TRANSPORTATION

TYPE D-1 CONTRACTION JOINT

SEPTEMBER 2007

STANDARD DRAWING NO. E 503-CCPJ-01

RICHARD L. VanCLEAVE REGISTERED No. 9750 STATE OF INDIANA PROFESSIONAL ENGINEER

DESIGN STANDARDS ENGINEER

/s/ Richard L. VanCleave 9/4/07
DESIGN STANDARDS ENGINEER — DATE

/s/ Mark A. Miller 9/4/07
CHIEF HIGHWAY ENGINEER — DATE

TIE-BAR SIZES FOR LONGITUDINAL JOINT	
Pavement Thickness, D	Tie-Bar Size
Less than or equal to 9"	#5
Greater than 9"	#6

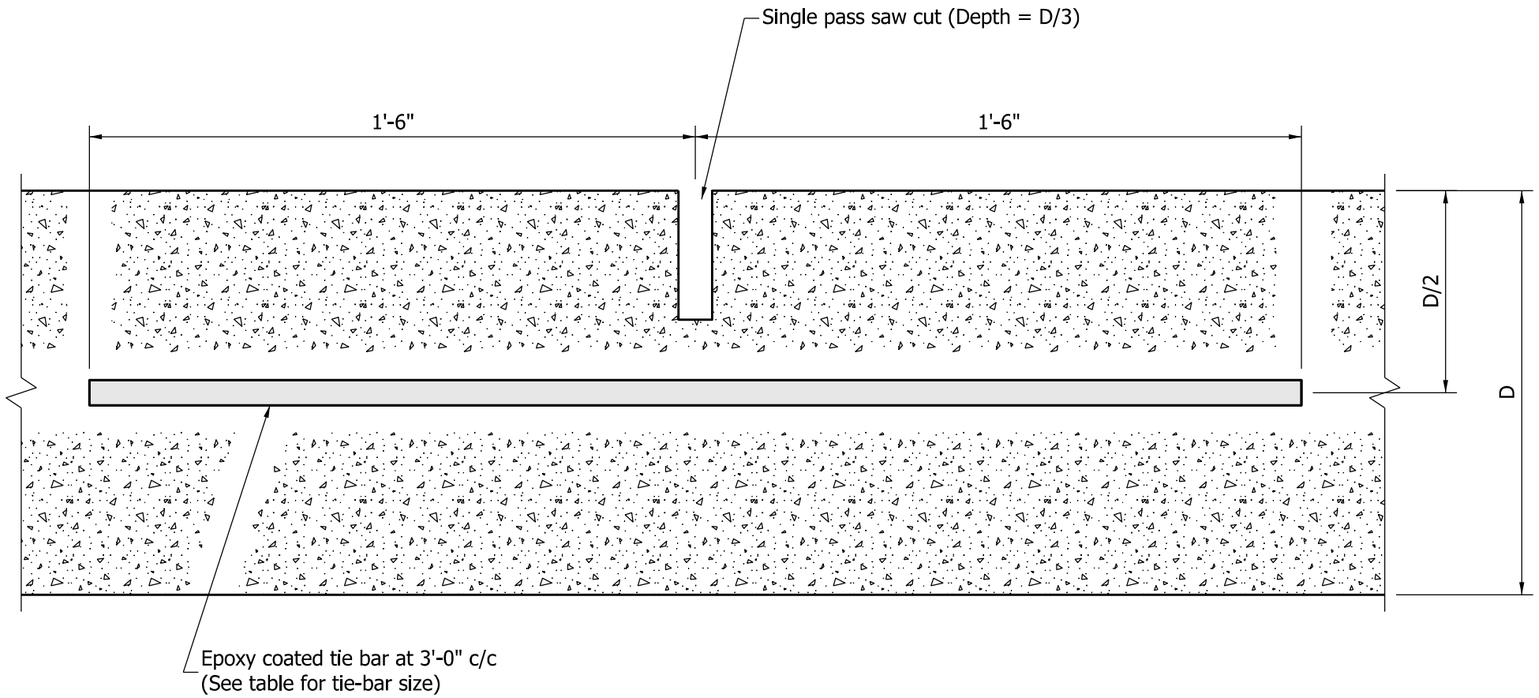

TRANSVERSE SECTION THROUGH PCCP

INDIANA DEPARTMENT OF TRANSPORTATION

LONGITUDINAL JOINT

SEPTEMBER 2012

STANDARD DRAWING NO. E 503-CCPJ-02

RICHARD L. VanCLEAVE REGISTERED No. 9750 STATE OF INDIANA PROFESSIONAL ENGINEER

/s/ Richard L. VanCleave 09/04/12
SUPERVISOR, ROADWAY STANDARDS DATE

/s/ Mark A. Miller 09/04/12
CHIEF ENGINEER DATE

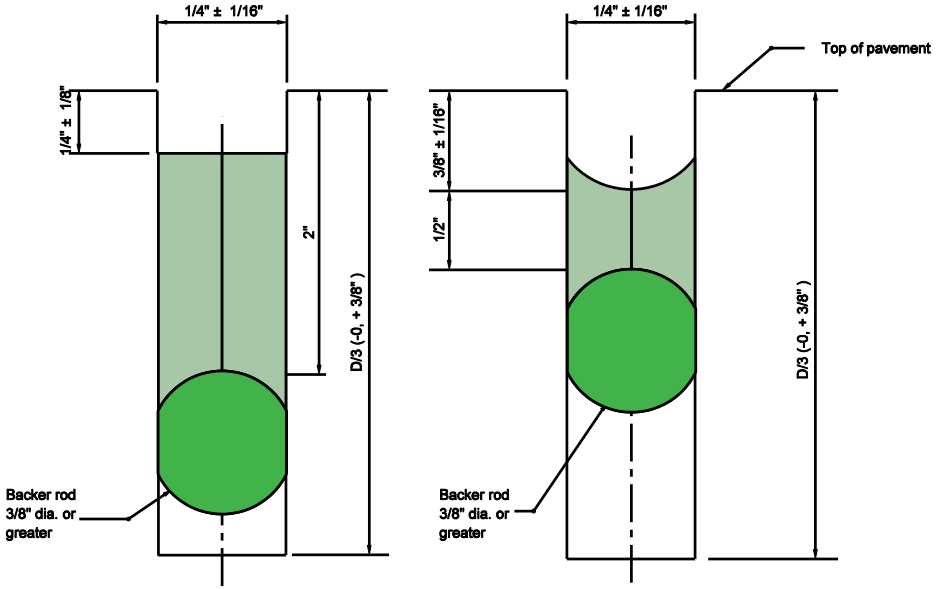

HOT POURED JOINT SEALANT

SILICONE JOINT SEALANT

SAWED LONGITUDINAL JOINT SEALANT OPTIONS

INDIANA DEPARTMENT OF TRANSPORTATION

LONGITUDINAL JOINT

MARCH 2004

STANDARD DRAWING NO. E 503-CCPJ-03

RICHARD L. VanCLEAVE REGISTERED No. 9750 STATE OF INDIANA PROFESSIONAL ENGINEER

DESIGN STANDARDS ENGINEER

/s/ Richard L. VanCleave 3-01-04
DESIGN STANDARDS ENGINEER DATE

/s/ Richard K. Smutzer 3-01-04
CHIEF HIGHWAY ENGINEER DATE

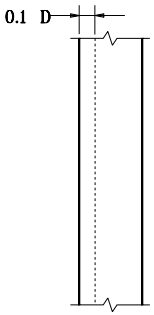

PLAN

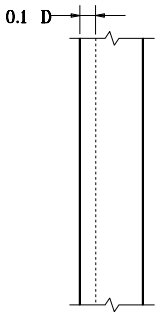

PLAN

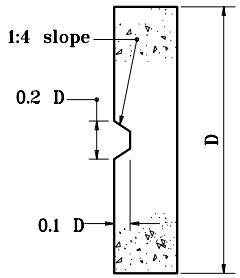

ELEVATION

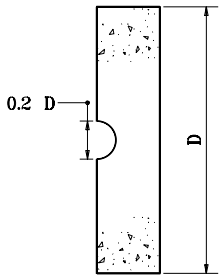

ELEVATION

NOTES

1. See Standard Drawings E 503-CCPJ-01, -02, and -03 for sawed construction joint sealant options.

INDIANA DEPARTMENT OF TRANSPORTATION

LONGITUDINAL KEYWAY JOINT

SEPTEMBER 1999

STANDARD DRAWING NO. **E 503-CCPJ-04**

ANTHONY L. UREMOVICH REGISTERED No. 18095 STATE OF INDIANA PROFESSIONAL ENGINEER

DESIGN STANDARDS ENGINEER

/s/ Anthony L. Uremovich — DESIGN STANDARDS ENGINEER — 9-01-99 DATE

/s/ Donald W. Lucas — CHIEF HIGHWAY ENGINEER — 9-01-99 DATE

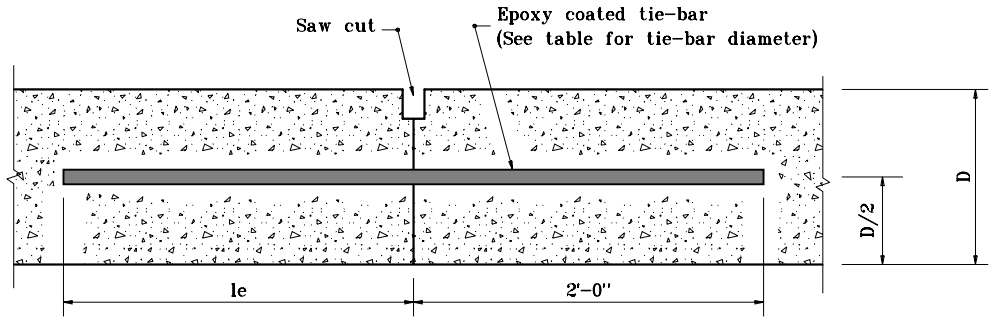

SECTION A-A

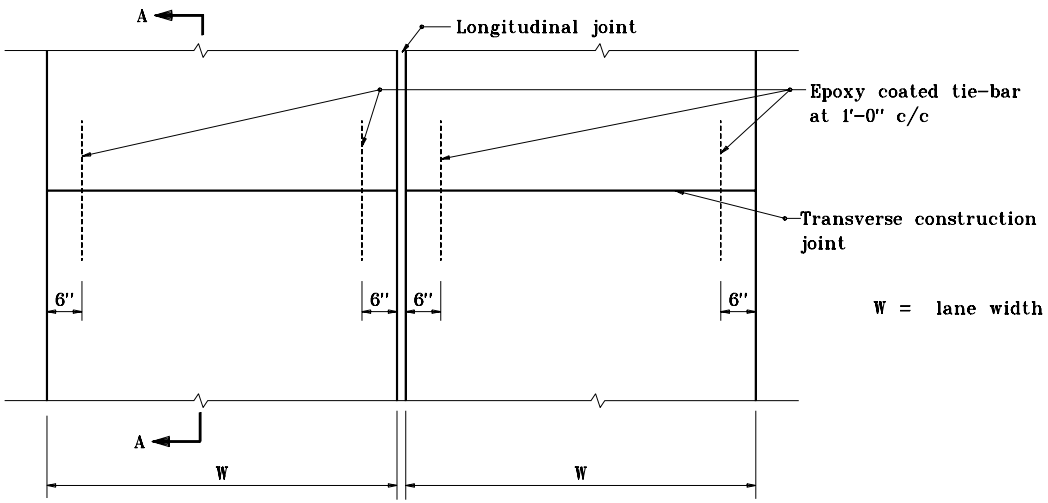

W = lane width

PLAN

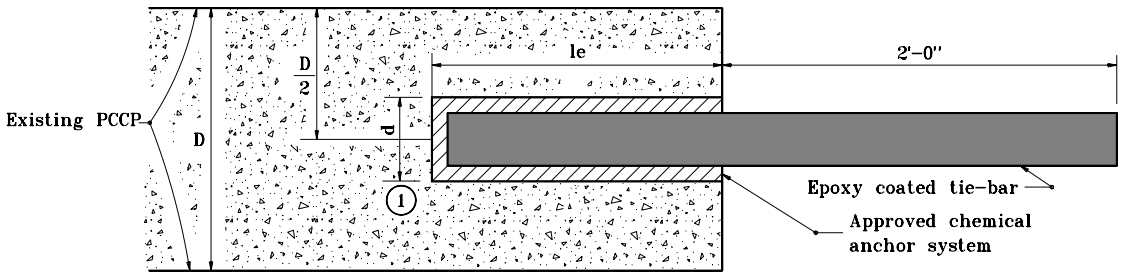

RETROFIT CONSTRUCTION TIE-BAR EMBEDMENT DETAIL

NOTES

(1) Diameter of drilled hole d shall be in accordance with the chemical anchor system manufacturer's instructions.

TIE-BAR SIZES FOR TRANSVERSE CONSTRUCTION JOINT

Pavement Thickness, D	Tie Bar Size	Min. le
Less than 9"	#5	1'-0"
9" through 12"	#8	1'-8"
Greater than 12"	#10	2'-0"

INDIANA DEPARTMENT OF TRANSPORTATION

TRANSVERSE CONSTRUCTION JOINT

SEPTEMBER 1999

STANDARD DRAWING NO. E 503-CCPJ-05

ANTHONY L. UREMOVICH REGISTERED No. 18095 STATE OF INDIANA PROFESSIONAL ENGINEER

DESIGN STANDARDS ENGINEER

/s/ Anthony L. Uremovich 9-01-99
DESIGN STANDARDS ENGINEER DATE

/s/ Donald W. Lucas 9-01-99
CHIEF HIGHWAY ENGINEER DATE

NOTES

1. Transverse joints shall be constructed perpendicular to the centerline with a maximum spacing of 18'-0" unless otherwise specified.
2. The configuration of the preformed elastomeric joint seal shall be a 9/16" to 5/8" wide seal with at least a five cell internal design. The seal height shall be 9/16" to 13/16" in uncompressed stage.
3. For transverse construction joints, the initial saw cut may be eliminated.

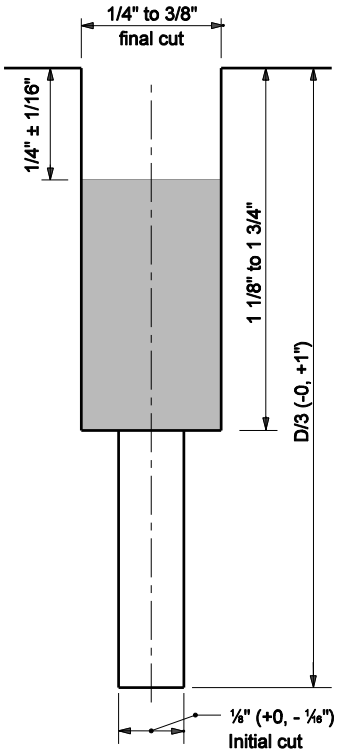

PREFORMED ELASTOMERIC SEAL

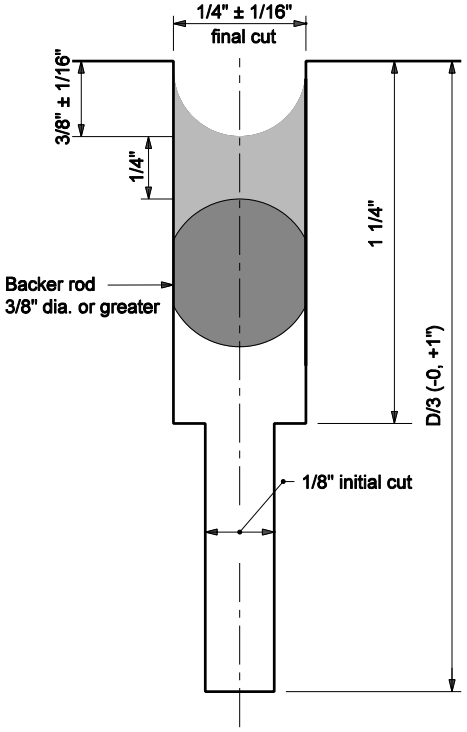

SILICONE JOINT SEALANT

TYPE D-1 SAWED CONTRACTION JOINT SEALANT OPTIONS

INDIANA DEPARTMENT OF TRANSPORTATION

TRANSVERSE JOINT SEALS

MARCH 2005

STANDARD DRAWING NO. E 503-CCPJ-06

RICHARD L. VanCLEAVE REGISTERED No. 9750 STATE OF INDIANA PROFESSIONAL ENGINEER

DESIGN STANDARDS ENGINEER

/s/ Richard L. VanCleave 3-01-05
DESIGN STANDARDS ENGINEER DATE

/s/ Richard K. Smutzer 3-01-05
CHIEF HIGHWAY ENGINEER DATE

TIE-BAR SIZES FOR LONGITUDINAL CONSTRUCTION JOINT		
Pavement Thickness, D	**Tie-Bar Size**	**Spacing**
Less than 9"	#5	3'-0" c/c
9" through 12"	#6	3'-0" c/c
Greater than 12"	#6	2'-0" c/c
	or #7	3'-0" c/c

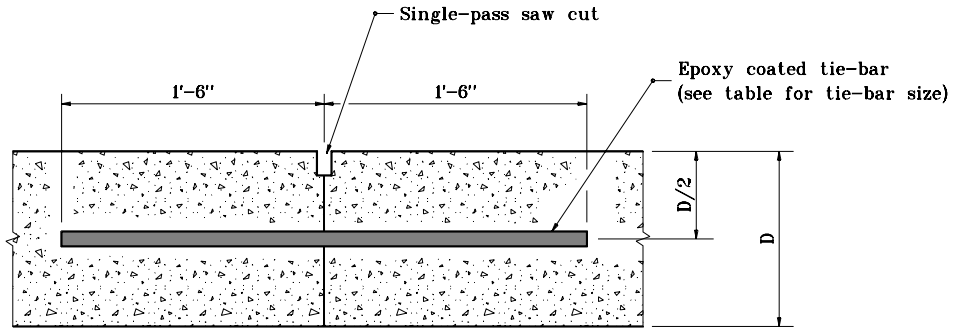

SECTION A-A

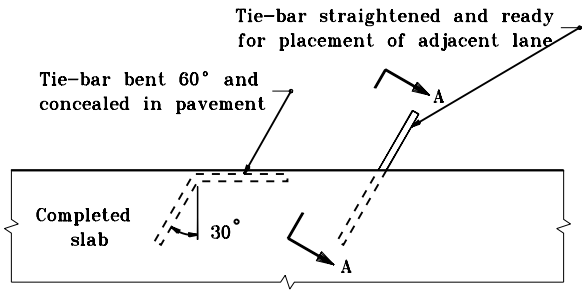

PLAN VIEW

METHOD OF PLACING TIE-BAR FOR LONGITUDINAL CONSTRUCTION JOINT

INDIANA DEPARTMENT OF TRANSPORTATION

LONGITUDINAL CONSTRUCTION JOINT

SEPTEMBER 1999

STANDARD DRAWING NO. **E 503-CCPJ-07**

ANTHONY L. UREMOVICH REGISTERED No. 18095 STATE OF INDIANA PROFESSIONAL ENGINEER

DESIGN STANDARDS ENGINEER

/s/ Anthony L. Uremovich 9-01-99
DESIGN STANDARDS ENGINEER — DATE

/s/ Donald W. Lucas 9-01-99
CHIEF HIGHWAY ENGINEER — DATE

NOTES:

(1) Diameter of drilled hole (d) shall be in accordance with the chemical anchor system manufacturer's instructions.

PAVEMENT THICKNESS, D	LONGITUDINAL CONSTRUCTION JOINT Retrofit Tie-bars at 3'-0" c/c	
	TIE-BAR SIZE	MIN. LENGTH OF EMBEDMENT, le
Less than or equal to 9"	#5	1'-0"
Greater than 9"	#6	1'-0"

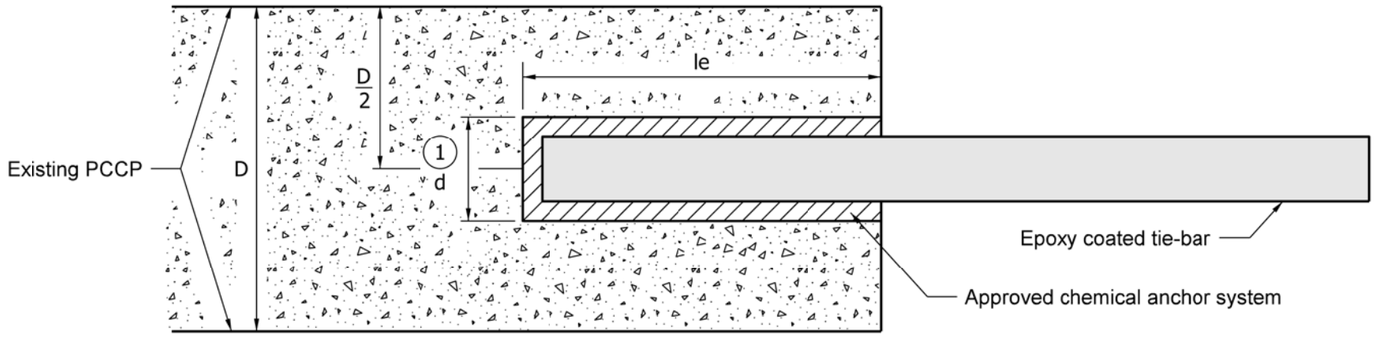

RETROFIT CONSTRUCTION TIE-BAR EMBEDMENT DETAIL

INDIANA DEPARTMENT OF TRANSPORTATION

LONGITUDINAL CONSTRUCTION JOINT

SEPTEMBER 2011

STANDARD DRAWING NO. E 503-CCPJ-08

RICHARD L. VanCLEAVE REGISTERED No. 9750 STATE OF INDIANA PROFESSIONAL ENGINEER

DESIGN STANDARDS ENGINEER

/s/ Richard L. VanCleave 09/01/11
DESIGN STANDARDS ENGINEER DATE

/s/ Mark A. Miller 09/01/11
CHIEF HIGHWAY ENGINEER DATE

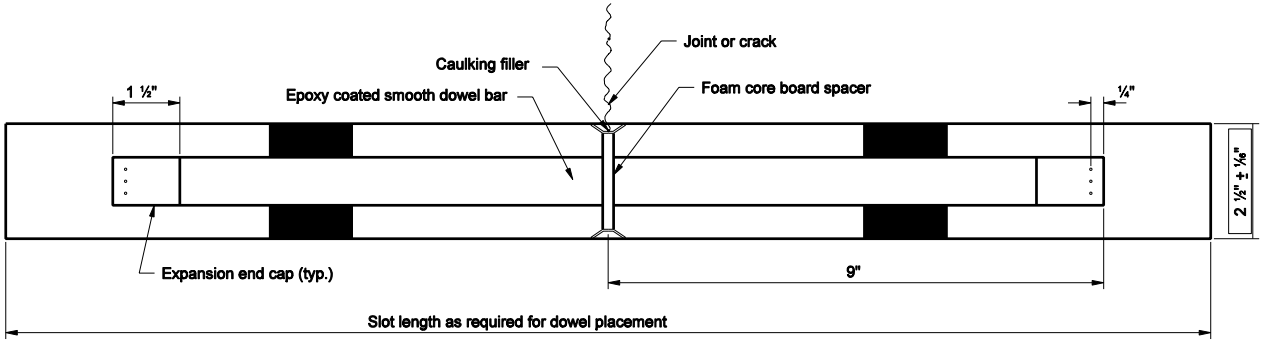

PLAN

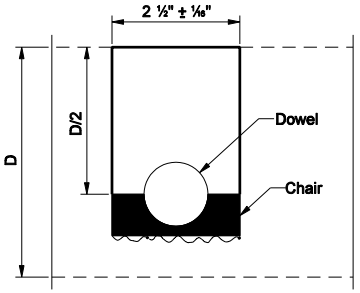

SECTION A-A

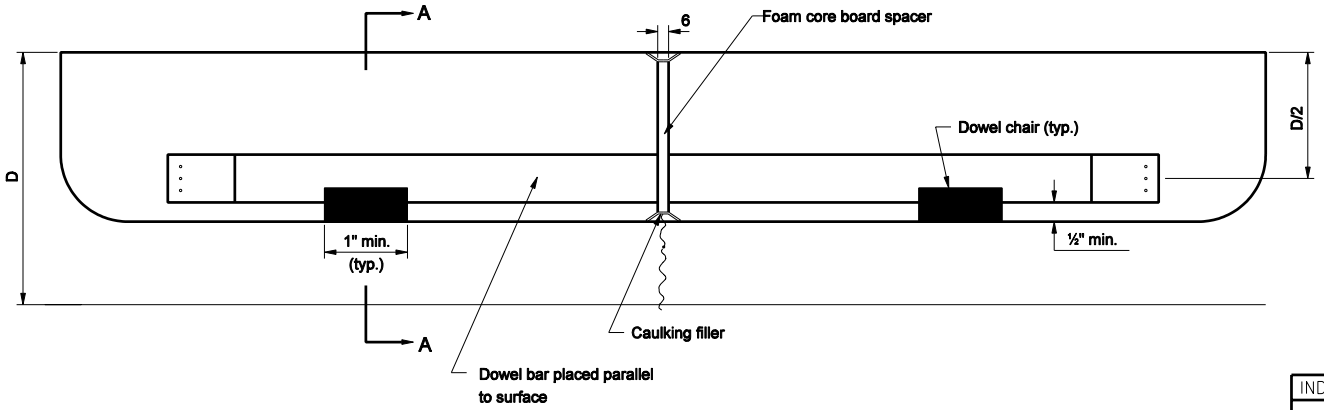

ELEVATION

NOTES:

1. For dowel slot layout requirements, see Standard Drawing E 305-RLTC-02.

DOWEL BAR SIZES	
Pavement Thickness D	Minimum Dowel Bar Diameter
Less than 12"	1 ¼"
Greater than or equal to 12"	1 ½"

DOWEL SLOT DETAILS

INDIANA DEPARTMENT OF TRANSPORTATION

RETROFIT LOAD TRANSFER FOR PCCP

SEPTEMBER 2004

STANDARD DRAWING NO. E 507-RLTC-01

RICHARD L. VanCLEAVE REGISTERED No. 9750 STATE OF INDIANA PROFESSIONAL ENGINEER

DESIGN STANDARDS ENGINEER

/s/ Richard L. VanCleave 9-01-04
DESIGN STANDARDS ENGINEER DATE

/s/ Richard K. Smutzer 9-01-04
CHIEF HIGHWAY ENGINEER DATE

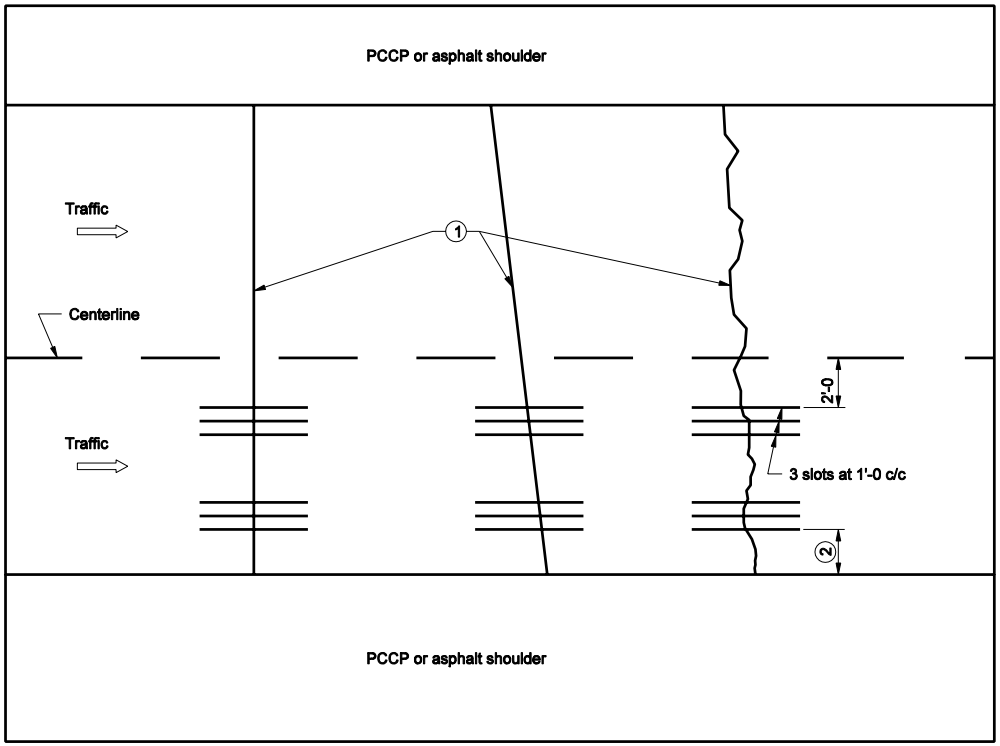

NOTES:

1. PCCP retrofit load transfer may be utilized at perpendicular joints, skewed joints, or at random cracks.
2. If lane width is 12 ft, use 3' offset. If lane width is 14 ft. use 4' offset.
3. Dowel slots shall be constructed parallel to pavement centerline.

INDIANA DEPARTMENT OF TRANSPORTATION

RETROFIT LOAD TRANSFER FOR LOAD

SEPTEMBER 2004

STANDARD DRAWING NO. E 507-RLTC-02

RICHARD L. VanCLEAVE REGISTERED No. 9750 STATE OF INDIANA PROFESSIONAL ENGINEER

DESIGN STANDARDS ENGINEER

/s/ Richard L. VanCleave 9-01-04
DESIGN STANDARDS ENGINEER DATE

/s/ Richard K. Smutzer 9-01-04
CHIEF HIGHWAY ENGINEER DATE

TABLE CWGS-1	
A	GUARDRAIL TRANSITION
< 25'	Type WGB
≥ 25'	Type TGB

NOTES:

1. See Standard Drawing E 601-CWGS-03 for General Notes.

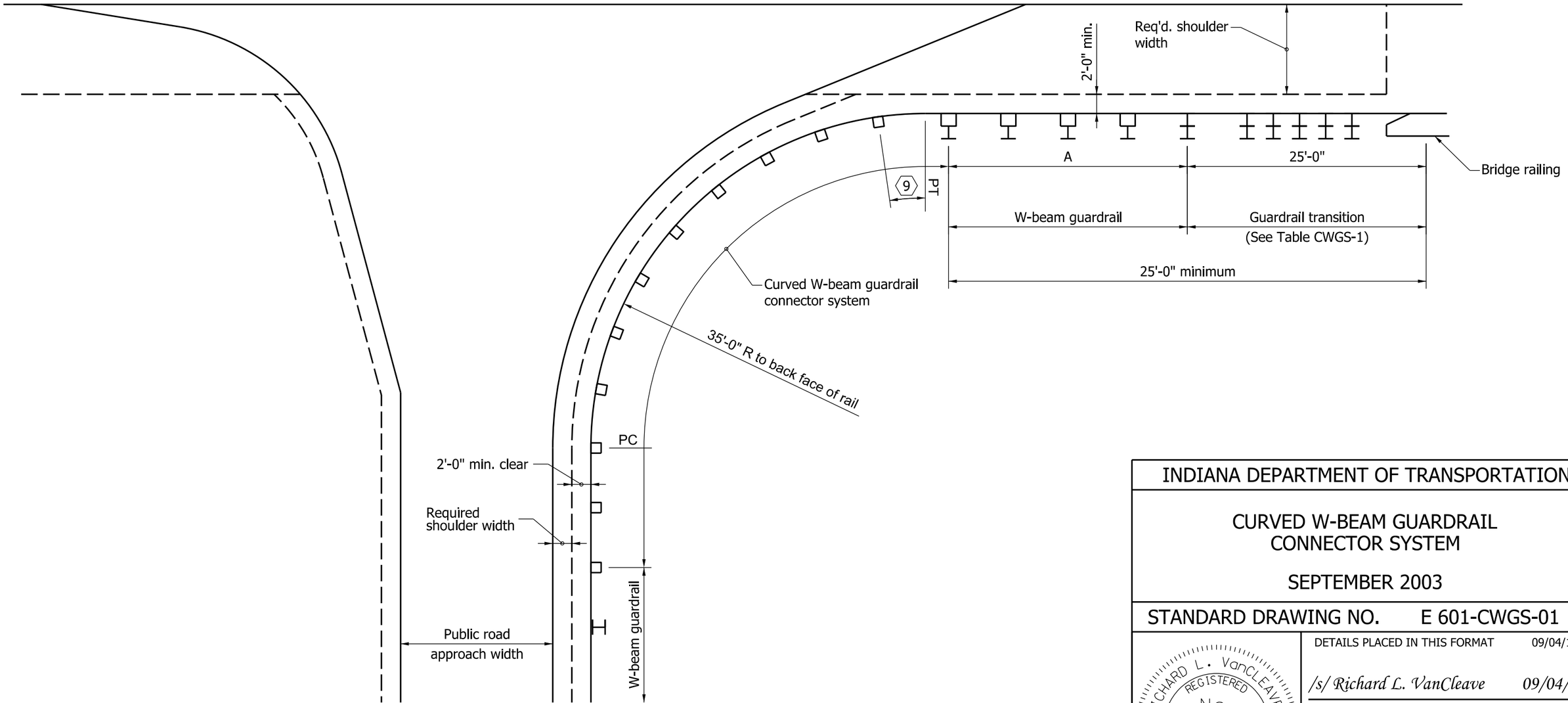

PUBLIC ROAD APPROACH INSTALLATION
AT BRIDGE END

INDIANA DEPARTMENT OF TRANSPORTATION

CURVED W-BEAM GUARDRAIL
CONNECTOR SYSTEM

SEPTEMBER 2003

STANDARD DRAWING NO. E 601-CWGS-01

RICHARD L. VanCLEAVE REGISTERED No. 9750 STATE OF INDIANA PROFESSIONAL ENGINEER

DETAILS PLACED IN THIS FORMAT 09/04/12

/s/ Richard L. VanCleave 09/04/12
SUPERVISOR, ROADWAY STANDARDS DATE

/s/ Mark A. Miller 09/04/12
CHIEF ENGINEER DATE

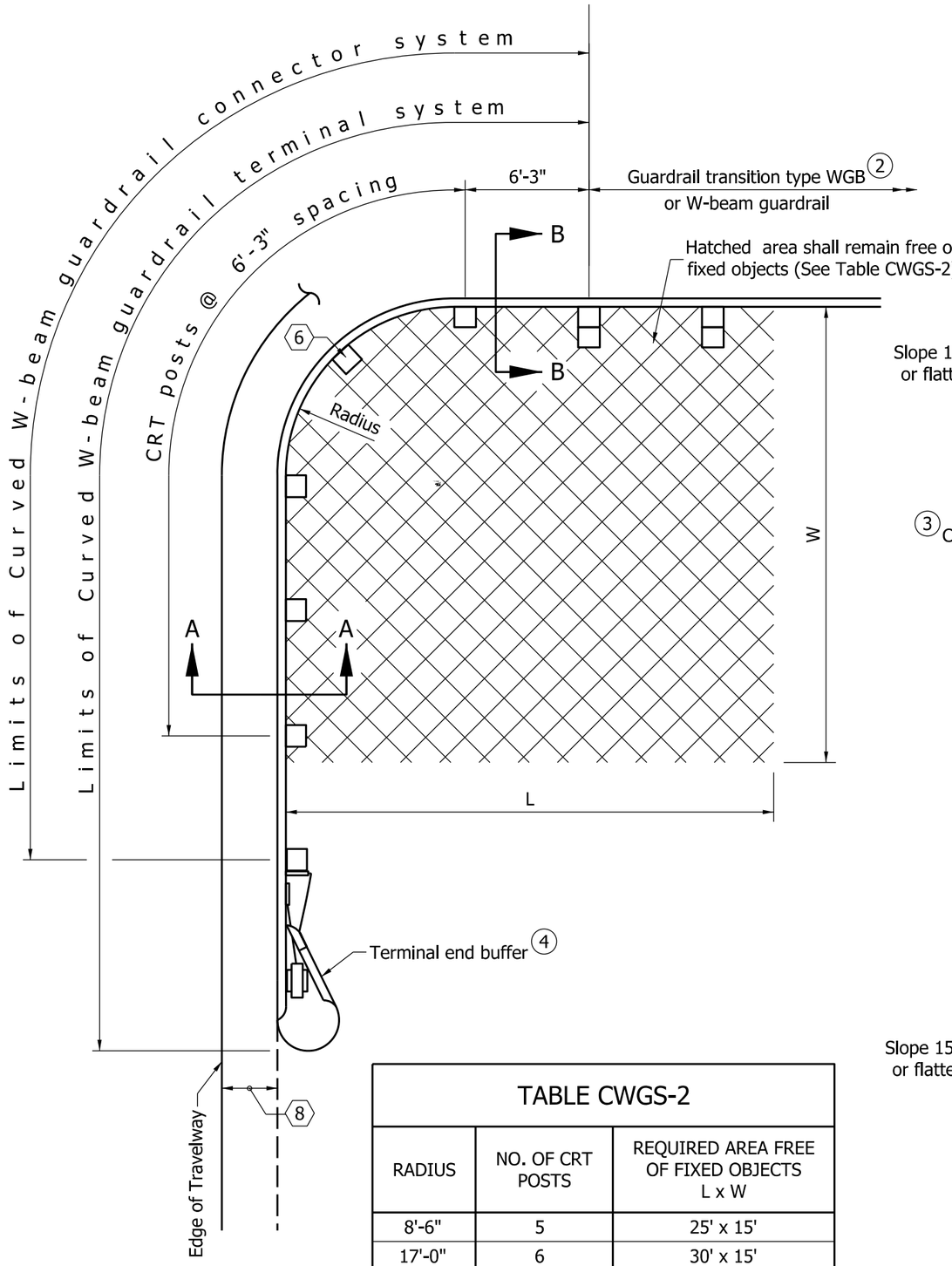

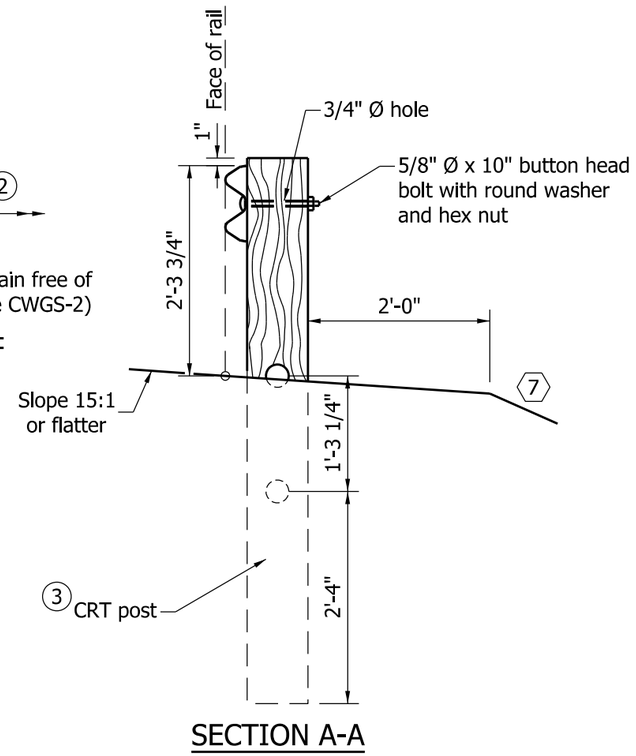

SECTION A-A

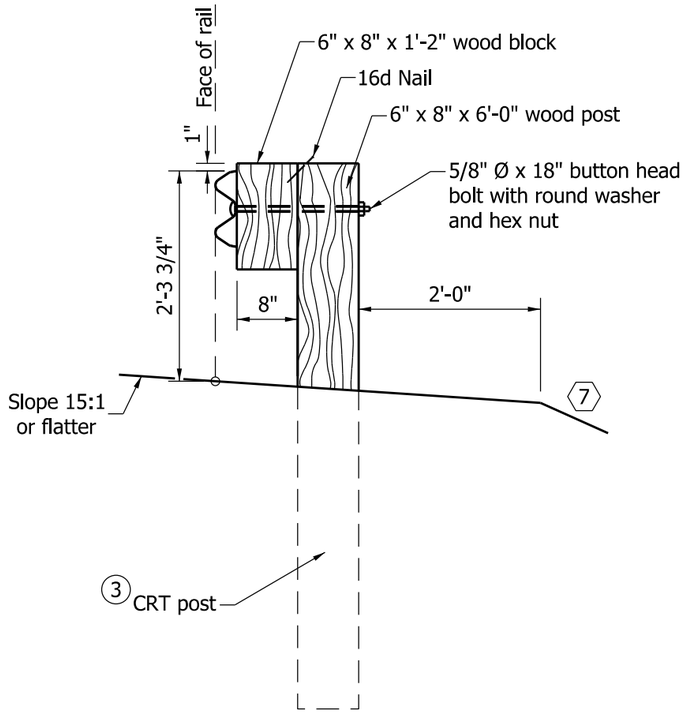

SECTION B-B

TABLE CWGS-2		
RADIUS	NO. OF CRT POSTS	REQUIRED AREA FREE OF FIXED OBJECTS L x W
8'-6"	5	25' x 15'
17'-0"	6	30' x 15'
25'-6"	8	40' x 20'
35'-0"	11	50' x 20'

NOTES:

1. See Standard Drawing E 601-CWGS-03 for General Notes.
2. See Standard Drawing E 601-TWGB-02 for guardrail transition type WBG details.
3. See Standard Drawing E 601-CWGS-06 for CRT post details.
4. See Standard Drawing E 601-CWGS-04 and 05 for terminal end buffer details.

INDIANA DEPARTMENT OF TRANSPORTATION

CURVED W-BEAM GUARDRAIL SYSTEM

SEPTEMBER 2011

STANDARD DRAWING NO. E 601-CWGS-02

RICHARD L. VanCLEAVE REGISTERED No. 9750 STATE OF INDIANA PROFESSIONAL ENGINEER

DETAILS PLACED IN THIS FORMAT 09/04/12

/s/ Richard L. VanCleave 09/04/12
SUPERVISOR, ROADWAY STANDARDS DATE

/s/ Mark A. Miller 09/04/12
CHIEF ENGINEER DATE

GENERAL NOTES

1. This drawing shall be used in conjunction with Standard Drawings E 601-CWGS-01 through -06, and E 601-CWGT-01 and -02 where a curved W-beam guardrail system is specified.

2. The type of curved W-beam guardrail system to be used shall be as shown on the plans in accordance with Table CWGS-3.

3. Except where otherwise shown, all hardware and installation shall be the same as for the guardrail specified for the adjacent run.

4. A curved W-beam guardrail terminal system shall be used to terminate a run of guardrail only at a driveway. For a public road approach, a curved W-beam guardrail connector system shall be used.

5. A maximum of two guardrail panels may be omitted from the curved W-beam guardrail terminal system only where the bridge railing falls outside of the clear zone and the plans specifically state that panels are to be omitted. See Table CWGS-03 for the number of guardrail panels to be removed for each type of curved W-beam guardrail system.

〈6〉 For the 8'-6" radius curved W-beam guardrail terminal system, guardrail shall not be bolted to this post.

〈7〉 The embankment slope behind the curved W-beam guardrail system shall be 2:1 or flatter.

〈8〉 A minimum 4 ft width shoulder shall be used with a 15 ft minimum drive radius.

〈9〉 This dimension shall be 5 ft for the 35 ft radius curved W-beam guardrail connector system.

TABLE CWGS-3

CURVED W-BEAM GUARDRAIL SYSTEMS

TYPE	RADIUS	NUMBER OF 6'-3" PANELS REMOVED
TERMINAL SYSTEM		
1	8'-6"	0
2	8'-6"	1
3	8'-6"	2
4	17'-0"	0
5	17'-0"	1
6	17'-0"	2
7	25'-0"	0
8	25'-0"	1
9	25'-0"	2
CONNECTOR SYSTEM		
1	25'-0"	0
2	35'-0"	0

INDIANA DEPARTMENT OF TRANSPORTATION

CURVED W-BEAM
GUARDRAIL SYSTEM

SEPTEMBER 1999

STANDARD DRAWING NO. E 601-CWGS-03

RICHARD L. VanCLEAVE REGISTERED No. 9750 STATE OF INDIANA PROFESSIONAL ENGINEER

DETAILS PLACED IN THIS FORMAT 09/04/12

/s/ Richard L. VanCleave 09/04/12
SUPERVISOR, ROADWAY STANDARDS DATE

/s/ Mark A. Miller 09/04/12
CHIEF ENGINEER DATE

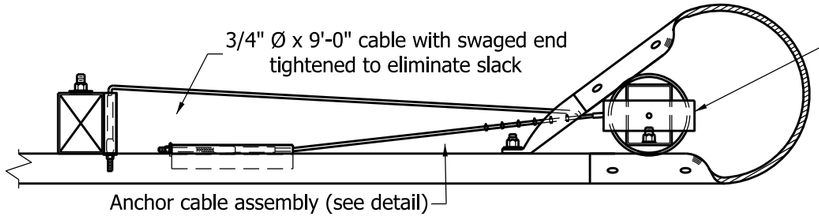

PLAN

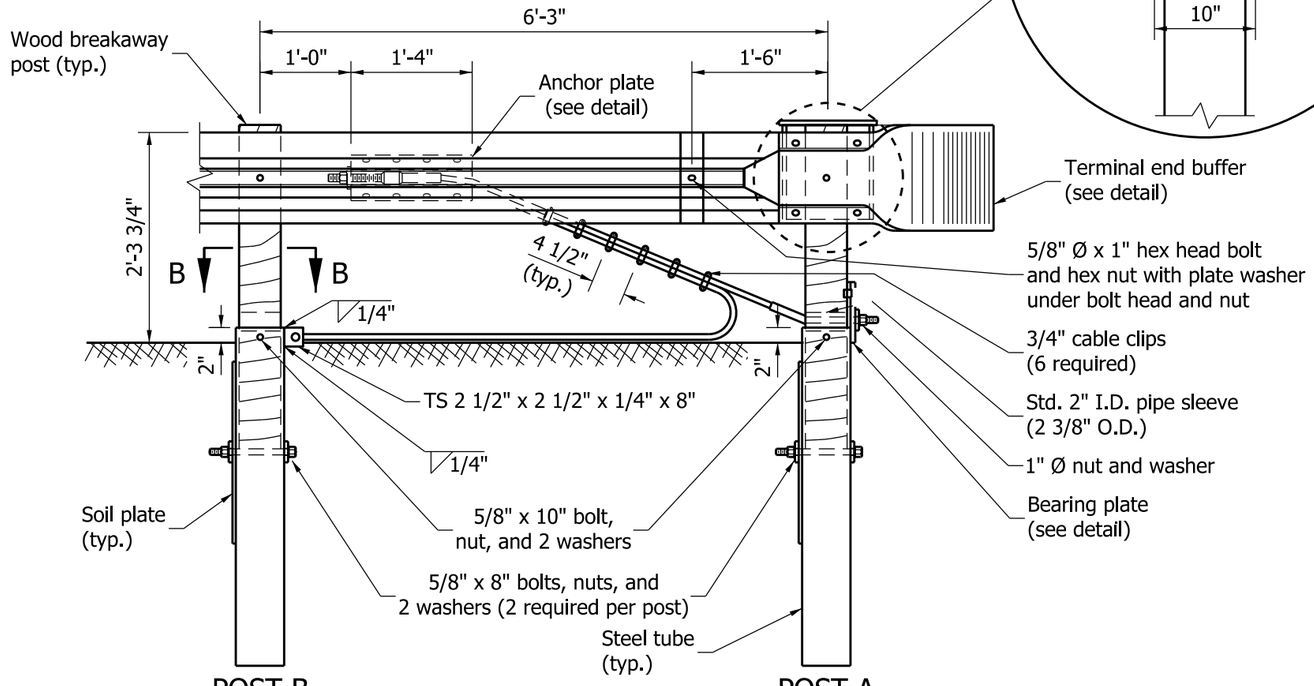

POST B

TYPE 5 ANCHOR ELEVATION

POST A

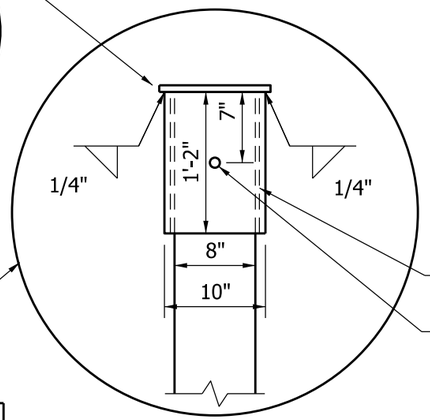

NOTES:

1. One 5/8" Ø x 10" bolt with nut and washer is required per curved W-beam steel tube and post.
2. Plate washers shall be used only where indicated.

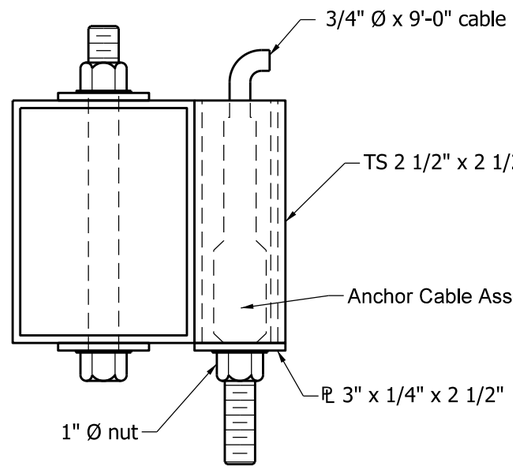

SECTION B-B

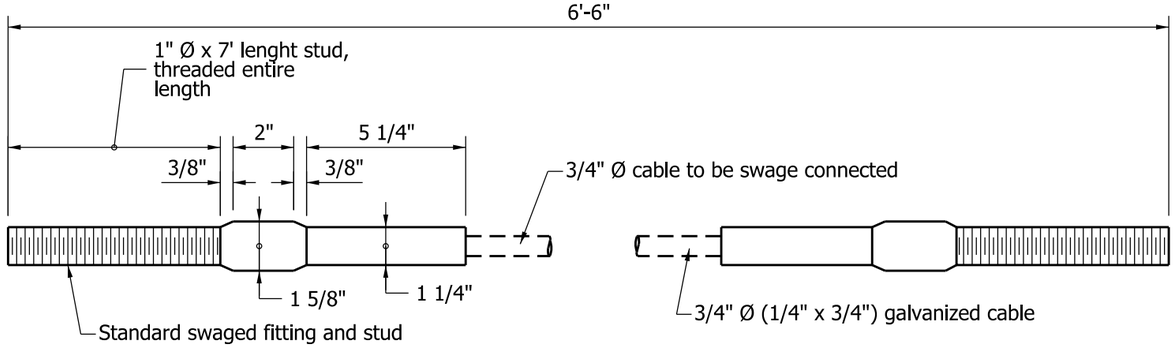

ANCHOR CABLE ASSEMBLY

INDIANA DEPARTMENT OF TRANSPORTATION

CURVED W-BEAM GUARDRAIL SYSTEM

SETEMBER 2011

STANDARD DRAWING NO. E 601-CWGS-04

RICHARD L. VanCLEAVE REGISTERED No. 9750 STATE OF INDIANA PROFESSIONAL ENGINEER

DESIGN STANDARDS ENGINEER

/s/ Richard L. VanCleave 09/01/11
DESIGN STANDARDS ENGINEER DATE

/s/ Mark A. Miller 09/01/11
CHIEF HIGHWAY ENGINEER DATE

GENERAL NOTES

1. This sheet shall be used in conjuction with Standard Drawings E 601-CWGS-01, 02, 03, and 06.
2. An alternate single piece having a similar dimensional shape to the terminal end buffer and mating with the W-beam guardrail may be used.
3. The W-beam terminal connector shall be steel of 0.138 inch thickness (10 gauge).
4. If the W-beam terminal connector is lapped on the outside of the guardrail, a galvanized 1" I.D. 2" O.D., 0.134" thick, narrow plain washer shall be placed under the splice bolt heads.
5. Attach the W-beam to the steel pipe with a $\frac{5}{8}$" diameter x $1\frac{1}{4}$" length button head bolt with no washer. No connection to the post is required.
6. Nuts for the anchor cable assembly shall be hand tightened, plus one complete turn at the anchor plate end. All other nuts shall be torqured to 50 ft.-lbs.

W-BEAM END SECTION (BUFFER)

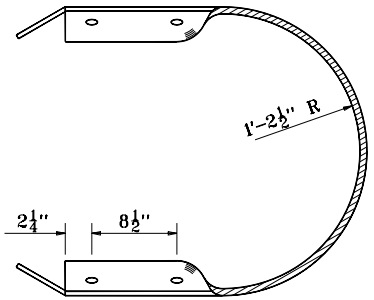

TOP VIEW

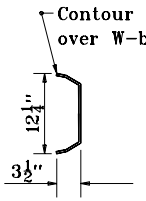

SECTION A-A

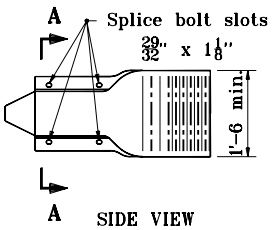

SIDE VIEW

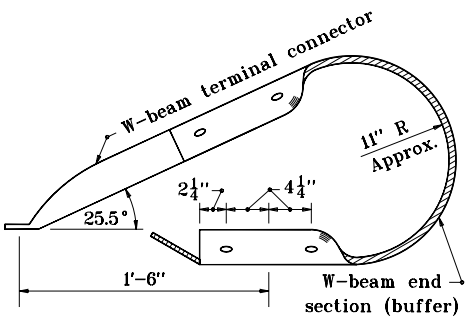

TOP VIEW

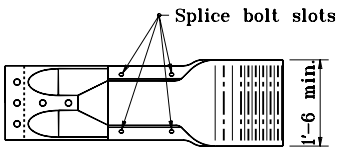

SIDE VIEW

TERMINAL END BUFFER

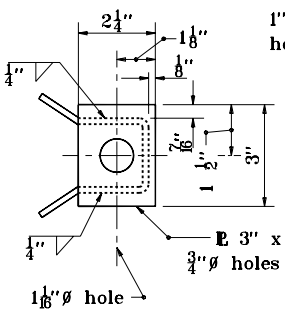

LEFT END VIEW

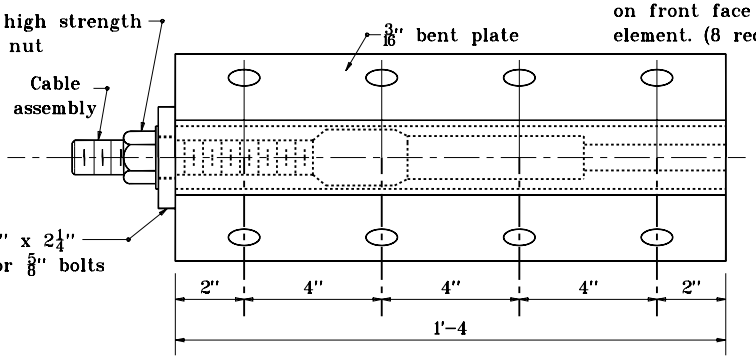

ANCHOR PLATE

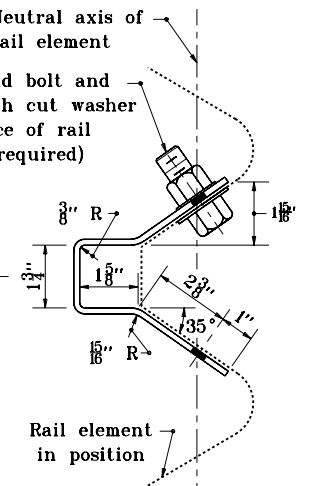

RIGHT END VIEW

INDIANA DEPARTMENT OF TRANSPORTATION

CURVED W-BEAM GUARDRAIL SYSTEM

APRIL 1996

STANDARD DRAWING NO. **E 601-CWGS-05**

ANTHONY L. UREMOVICH REGISTERED No. 18095 STATE OF INDIANA PROFESSIONAL ENGINEER

DESIGN STANDARDS ENGINEER

DETAILS PLACED IN THIS FORMAT	11-15-99
/s/ Anthony L. Uremovich	11-15-99
DESIGN STANDARDS ENGINEER	DATE
/s/ Firooz Zandi	11-15-99
CHIEF HIGHWAY ENGINEER	DATE
ORIGINALLY APPROVED	4-01-96

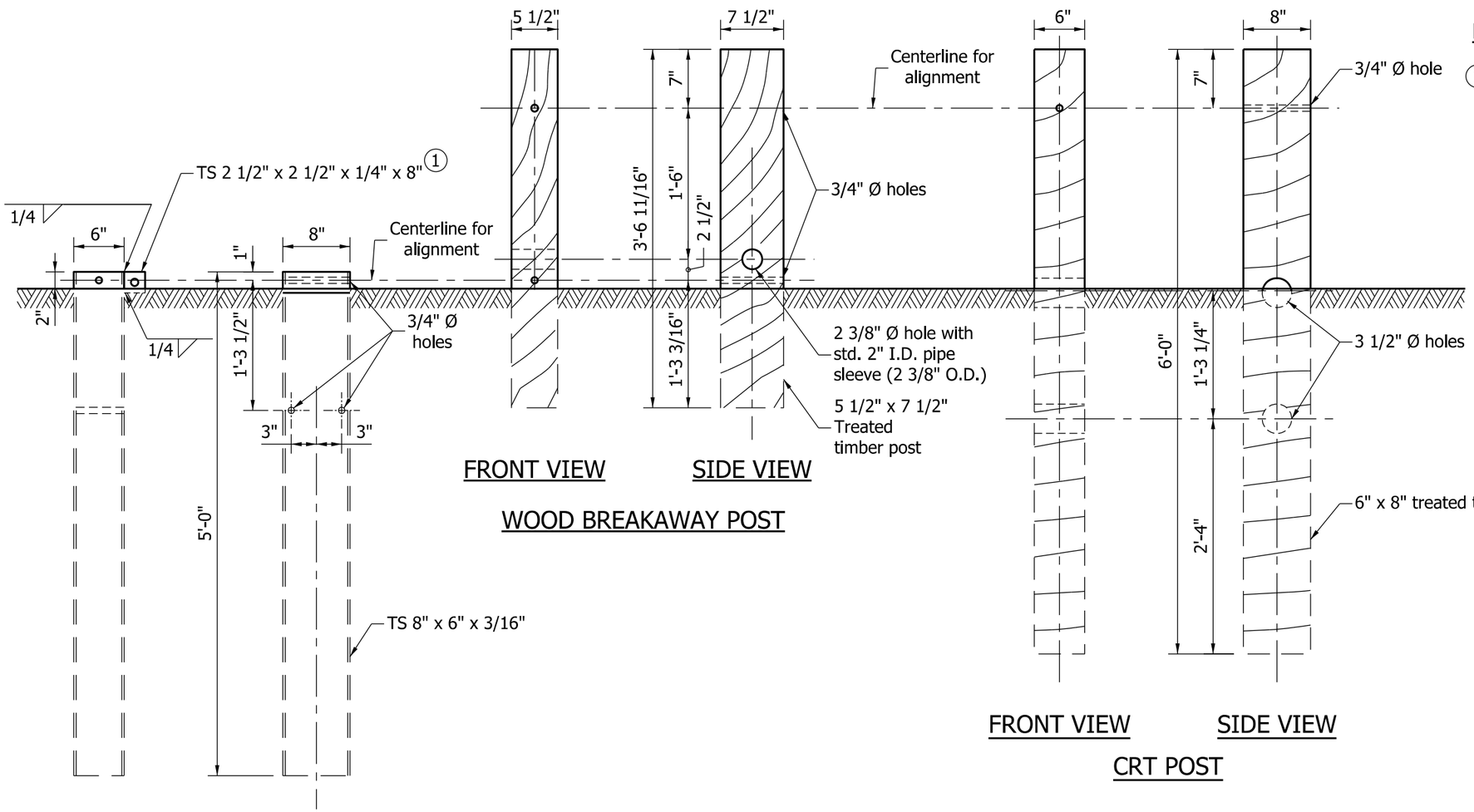

NOTE:

① The TS 2 1/2" x 2 1/2" structural tube shall be welded to Post B only. See Standard Drawing E 601-CWGS-04 for location of Post B.

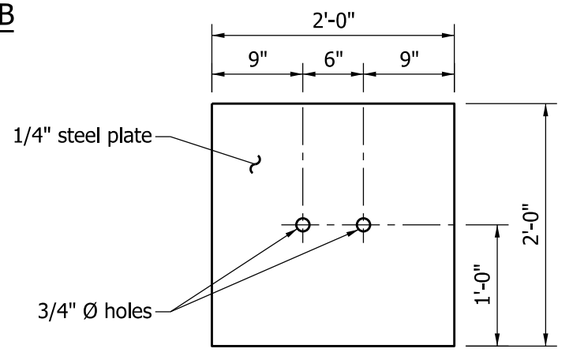

SOIL PLATE

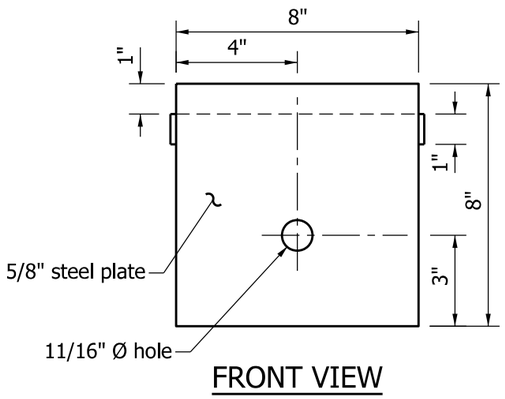

FRONT VIEW

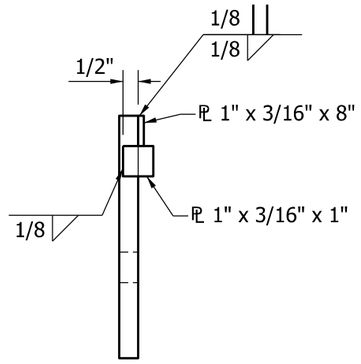

SIDE VIEW

BEARING PLATE

INDIANA DEPARTMENT OF TRANSPORTATION

CURVED W-BEAM GUARDRAIL SYSTEM

SEPTEMBER 2011

STANDARD DRAWING NO. E 601-CWGS-06

RICHARD L. VanCLEAVE REGISTERED No. 9750 STATE OF INDIANA PROFESSIONAL ENGINEER

DETAILS PLACED IN THIS FORMAT 09/04/12

/s/ Richard L. VanCleave 09/04/12

SUPERVISOR, ROADWAY STANDARDS DATE

/s/ Mark A. Miller 09/04/12

CHIEF ENGINEER DATE

NOTES

1. See Standard Drawing E 601-CWGS-03 for other General Notes.
2. See Standard Drawing E 601-CWGS-01 for Table CWGS-1.

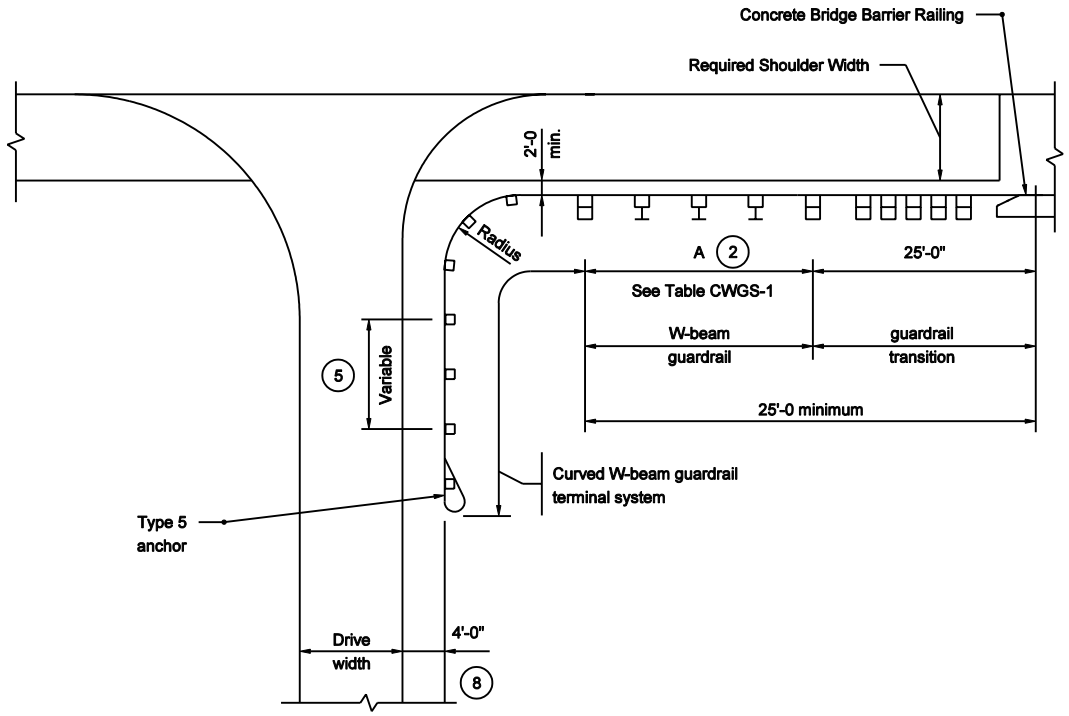

DRIVE INSTALLATION FOR W-BEAM GUARDRAIL AT BRIDGE END

INDIANA DEPARTMENT OF TRANSPORTATION

CURVED W-BEAM GUARDRAIL TERMINAL SYSTEM

SEPTEMBER 2003

STANDARD DRAWING NO. E 601-CWGT-01

RICHARD L. VANCLEAVE REGISTERED No. 9750 STATE OF INDIANA PROFESSIONAL ENGINEER

DESIGN STANDARDS ENGINEER

/s/ Richard L. VanCleave 9-02-03
DESIGN STANDARDS ENGINEER DATE

/s/ Richard K. Smutzer 9-02-03
CHIEF HIGHWAY ENGINEER DATE

NOTES:

1. When the face of the guardrail is offset 0'-0 or 1'-0 from the edge of the paved shoulder, the width of the drive shoulder,S, must be increased to maintain the 4'-0 minimum distance between the face of the guardrail and the edge of the drive.
2. For mainline paved shoulder widths equal to or greater than 8'-0 the drive radii should be referenced from the edge of the mainline paved shoulder rather than as shown
3. See Standard Drawing E 601-CWGS-03 for other General Notes.

TABLE CWGS-1	
DRIVE SHOULDER WIDTH FOR 25' RADIUS	
MAINLINE PAVED SHOULDER WIDTH	DRIVE SHOULDER WIDTH S
10'	5'-0
8'	6'-3
6'	7'-6

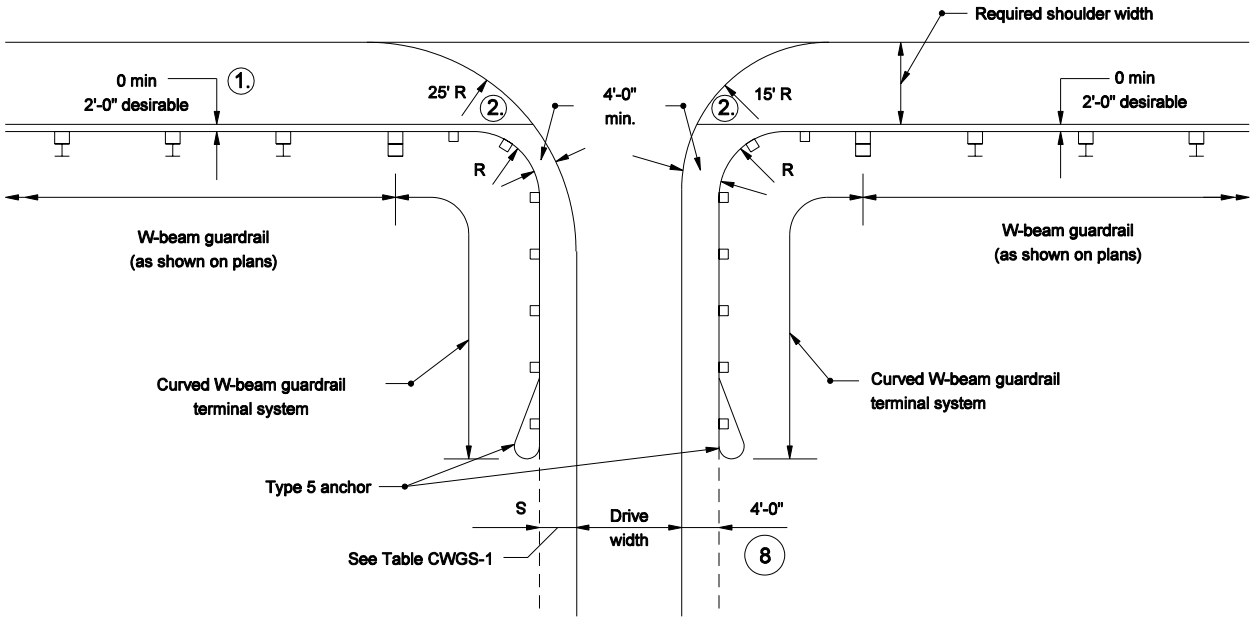

DRIVE INSTALLATION FOR
W-BEAM GUARDRAIL RUN

INDIANA DEPARTMENT OF TRANSPORTATION

CURVED W- BEAM GUARDRAIL TERMINAL SYSTEM

MARCH 2004

STANDARD DRAWING NO. E 601-CWGT-02

RICHARD L. VanCLEAVE REGISTERED No. 9750 STATE OF INDIANA PROFESSIONAL ENGINEER

DESIGN STANDARDS ENGINEER

/s/ Richard L. VanCleave 3-01-04
DESIGN STANDARDS ENGINEER DATE

/s/ Richard K. Smutzer 3-01-04
CHIEF HIGHWAY ENGINEER DATE

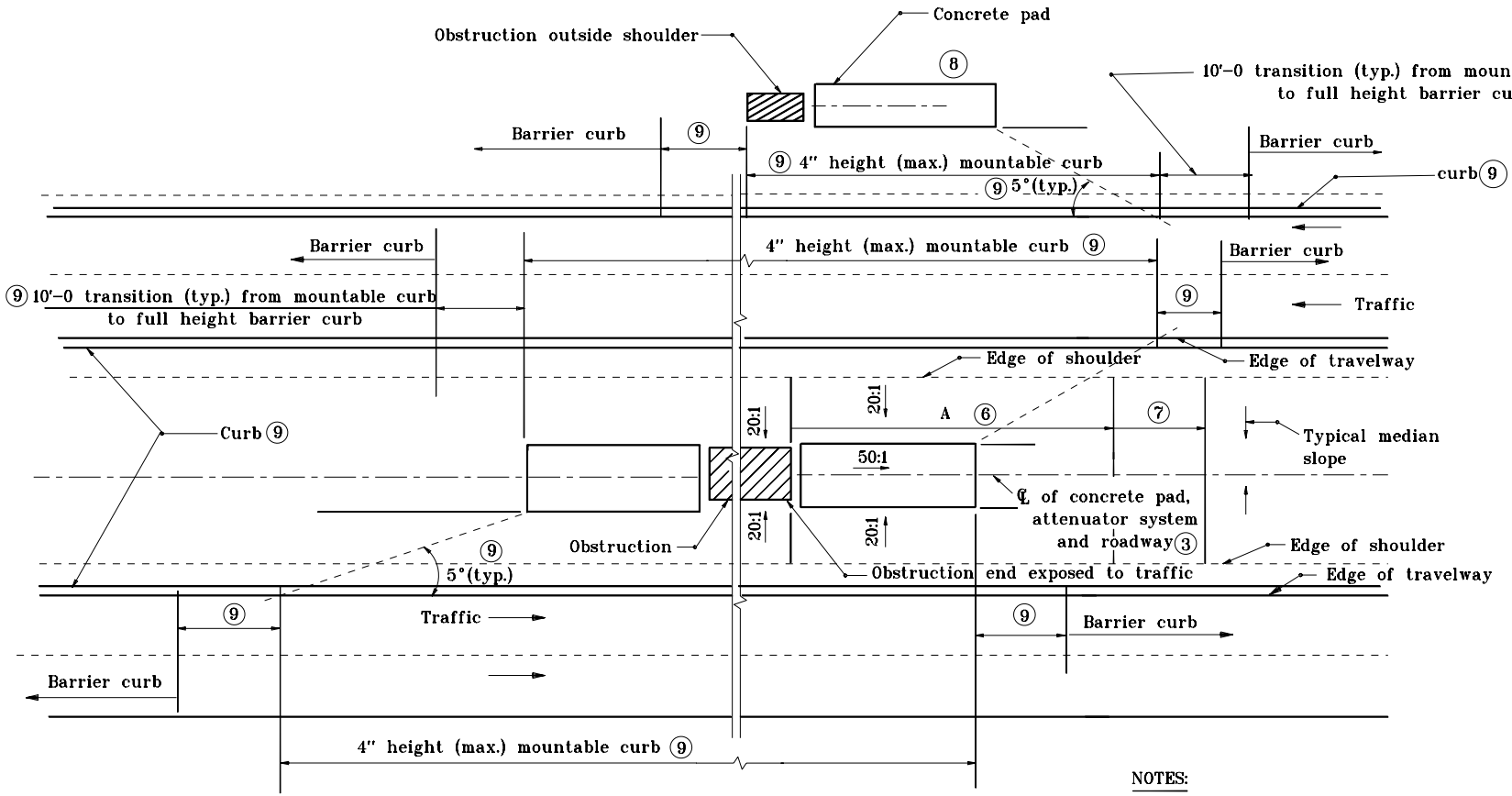

ALIGNMENT OF ATTENUATOR, PAD AND ROADWAY

NOTES:

1. See Standard Drawing E 601–GAIA–01A for notes.

Distance A			Comment
Test Level 3	Test Level 2	Test Level 1	
148'–0	132'–0	100'–0 Desirable	Use appropriate designated impact attenuator test level

INDIANA DEPARTMENT OF TRANSPORTATION

GRADING AT MEDIAN IMPACT ATTENUATOR

MARCH 2002

STANDARD DRAWING NO. **E 601–GAIA–01**

RICHARD L. VanCLEAVE REGISTERED No. 9750 STATE OF INDIANA PROFESSIONAL ENGINEER

DESIGN STANDARDS ENGINEER

/s/ Richard L. VanCleave 3–01–02
DESIGN STANDARDS ENGINEER — DATE

/s/ Richard K. Smutzer 3–01–02
CHIEF HIGHWAY ENGINEER — DATE

NOTES:

1. The pad and grading details shown on these drawings shall be used as applicable to the attenuator system required for either or both ends of the obstruction.

2. Contractor shall follow manufacturer's recommendations for actual pad size for a particular impact attenuator system.

(3) Align the centerline of attenuator system parallel to centerline of the roadway. A maximum angle of 5°, as measured between the longitudinal centerline of the roadway and an impact attenuator system type ED is allowed for the gravel barrel array. See Standard Drawing E 601-IAED-01 for gravel barrel layout and pad size.

4. Variation in transverse slope over the length of the pad shall not exceed 2%.

5. Attenuator system including pad shall not encroach on usable shoulder of the roadway.

(6) Longitudinal downward slope shall be 20:1 maximum.

(7) Longitudinal transition slope shall be a maximum of 10:1 downward.

(8) For a concrete pad adjacent to the outside shoulder area, a distance of 3'-3 beyond the far edge of concrete pad from the travel lane shall be sloped 20:1 before gradual transition to existing slope.

(9) Transition from full height barrier curb to mountable curb shall be provided where barrier curb exists or is planned.

INDIANA DEPARTMENT OF TRANSPORTATION

GRADING AT MEDIAN IMPACT ATTENUATOR

MARCH 2002

STANDARD DRAWING NO. **E 601-GAIA-01A**

RICHARD L. VanCLEAVE REGISTERED No. 9750 STATE OF INDIANA PROFESSIONAL ENGINEER

DESIGN STANDARDS ENGINEER

/s/ Richard L. VanCleave 3-01-02
DESIGN STANDARDS ENGINEER — DATE

/s/ Richard K. Smutzer 3-01-02
CHIEF HIGHWAY ENGINEER — DATE

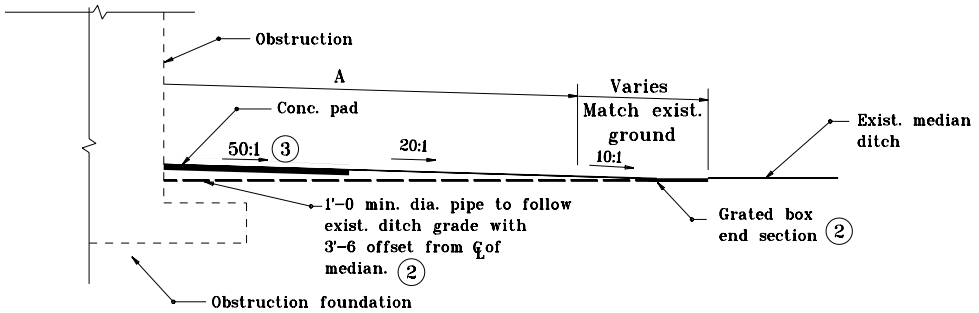

LONGITUDINAL SECTION

Distance A			Comment
Test Level 3	Test Level 2	Test Level 1	
148'–0	132'–0	100'–0 Desirable	Use appropriate designated impact attenuator test level

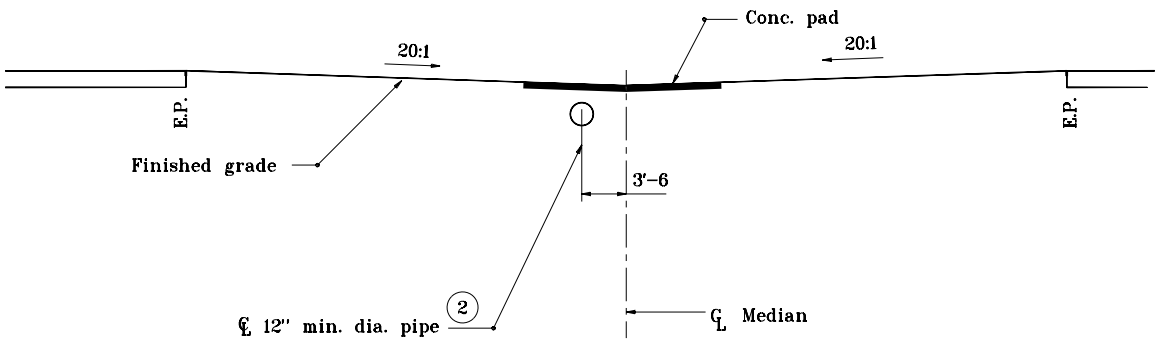

MEDIAN SECTION AT PAD

NOTES:

1. All slopes from the edge of shoulder to the center of the median and distance A upstation and downstation of the obstruction shall be sloped at 20:1 maximum.

(2) Median drainage is to be determined by field inspection. If drainage is required, a 12" min. grated box end section type II, slope 10:1, and a 12" min. type 1 pipe shall be used.

(3) Concrete pad slope

INDIANA DEPARTMENT OF TRANSPORTATION

GRADING AT MEDIAN IMPACT ATTENUATOR

MARCH 2002

STANDARD DRAWING NO. **E 601-GAIA-02**

RICHARD L. VanCLEAVE REGISTERED No. 9750 STATE OF INDIANA PROFESSIONAL ENGINEER

DESIGN STANDARDS ENGINEER

/s/ Richard L. VanCleave 3-01-02
DESIGN STANDARDS ENGINEER — DATE

/s/ Richard K. Smutzer 3-01-02
CHIEF HIGHWAY ENGINEER — DATE

LEGEND

1. Obstruction
2. Impact attenuator pad, transversely as level as conditions permit, maximum slope 20:1. Longitudinally sloping 20:1 maximum, with respect to roadway grade.
3. Shoulder slope 4% toward obstruction/impact attenuator pad/swale.
4. Transition slope 10:1 maximum transversely.
5. Slope as needed, 20:1 desirable, 10:1 maximum.
6. 20:1 desirable, 10:1 maximum.

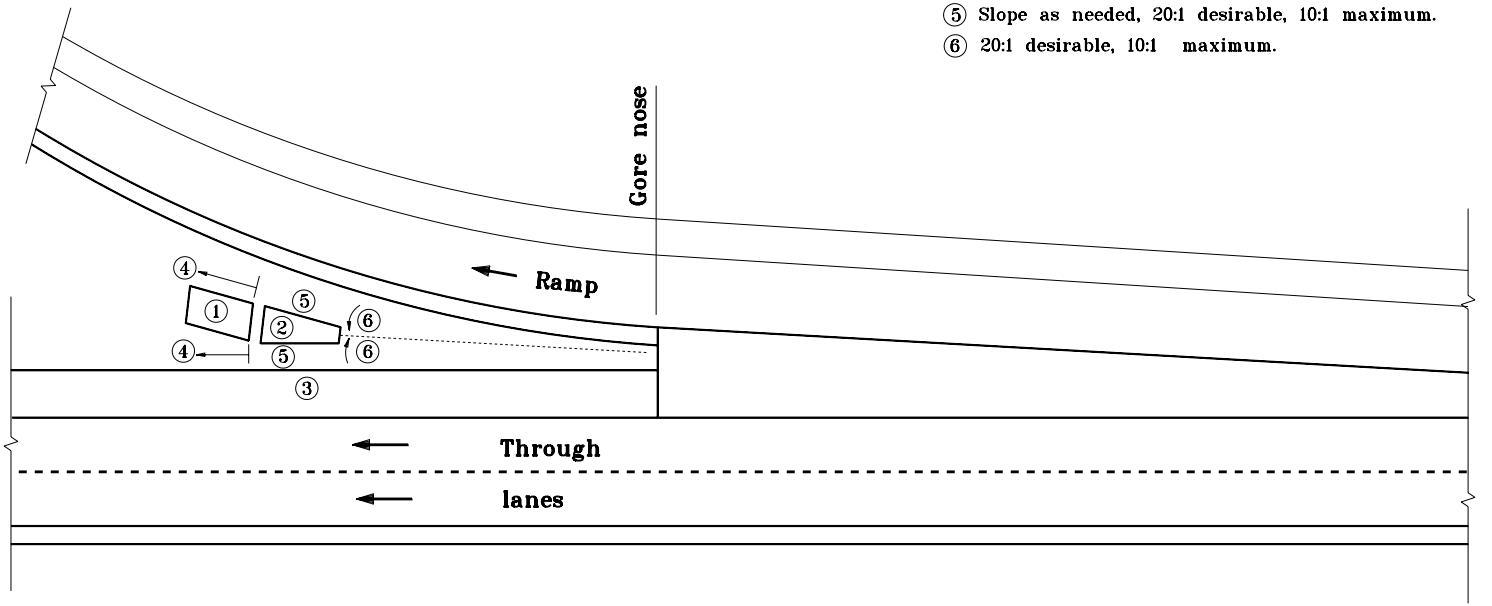

INDIANA DEPARTMENT OF TRANSPORTATION

GRADING AT IMPACT ATTENUATOR IN GORE AREA

MARCH 2002

STANDARD DRAWING NO. **E 601-GAIA-03**

RICHARD L. VanCLEAVE REGISTERED No. 9750 STATE OF INDIANA PROFESSIONAL ENGINEER

DESIGN STANDARDS ENGINEER

/s/ Richard L. VanCleave 3-01-02
DESIGN STANDARDS ENGINEER — DATE

/s/ Richard K. Smutzer 3-01-02
CHIEF HIGHWAY ENGINEER — DATE

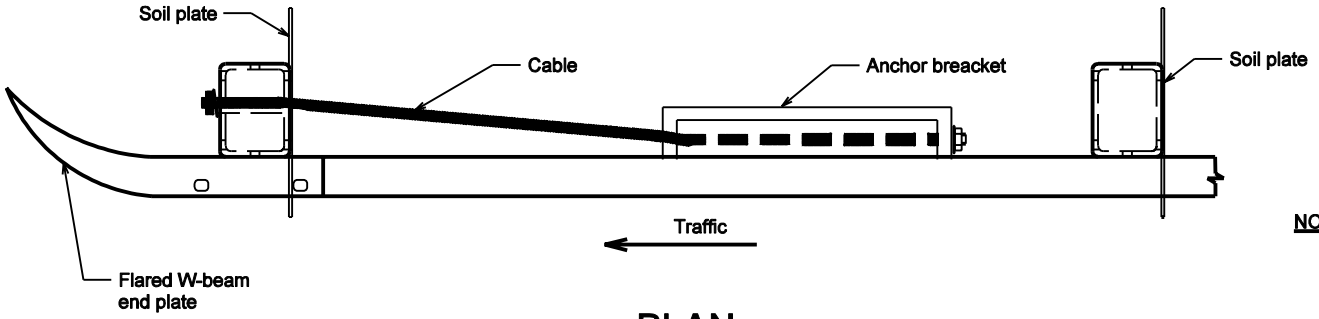

PLAN

NOTES :

1. See Standards Drawing E 601-GCTA-02 for Details A and B.

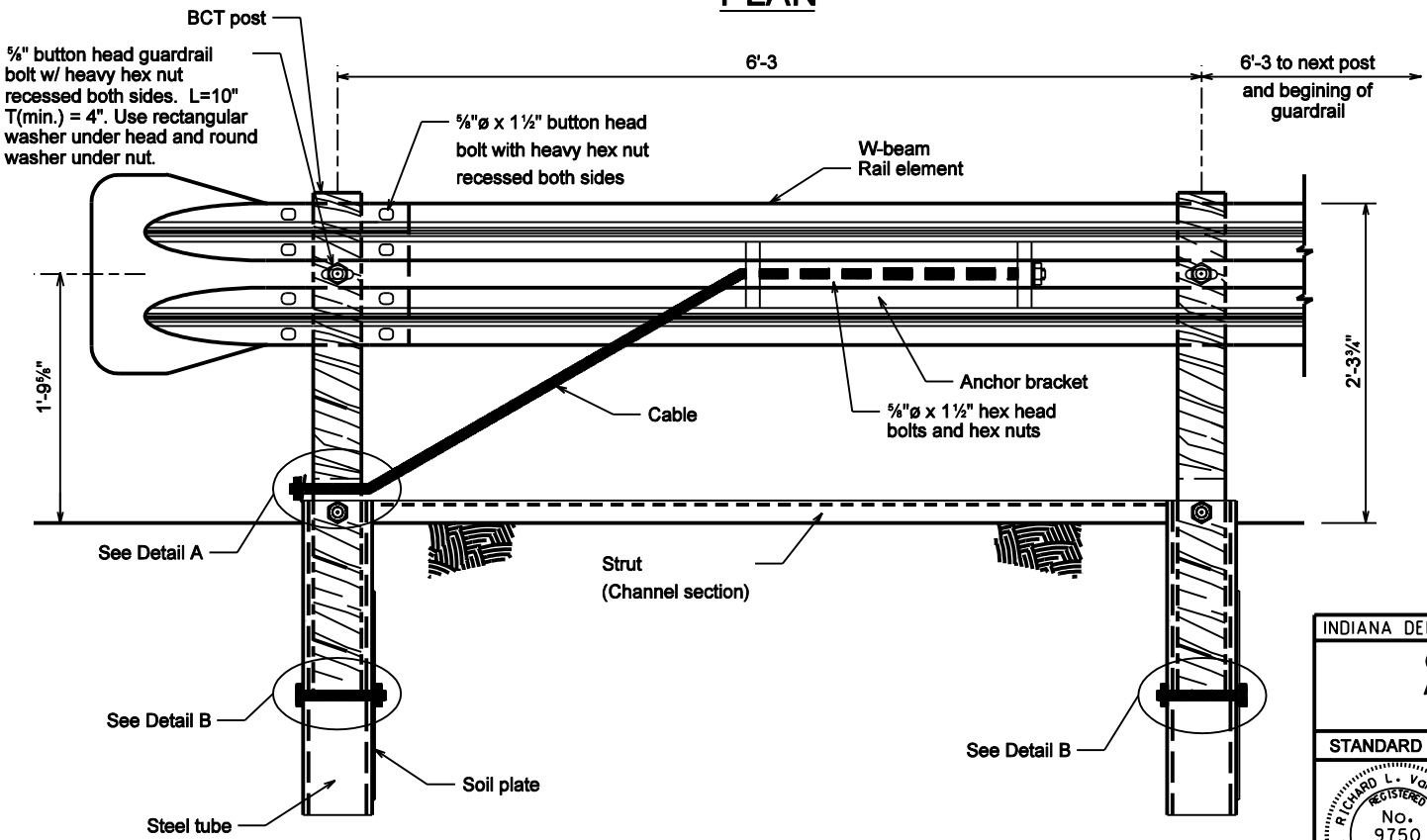

ELEVATION

INDIANA DEPARTMENT OF TRANSPORTATION

CABLE TERMINAL ANCHOR SYSTEM

SEPTEMBER 2001

STANDARD DRAWING NO. E 601-GCTA-01

RICHARD L. VanCLEAVE REGISTERED No. 9750 STATE OF INDIANA PROFESSIONAL ENGINEER

DESIGN STANDARDS ENGINEER

/s/ Richard L. VanCleave 9-04-01
DESIGN STANDARDS ENGINEER DATE

/s/ Firooz Zandi 9-04-01
CHIEF HIGHWAY ENGINEER DATE

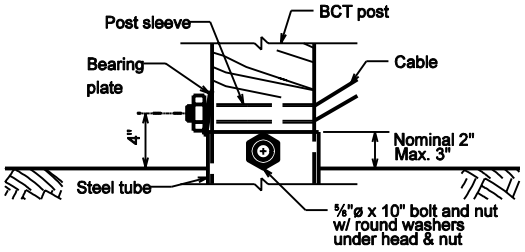

DETAIL A

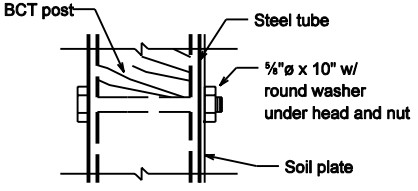

DETAIL B

INDIANA DEPARTMENT OF TRANSPORTATION

CABLE TERMINAL ANCHOR SYSTEM

SEPTEMBER 2001

STANDARD DRAWING NO. E 601-GCTA-02

RICHARD L. VanCLEAVE REGISTERED No. 9750 STATE OF Indiana PROFESSIONAL ENGINEER

DESIGN STANDARDS ENGINEER

/s/ Richard L. VanCleave 9-04-01
DESIGN STANDARDS ENGINEER DATE

/s/ Firooz Zandi 9-04-01
CHIEF HIGHWAY ENGINEER DATE

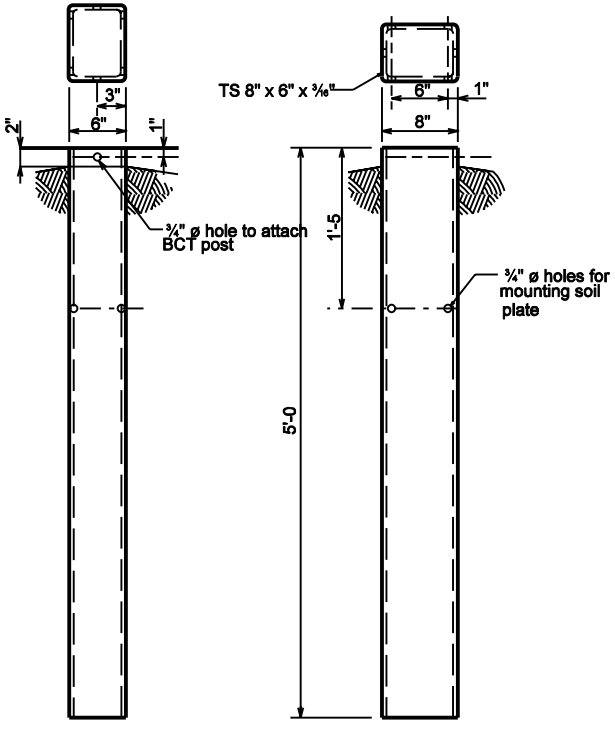

FRONT SIDE

GALVANIZED STEEL FOUNDATION TUBE

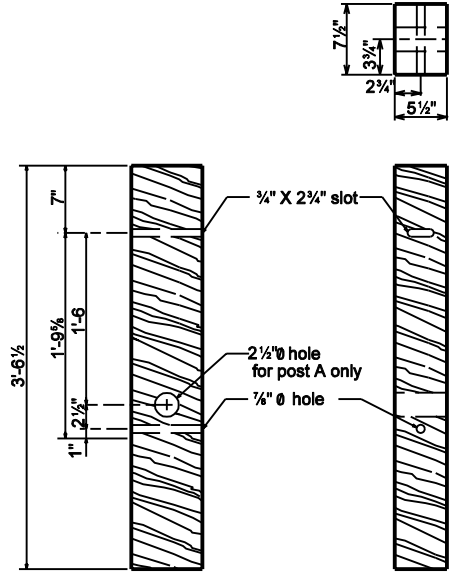

SIDE FRONT

BCT TIMBER POST

INDIANA DEPARTMENT OF TRANSPORTATION

CABLE TERMINAL ANCHOR SYSTEM

SEPTEMBER 2001

STANDARD DRAWING NO. E 601-GCTA-03

RICHARD L. VORCLEAVE REGISTERED No. 9750 STATE OF INDIANA PROFESSIONAL ENGINEER

DESIGN STANDARDS ENGINEER

/s/ Richard L. VorCleave 9-04-01
DESIGN STANDARDS ENGINEER DATE

/s/ Firooz Zandi 9-04-01
CHIEF HIGHWAY ENGINEER DATE

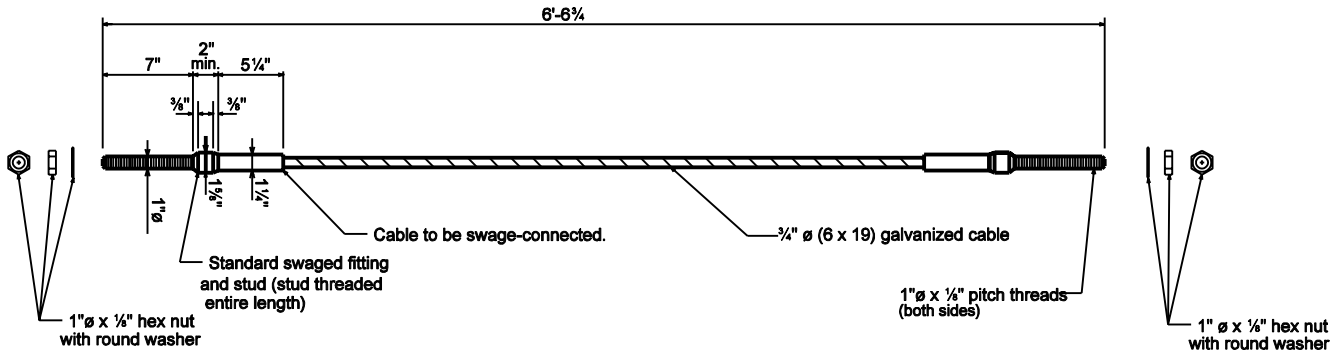

BCT CABLE ANCHOR ASSEMBLY

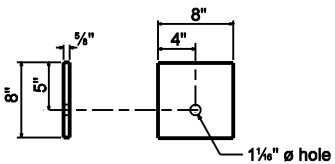

BCT BEARING PLATE

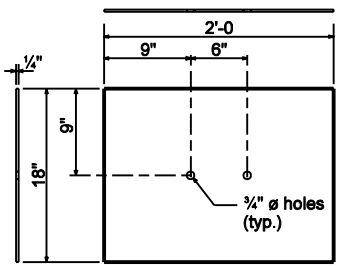

FOUNDATION TUBE SOIL PLATE

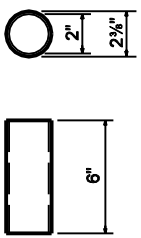

BCT POST SLEEVE

INDIANA DEPARTMENT OF TRANSPORTATION

CABLE TERMINAL ANCHOR SYSTEM

SEPTEMBER 2001

STANDARD DRAWING NO. E 601-GCTA-04

ANTHONY L. UREMOVICH REGISTERED No. 18095 STATE OF INDIANA PROFESSIONAL ENGINEER

DESIGN STANDARDS ENGINEER

/s/ Anthony L Uremovich 9-04-01
DESIGN STANDARDS ENGINEER DATE

/s/ Firooz Zandi 9-04-01
CHIEF HIGHWAY ENGINEER DATE

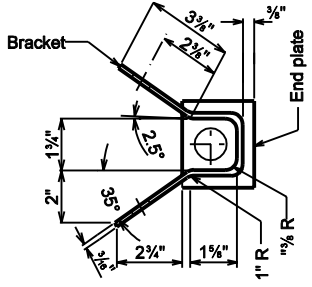

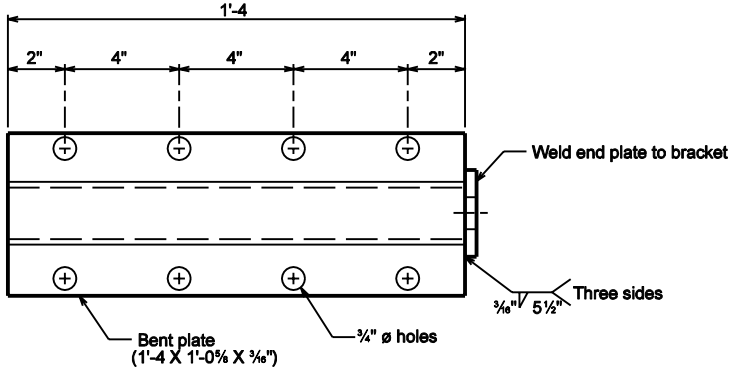

BRACKET

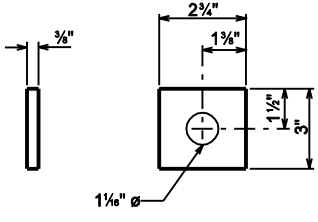

END PLATE

GUARDRAIL ANCHOR BRACKET

INDIANA DEPARTMENT OF TRANSPORTATION

CABLE TERMINAL ANCHOR SYSTEM

SEPTEMBER 2001

STANDARD DRAWING NO. E 601-GCTA-05

RICHARD L. VANCLEAVE REGISTERED No. 9750 STATE OF INDIANA PROFESSIONAL ENGINEER

DESIGN STANDARDS ENGINEER

/s/ Richard L.VanCleave 9-04-01
DESIGN STANDARDS ENGINEER DATE

/s/ Firooz Zondi 9-04-01
CHIEF HIGHWAY ENGINEER DATE

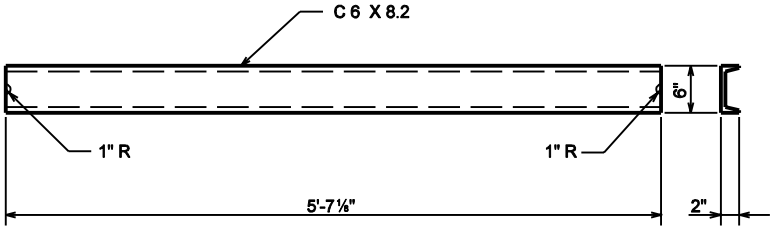

STRUT DETAILS

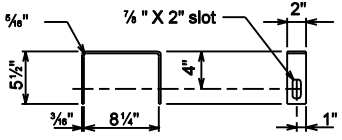

YOKE DETAILS
(2 required)

STRUT AND YOKE ASSEMBLY

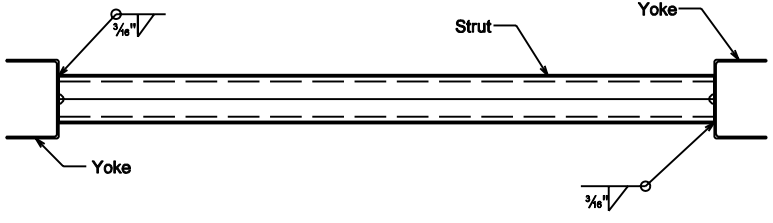

ASSEMBLY DETAILS

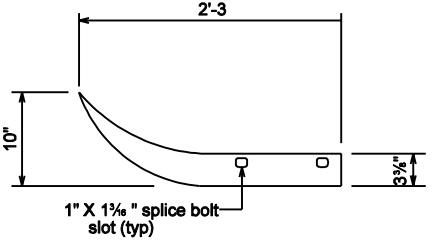

PLAN

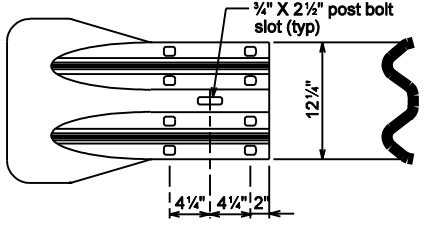

ELEVATION

FLARED W-BEAM END SECTION

INDIANA DEPARTMENT OF TRANSPORTATION

CABLE TERMINAL ANCHOR SYSTEM

SEPTEMBER 2001

STANDARD DRAWING NO. E 601-GCTA-06

RICHARD L. VONCLEAVE REGISTERED No. 9750 STATE OF INDIANA PROFESSIONAL ENGINEER
DESIGN STANDARDS ENGINEER

/s/ Richard L.VonCleave 9-04-01
DESIGN STANDARDS ENGINEER DATE

/s/ Firooz Zandi 9-04-01
CHIEF HIGHWAY ENGINEER DATE

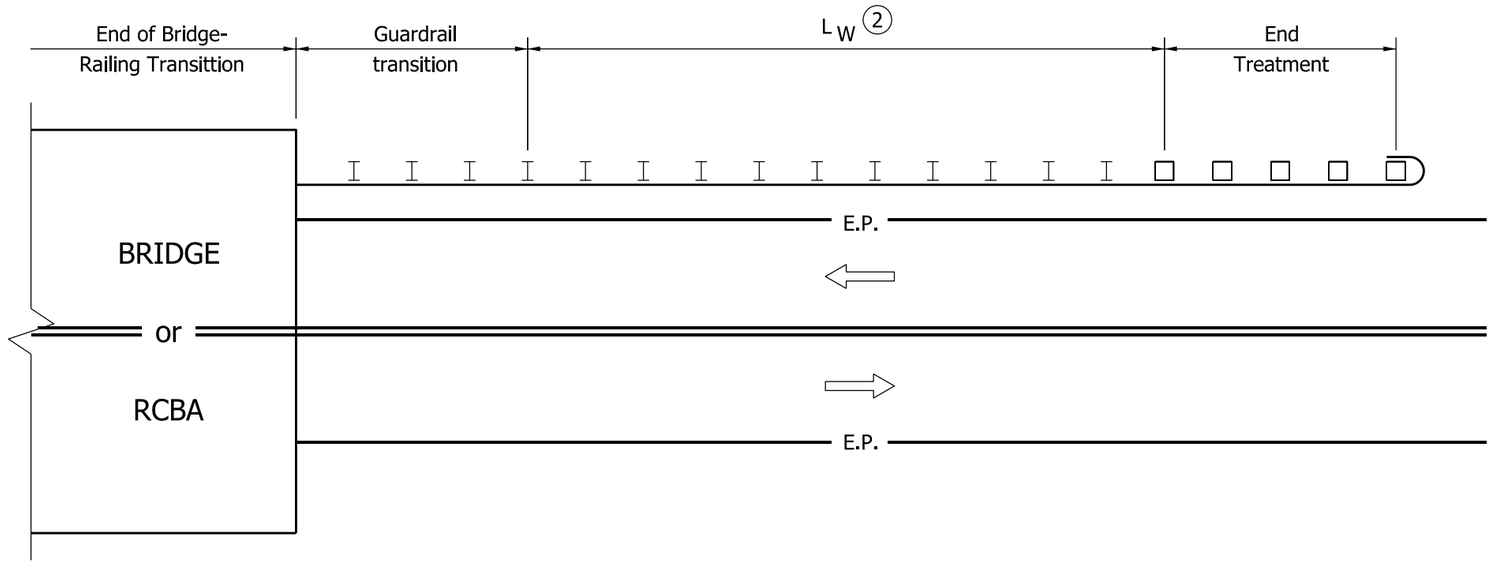

NOTES:

1. This configuration shall be used where W-beam guardrail is specified as the bridge-approach guardrail, and is connected to the bridge railing with guardrail transition type TGB. It shall be typical for all four corners.

(2) L_w = length shown on plans of W-beam guardrail at 6'-3" post spacing. ft.

INDIANA DEPARTMENT OF TRANSPORTATION

BRIDGE-APPROACH
GUARDRAIL
2-LANE 2-WAY ROADWAY
SEPTEMBER 2011

STANDARD DRAWING NO. E 601-GRBA-01

RICHARD L. VanCLEAVE REGISTERED No. 9750 STATE OF INDIANA PROFESSIONAL ENGINEER

DESIGN STANDARDS ENGINEER

/s/ Richard L. VanCleave 09/01/11
DESIGN STANDARDS ENGINEER DATE

/s/ Mark A. Miller 09/01/11
CHIEF HIGHWAY ENGINEER DATE

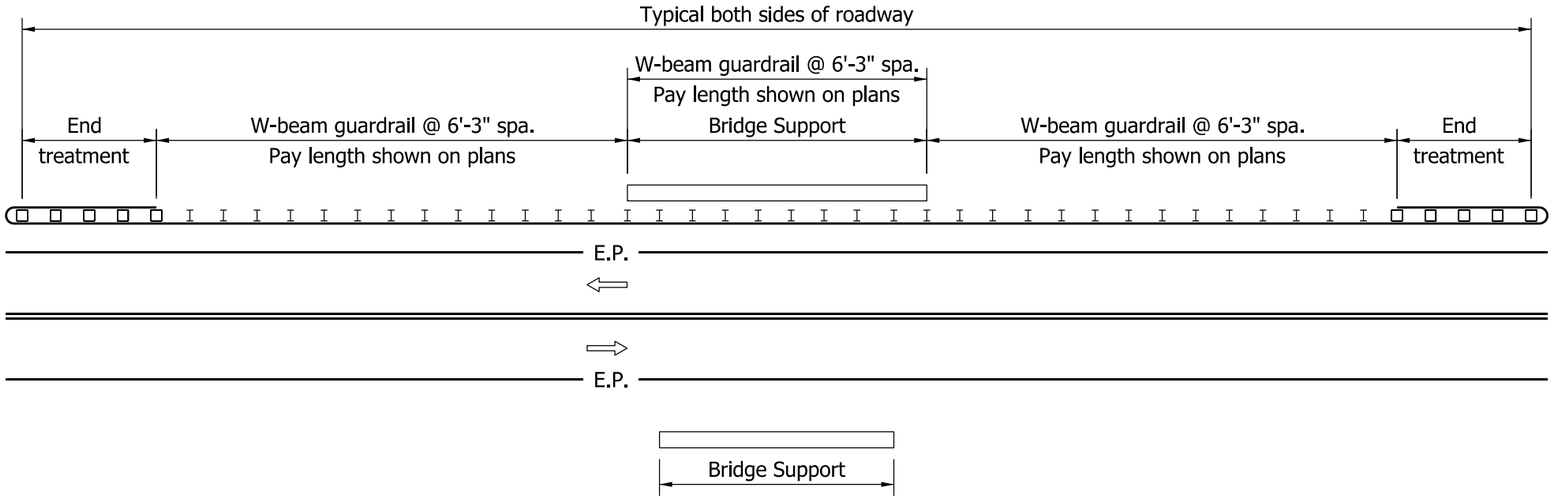

TWO-LANE TWO-WAY ROADWAY WITH SINGLE OVERHEAD STRUCTURE AND BRIDGE-SUPPORT DISTANCE TO E.P.> 16'

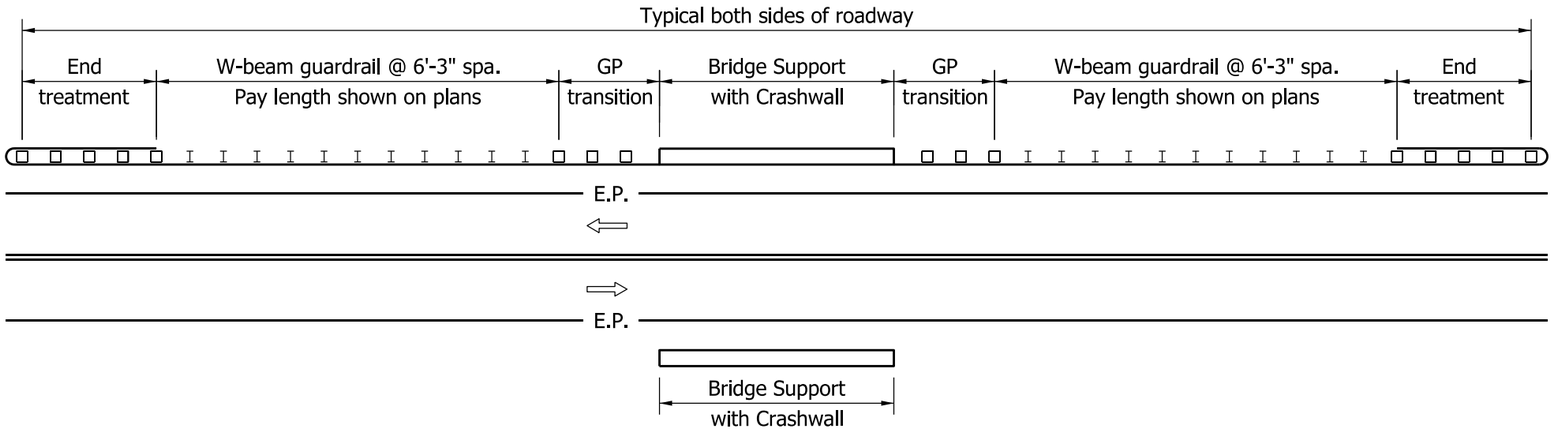

TWO-LANE TWO-WAY ROADWAY WITH SINGLE OVERHEAD STRUCTURE AND BRIDGE-SUPPORT DISTANCE TO E.P. ≤ 16'

NOTES:

1. This configuration shall be used where W-beam guardrail is specified along a two-lane two-way roadway to shield the supports of an overhead structure.
2. Dimensions and details not shown hereon shall be as shown on the plans.

INDIANA DEPARTMENT OF TRANSPORTATION

GUARDRAIL AT ROADSIDE
BRIDGE SUPPORT

SEPTEMBER 2011

STANDARD DRAWING NO. E 601-GRBS-01

RICHARD L. VanCLEAVE
REGISTERED
No. 9750
STATE OF INDIANA
PROFESSIONAL ENGINEER

DESIGN STANDARDS ENGINEER

/s/ Richard L. VanCleave 09/01/11
DESIGN STANDARDS ENGINEER DATE

/s/ Mark A. Miller 09/01/11
CHIEF HIGHWAY ENGINEER DATE

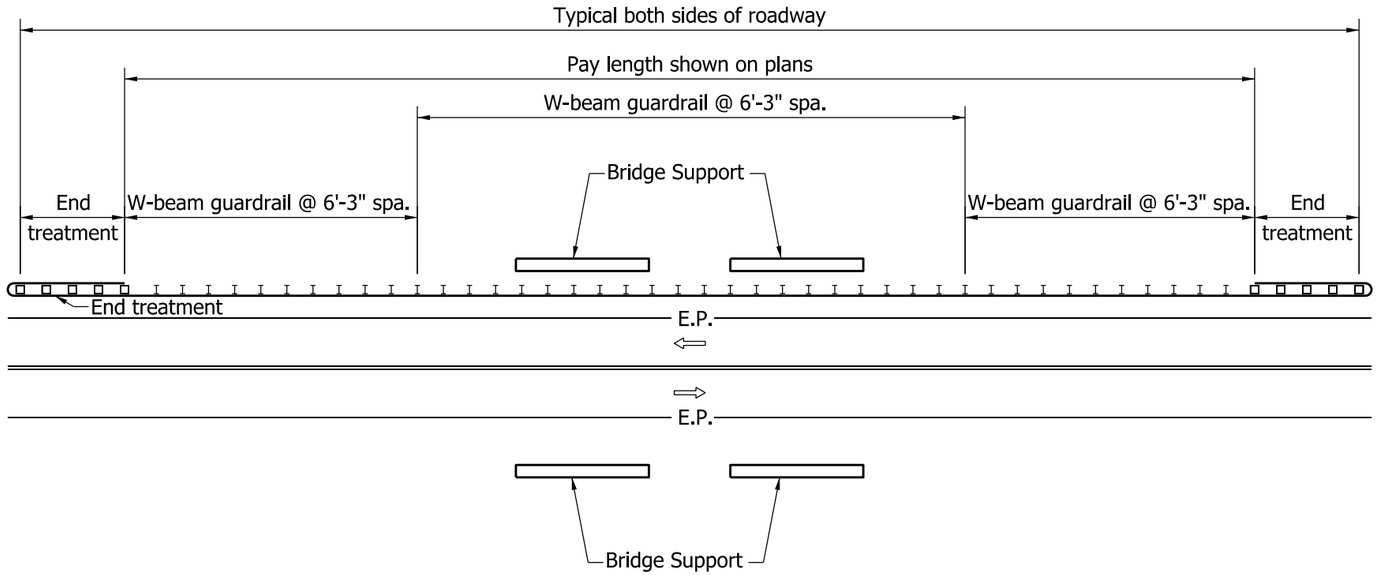

TWO-LANE TWO-WAY ROADWAY WITH TWIN OVERHEAD STRUCTURES AND BRIDGE-SUPPORT DISTANCE TO E.P.> 16'

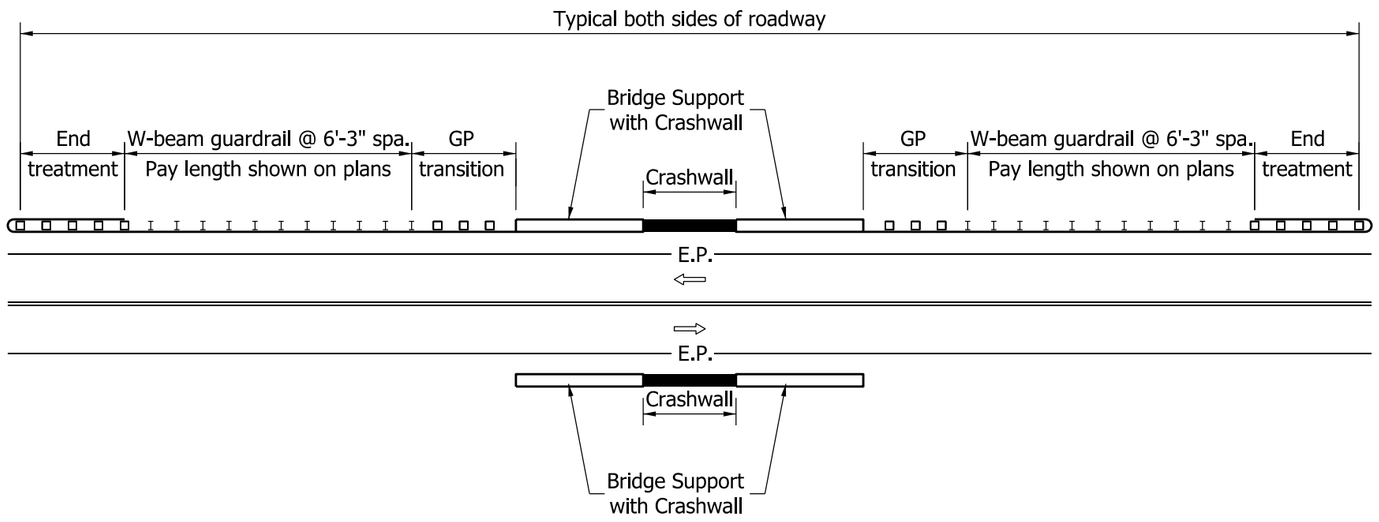

TWO-LANE TWO-WAY ROADWAY WITH TWIN OVERHEAD STRUCTURES AND BRIDGE-SUPPORT DISTANCE TO E.P. ≤ 16'

NOTES:

1. This configuration shall be used where W-beam guardrail is specified along a two-lane two-way roadway to shield the supports of twin overhead structures.

2. Dimensions and details not shown hereon shall be as shown on the plans.

INDIANA DEPARTMENT OF TRANSPORTATION

GUARDRAIL AT ROADSIDE
BRIDGE SUPPORTS

SEPTEMBER 2011

STANDARD DRAWING NO. E 601-GRBS-02

RICHARD L. VanCLEAVE
REGISTERED
No. 9750
STATE OF INDIANA
PROFESSIONAL ENGINEER

DESIGN STANDARDS ENGINEER

/s/ Richard L. VanCleave 09/01/11
DESIGN STANDARDS ENGINEER DATE

/s/ Mark A. Miller 09/01/11
CHIEF HIGHWAY ENGINEER DATE

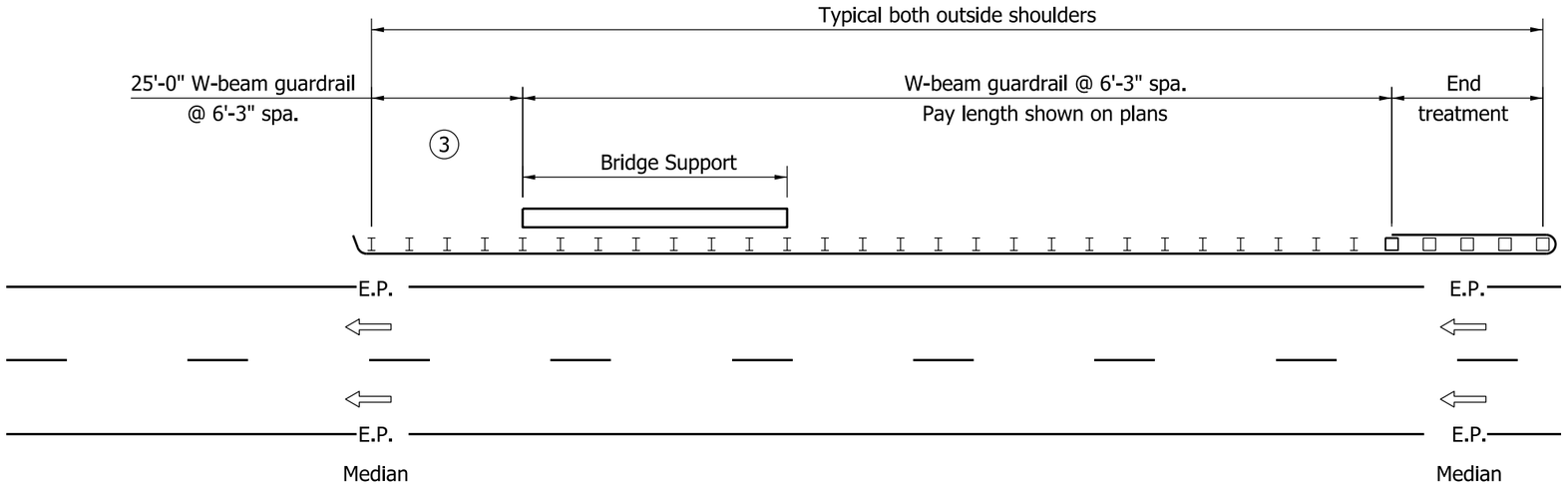

DIVIDED ROADWAY WITH SINGLE OVERHEAD STRUCTURE AND OUTSIDE SHOULDER BRIDGE-SUPPORT DISTANCE TO E.P. > 16'

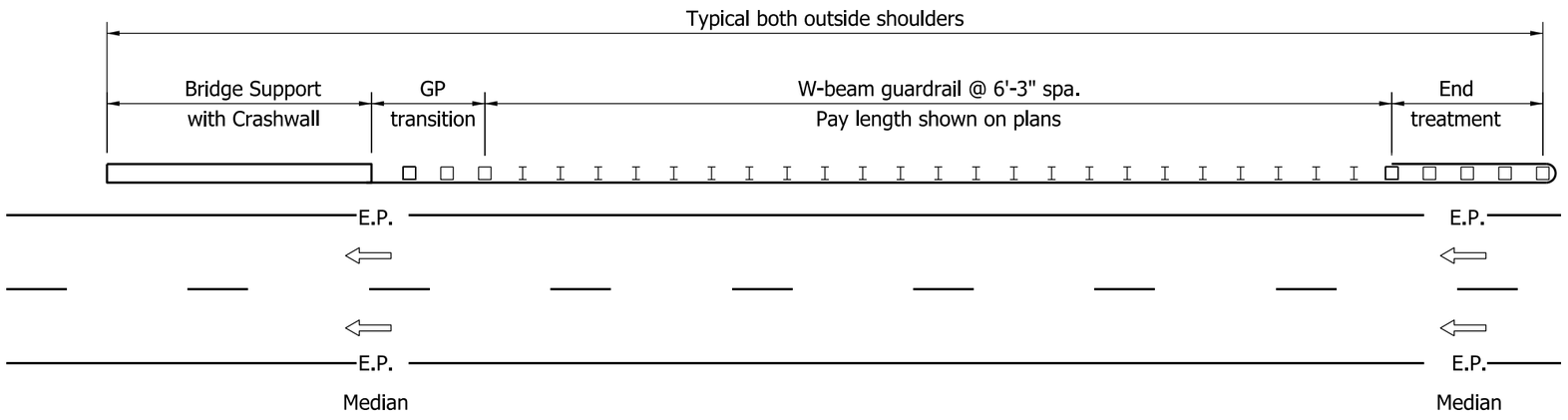

DIVIDED ROADWAY WITH SINGLE OVERHEAD STRUCTURE AND OUTSIDE SHOULDER BRIDGE-SUPPORT DISTANCE TO E.P. ≤ 16'

NOTES:

1. This configuration shall be used where W-beam guardrail is specified along the outside shoulder of a divided roadway to shield the supports of an overhead structure.
2. Dimensions and details not shown hereon shall be as shown on the plans.

(3) Rectangular plate washers shall be installed at each post along this section. See Standard Drawing E 601-GRBS-08.

INDIANA DEPARTMENT OF TRANSPORTATION

GUARDRAIL AT ROADSIDE
BRIDGE SUPPORT

SEPTEMBER 2011

STANDARD DRAWING NO. E 601-GRBS-03

RICHARD L. VanCLEAVE REGISTERED No. 9750 STATE OF INDIANA PROFESSIONAL ENGINEER

DESIGN STANDARDS ENGINEER

/s/ Richard L. VanCleave 09/01/11
DESIGN STANDARDS ENGINEER DATE

/s/ Mark A. Miller 09/01/11
CHIEF HIGHWAY ENGINEER DATE

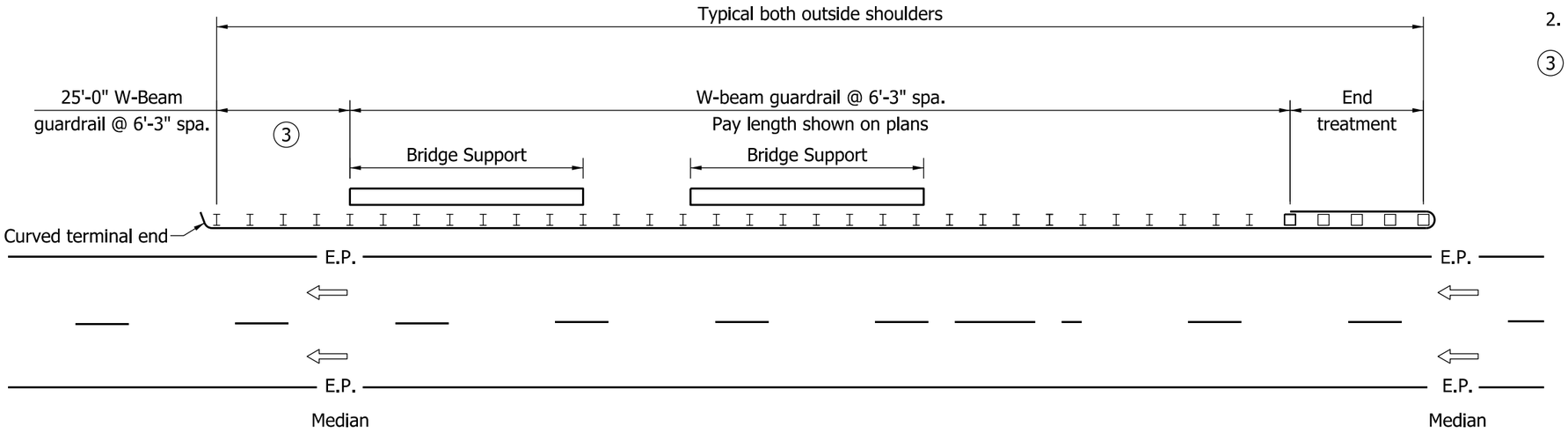

DIVIDED ROADWAY WITH TWIN OVERHEAD STRUCTURES AND OUTSIDE-SHOULDER BRIDGE-SUPPORT DISTANCE TO E.P. > 16'

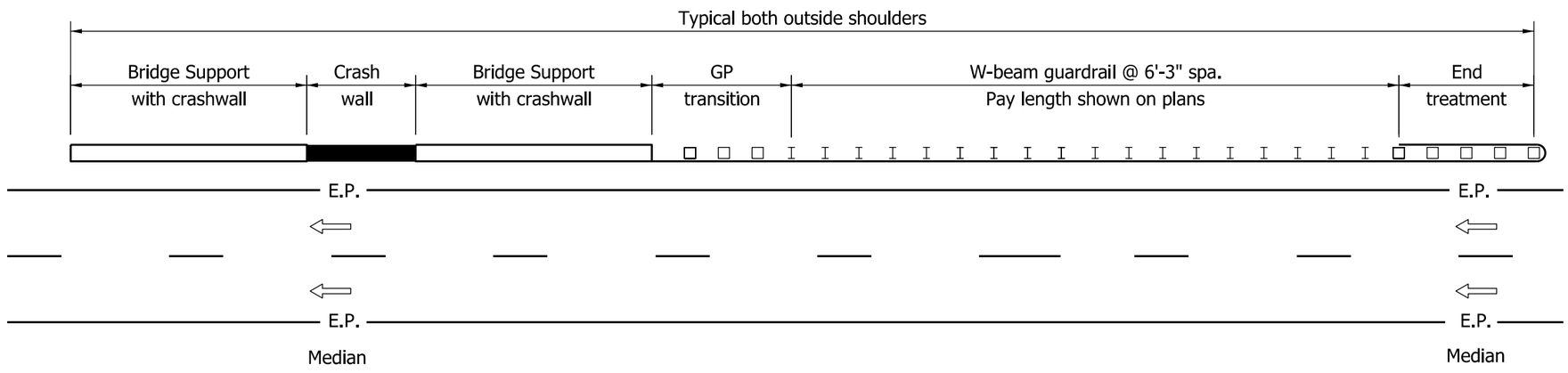

DIVIDED ROADWAY WITH TWIN OVERHEAD STRUCTURES AND OUTSIDE-SHOULDER BRIDGE-SUPPORT DISTANCE TO E.P. ≤ 16'

NOTES:

1. This configuration shall be used where W-beam guardrail is specified along the outside shoulder of a divided roadway to shield the supports of twin overhead structures.
2. Dimensions and details not shown hereon shall be as shown on the plans.

(3) Rectangular plate washers shall be installed at each post along this section. See Standard Drawing E 601-GRBS-08.

INDIANA DEPARTMENT OF TRANSPORTATION

GUARDRAIL AT ROADSIDE
BRIDGE SUPPORTS

SEPTEMBER 2011

STANDARD DRAWING NO. E 601-GRBS-04

RICHARD L. VanCLEAVE REGISTERED No. 9750 STATE OF INDIANA PROFESSIONAL ENGINEER

DESIGN STANDARDS ENGINEER

/s/ Richard L. VanCleave 09/01/11
DESIGN STANDARDS ENGINEER DATE

/s/ Mark A. Miller 09/01/11
CHIEF HIGHWAY ENGINEER DATE

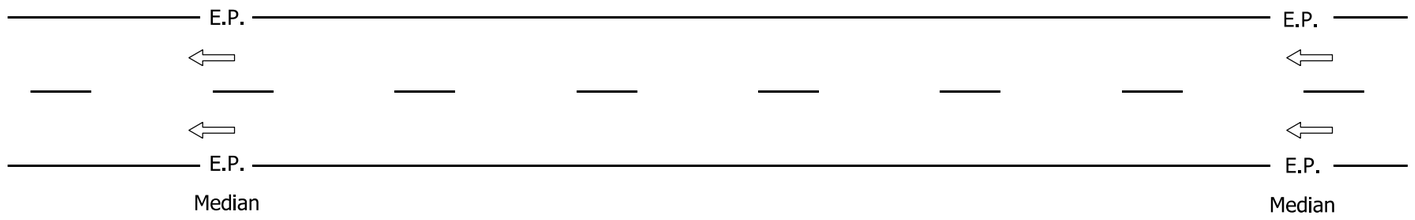

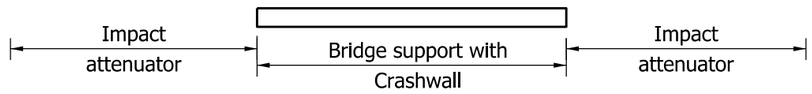

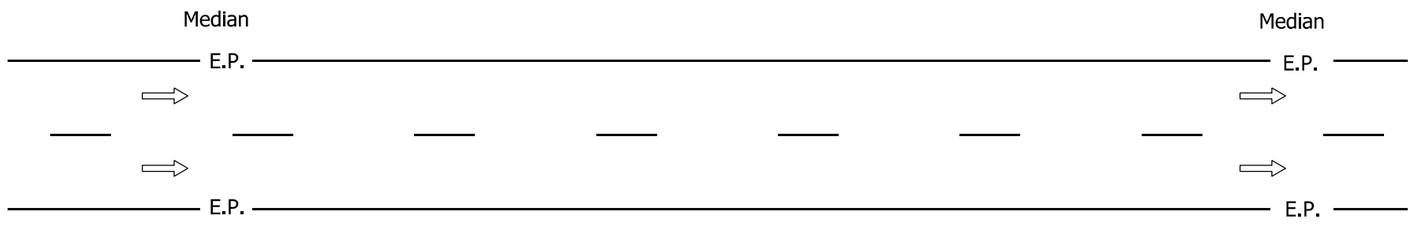

DIVIDED ROADWAY WITH SINGLE OVERHEAD STRUCTURE AND MEDIAN BRIDGE SUPPORT

NOTES:

1. This configuration shall be used where impact-attenuator units are specified in conjunction with a crashwall in the median of a divided roadway to shield the support of an overhead structure.

2. Dimensions and details not shown hereon shall be as shown on the plans.

INDIANA DEPARTMENT OF TRANSPORTATION

GUARDRAIL AT MEDIAN-SIDE
BRIDGE SUPPORT

SEPTEMBER 2011

STANDARD DRAWING NO. E 601-GRBS-05

RICHARD L. VanCLEAVE
REGISTERED
No. 9750
STATE OF INDIANA
PROFESSIONAL ENGINEER

DESIGN STANDARDS ENGINEER

/s/ Richard L. VanCleave 09/01/11
DESIGN STANDARDS ENGINEER DATE

/s/ Mark A. Miller 09/01/11
CHIEF HIGHWAY ENGINEER DATE

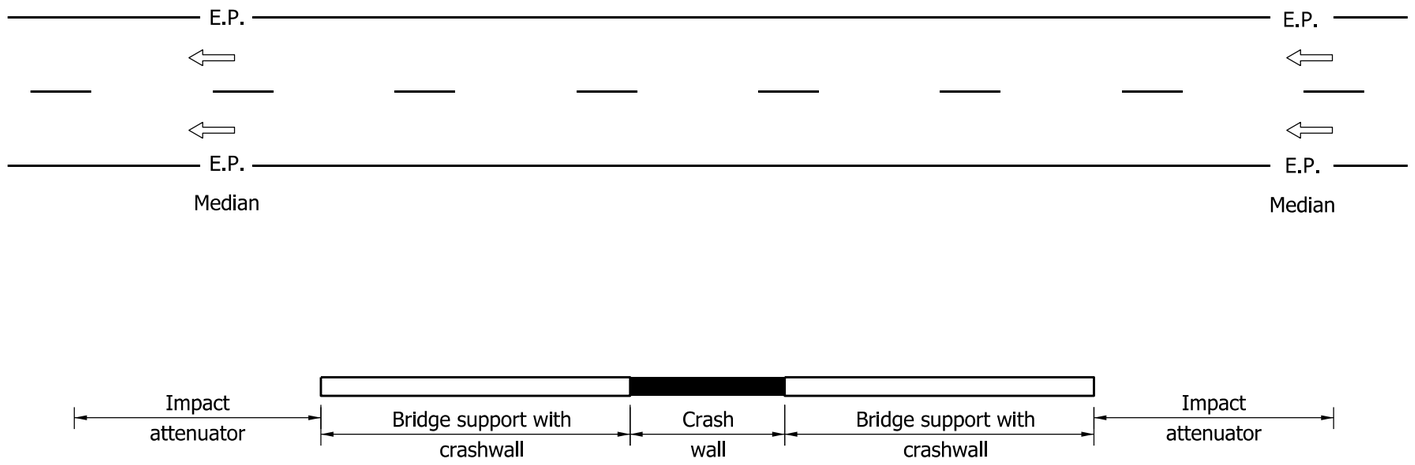

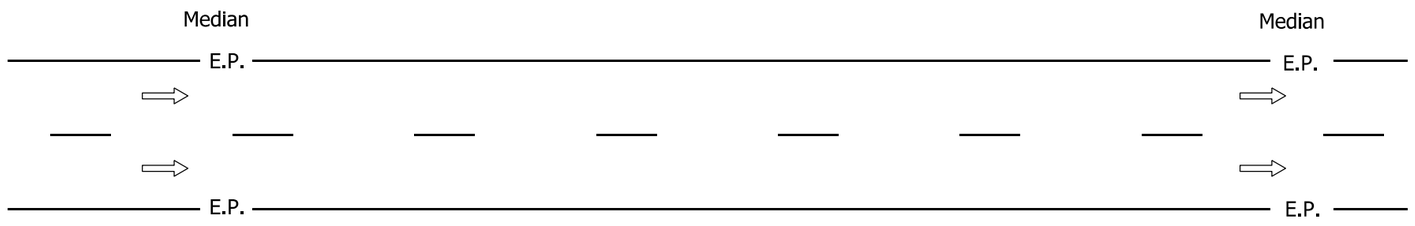

DIVIDED ROADWAY WITH TWIN OVERHEAD STRUCTURES AND MEDIAN BRIDGE SUPPORTS

NOTES:

1. This configuration shall be used where impact-attenuator units are specified in conjunction with a crashwall in the median of a divided roadway to shield the supports of twin overhead structures.

2. Dimensions and details not shown hereon shall be as shown on the plans.

INDIANA DEPARTMENT OF TRANSPORTATION

GUARDRAIL AT MEDIAN-SIDE BRIDGE SUPPORTS

SEPTEMBER 2011

STANDARD DRAWING NO. E 601-GRBS-06

RICHARD L. VanCLEAVE REGISTERED No. 9750 STATE OF INDIANA PROFESSIONAL ENGINEER

DESIGN STANDARDS ENGINEER

/s/ Richard L. VanCleave 09/01/11
DESIGN STANDARDS ENGINEER DATE

/s/ Mark A. Miller 09/01/11
CHIEF HIGHWAY ENGINEER DATE

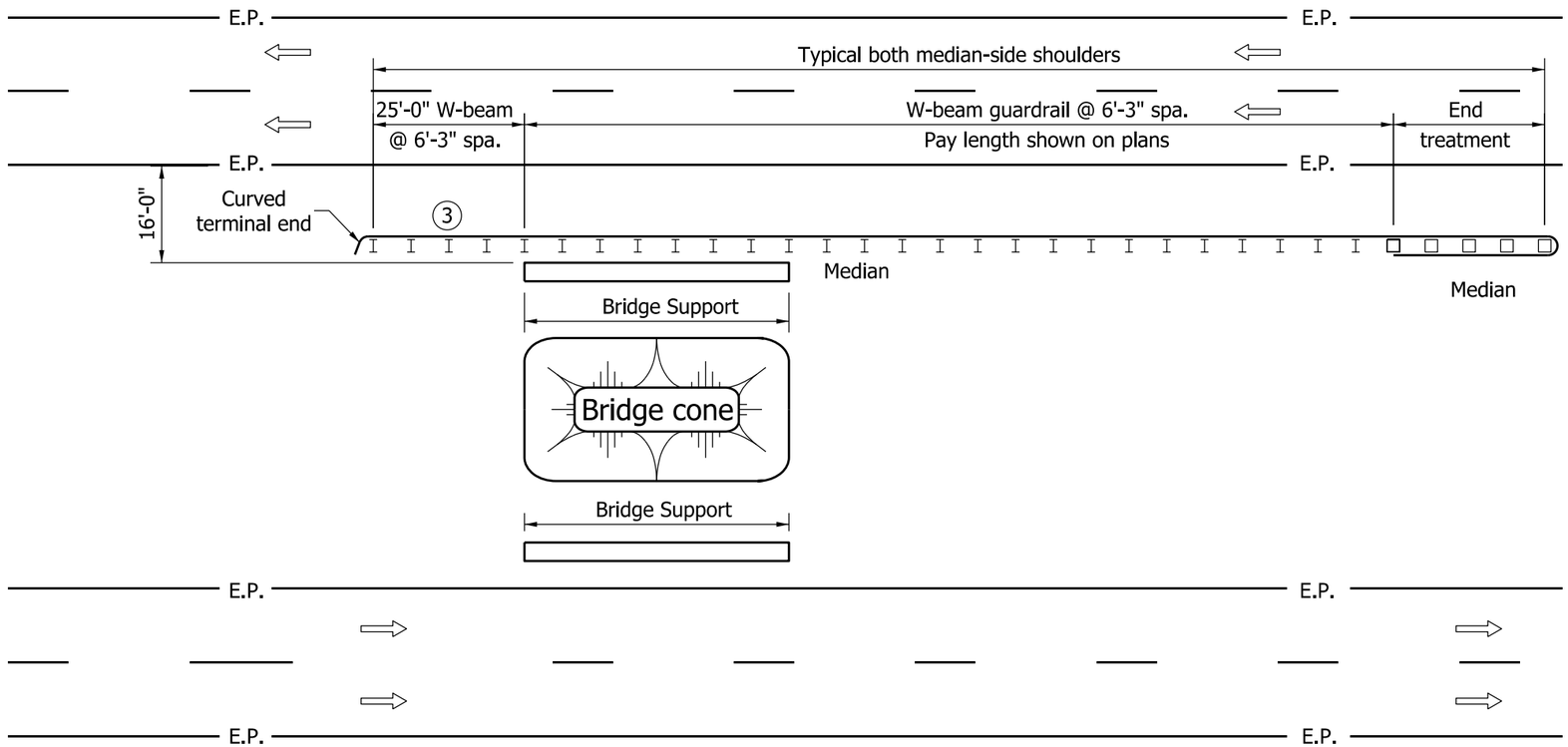

DIVIDED ROADWAY WITH TANDEM OVERHEAD STRUCTURES AND MEDIAN-SIDE BRIDGE-SUPPORT DISTANCE TO E.P. > 16'

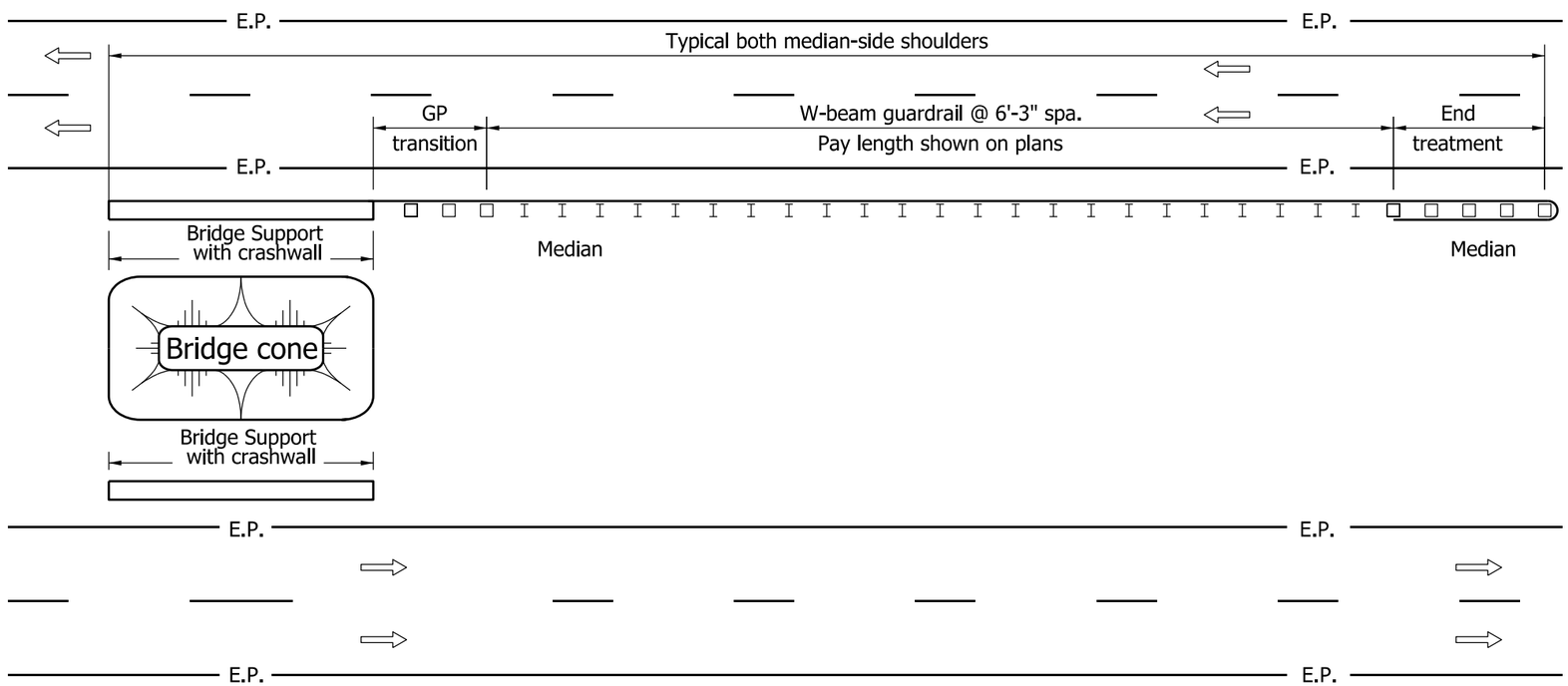

DIVIDED ROADWAY WITH TANDEM OVERHEAD STRUCTURES AND MEDIAN-SIDE BRIDGE-SUPPORT DISTANCE TO E.P. ≤ 16'

NOTES:

1. This configuration shall be used where W-beam guardrail is specified along the median-side shoulder of a divided roadway to shield the support of a tandem overhead structure.
2. Dimensions and details not shown hereon shall be as shown on the plans.

(3) Rectangular plate washers shall be installed at each post along this section. See Standard Drawing E 601-GRBS-08.

INDIANA DEPARTMENT OF TRANSPORTATION

GUARDRAIL AT MEDIAN-SIDE
BRIDGE SUPPORT

SEPTEMBER 2011

STANDARD DRAWING NO. E 601-GRBS-07

RICHARD L. VanCLEAVE
REGISTERED
No. 9750
STATE OF INDIANA
PROFESSIONAL ENGINEER

DESIGN STANDARDS ENGINEER

/s/ Richard L. VanCleave 09/01/11
DESIGN STANDARDS ENGINEER DATE

/s/ Mark A. Miller 09/01/11
CHIEF HIGHWAY ENGINEER DATE

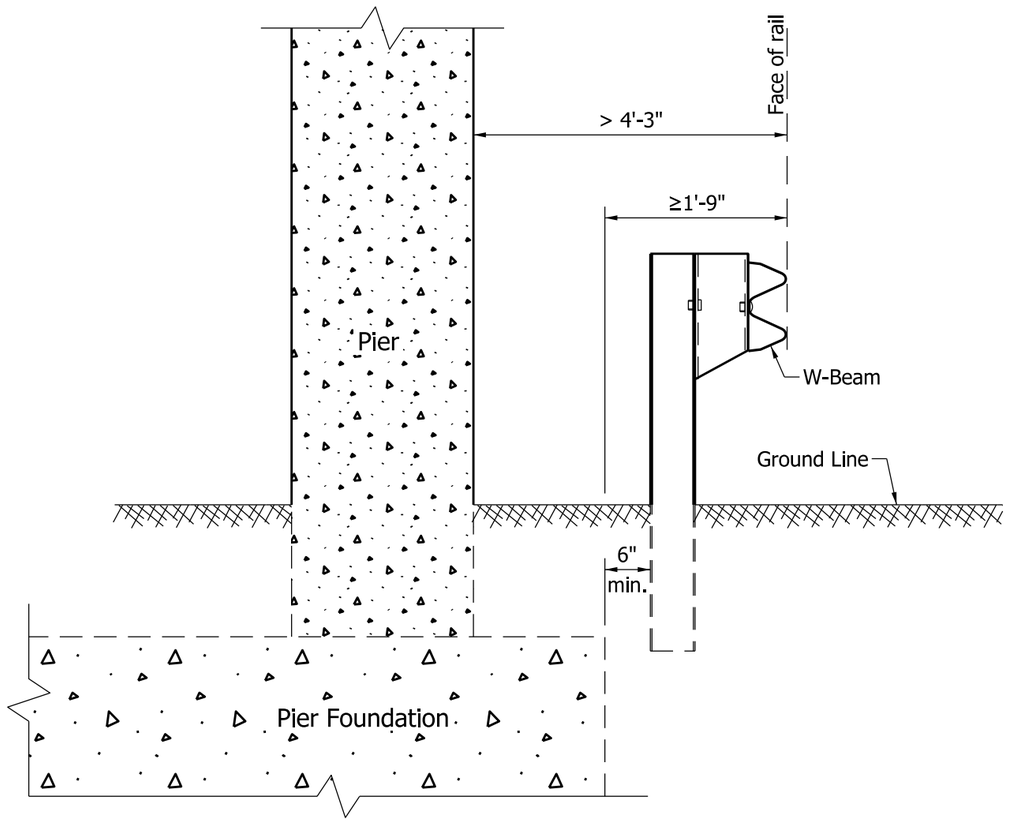

GUARDRAIL-TO-PIER CLEARANCE

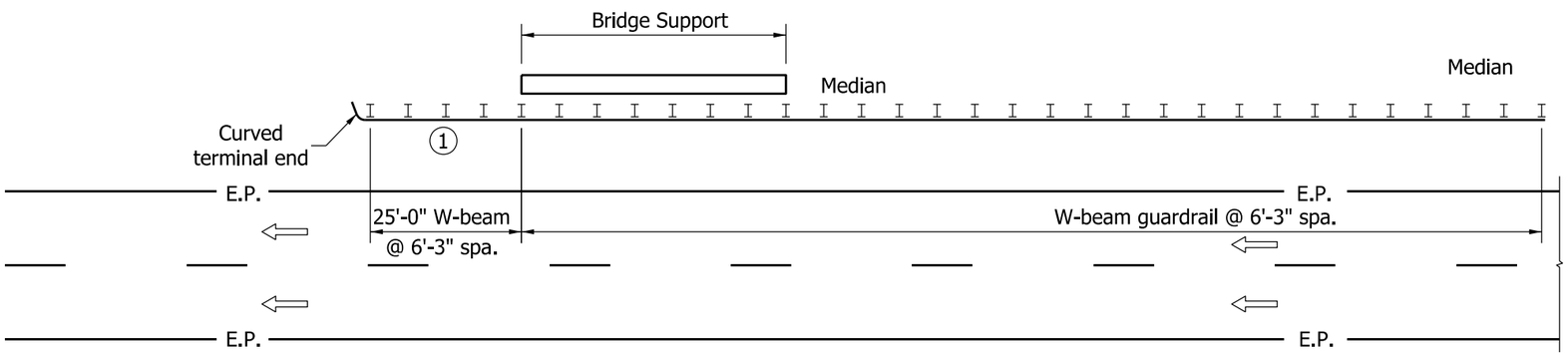

DOWNSTREAM GUARDRAIL TREATMENT

NOTE:

(1) Washers required for each post in this section shall be rectangular plate washers, as shown on Standard Drawing E 601-WBGC-02.

INDIANA DEPARTMENT OF TRANSPORTATION

GUARDRAIL AT BRIDGE SUPPORT

SEPTEMBER 2011

STANDARD DRAWING NO. E 601-GRBS-08

RICHARD L. VanCLEAVE REGISTERED No. 9750 STATE OF INDIANA PROFESSIONAL ENGINEER

DESIGN STANDARDS ENGINEER

/s/ Richard L. VanCleave 09/01/11

DESIGN STANDARDS ENGINEER DATE

/s/ Mark A. Miller 09/01/11

CHIEF HIGHWAY ENGINEER DATE

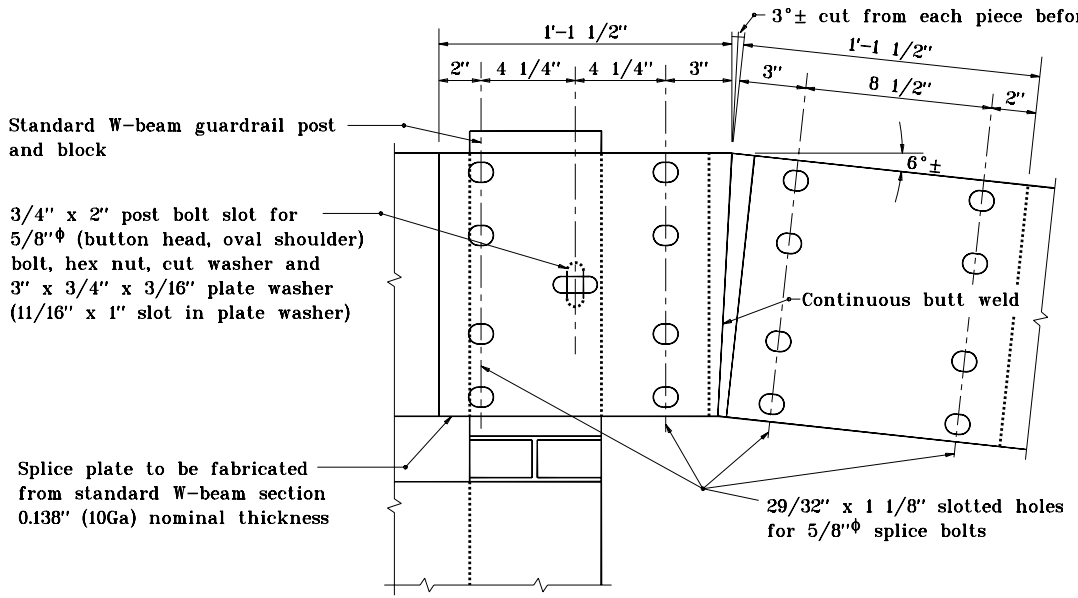

SPLICE PLATE ASSEMBLY DETAIL

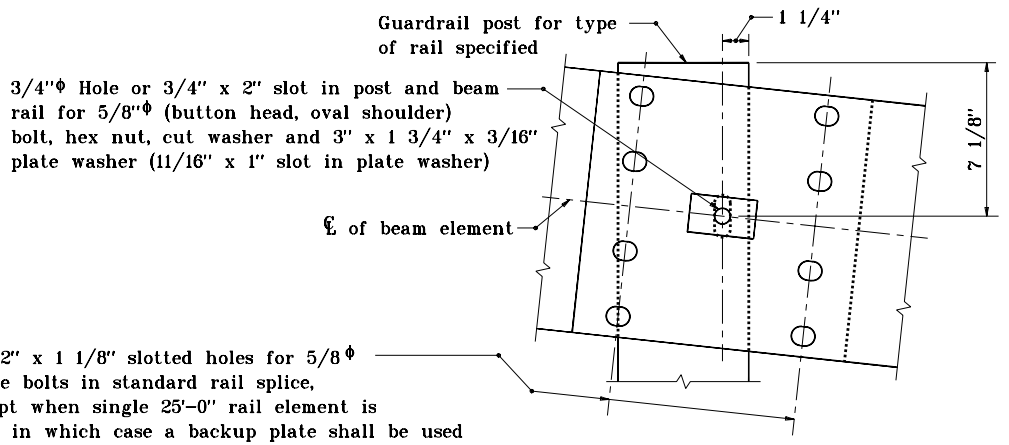

POST NO. 2 CONNECTION DETAIL

GENERAL NOTES

1. This sheet shall be used when guardrail end treatment type I is specified
2. The details on this sheet are for the assembly and the installation of the components of guardrail end treatment type I.

INDIANA DEPARTMENT OF TRANSPORTATION

GUARDRAIL END TREATMENT TYPE I

APRIL 1995

STANDARD DRAWING NO. **E 601-GRET-04**

ANTHONY L. UREMOVICH REGISTERED No. 18095 STATE OF INDIANA PROFESSIONAL ENGINEER

DESIGN STANDARDS ENGINEER

DETAILS PLACED IN THIS FORMAT 11-15-99

/s/ Anthony L. Uremovich 11-15-99
DESIGN STANDARDS ENGINEER DATE

/s/ Firooz Zandi 11-15-99
CHIEF HIGHWAY ENGINEER DATE

ORIGINALLY APPROVED 4-03-95

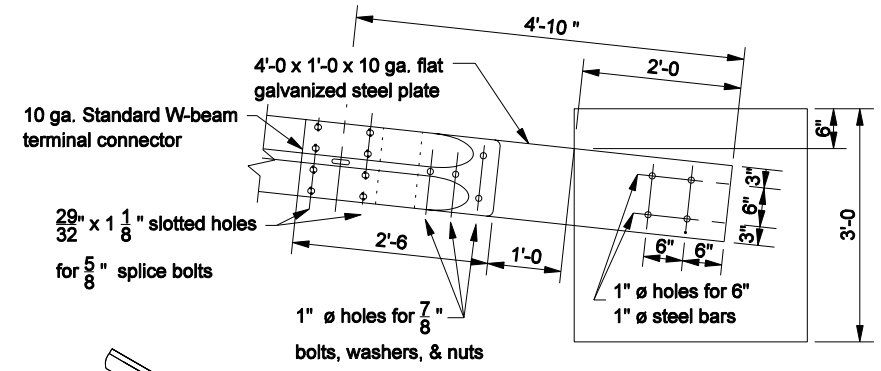

CONCRETE ANCHOR DETAIL

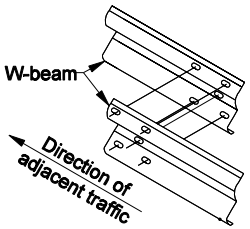

LAP DETAIL

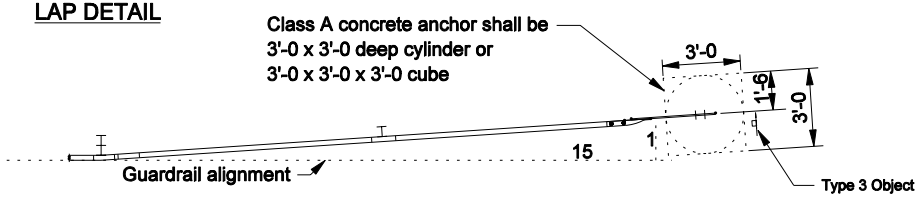

PLAN

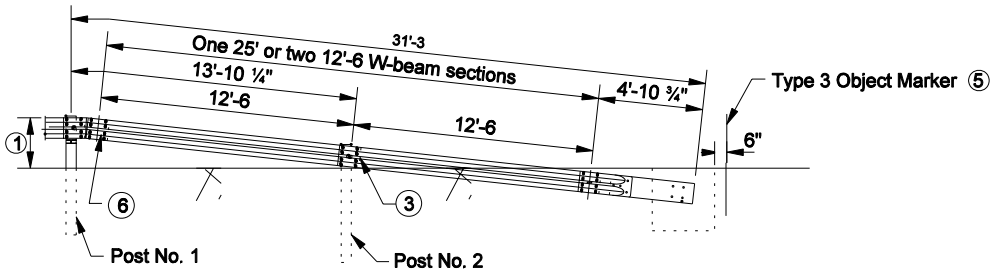

Post No. 1 & No. 2 length = 6'-0

ELEVATION

GENERAL NOTES

① The top of rail height at this post shall match the height of the adjacent guardrail.

2. Installation of guardrail end treatment type I at the end of a run of rub-rail type guardrail shall require the relocation of the rub-rail as shown.

③ See Standard Drawing E 601-GRET-04 for Post No.2 Connection Detail.

④ If rub-rail is not spliced at post, the channel shall be cut and repositioned behind the post flange.

⑤ See Standard Drawing E 808-MKNB-03 for Object Marker Type 3 Details.

⑥ See Standard Drawing E 601-GRET-04 for Splice Plate Assembly Detail.

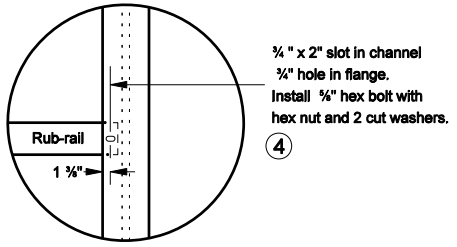

RUB-RAIL RELOCATION DETAIL

INDIANA DEPARTMENT OF TRANSPORTATION

GUARDRAIL END TREATMENT TYPE I

SEPTEMBER 2006

STANDARD DRAWING NO. E 601-GRET-05

RICHARD L. VanCLEAVE REGISTERED No. 9750 STATE OF INDIANA PROFESSIONAL ENGINEER

DESIGN STANDARDS ENGINEER

/s/ Richard L. VanCleave 9-01-06
DESIGN STANDARDS ENGINEER DATE

/s/ Richard K. Smutzer 9-01-06
CHIEF HIGHWAY ENGINEER DATE

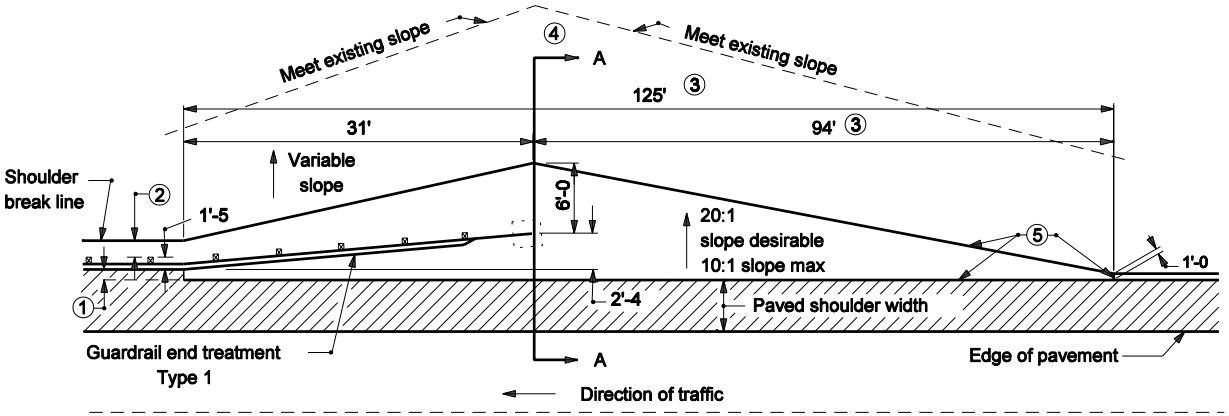

PLAN VIEW

GRADING DETAIL FOR GUARDRAIL END TREATMENT TYPE I

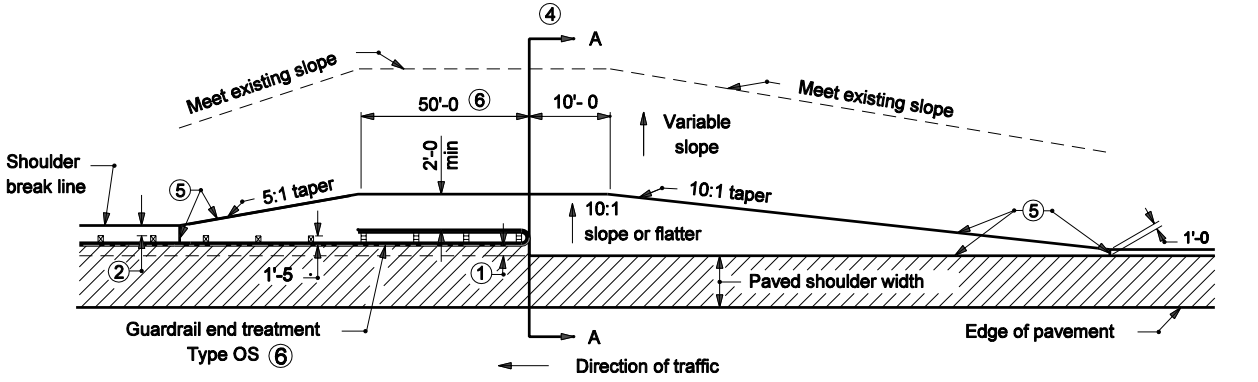

PLAN VIEW

GRADING DETAIL FOR GUARDRAIL END TREATMENT TYPE OS

NOTES:

① The required guardrail offset shall be 0 to 2'-0" desirable as specified in The plans. The offset used between the the edge of required shoulder and the face of rail shall also be used to establish the berm width at the end of the guardrail end treatment.

② This distance may vary from 0 to 2'-0" desirable.

③ These dimensions are based on a 2'-0" guardrail offset and must be adjusted for other offset distances to maintain a 10:1 taper.

④ Grading profiles at Section A-A for types OS and type I guardrail end treatments are shown on Standard Drawings E 601-GRET-08, and -09.

⑤ Limits of compacted aggregate.

⑥ Length and width of OS Unit Test Level 3 (TL-3)
Length = 50'-0"
Width = 2'-0"

INDIANA DEPARTMENT OF TRANSPORTATION

GRADING AT GUARDRAIL END TREATMENTS

March 2004

STANDARD DRAWING NO. E 601-GRET-06

ANTHONY L. UREMOVICH REGISTERED No. 18095 STATE OF INDIANA PROFESSIONAL ENGINEER

DESIGN STANDARDS ENGINEER

/s/ Anthony L.Uremovich 3-01-04
DESIGN STANDARDS ENGINEER DATE

/s/ Richard K.Smutzer 3-01-04
CHIEF HIGHWAY ENGINEER DATE

NOTES:

① This distance may vary from 0 to 2'-0" desirable.

② If necessary, move existing ditch line to obtain a 4:1 slope.

③ Length and width of MS Unit Test Level 3 (TL-3) and transition rail where required:
Length = 31'-3" (MS unit) + 12' - 6" (transition rail) = 43' - 9" (typ)
Width = 2'-4"

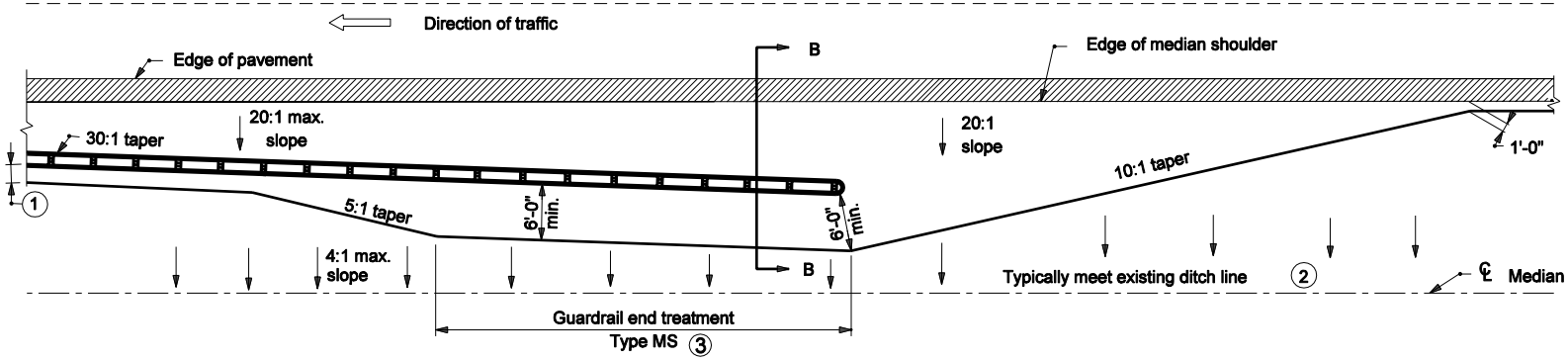

PLAN VIEW - GRADING DETAIL FOR G.R.E.T. TYPE MS ON FLARE

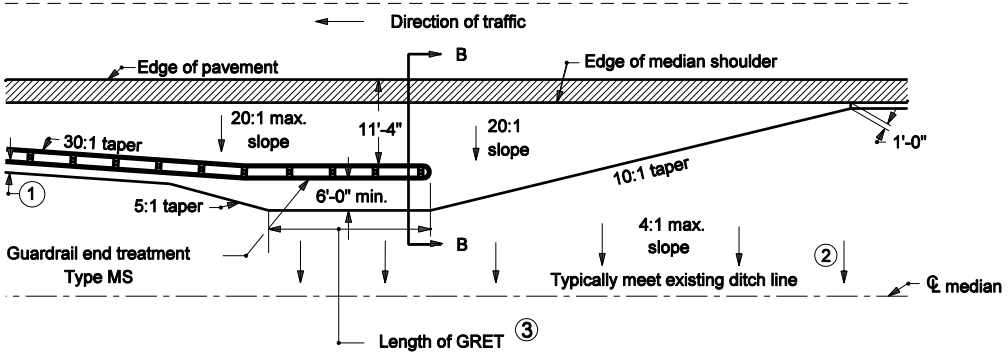

PLAN VIEW

GRADING DETAIL FOR GUARDRAIL END TREATMENT TYPE MS PARALLEL TO SHOULDER

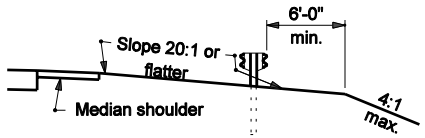

SECTION B-B

INDIANA DEPARTMENT OF TRANSPORTATION

GRADING AT GUARDRAIL END TREATMENT

MARCH 2005

STANDARD DRAWING NO. E 601-GRET-07

RICHARD L. VanCLEAVE REGISTERED No. 9750 STATE OF INDIANA PROFESSIONAL ENGINEER

DESIGN STANDARDS ENGINEER

/s/ Richard L. VanCleave 3-01-05
DESIGN STANDARDS ENGINEER DATE

/s/ Richard K. Smutzer 3-01-05
CHIEF HIGHWAY ENGINEER DATE

NOTES:

1. Grading cross section Option 1 is most desirable and shall be used on new construction. Option 7 is least desirable. The grading cross section to be used shall be as detailed or specified on the plans. A more desirable option may be used in lieu of the option specified.

② The backslope on Option 3 shall not exceed 2:1 on 3R projects.

③ Benching required for existing slopes steeper than 4:1.

④ See plan views on Standard Drawing E 601-GRET-06.

⑤ Plow or deeply scarify for existing slopes 4:1 or flatter.

6. Section A-A Options 1, 2, and 3 may be used with guardrail end treatment type I or OS.

Recoverable Proposed Slopes (Options 1, 2, and 3)

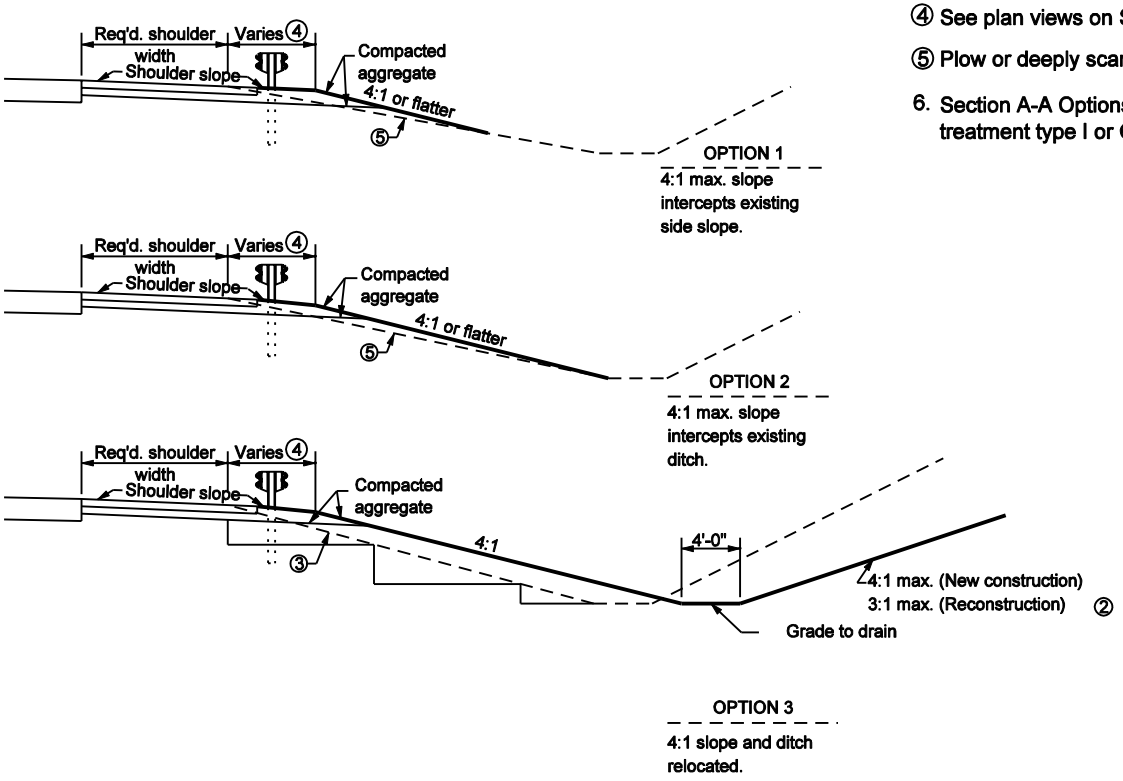

GRADING CROSS SECTIONS AT SECTION A-A

INDIANA DEPARTMENT OF TRANSPORTATION

GRADING AT GUARDRAIL END TREATMENT

SEPTMBER 2002

STANDARD DRAWING NO. E 601-GRET-08

RICHARD L. VanCLEAVE REGISTERED No. 9750 STATE OF INDIANA PROFESSIONAL ENGINEER

DESIGN STANDARDS ENGINEER

/s/ Richard L VanCleave 9-03-02
DESIGN STANDARDS ENGINEER DATE

/s/ Richard K. Smutzer 9-03-02
CHIEF HIGHWAY ENGINEER DATE

Non-Recoverable Proposed Slopes (Options 4, 5, 6 and 7)

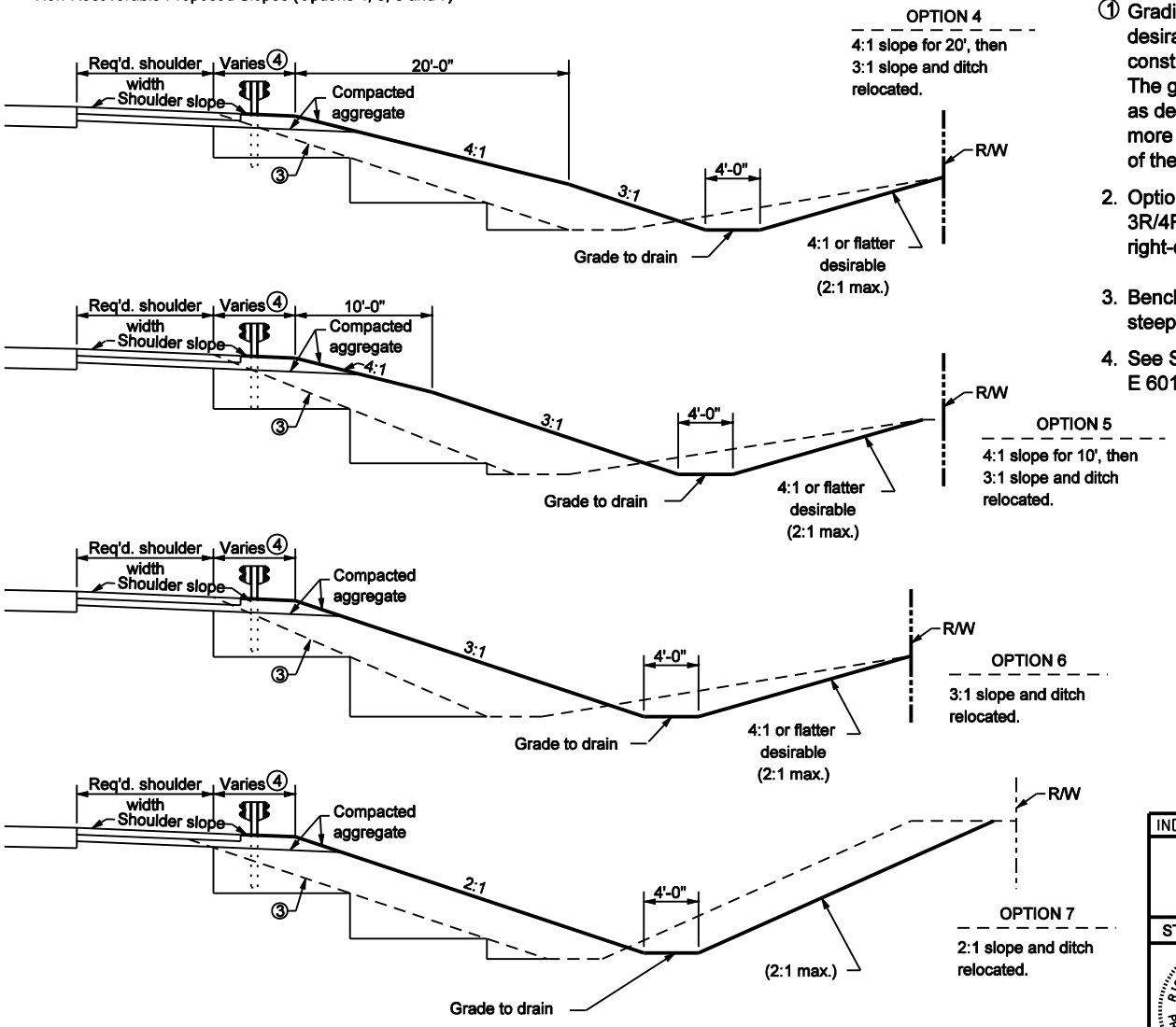

GRADING CROSS SECTIONS AT SECTION A-A

NOTES:

① Grading cross section Option 1 is most desirable and shall be used on new construction. Option 7 is least desirable. The grading cross section to used shall be as detailed or specified on the plans. A more desirable option may be used in lieu of the option specified.

2. Options 4 through 7 may only be used on a 3R/4R partial reconstruction project with right-of-way restrictions.

3. Benching required for existing slopes steeper than 4:1.

4. See Standard Drawing E 601-GRET-06 for plan views.

INDIANA DEPARTMENT OF TRANSPORTATION

GRADING AT GUARDRAIL END TREATMENTS

SEPTEMBER 2002

STANDARD DRAWING NO. E 601-GRET-09

RICHARD L. VanCLEAVE REGISTERED No. 9750 STATE OF INDIANA PROFESSIONAL ENGINEER

DESIGN STANDARDS ENGINEER

/s/ Richard L VanCleave 9-03-02
DESIGN STANDARDS ENGINEER DATE

/s/ Richard K. Smutzer 9-03-02
CHIEF HIGHWAY ENGINEER DATE

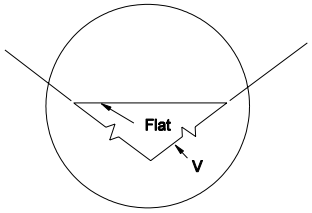

DITCH DETAIL

PLAN

Design speed mph	a:b
≥ 60	13:1
55	12:1
50	11:1
45 or less	10:1

a:b RATIO

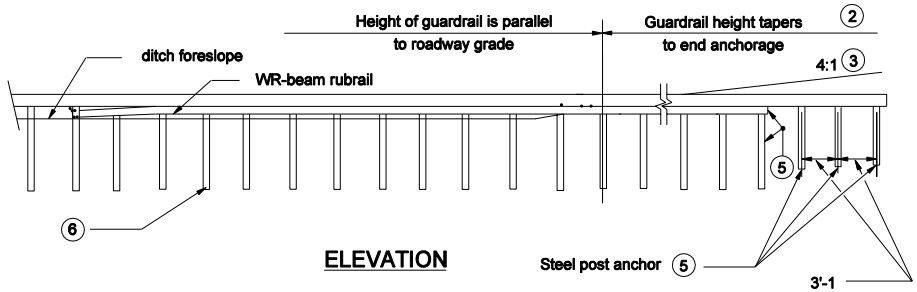

ELEVATION

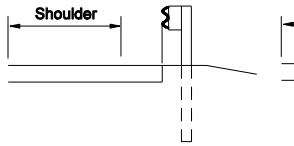

SECTION A-A

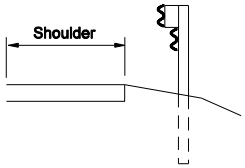

SECTION B-B
(WITH RUBRAIL)

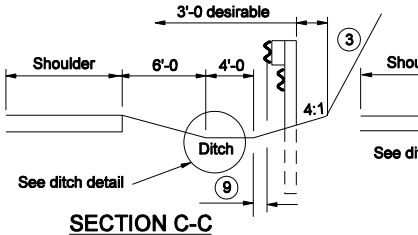

SECTION C-C
(WITH RUBRAIL)

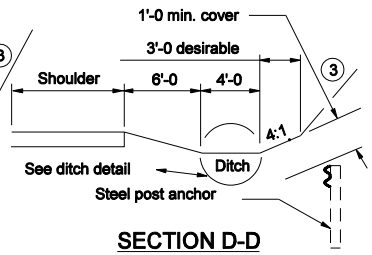

SECTION D-D

NOTES:

1. All posts are 8 ft in length from where the guardrail flares away from the shoulder back to the post anchor. Posts for the post anchor are 6 ft long.
2. (2) Guardrail height may be tapered down in elevation to maintain 3'-9 maximum.
3. (3) A 4:1 or flatter slope is desirable. However, a steeper or flatter existing slope may be used.
4. (4) Variable ditch offsets may be used to fit field conditions.
5. (5) See Standard Drawing E 601-GRET-11 for rub rail anchor details and post anchor details.
6. (6) See Standard Drawing E 601-WBGA-06 for steel post and wood block details.
7. Ditch cross section profile should be same as upstream ditch cross section profile and have same or greater hydraulic capacity.
8. (8) See Standard Drawing E 601-WBGA-06 for detail.
9. (9) Posts shall be installed offset from the required ditch cross section to maintain ditch's hydraulic capacity.

INDIANA DEPARTMENT OF TRANSPORTATION

GUARDRAIL END TREATMENT TYPE II

SEPTEMBER 2004

STANDARD DRAWING NO. E 601-GRET-10

REGISTERED RICHARD L. VanCLEAVE No. 9750 STATE OF INDIANA PROFESSIONAL ENGINEER

DESIGN STANDARDS ENGINEER

/s/ Richard L. VanCleave 9-01-04
DESIGN STANDARDS ENGINEER DATE

/s/ Richard K. Smutzer 9-01-04
CHIEF HIGHWAY ENGINEER DATE

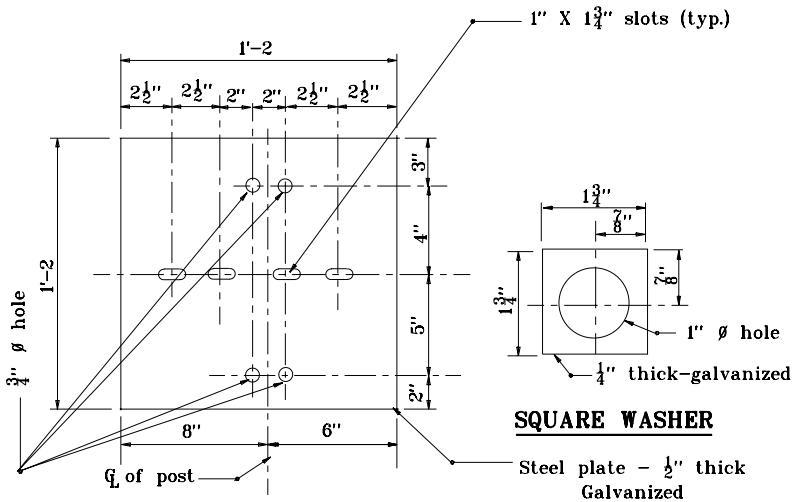

SQUARE WASHER

STEEL PLATE DETAIL

STEEL PLATE AND WASHER DETAILS

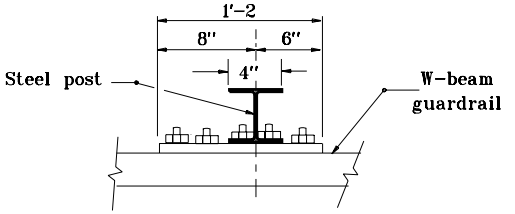

PLAN

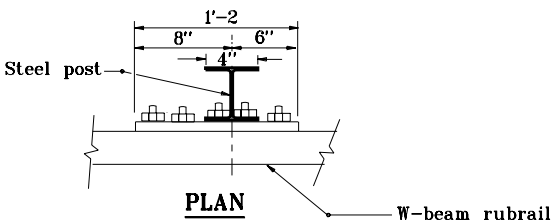

PLAN

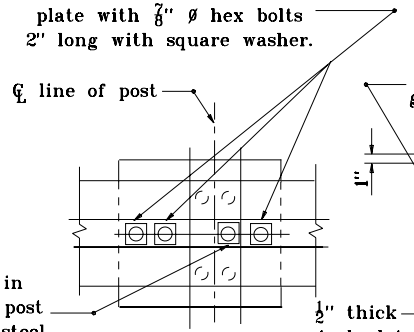

FRONT VIEW

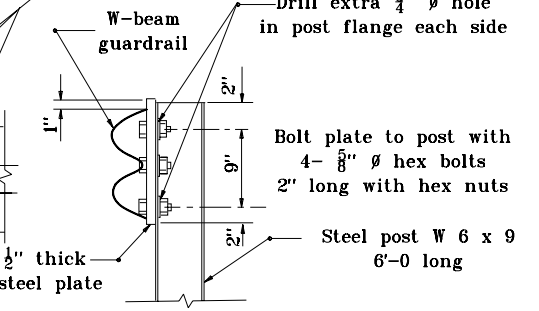

ELEVATION

POST ANCHOR DETAILS

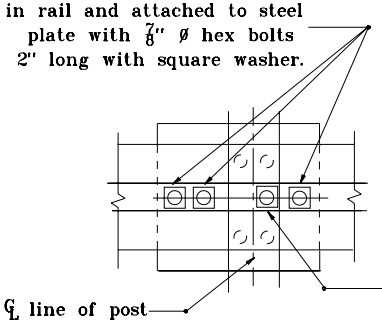

FRONT VIEW

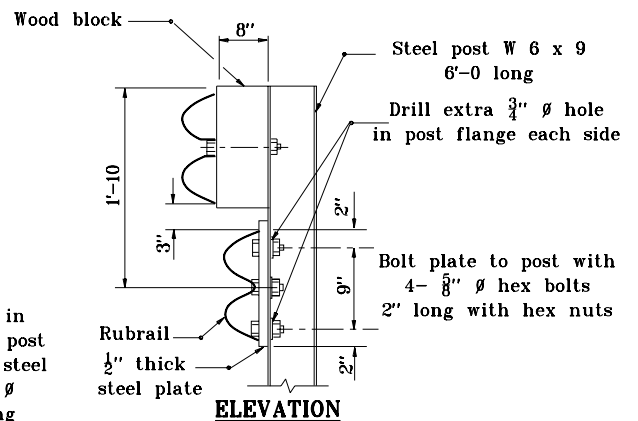

ELEVATION

RUBRAIL ANCHOR DETAILS

INDIANA DEPARTMENT OF TRANSPORTATION

GUARDRAIL END TREATMENT TPPE II–COMPONENTS

SEPTEMBER 2000

STANDARD DRAWING NO. **E 601–GRET–11**

ANTHONY L. UREMOVICH REGISTERED No. 18095 STATE OF INDIANA PROFESSIONAL ENGINEER

DESIGN STANDARDS ENGINEER

/s/ Anthony L. Uremovich 9–01–00
DESIGN STANDARDS ENGINEER — DATE

/s/ Firooz Zandi 9–01–00
CHIEF HIGHWAY ENGINEER — DATE

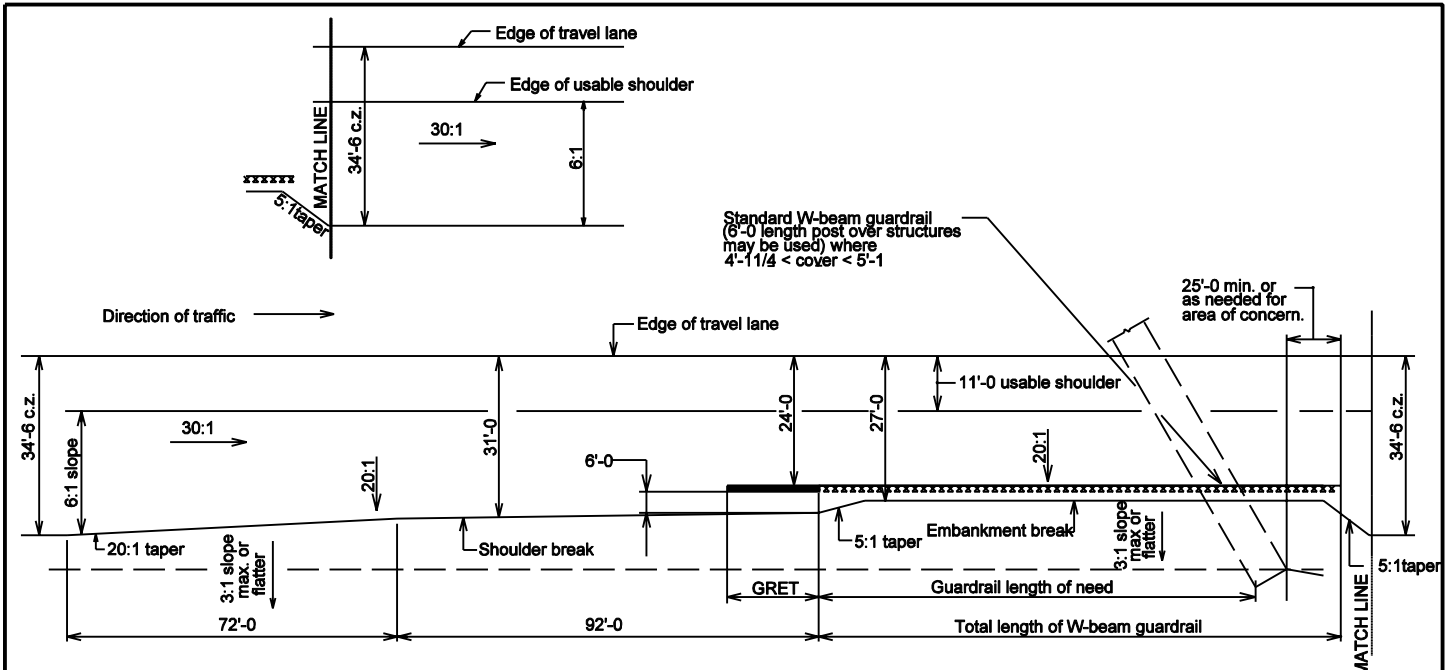

PLAN

NOTES:

1. Grading requirements shown are for 5'-6 or larger structures, and three-sided structures on project constructed on new alignment for design speed of 70 mph rural divided highway.
2. Grading shown above is applicable for 25'-0 span nested guardrail also.
3. Grading requirements for 5'-6 or larger structures and three sided structures constructed on existing alignments at all design speeds are shown in standard Drawings E 601-GRET 06 through 09.

INDIANA DEPARTMENT OF TRANSPORTATION

GRADING REQUIREMENTS FOR LARGE DRAINAGE STRUCTURE

SEPTEMBER 2001

STANDARD DRAWING NO. E 601-GRET-12

RICHARD L. VANCLEAVE REGISTERED NO. 9750 STATE OF INDIANA PROFESSIONAL ENGINEER

DESIGN STANDARDS ENGINEER

/s/ Richard L.VanCleave 9-04-01
DESIGN STANDARDS ENGINEER DATE

/s/ Firooz Zandi 9-04-01
CHIEF HIGHWAY ENGINEER DATE

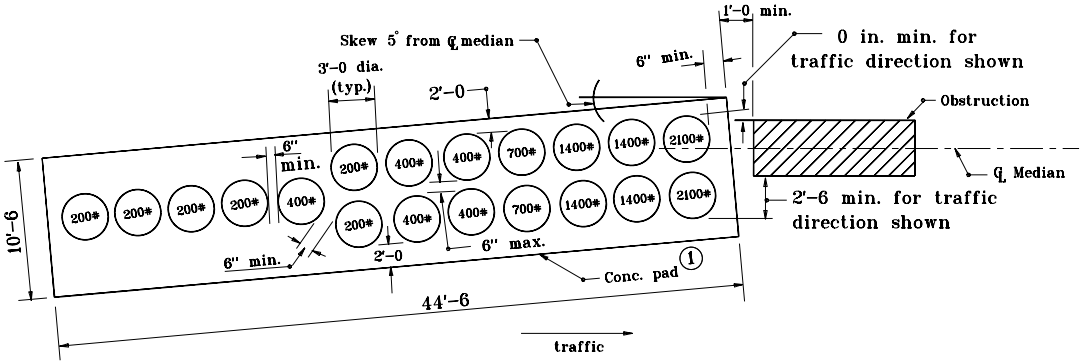

CONCRETE PAD PLAN IMPACT ATTENUATOR TYPE ED GRAVEL BARREL ARRAY FOR TEST LEVEL 3

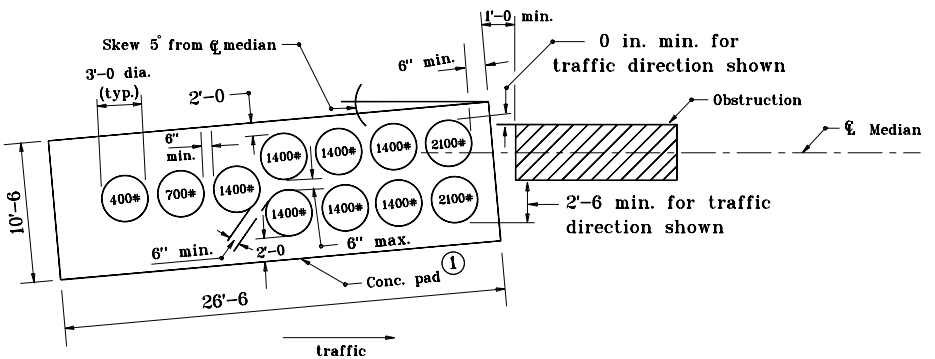

CONCRETE PAD PLAN IMPACT ATTENUATOR TYPE ED GRAVEL BARREL ARRAY FOR TEST LEVEL 2

NOTES:

1. Concrete pad shall be 6" thick with welded wire fabric 6" x 6", W3/W3 or equivalent. A clearance of 2" shall be provided between all sides and top of concrete pad and welded wire fabric.
2. Appropriate impact attenuator Test Level shall be used to determine the concrete pad size and gravel barrel layout.
3. See Standard Drawings E 601-GAIA-01, 01A and 02 for grading details.
4. The details shown are for an impact attenuator type ED, gravel barrel array with a maximum obstruction width of 3'-0.

INDIANA DEPARTMENT OF TRANSPORTATION

IMPACT ATTENUATOR ED LAYOUT

MARCH 2002

STANDARD DRAWING NO. **E 601-IAED-01**

RICHARD L. VanCLEAVE REGISTERED No. 9750 STATE OF INDIANA PROFESSIONAL ENGINEER

DESIGN STANDARDS ENGINEER

/s/ Richard L. VanCleave 3-01-02
DESIGN STANDARDS ENGINEER — DATE

/s/ Richard K. Smutzer 3-01-02
CHIEF HIGHWAY ENGINEER — DATE

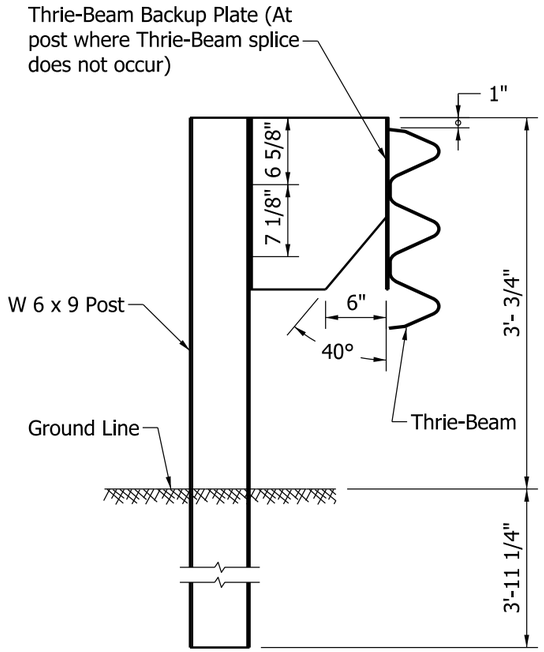

THRIE BEAM GUARDRAIL

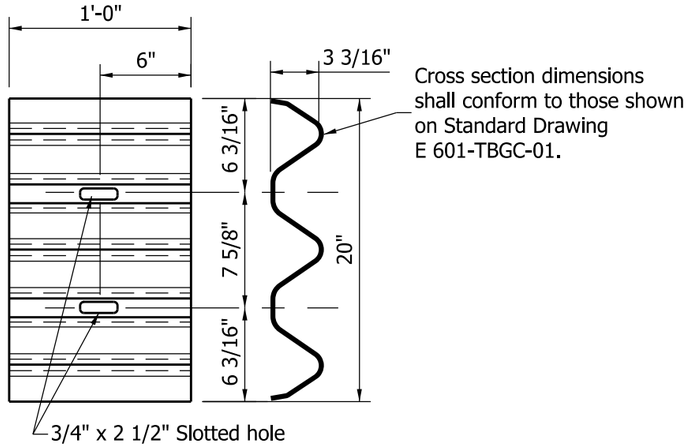

THRIE BEAM GUARDRAIL BACK-UP PLATE AT LOCATIONS WITHOUT SPLICE

NOTES:

1. See Standard Drawing E 601-TBGC-01 for Thrie Beam rail section details.
2. See Standard Drawings E 601-TTGB-03 and E 601-TTGB-04 for W 6 x 9 post hole pattern details.
3. Typical post spacing for Thrie Beam Guardrail and Double Faced Thrie Beam Guardrail is 6'-3".
4. Only the blockout material shown may be used.

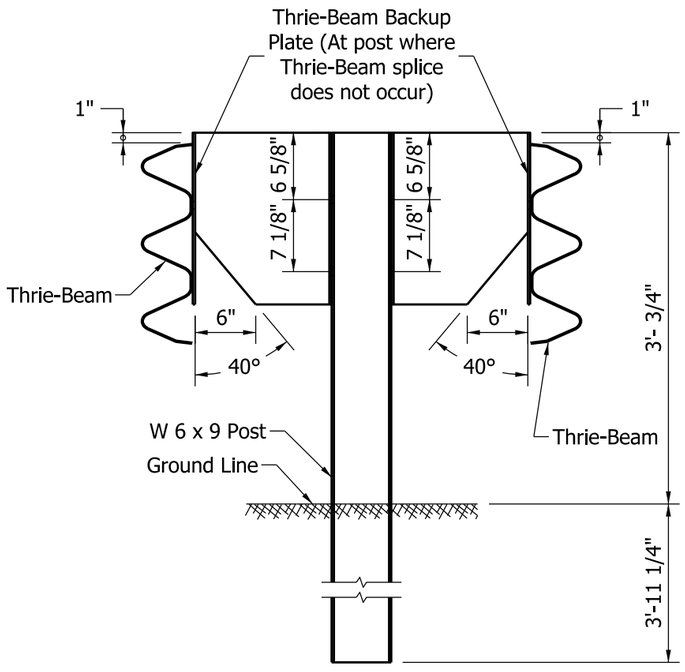

DOUBLE FACED THRIE BEAM GUARDRAIL

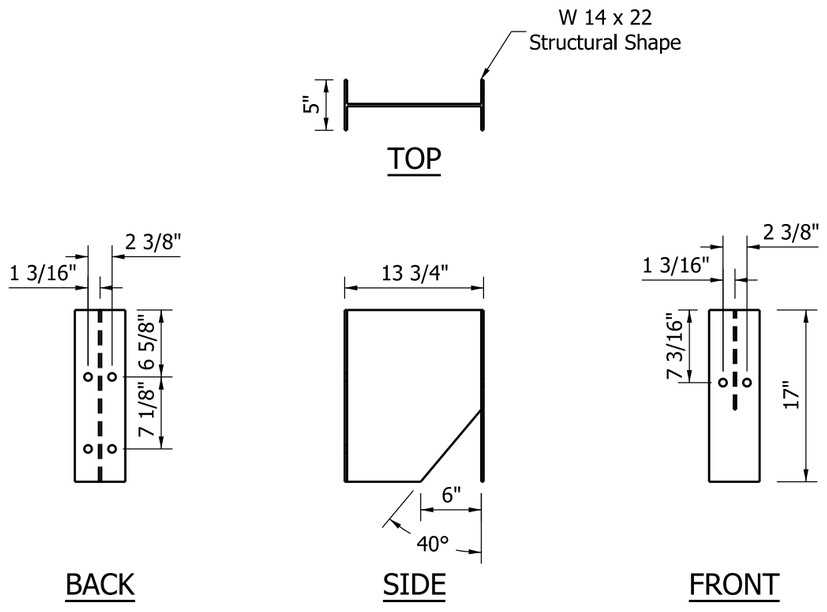

THRIE BEAM GUARDRAIL BLOCKOUT
(STEEL ONLY)

INDIANA DEPARTMENT OF TRANSPORTATION

THRIE BEAM
GUARDRAIL DETAILS

SEPTEMBER 2011

STANDARD DRAWING NO. E 601-MTGR-01

RICHARD L. VanCLEAVE REGISTERED No. 9750 STATE OF INDIANA PROFESSIONAL ENGINEER

DESIGN STANDARDS ENGINEER

/s/ Richard L. VanCleave 09/01/11
DESIGN STANDARDS ENGINEER DATE

/s/ Mark A. Miller 09/01/11
CHIEF HIGHWAY ENGINEER DATE

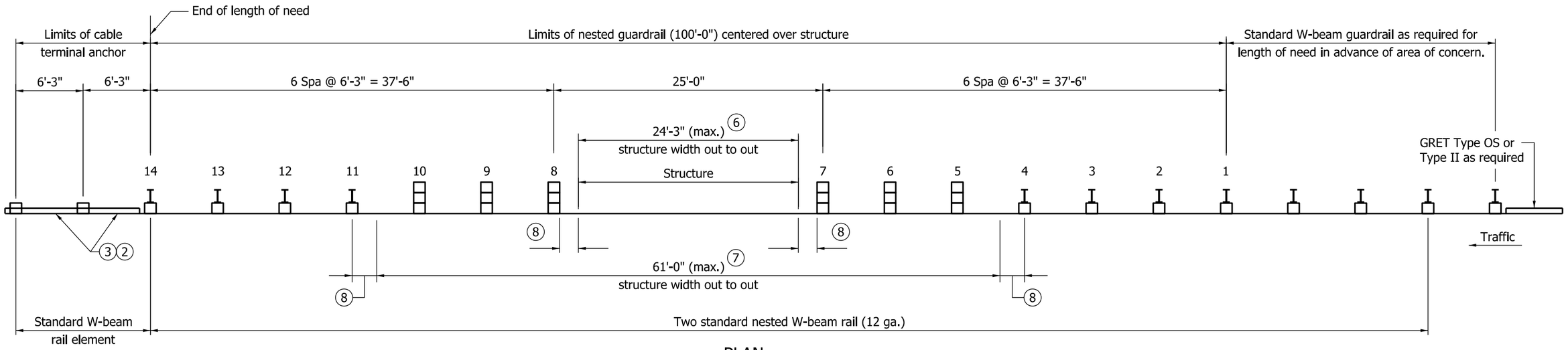

PLAN

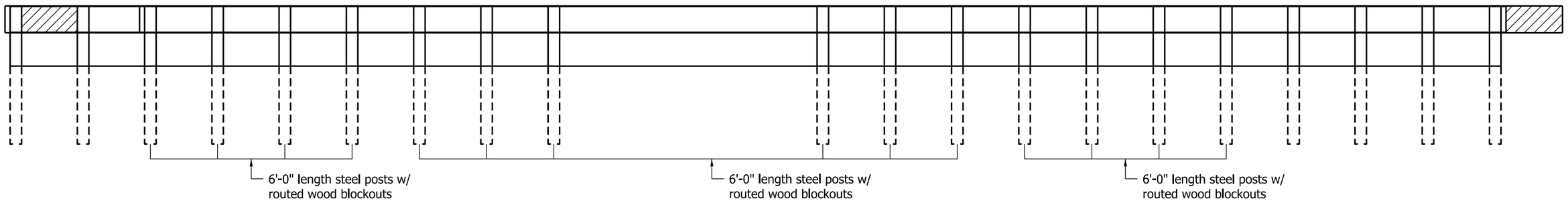

ELEVATION

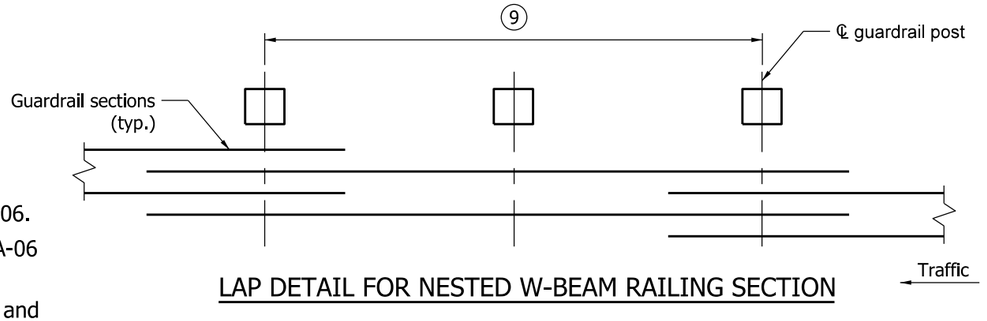

LAP DETAIL FOR NESTED W-BEAM RAILING SECTION

NOTES:

(2) For two-lane two-way operation, use GRET type OS. For structure width > 24'-3", provide three additional spans of standard W-beam guardrail at 6'-3" each before attaching the GRET.

(3) For multi-lane divided operation, use cable terminal, anchor, See Standard Drawing E 601-GCTA-01 through E 601-GCTA-06.

4. See Standard Drawings E 601-GRET-10, 11 and E 601-WBGA-06 for GRET Type II details.

5. See Standard Drawings E 601-NWGA-02, 03 and 04 for post and block assemblies details.

(6) Maximum structure width shall be 24'-3" out to out of structure(s) parallel to road centerline for skewed or perpendicular structure. In this case posts are not located over portion of structure.

(7) Maximum structure width shall be 61'-0" out to out of structure(s) parallel to roadway centerline for skewed or perpendicular structure. Modified posts (5 through 10) over the structure where required, see Standard Drawing E 601-NWGA-03. The remaining wood posts shall be shown on Standard Drawing E 601-NWGA-02.

NOTES:

(8) Post shall clear outer structure side by 4" min.

(9) This dimension is 25'-0" between posts 7 and 8. The dimension is 12'-6" or 25'-0" elsewhere.

10. For grading requirements see Standard Drawings E 601-GRET-06 through 09 and E 601-GRET-12.

INDIANA DEPARTMENT OF TRANSPORTATION

25'-0" SPAN NESTED GUARDRAIL FOR LARGE DRAINAGE STRUCTURE

SEPTEMBER 2010

STANDARD DRAWING NO. E 601-NWGA-01

RICHARD L. VanCLEAVE REGISTERED No. 9750 STATE OF INDIANA PROFESSIONAL ENGINEER

DESIGN STANDARDS ENGINEER

/s/ Richard L. VanCleave 09/01/10
DESIGN STANDARDS ENGINEER DATE

/s/ Mark A. Miller 09/01/10
CHIEF HIGHWAY ENGINEER DATE

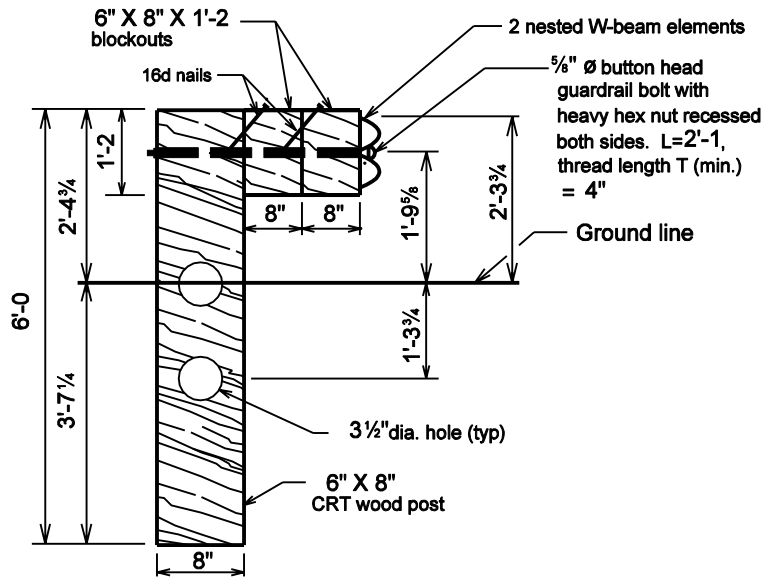

NESTED GUARDRAIL ASSEMBLY.

(Posts 5 to 10)

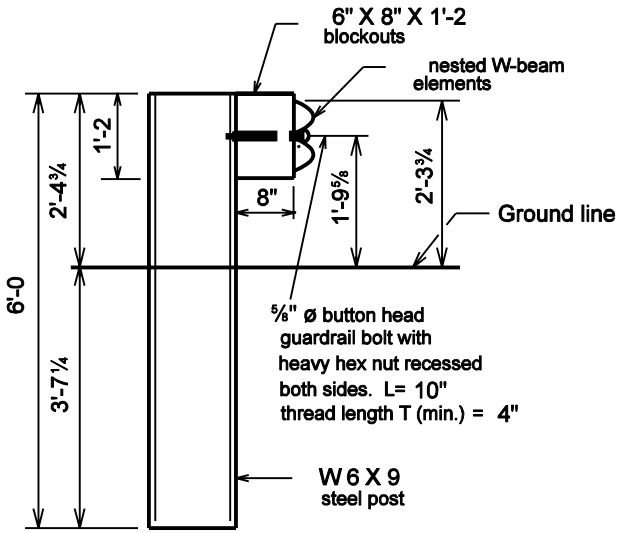

STEEL POST AND BLOCK FOR USE WITH NESTED GUARDRAIL ASSEMBLY

(Posts 1 to 4 and 11 to 14)

INDIANA DEPARTMENT OF TRANSPORTATION

NESTED GUARDRAIL ASSY.
FOR STRUCTURE WIDTH ≤ 24'-3

SEPTEMBER 2001

STANDARD DRAWING NO. E 601-NWGA-02

RICHARD L. VANCLEAVE REGISTERED No. 9750 STATE OF INDIANA PROFESSIONAL ENGINEER
DESIGN STANDARDS ENGINEER

/s/ Richard L VanCleave 9-04-01
DESIGN STANDARDS ENGINEER DATE

/s/ Firooz Zandi 9-04-01
CHIEF HIGHWAY ENGINEER DATE

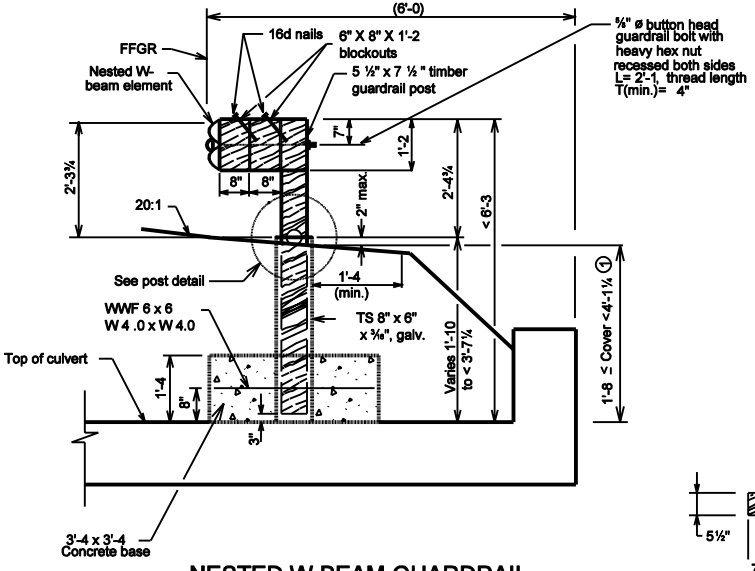

NESTED W-BEAM GUARDRAIL ASSY. WITH MODIFIED POSTS OVER STRUCTURE WIDTH (POSTS 5 TO 10)

NOTES:

① Use modified guardrail posts.

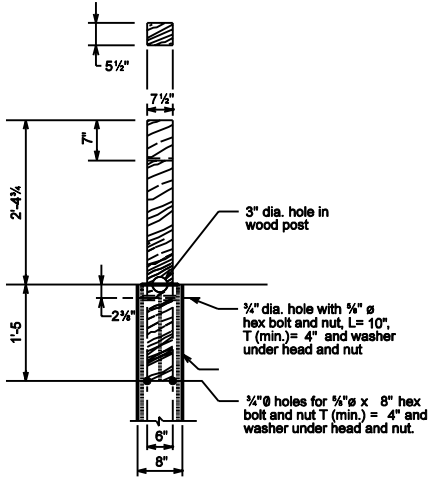

POST DETAIL

INDIANA DEPARTMENT OF TRANSPORTATION

GUARDRAIL ASSEMBLY FOR STRUCTURE WIDTH > 24'-3

SEPTEMBER 2001

STANDARD DRAWING NO. E 601-NWGA-03

RICHARD L. VANCLEAVE REGISTERED No. 9750 STATE OF Indiana PROFESSIONAL ENGINEER

DESIGN STANDARDS ENGINEER

/s/ Richard L.VanCleave 9-04-01
DESIGN STANDARDS ENGINEER DATE

/s/ Firooz Zandi 9-04-01
CHIEF HIGHWAY ENGINEER DATE

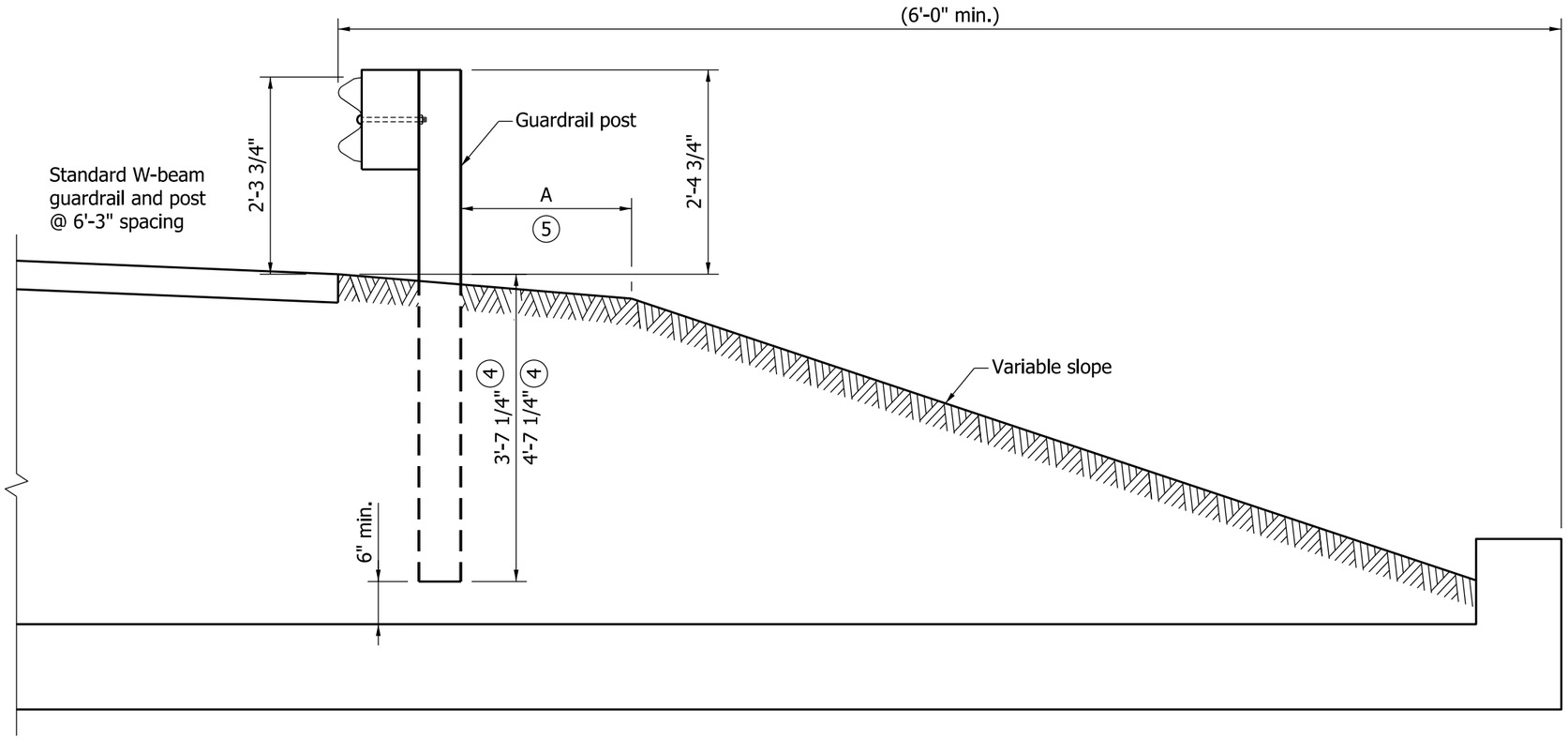

NOTES:

1. This drawing shall be used for any structure width provided cover over structure ≥ 4'-1 1/4".
2. The 6'-0" length guardrail post shall be used if 4'-1 1/4" ≤ cover ≤ 5'-1 1/4".
3. The 7'-0" long guardrail post shall be used if cover > 5'-1 1/4".

(4) 3'-7 1/4" for 6'-0" length post and 4'-7 1/4" for 7'-0" length post.

(5) A = 2'-0" for 6'-0" length post.
A = 0 (min.) for 7'-0" length post.

GUARDRAIL ASSEMBLY FOR COVER ≥ 4'-1 1/4"
FOR ANY STRUCTURE WIDTH

INDIANA DEPARTMENT OF TRANSPORTATION

GUARDRAIL ASSEMBLY FOR
ANY STRUCTURE WIDTH

SEPTEMBER 2011

STANDARD DRAWING NO. E 601-NWGA-04

RICHARD L. VanCLEAVE
REGISTERED
No. 9750
STATE OF INDIANA
PROFESSIONAL ENGINEER

DESIGN STANDARDS ENGINEER

/s/ Richard L. VanCleave 09/01/11
DESIGN STANDARDS ENGINEER DATE

/s/ Mark A. Miller 09/01/11
CHIEF HIGHWAY ENGINEER DATE

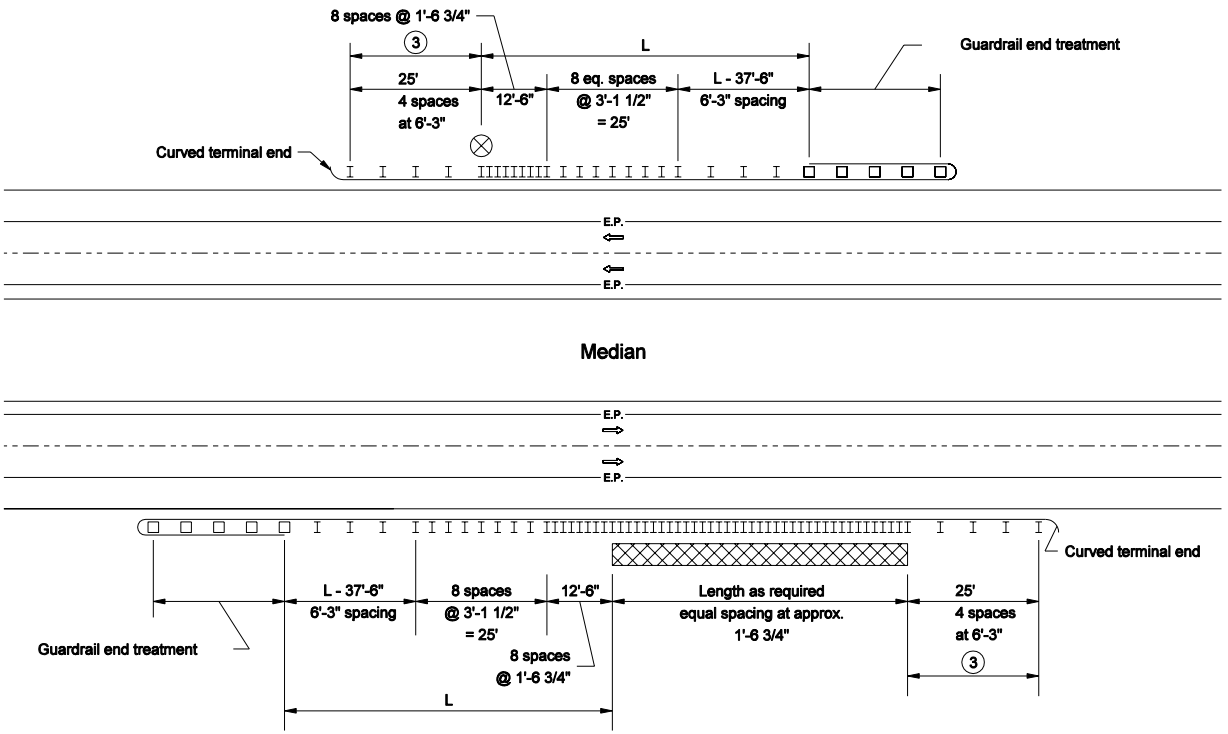

LEGEND

L = Length of need

⊗ Isolated obstruction

Extended obstruction

MULTI-LANE DIVIDED ROADWAY GUARDRAIL LAYOUT FOR GUARDRAIL FACE TO OBSTRUCTION DISTANCE ≥ 2'-9" BUT < 3'-3"

GENERAL NOTES

1. This configuration shall be used where W-beam guardrail at 1'-6 3/4" post spacing is specified on a divided lane roadway to shield an isolated or extended obstruction.
2. Dimensions and details not shown on this drawing shall be as shown on the plans.

(3.) Rectangular plate washers shall be installed at each post along this section.

INDIANA DEPARTMENT OF TRANSPORTATION

ROADSIDE OBSTRUCTION PROTECTION GUARDRAIL

MARCH 2005

STANDARD DRAWING NO. E 601-RHPG-01

RICHARD L. VanCLEAVE REGISTERED No. 9750 STATE OF INDIANA PROFESSIONAL ENGINEER

DESIGN STANDARDS ENGINEER

/s/ Richard L. VanCleave 3-01-05
DESIGN STANDARDS ENGINEER DATE

/s/ Richard K. Smutzer 3-01-05
CHIEF HIGHWAY ENGINEER DATE

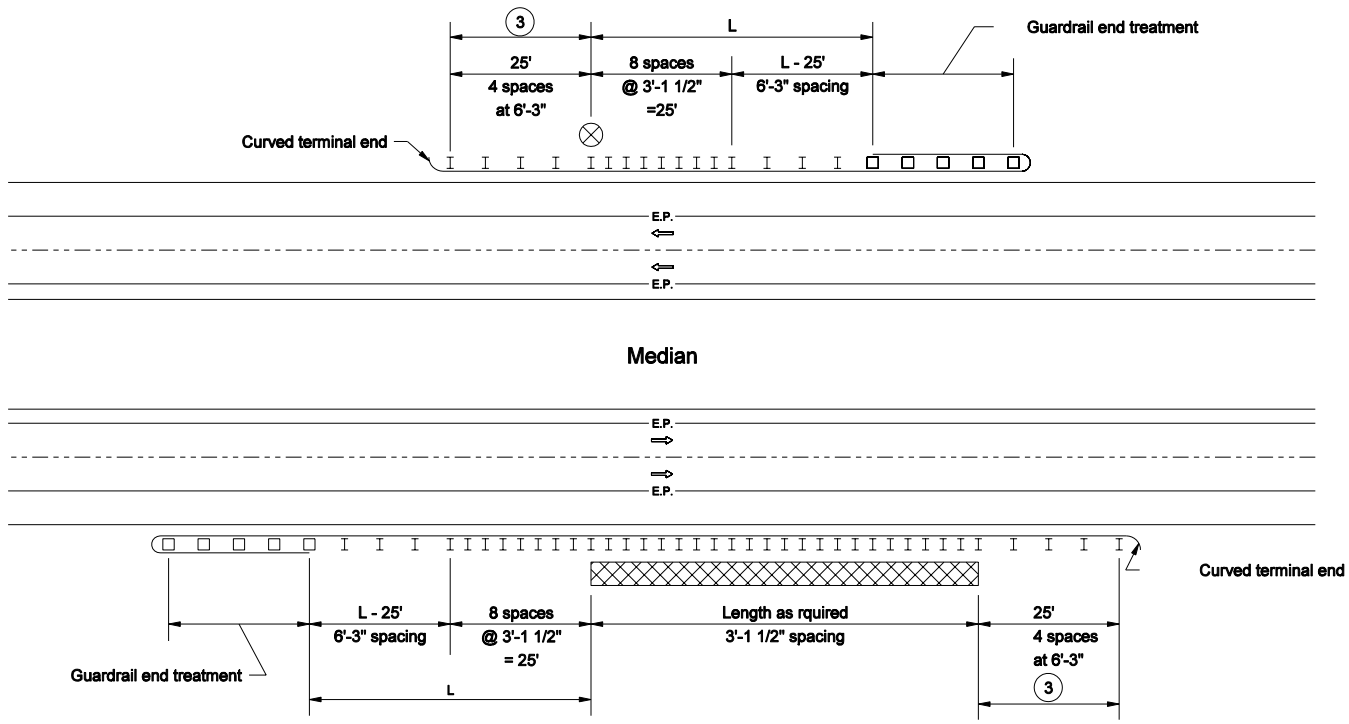

LEGEND

L = Length of need

Isolated obstruction

Extended obstruction

MULTI-LANE DIVIDED ROADWAY GUARDRAIL LAYOUT FOR GUARDRAIL FACE TO OBSTRUCTION DISTANCE ≥ 3'-3" BUT < 4'-3"

GENERAL NOTES

1. This configuration shall be used where W-beam guardrail at 3'-1 1/2" post spacing is specified on a divided lane roadway to shield an isolated or extended obstruction.
2. Dimensions and details not shown on this drawing shall be as shown on the plans.
3. Rectangular plate washers shall be installed at each post along this section.

INDIANA DEPARTMENT OF TRANSPORTATION

ROADSIDE OBSTRUCTION PROTECTION GUARDRAIL

MARCH 2005

STANDARD DRAWING NO. E 601-RHPG-02

RICHARD L. VanCLEAVE REGISTERED No. 9750 STATE OF INDIANA PROFESSIONAL ENGINEER

DESIGN STANDARDS ENGINEER

/s/ Richard L. VanCleave 3-01-05
DESIGN STANDARDS ENGINEER DATE

/s/ Richard K. Smutzer 3-01-05
CHIEF HIGHWAY ENGINEER DATE

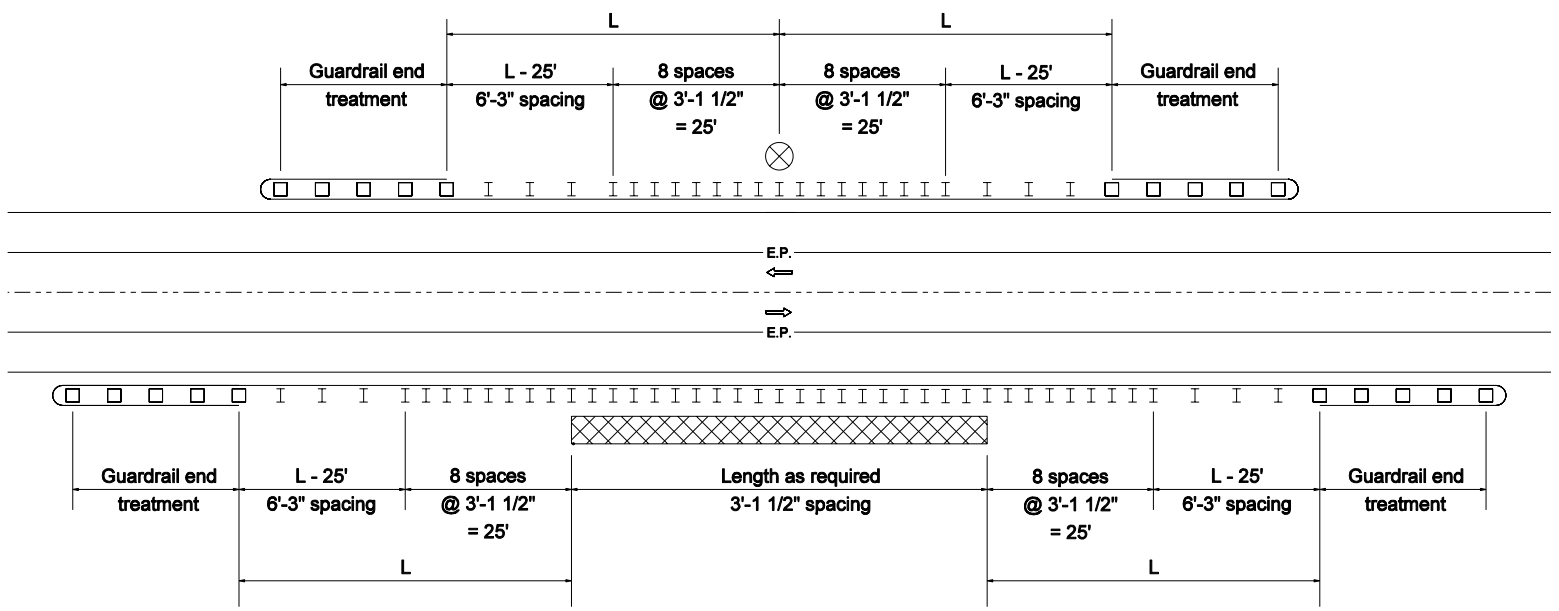

TWO-LANE TWO-WAY ROADWAY GUARDRAIL LAYOUT FOR GUARDRAIL FACE TO OBSTRUCTION DISTANCE ≥ 3'-3" BUT < 4'-3"

LEGEND

L = Length of need

⊗ Isolated obstruction

⊠ Extended obstruction

GENERAL NOTES

1. This configuration shall be used where W-beam guardrail at 3'-1 1/2" post spacing is specified on a two-lane two-way roadway to shield an isolated or extended obstruction.

2. Dimensions and details not shown on this drawing shall be as shown on the plans.

INDIANA DEPARTMENT OF TRANSPORTATION

ROADSIDE OBSTRUCTION PROTECTION GUARDRAIL

MARCH 2005

STANDARD DRAWING NO. E 601-RHPG-03

RICHARD L. VanCLEAVE REGISTERED No. 9750 STATE OF INDIANA PROFESSIONAL ENGINEER

DESIGN STANDARDS ENGINEER

/s/ Richard L. VanCleave 3-01-05
DESIGN STANDARDS ENGINEER DATE

/s/ Richard K. Smutzer 3-01-05
CHIEF HIGHWAY ENGINEER DATE

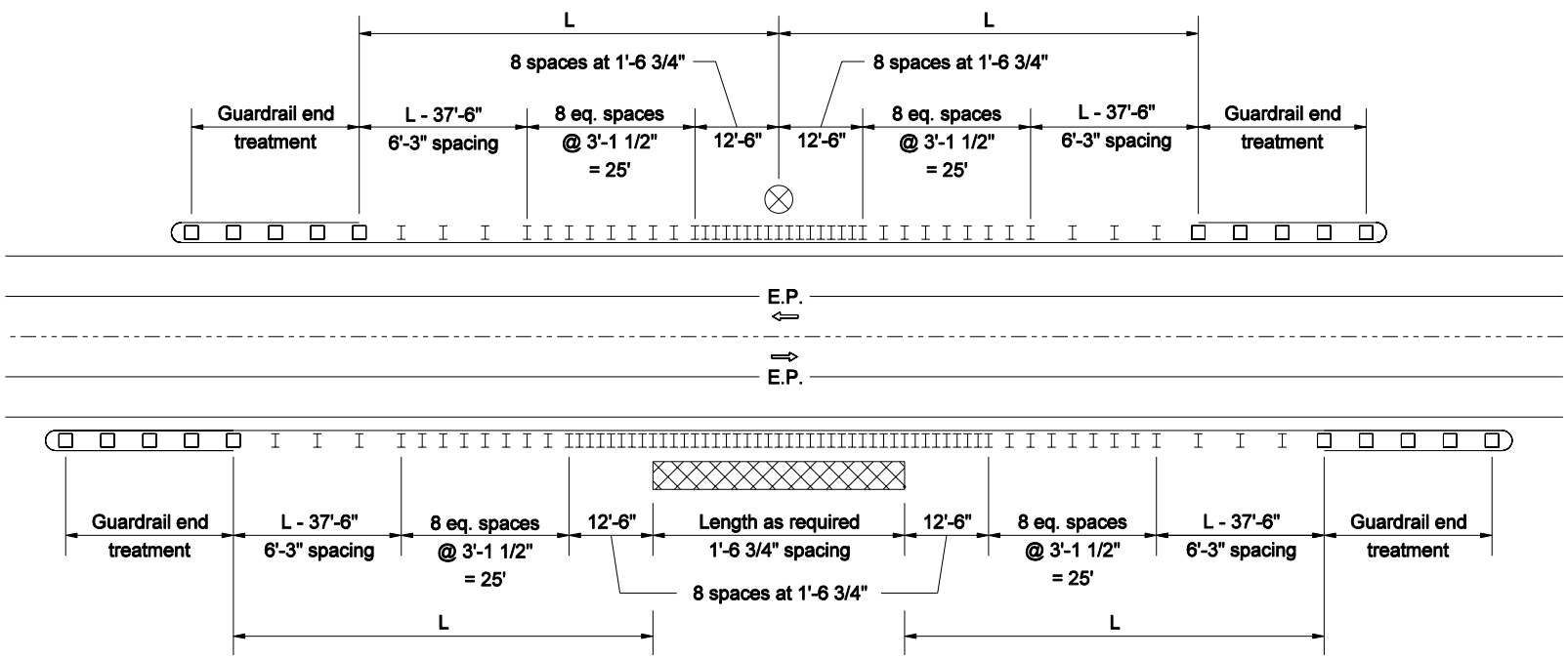

TWO-LANE TWO-WAY ROADWAY GUARDRAIL LAYOUT FOR GUARDRAIL FACE TO OBSTRUCTION DISTANCE ≥ 2'-9" BUT < 3'-3"

GENERAL NOTES

1. This configuration shall be used where W-beam guardrail at 1'-6 3/4" or 3'-1 1/2" post spacing is specified on a two-lane two-way roadway to shield an isolated or extended obstruction.
2. Dimensions and details not shown on this sheet shall be as shown on the plans.

LEGEND

L = Length of need

⊗ Isolated obstruction

▨ Extended obstruction

INDIANA DEPARTMENT OF TRANSPORTATION

ROADSIDE OBSTRUCTION PROTECTION GUARDRAIL

MARCH 2005

STANDARD DRAWING NO. E 601-RHPG-04

RICHARD L. VanCLEAVE REGISTERED No. 9750 STATE OF INDIANA PROFESSIONAL ENGINEER

DESIGN STANDARDS ENGINEER

/s/ Richard L. VanCleave 3-01-05
DESIGN STANDARDS ENGINEER DATE

/s/ Richard K. Smutzer 3-01-05
CHIEF HIGHWAY ENGINEER DATE

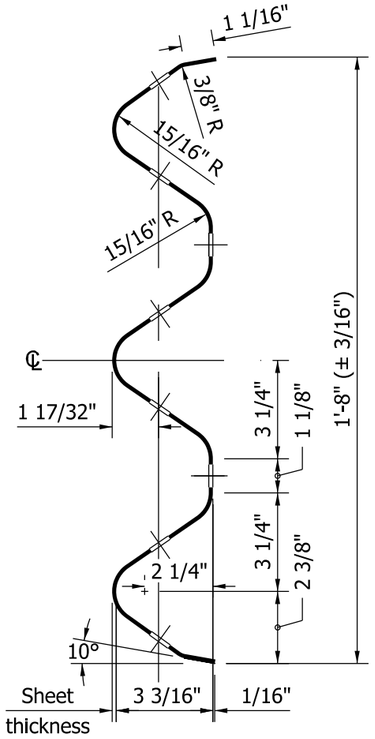

THRIE BEAM RAIL SECTION

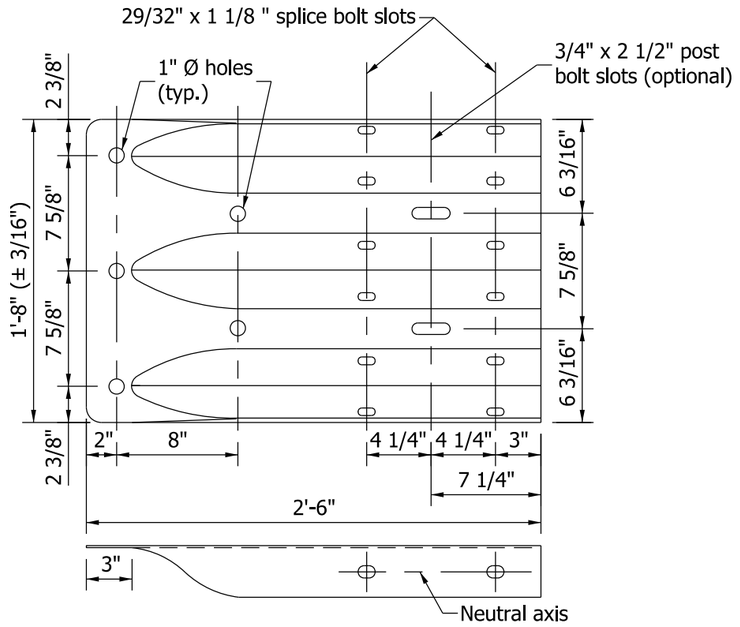

THRIE BEAM
TERMINAL CONNECTOR

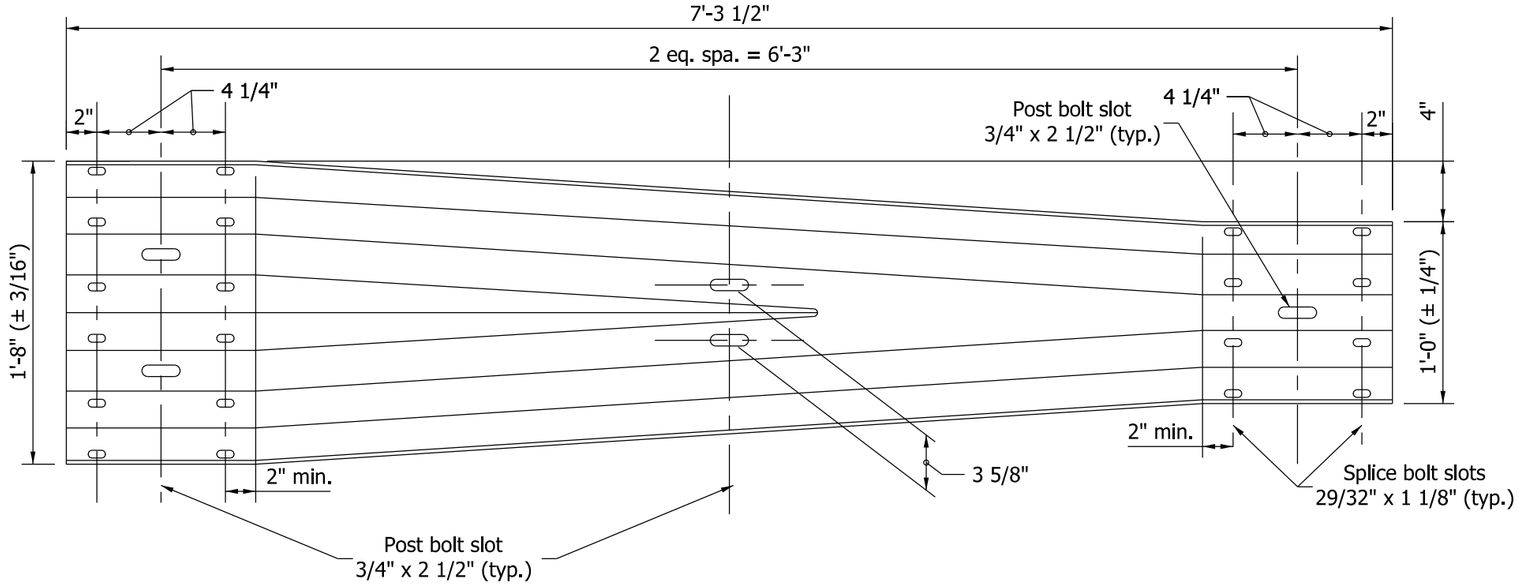

W-THRIE BEAM TRANSITION SECTION

INDIANA DEPARTMENT OF TRANSPORTATION

THRIE-BEAM
GUARDRAIL COMPONENTS

SEPTEMBER 2011

STANDARD DRAWING NO. E 601-TBGC-01

RICHARD L. VanCLEAVE
REGISTERED
No. 9750
STATE OF INDIANA
PROFESSIONAL ENGINEER

DESIGN STANDARDS ENGINEER

/s/ Richard L. VanCleave 09/01/11
DESIGN STANDARDS ENGINEER DATE

/s/ Mark A. Miller 09/01/11
CHIEF HIGHWAY ENGINEER DATE

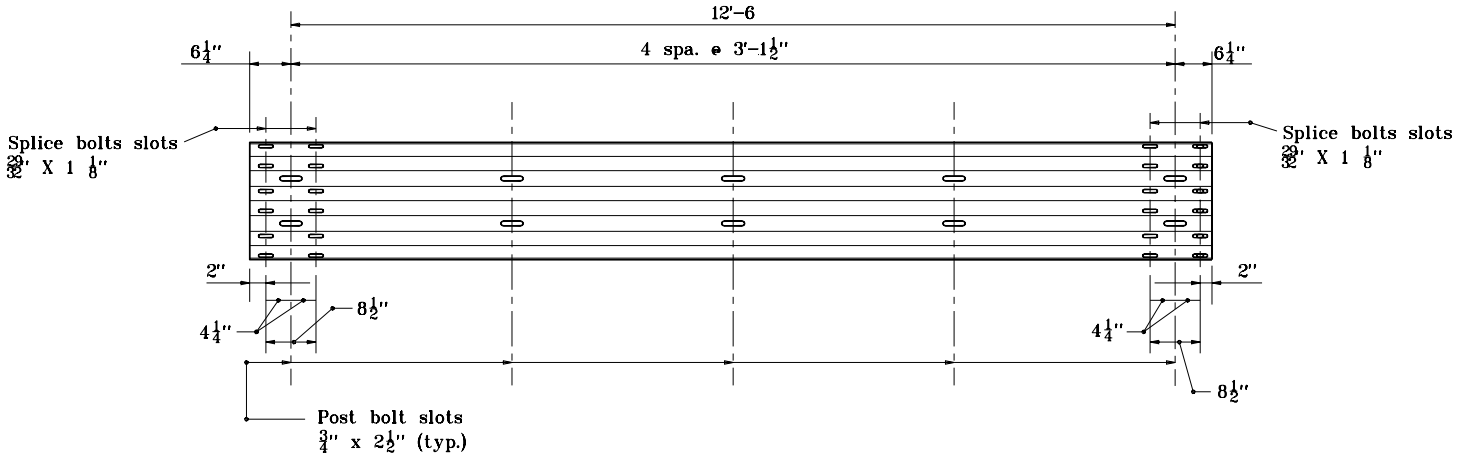

THRIE BEAM RAIL SECTION

INDIANA DEPARTMENT OF TRANSPORTATION

THRIE-BEAM GUARDRAIL COMPONENTS

APRIL 1996

STANDARD DRAWING NO. **E 601-TBGC-02**

ANTHONY L. UREMOVICH REGISTERED No. 18095 STATE OF INDIANA PROFESSIONAL ENGINEER

DESIGN STANDARDS ENGINEER

DETAILS PLACED IN THIS FORMAT 11-15-99

/s/ Anthony L. Uremovich 11-15-99
DESIGN STANDARDS ENGINEER DATE

/s/ Firooz Zandi 11-15-99
CHIEF HIGHWAY ENGINEER DATE

ORIGINALLY APPROVED 4-01-96

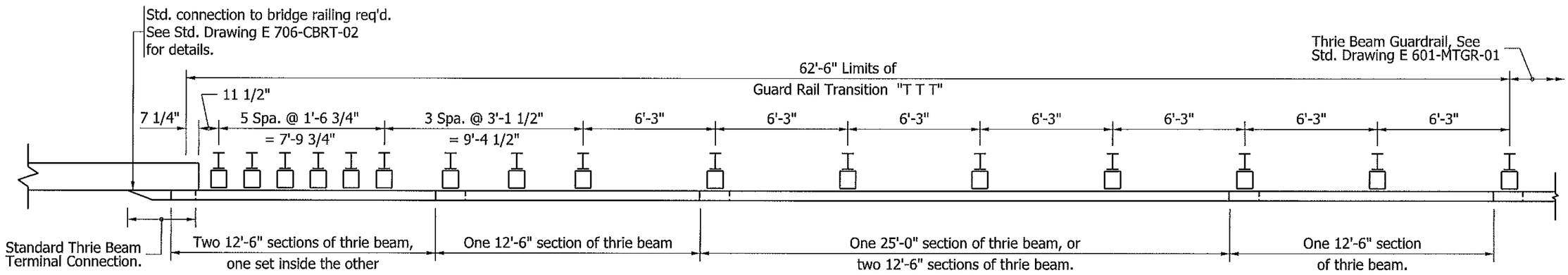

PARTIAL PLAN

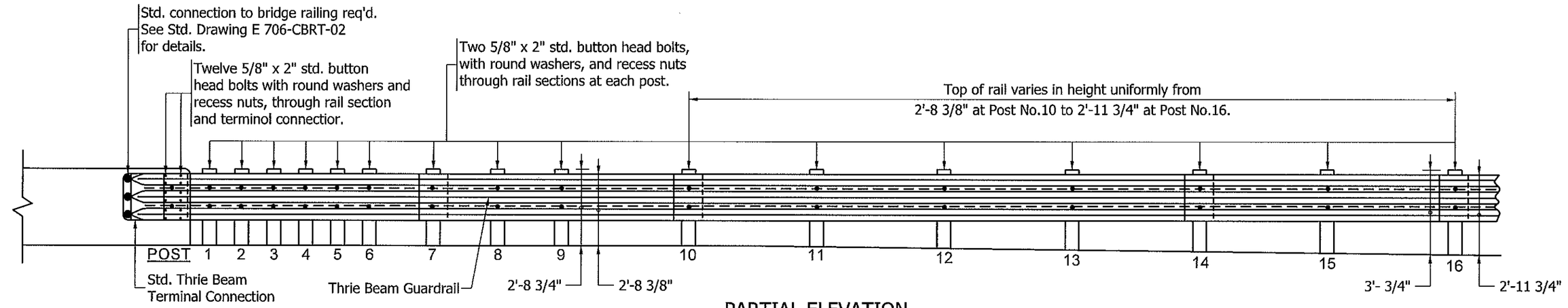

PARTIAL ELEVATION

NOTES:

1. See Standard Drawings E 601-TTGB-01 and E 601-TTGB-03 for Thrie Beam Guardrail post and blockout details from bridge rail to Post No. 10.

2. See Standard Drawing E 601-TTGB-03 for Thrie Beam Guardrail post and blockout details with the exception of height above shoulder surface for Posts No. 11 through 16.

INDIANA DEPARTMENT OF TRANSPORTATION

THRIE BEAM GUARDRAIL
TO THRIE BEAM GUARDRAIL
TRANSITION, TTT

SEPTEMBER 2011

STANDARD DRAWING NO. E 601-TMTT-01

RICHARD L. VanCLEAVE
REGISTERED
No. 9750
STATE OF INDIANA
PROFESSIONAL ENGINEER

DESIGN STANDARDS ENGINEER

Richard L. VanCleave 9-1-11
DESIGN STANDARDS ENGINEER DATE

9/1/11
CHIEF HIGHWAY ENGINEER DATE

GENERAL NOTES

1. This drawing shall be used where guardrail transition type GP is specified to connect W-beam guardrail to a pier or frame bent collision wall.
2. The details on this drawing are for the assembly and installation of the deflector components for connecting guardrail transition type GP to a pier or frame bent collision wall.
3. The anchor bolt shall be anchored with a chemical anchor system shown on the Department's List of Approved Chemical Anchor Systems.

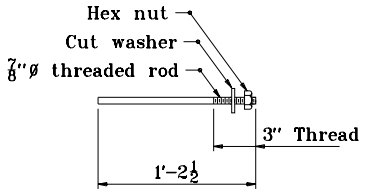

ANCHOR BOLT

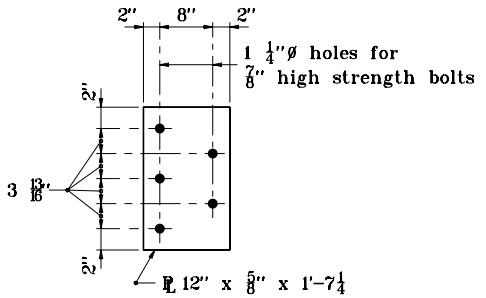

PLATE WASHER

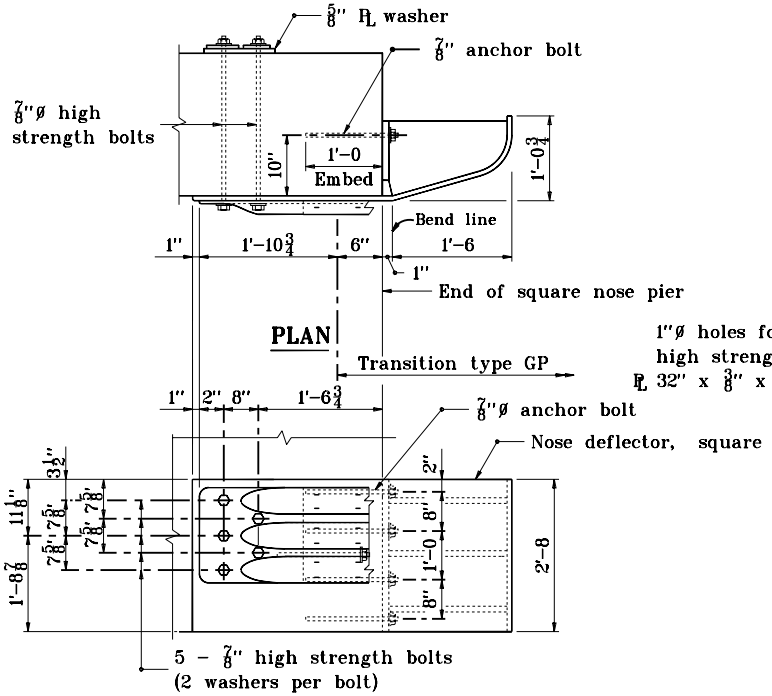

ELEVATION

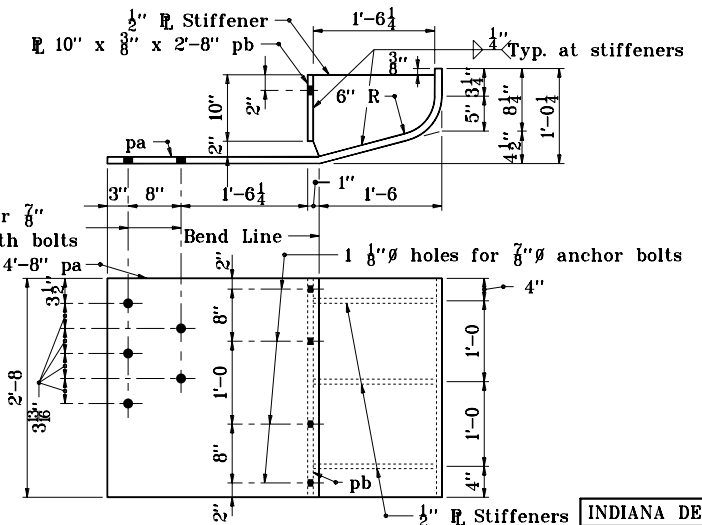

DETAIL OF NOSE DEFLECTOR - SQUARE

ATTACHMENT AT SQUARE NOSE PIER

INDIANA DEPARTMENT OF TRANSPORTATION

TRANSITION AT PIER TYPE GP

SEPTEMBER 1998

STANDARD DRAWING NO. **E 601-TPGP-01**

ANTHONY L. UREMOVICH REGISTERED No. 18095 STATE OF INDIANA PROFESSIONAL ENGINEER

DESIGN STANDARDS ENGINEER

DETAILS PLACED IN THIS FORMAT	11-15-99
/s/ Anthony L. Uremovich, DESIGN STANDARDS ENGINEER	11-15-99
/s/ Firooz Zandi, CHIEF HIGHWAY ENGINEER	11-15-99
ORIGINALLY APPROVED	9-01-98

Radius	A	B	C	D
1'-0	$2\frac{3}{4}$	$9\frac{1}{2}$	$11\frac{1}{4}$"	$2\frac{3}{4}$"
1'-$1\frac{1}{2}$	$2\frac{3}{16}$	$10\frac{1}{2}$	$9\frac{13}{16}$"	$4\frac{3}{8}$"
1'-3	$1\frac{3}{4}$	$11\frac{1}{2}$	$8\frac{9}{16}$"	$4\frac{3}{8}$"
1'-$4\frac{1}{2}$	$1\frac{1}{2}$	$12\frac{1}{2}$	$7\frac{3}{16}$"	$7\frac{3}{8}$"
1'-6	$1\frac{1}{4}$	$13\frac{1}{2}$	$6\frac{1}{4}$"	$8\frac{3}{4}$"

GENERAL NOTES

1. This drawing shall be used where guardrail transition type GP is specified to connect W-beam guardrail to a pier or frame bent collision wall.

2. The details on this drawing are for the assembly and installation of the deflector components for connecting guardrail transition type GP to a pier or frame bent collision wall.

(3) See Standard Drawing E 601-TPGP-01 for anchor bolt and plate washer details.

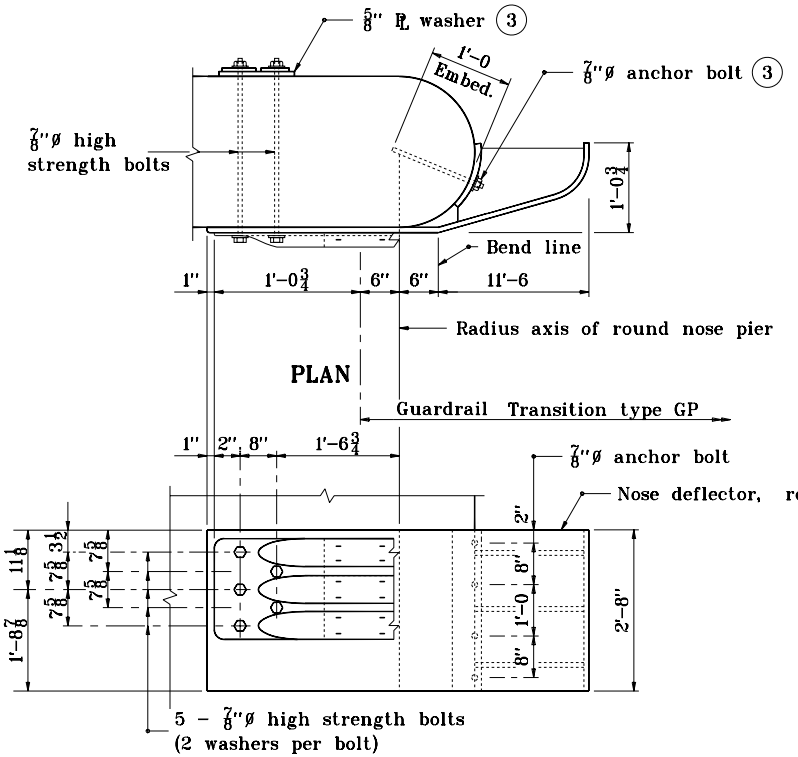

ELEVATION

ATTACHMENT AT ROUND NOSE PIER

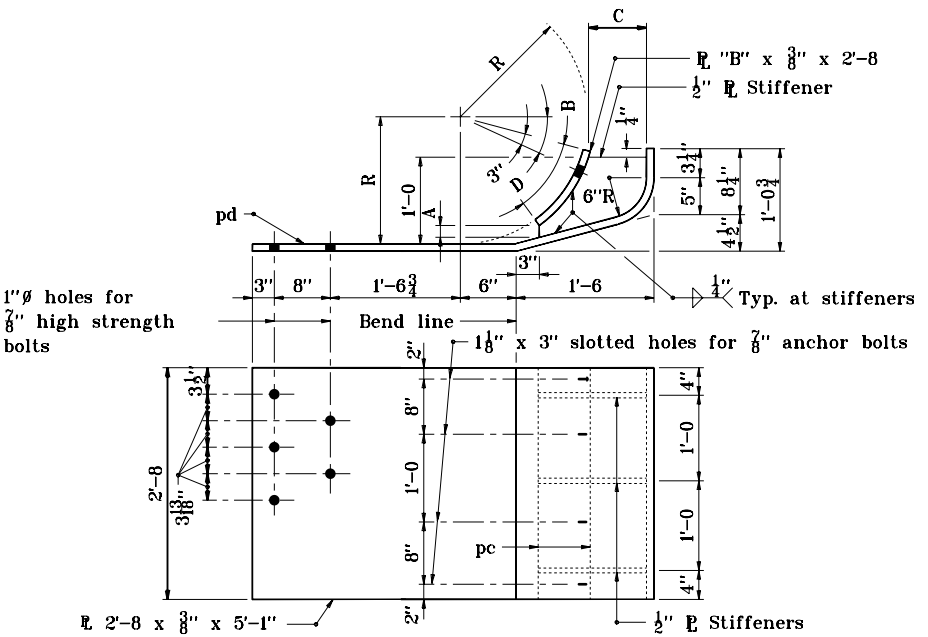

DETAIL OF NOSE DEFLECTOR - ROUND

INDIANA DEPARTMENT OF TRANSPORTATION

TRANSITION AT PIER TYPE GP

SEPTEMBER 1998

STANDARD DRAWING NO. E 601-TPGP-02

ANTHONY L. UREMOVICH REGISTERED No. 18095 STATE OF INDIANA PROFESSIONAL ENGINEER

DESIGN STANDARDS ENGINEER

DETAILS PLACED IN THIS FORMAT 11-15-99

/s/ Anthony L. Uremovich 11-15-99
DESIGN STANDARDS ENGINEER DATE

/s/ Firooz Zandi 11-15-99
CHIEF HIGHWAY ENGINEER DATE

ORIGINALLY APPROVED 9-01-98

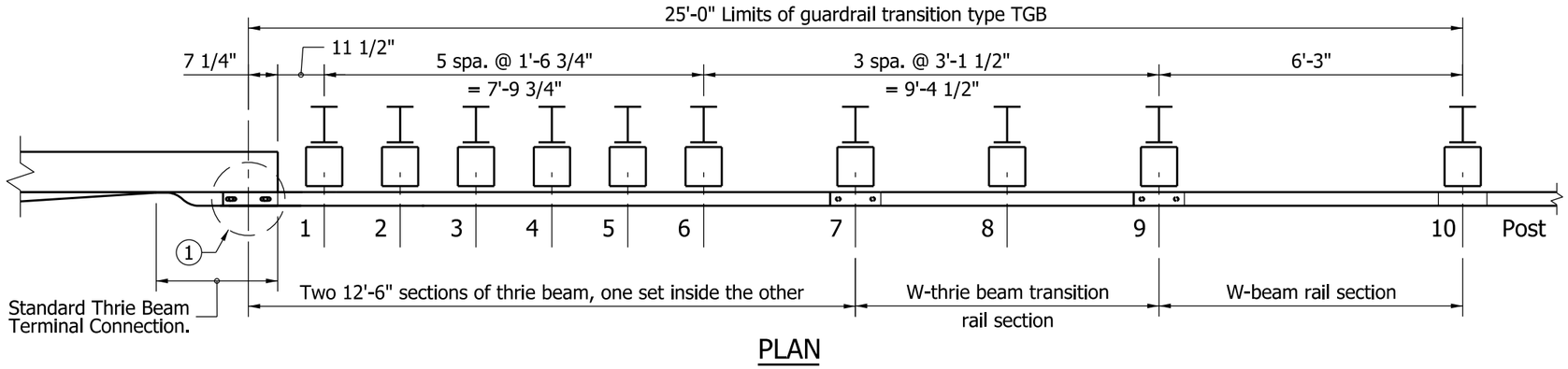

PLAN

NOTES:

1. See Standard Drawing E 601-TTGB-02 for Lap Detail.
2. See Standard Drawing E 601-TBGC-01 for connection details.
3. See Standard Drawings E 601-TTGB-03 through -05 for post and block details.

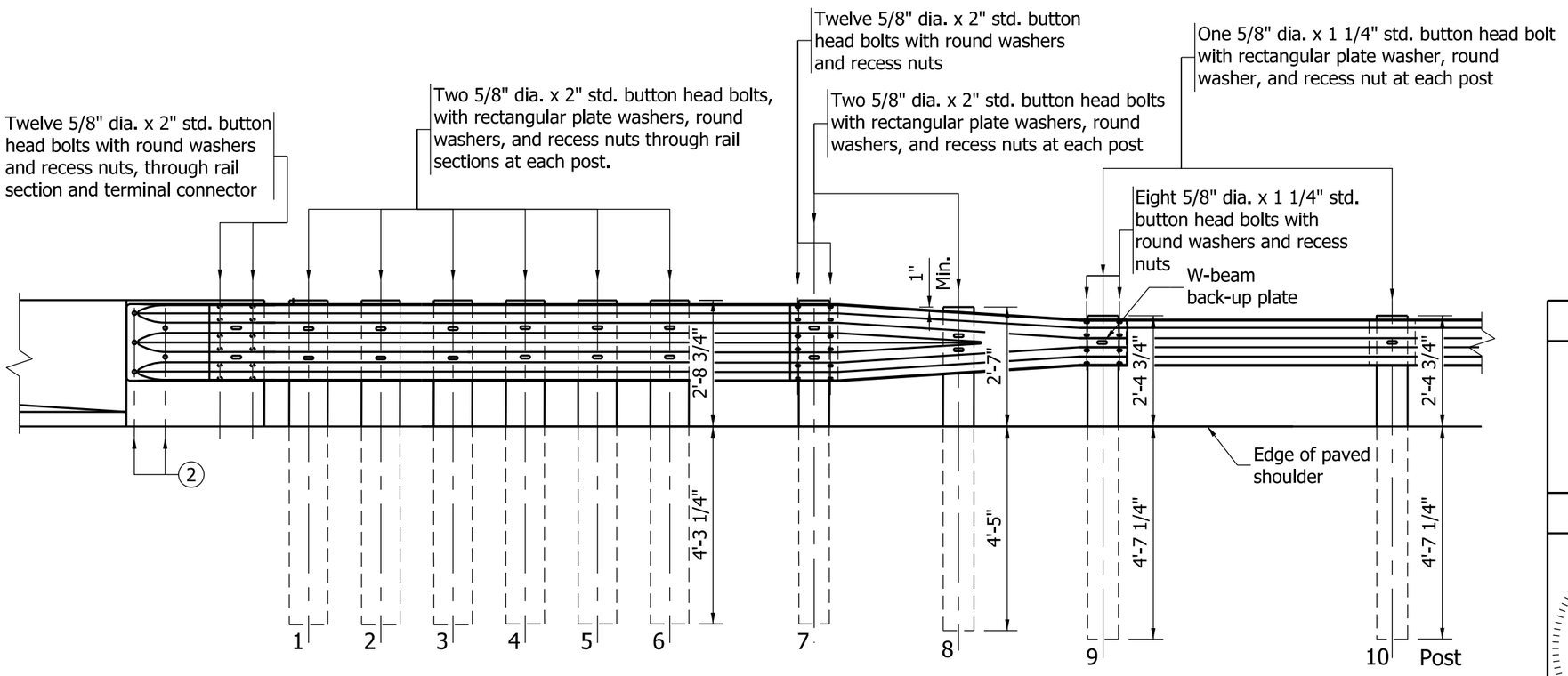

ELEVATION

INDIANA DEPARTMENT OF TRANSPORTATION

GUARDRAIL TRANSITION
TYPE TGB

SEPTEMBER 2011

STANDARD DRAWING NO. E 601-TTGB-01

RICHARD L. VanCLEAVE
REGISTERED
No. 9750
STATE OF INDIANA
PROFESSIONAL ENGINEER

DESIGN STANDARDS ENGINEER

/s/ Richard L. VanCleave 09/01/11
DESIGN STANDARDS ENGINEER DATE

/s/ Mark A. Miller 09/01/11
CHIEF HIGHWAY ENGINEER DATE

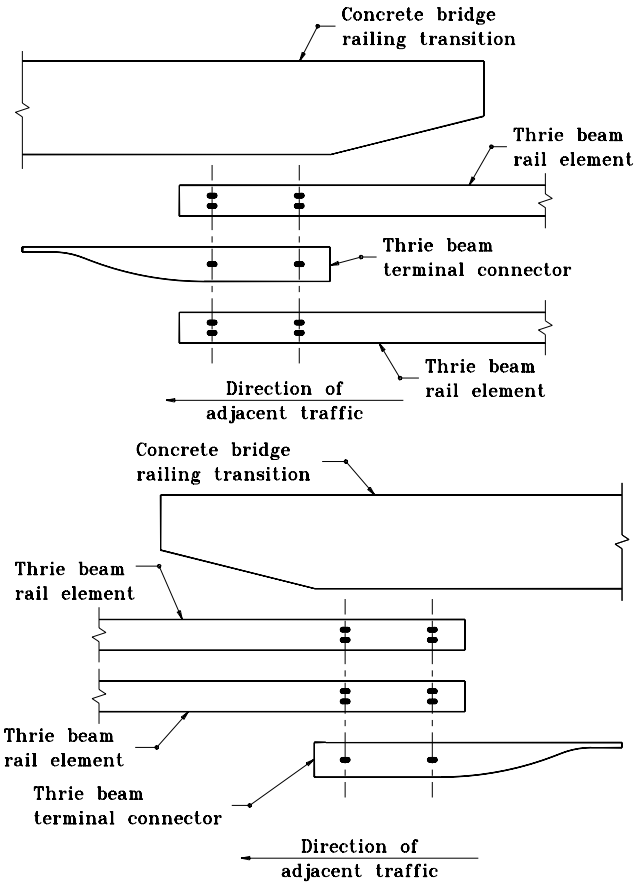

LAP DETAIL AT BRIDGE RAILING TRANSITION

INDIANA DEPARTMENT OF TRANSPORTATION

GUARDRAIL TRANSITION
TYPE TGB

MAY 2000

STANDARD DRAWING NO. **E 601-TTGB-02**

ANTHONY L. UREMOVICH REGISTERED No. 18095 STATE OF INDIANA PROFESSIONAL ENGINEER

DESIGN STANDARDS ENGINEER

/s/ Anthony L. Uremovich 5-01-00
DESIGN STANDARDS ENGINEER — DATE

/s/ Firooz Zandi 5-01-00
CHIEF HIGHWAY ENGINEER — DATE

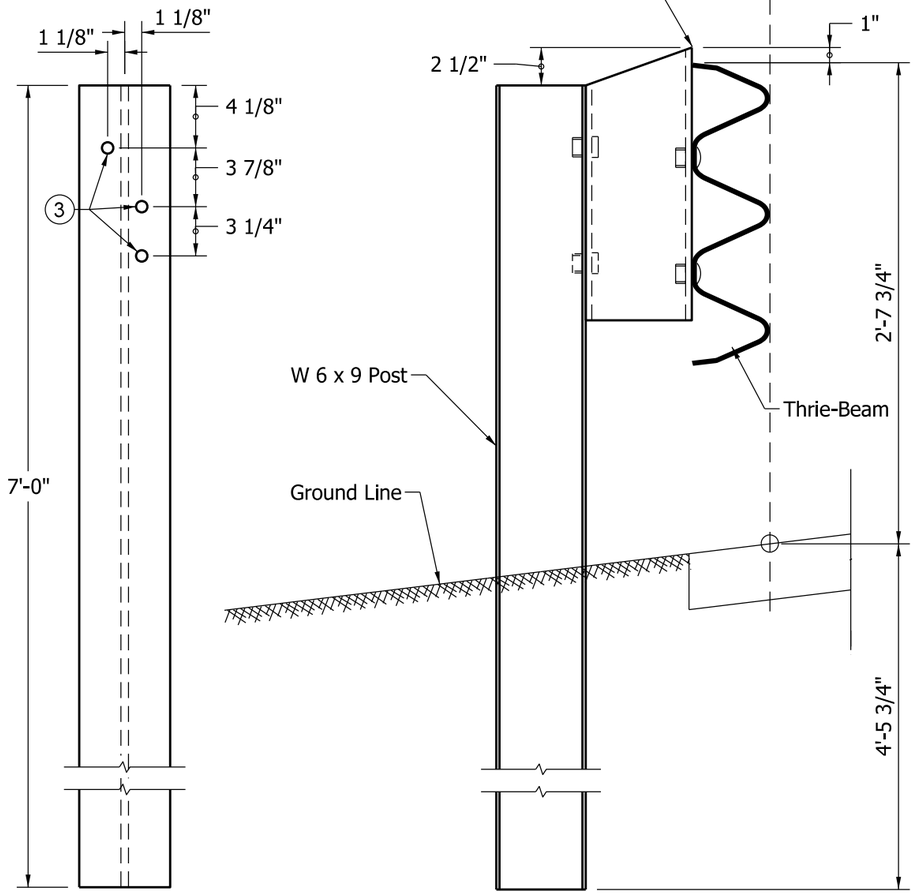

FRONT VIEW SIDE VIEW

W 6 x 9 POST DETAILS

NOTES:

1. All holes drilled or punched to 3/4" dia.
2. See Standard Drawing E 601-TTGB-01 for post numbers.
3. Hole pattern for posts numbers 8 through 10 may be drilled in back flange. See Standard drawing E 601-TTGB-04 or E 601-TTGB-05.

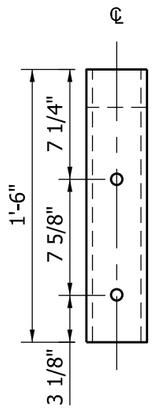

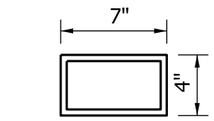

TOP VIEW

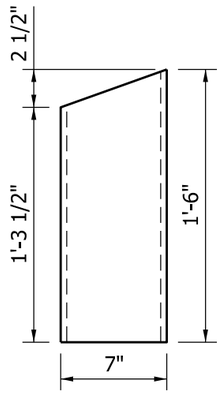

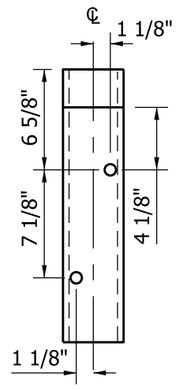

FRONT VIEW SIDE VIEW BACK VIEW

TS 7 x 4 x 3/16" BLOCK DETAILS

POSTS 1 THROUGH 7

INDIANA DEPARTMENT OF TRANSPORTATION

GUARDRAIL TRANSITION
TYPE TGB

SEPTEMBER 2011

STANDARD DRAWING NO. E 601-TTGB-03

RICHARD L. VanCLEAVE REGISTERED No. 9750 STATE OF INDIANA PROFESSIONAL ENGINEER

DESIGN STANDARDS ENGINEER

/s/ Richard L. VanCleave 09/01/11
DESIGN STANDARDS ENGINEER DATE

/s/ Mark A. Miller 09/01/11
CHIEF HIGHWAY ENGINEER DATE

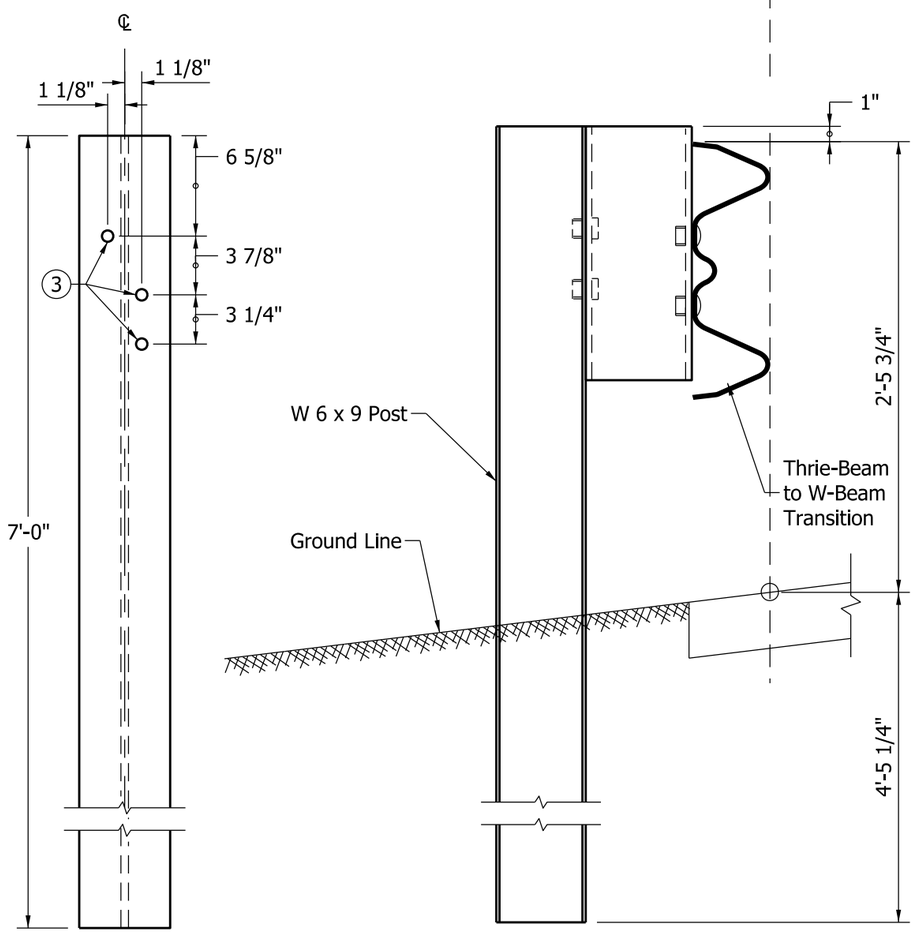

FRONT VIEW SIDE VIEW

W 6 x 9 POST DETAILS

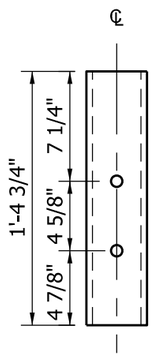

FRONT VIEW

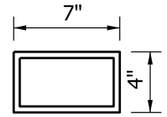

TOP VIEW

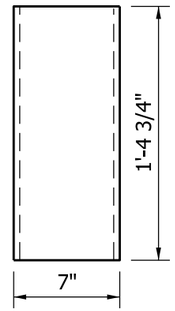

SIDE VIEW

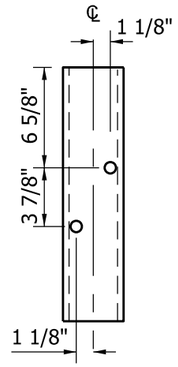

BACK VIEW

NOTES:

1. All holes drilled or punched to 3/4" dia.
2. See Standard Drawing E 601-TTGB-01 for post numbers.
3. Hole pattern for posts numbers 1 through 7 may be drilled in back flange. See Standard drawing E 601-TTGB-03.

TS 7 x 4 x 3/16" BLOCK DETAILS

POST 8

INDIANA DEPARTMENT OF TRANSPORTATION

GUARDRAIL TRANSITION
TYPE TGB

SEPTEMBER 2011

STANDARD DRAWING NO. E 601-TTGB-04

RICHARD L. VanCLEAVE
REGISTERED
No. 9750
STATE OF INDIANA
PROFESSIONAL ENGINEER

DESIGN STANDARDS ENGINEER

/s/ Richard L. VanCleave 09/01/11
DESIGN STANDARDS ENGINEER DATE

/s/ Mark A. Miller 09/01/11
CHIEF HIGHWAY ENGINEER DATE

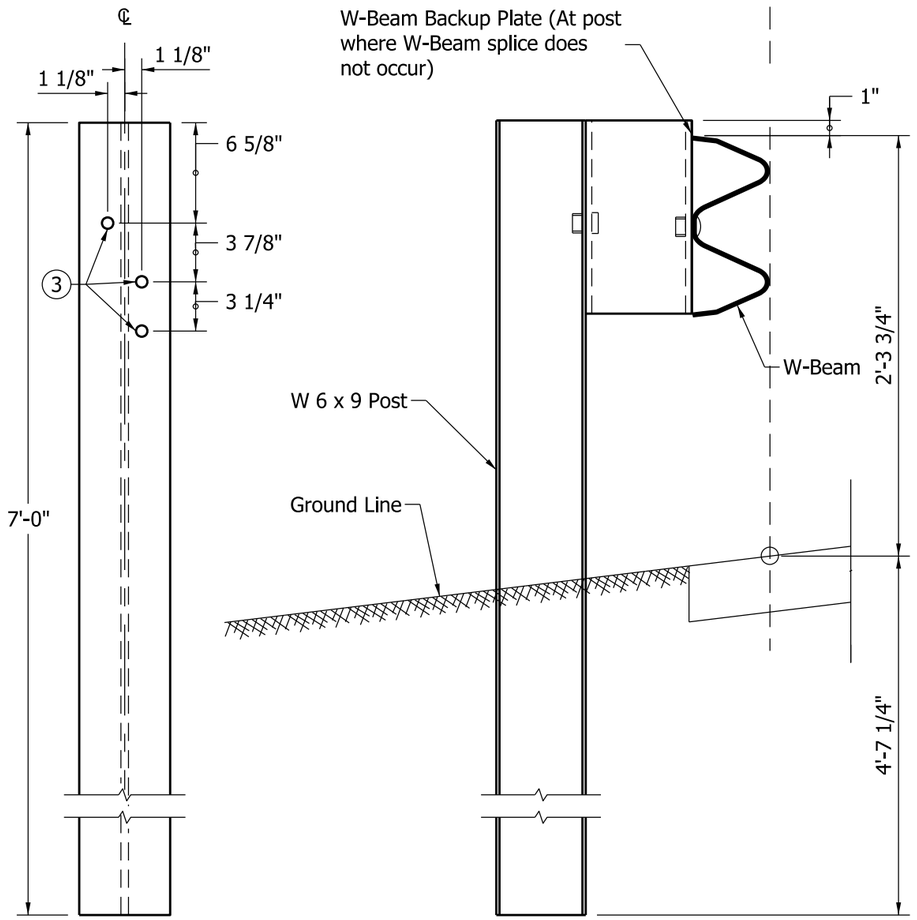

FRONT VIEW SIDE VIEW

W 6 x 9 POST DETAILS

NOTES:

1. All holes drilled or punched to 3/4" dia.
2. See Standard Drawing E 601-TTGB-01 for post numbers.
3. Hole pattern for posts numbers 1 through 7 may be drilled in back flange. See Standard drawing E 601-TTGB-03.

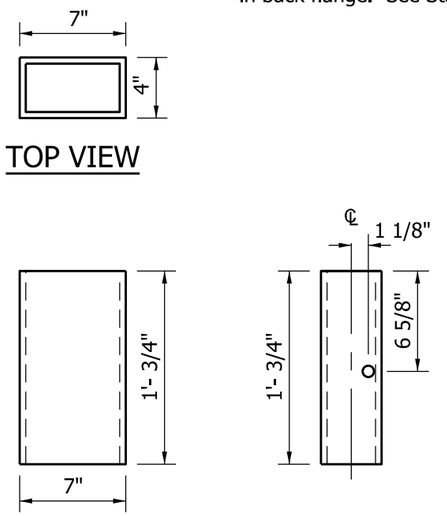

TOP VIEW

FRONT VIEW SIDE VIEW BACK VIEW

TS 7 x 4 x 3/16" BLOCK DETAILS
POSTS 9 and 10

INDIANA DEPARTMENT OF TRANSPORTATION

GUARDRAIL TRANSITION
TYPE TGB

SEPTEMBER 2011

STANDARD DRAWING NO. E 601-TTGB-05

RICHARD L. VanCLEAVE REGISTERED No. 9750 STATE OF INDIANA PROFESSIONAL ENGINEER

DESIGN STANDARDS ENGINEER

/s/ Richard L. VanCleave 09/01/11
DESIGN STANDARDS ENGINEER DATE

/s/ Mark A. Miller 09/01/11
CHIEF HIGHWAY ENGINEER DATE

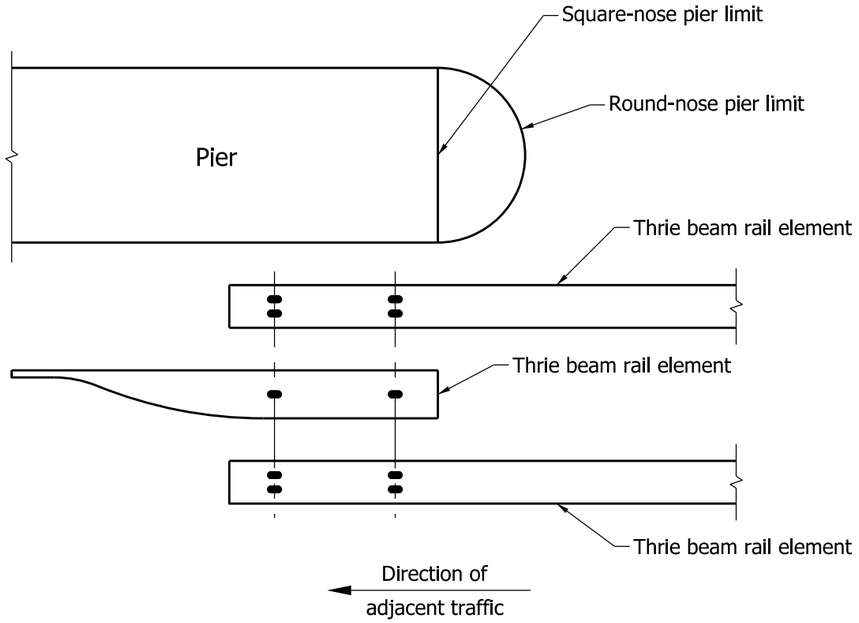

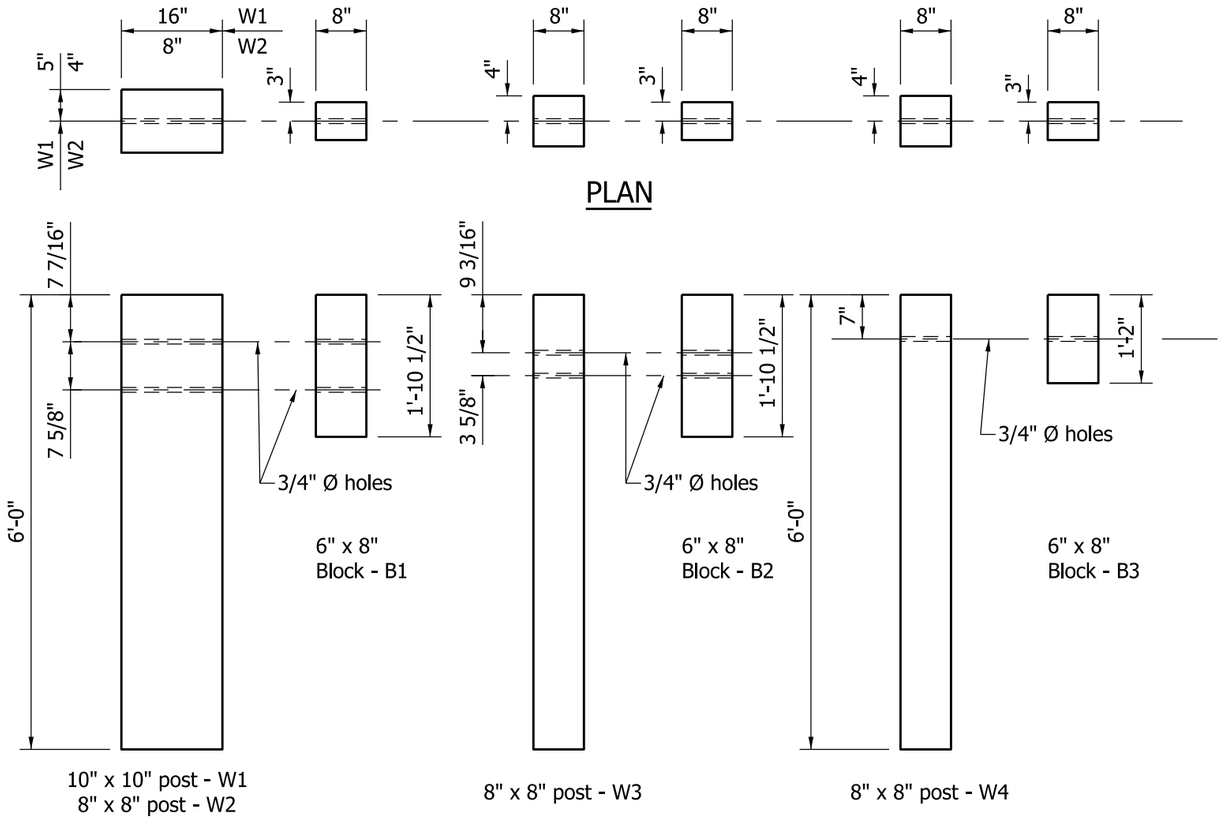

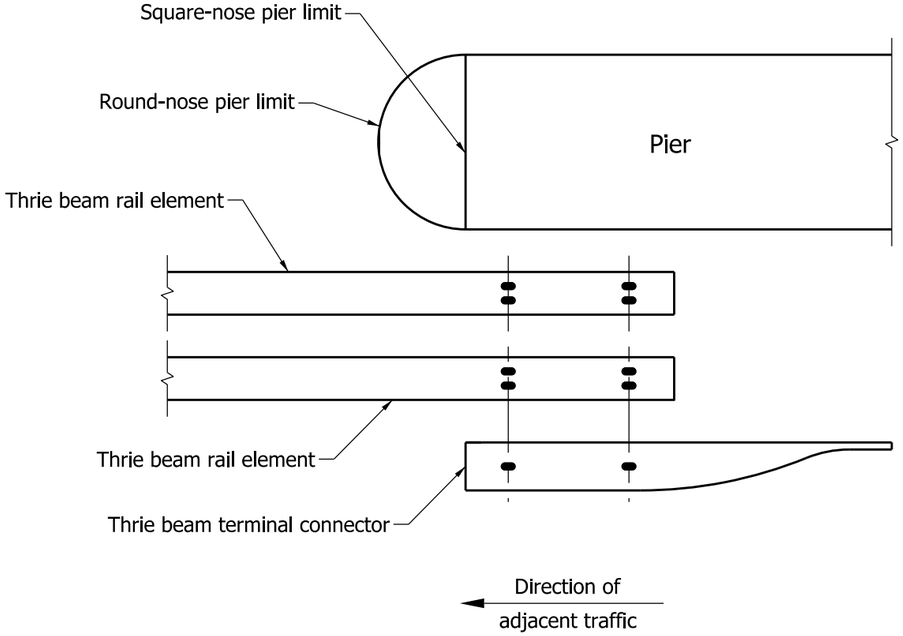

LAP DETAIL AT PIER CONNECTION

INDIANA DEPARTMENT OF TRANSPORTATION

GUARDRAIL TRANSITION
TYPE GP

SEPTEMBER 2011

STANDARD DRAWING NO. E 601-TTGP-01

RICHARD L. VanCLEAVE
REGISTERED
No. 9750
STATE OF INDIANA
PROFESSIONAL ENGINEER

DESIGN STANDARDS ENGINEER

/s/ Richard L. VanCleave 09/01/11
DESIGN STANDARDS ENGINEER DATE

/s/ Mark A. Miller 09/01/11
CHIEF HIGHWAY ENGINEER DATE

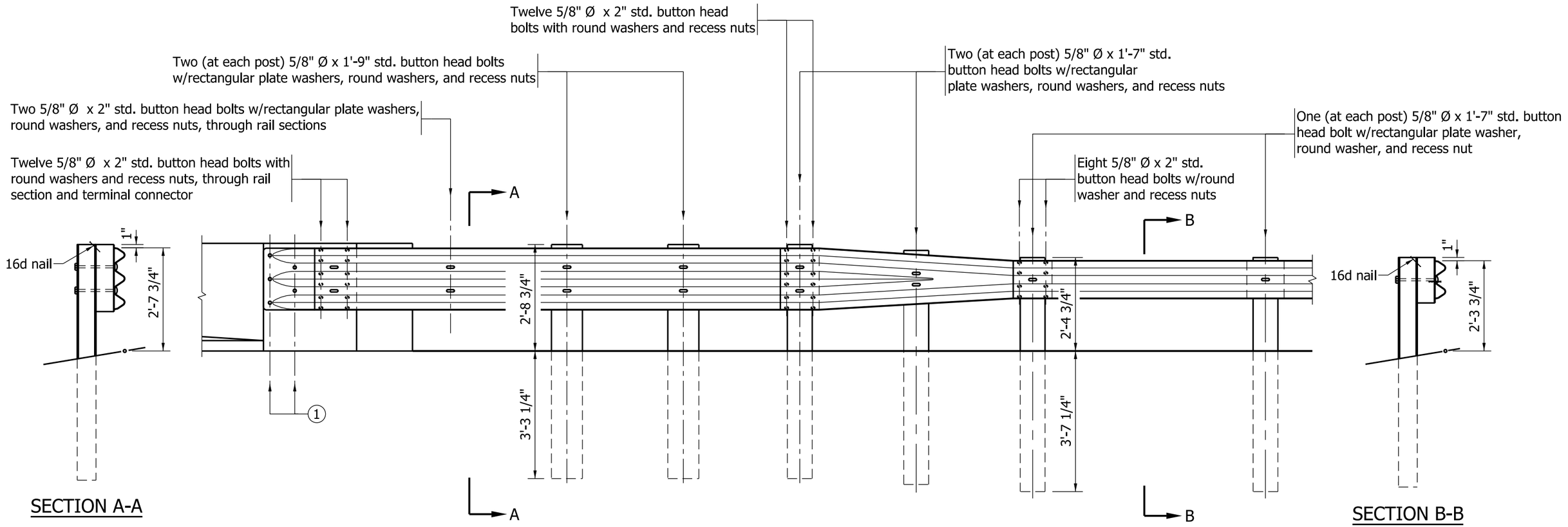

NOTE:

(1) See pier connection details for connection of terminal connector. See Standard Drawing E 601-TTGP-01 (use proper end detail).

INDIANA DEPARTMENT OF TRANSPORTATION

GUARDRAIL TRANSITION
TYPE GP

SEPTEMBER 2011

STANDARD DRAWING NO. E 601-TTGP-02

RICHARD L. VanCLEAVE REGISTERED No. 9750 STATE OF INDIANA PROFESSIONAL ENGINEER

DESIGN STANDARDS ENGINEER

/s/ Richard L. VanCleave 09/01/11
DESIGN STANDARDS ENGINEER DATE

/s/ Mark A. Miller 09/01/11
CHIEF HIGHWAY ENGINEER DATE

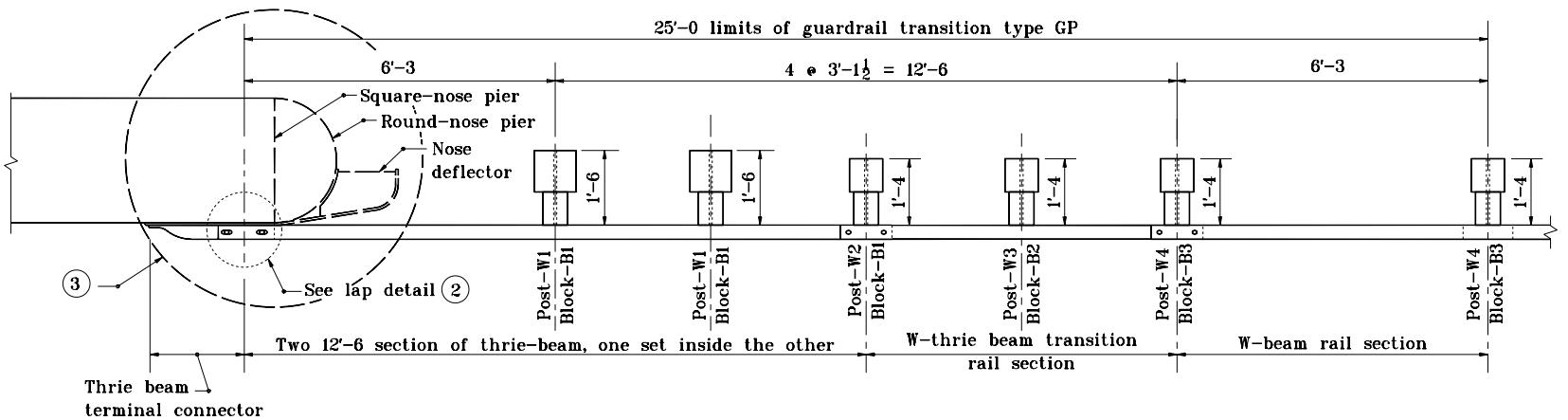

PLAN

NOTES:

1. This drawing shall be used where guardrail transition type GP is specified to connect W-beam guardrail to a pier or frame bent collision wall.

2. See Standard Drawing E 601-TTGP-01 for lap detail at pier connection.

3. See Standard Drawings E 601-TPGP-01 and -02 for nose deflector details.

INDIANA DEPARTMENT OF TRANSPORTATION

GUARDRAIL TRANSITION TYPE GP

APRIL 1996

STANDARD DRAWING NO. **E 601-TTGP-03**

ANTHONY L. UREMOVICH REGISTERED No. 18095 STATE OF INDIANA PROFESSIONAL ENGINEER

DESIGN STANDARDS ENGINEER

DETAILS PLACED IN THIS FORMAT	11-15-99
/s/ Anthony L. Uremovich, DESIGN STANDARDS ENGINEER	11-15-99
/s/ Firooz Zandi, CHIEF HIGHWAY ENGINEER	11-15-99
ORIGINALLY APPROVED	4-01-96

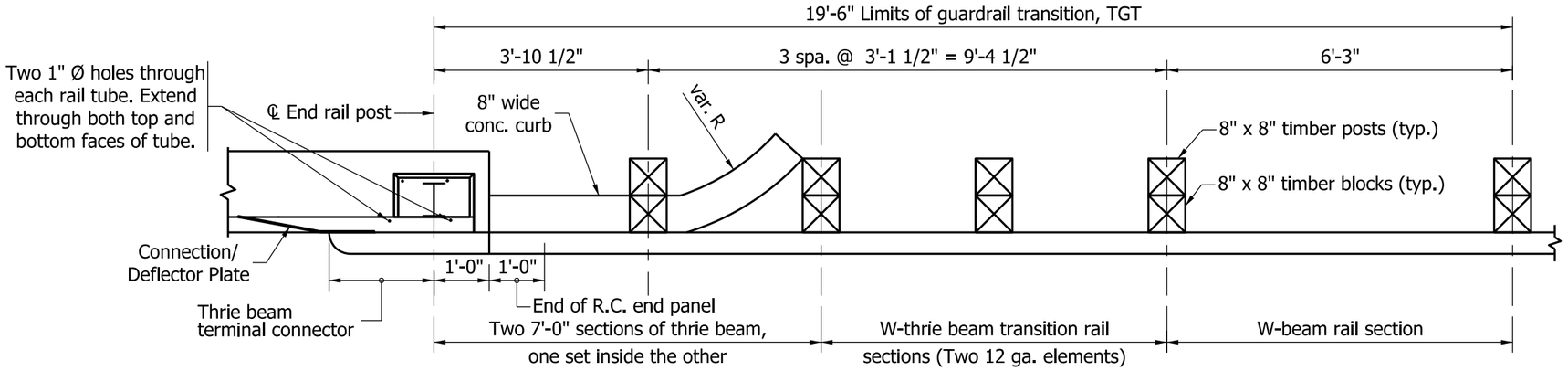

PLAN

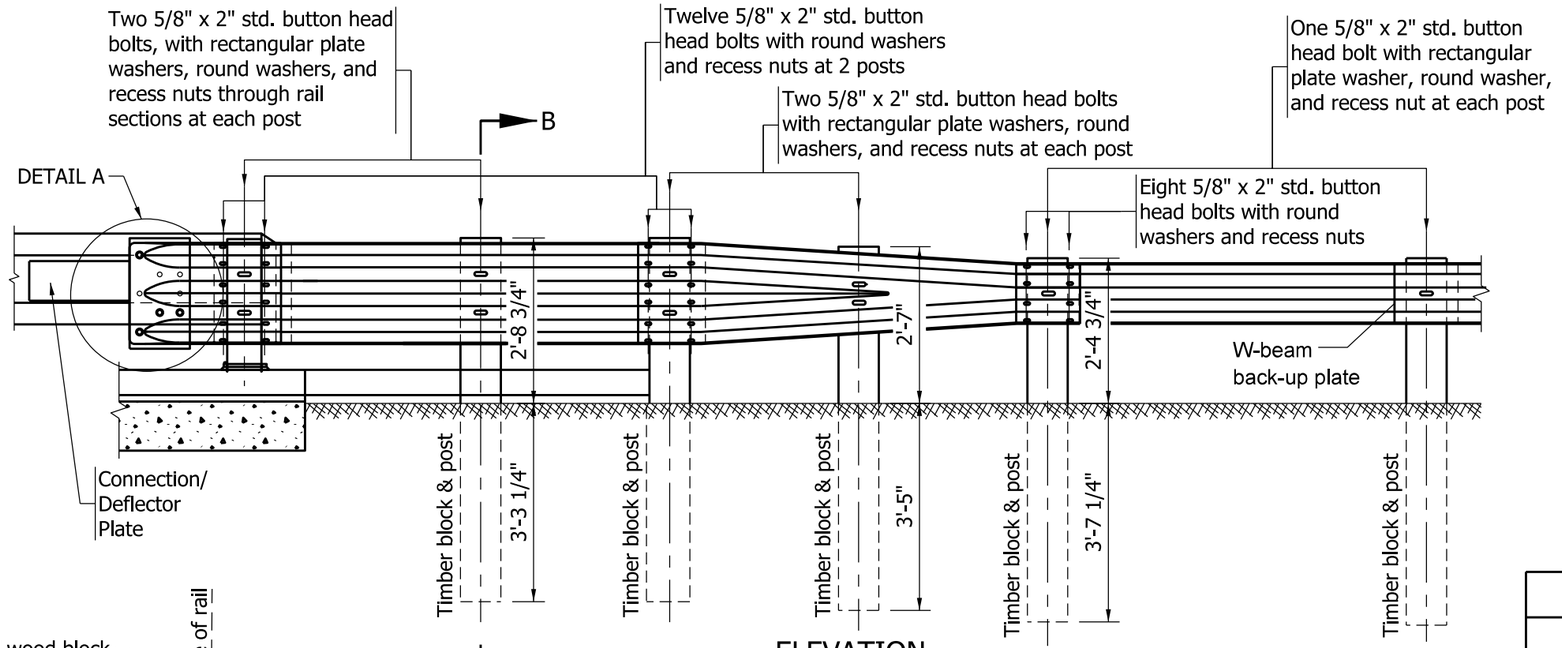

ELEVATION

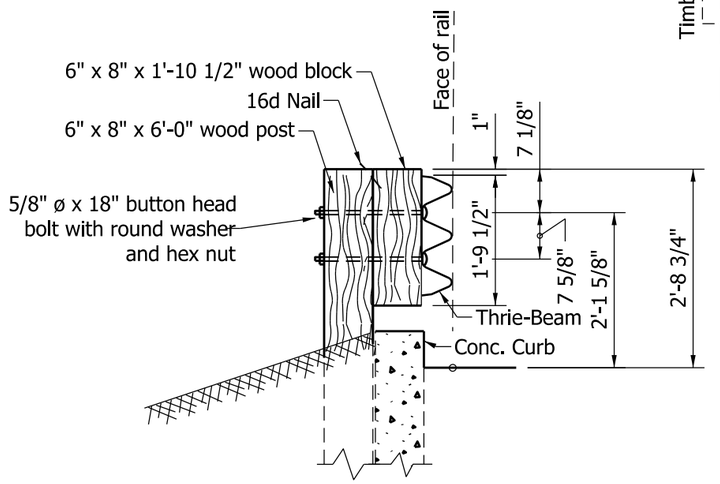

SECTION B-B

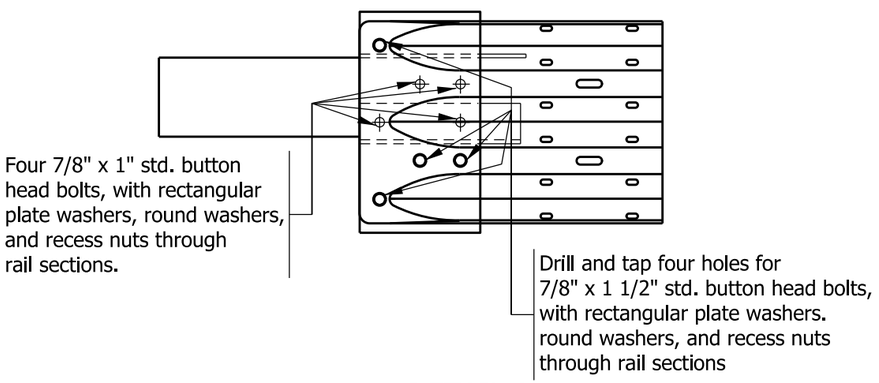

DETAIL A

NOTES:

1. See Standard Drawing E 601-TBGC-01 and E 601-TBGC-02 for thrie-beam transition details.
2. See Standard Drawing E 601-TTGT-02 for transition connection detail, timber post detail and timber block detail.

INDIANA DEPARTMENT OF TRANSPORTATION

GUARDRAIL TRANSITION, TGT

SEPTEMBER 2011

STANDARD DRAWING NO. E 601-TTGT-01

RICHARD L. VanCLEAVE REGISTERED No. 9750 STATE OF INDIANA PROFESSIONAL ENGINEER

DESIGN STANDARDS ENGINEER

/s/ Richard L. VanCleave 09/01/11
DESIGN STANDARDS ENGINEER DATE

/s/ Mark A. Miller 09/01/11
CHIEF HIGHWAY ENGINEER DATE

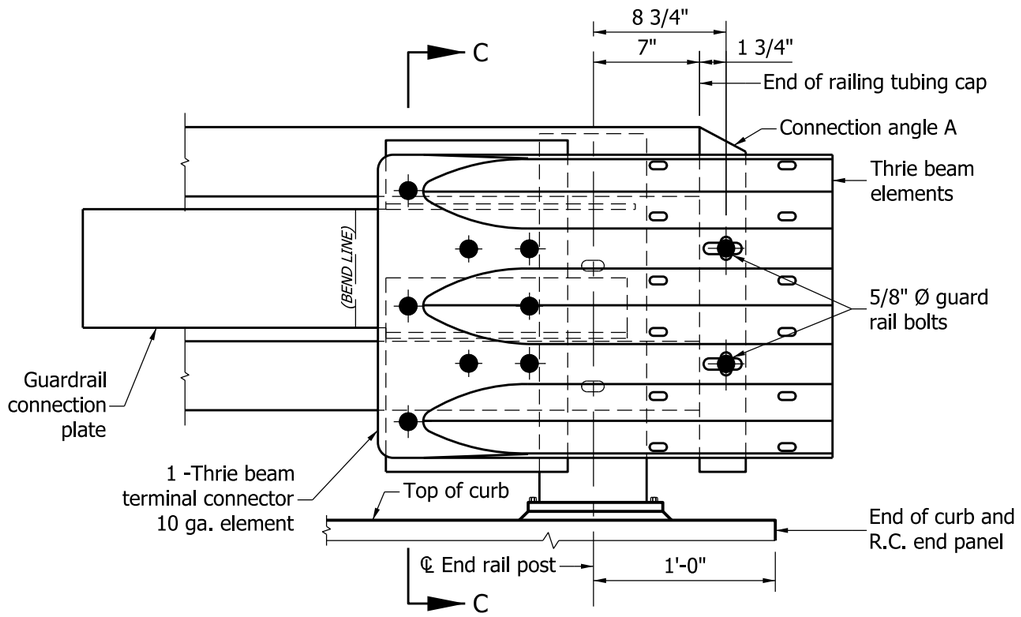

ELEVATION - TRANSITION CONNECTION

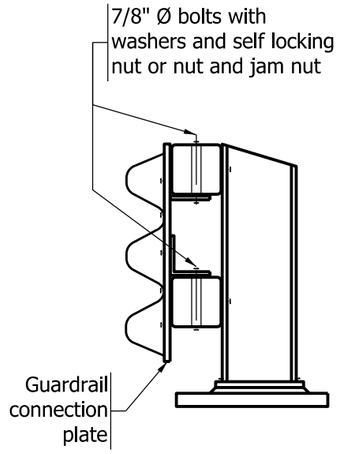

SECTION C-C

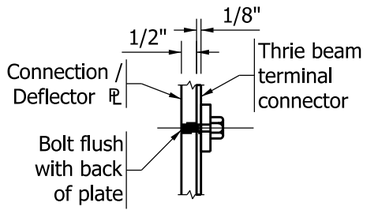

DETAIL A

NOTE:

1. See Standard Drawing E 706-BRTM-02 for railing tubing cap details.

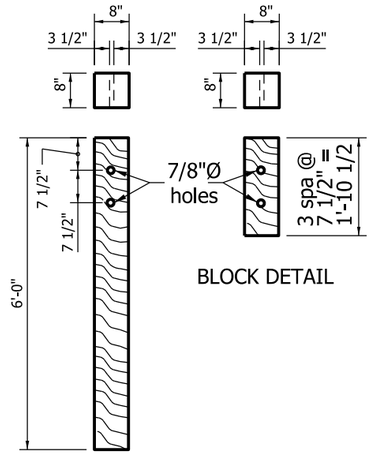

TIMBER POST DETAIL FOR THRIE-BEAM GUARDRAIL CONNECTION

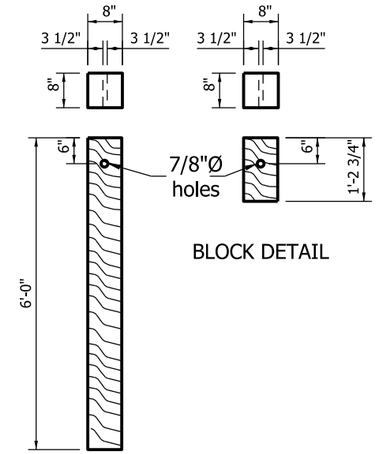

TIMBER POST DETAIL FOR W-BEAM GUARDRAIL CONNECTION

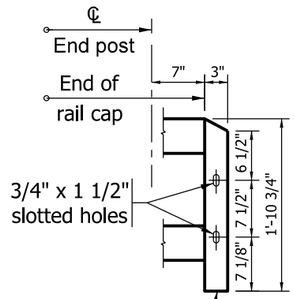

CONNECTION ANGLE A

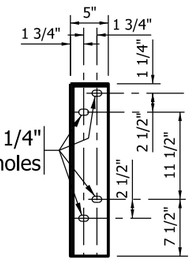

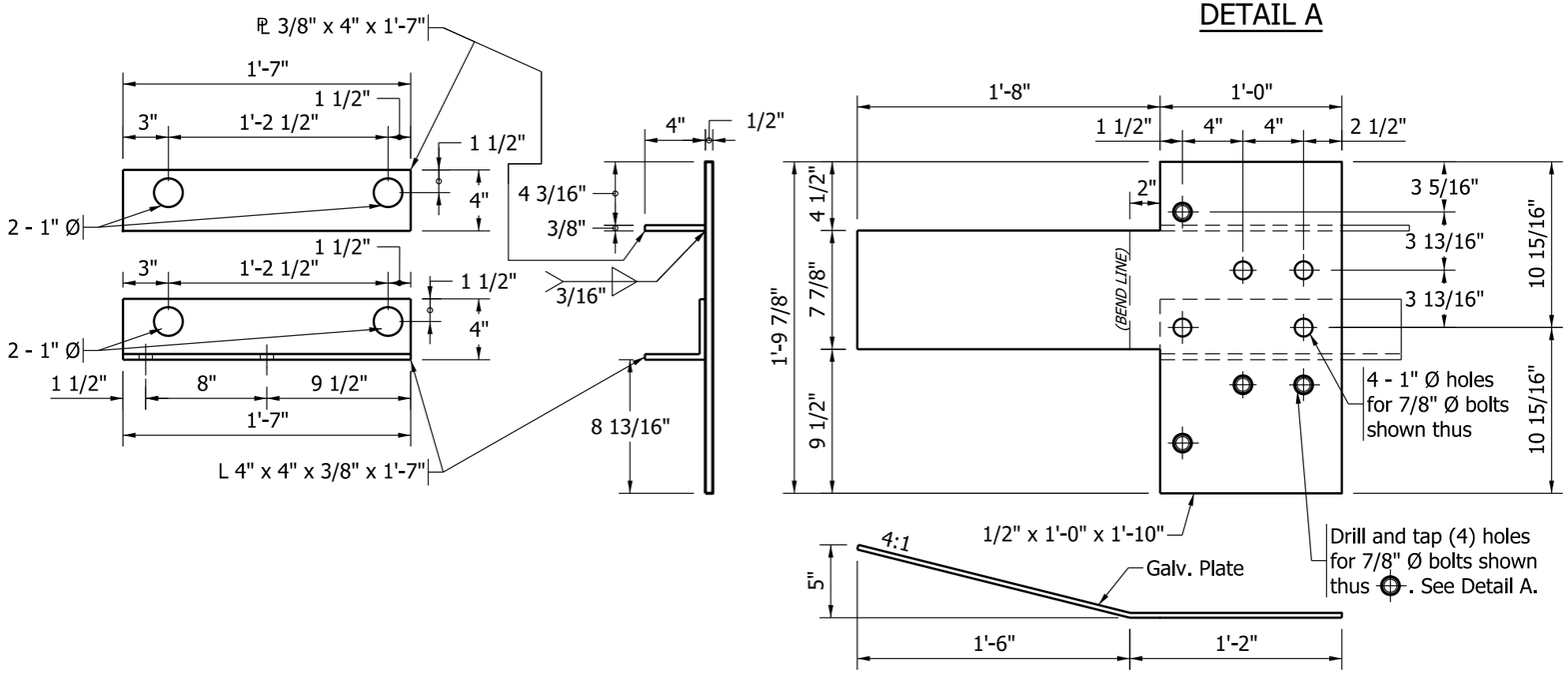

GUARDRAIL CONNECTION / DEFLECTOR PLATE DETAILS

INDIANA DEPARTMENT OF TRANSPORTATION

GUARDRAIL TRANSITION, TGT

SEPTEMBER 2011

STANDARD DRAWING NO. E 601-TTGT-02

RICHARD L. VanCLEAVE REGISTERED No. 9750 STATE OF INDIANA PROFESSIONAL ENGINEER

DESIGN STANDARDS ENGINEER

/s/ Richard L. VanCleave 09/01/11
DESIGN STANDARDS ENGINEER DATE

/s/ Mark A. Miller 09/01/11
CHIEF HIGHWAY ENGINEER DATE

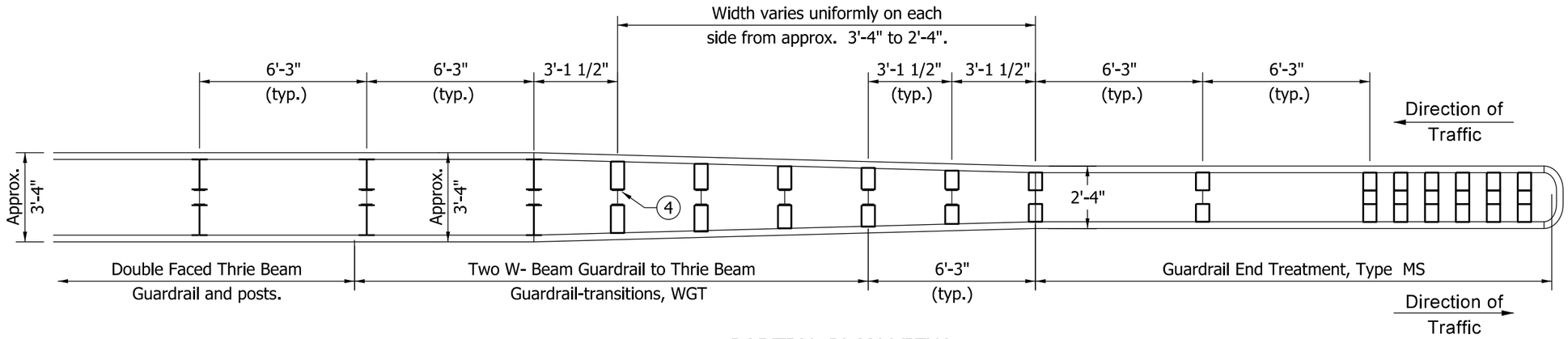

PARTIAL PLAN VIEW

Post	Blockouts
1	W-Beam
2	9" x 6"
3	10" x 6"
4	11" x 6"
5	12" x 6"
6	13" x 6"
7	W 14 x 22
8	W 14 x 22

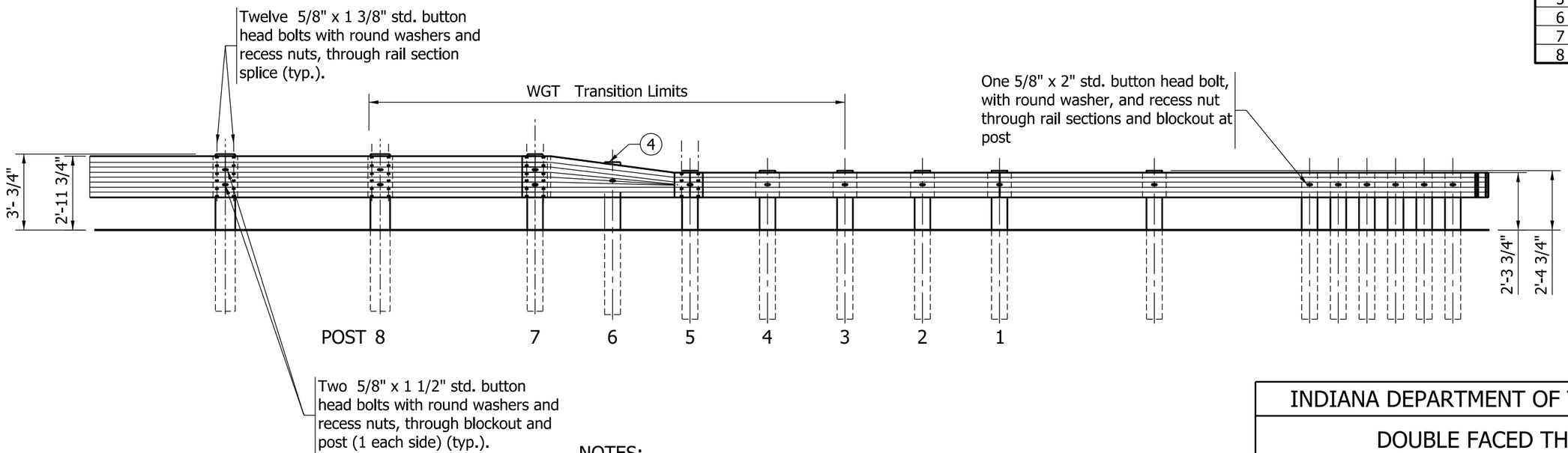

LEGEND:

- I - W 6 x 9 Post
- I - W 14 x 22 Blockout
- □ - Approved W-Beam Blockout

NOTES:

1. See Standard Drawing E 601-MTGR-01 for Thrie Beam Guardrail details.
2. See Standard Drawing E 601-TWGT-01 for Guardrail Transition WGT details.
3. See Standard Drawings E 601-WBGA-01 through -03 and E 601-WBGC-01 through -03 for W- Beam Guardrail details.

(4) At post 6 on the thrie beam guardrail transition to W-Beam guardrail, the maximum post exposure above the top of the transition rail shall be limited to 1".

INDIANA DEPARTMENT OF TRANSPORTATION

DOUBLE FACED THRIE BEAM GUARDRAIL TRANSITION TO GRET TYPE MS

SEPTEMBER 2011

STANDARD DRAWING NO. E 601-TTMS-01

RICHARD L. VanCLEAVE REGISTERED No. 9750 STATE OF INDIANA PROFESSIONAL ENGINEER

DESIGN STANDARDS ENGINEER

/s/ Richard L. VanCleave 09/01/11
DESIGN STANDARDS ENGINEER DATE

/s/ Mark A. Miller 09/01/11
CHIEF HIGHWAY ENGINEER DATE

NOTES:

1. If rub-rail is not spliced at post, the channel shall be cut and repositioned behind the flange.
2. If rub-rail is spliced at post, the splice material shall be removed and the channel shall be repositioned behind the flange.

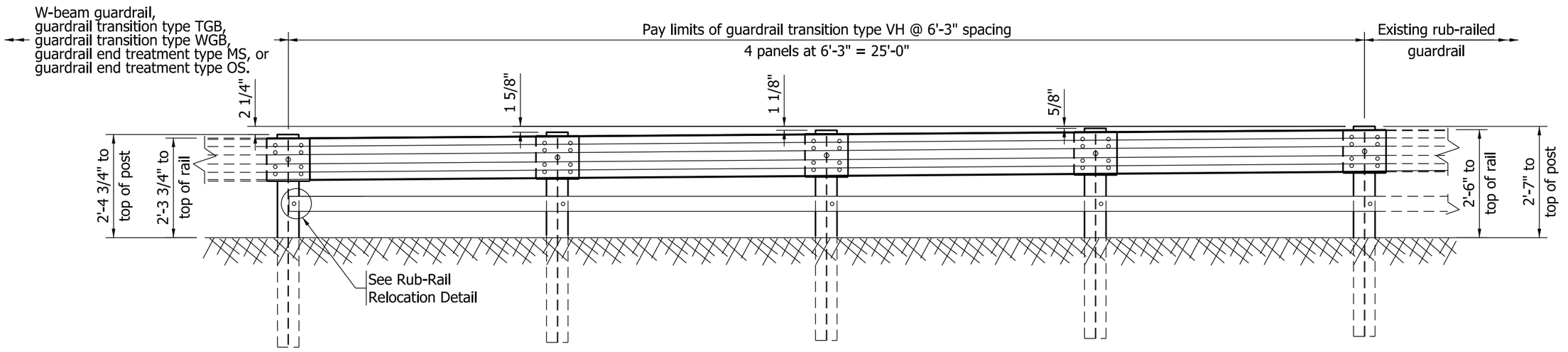

ELEVATION
GUARDRAIL TRANSITION TYPE VH AT 6'-3" POST SPACING

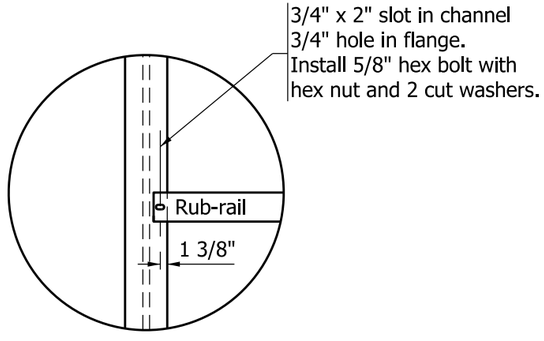

RUB-RAIL RELOCATION DETAIL

INDIANA DEPARTMENT OF TRANSPORTATION

GUARDRAIL TRANSITION
TYPE VH

SEPTEMBER 2011

STANDARD DRAWING NO. E 601-TTVH-01

RICHARD L. VanCLEAVE REGISTERED No. 9750 STATE OF INDIANA PROFESSIONAL ENGINEER

DESIGN STANDARDS ENGINEER

/s/ Richard L. VanCleave 09/01/11
DESIGN STANDARDS ENGINEER DATE

/s/ Mark A. Miller 09/01/11
CHIEF HIGHWAY ENGINEER DATE

NOTES:

1. If rub-rail is not spliced at post, the channel shall be cut and repositioned behind the flange.
2. If rub-rail is spliced at post, the splice material shall be removed and the channel shall be repositioned behind the flange.

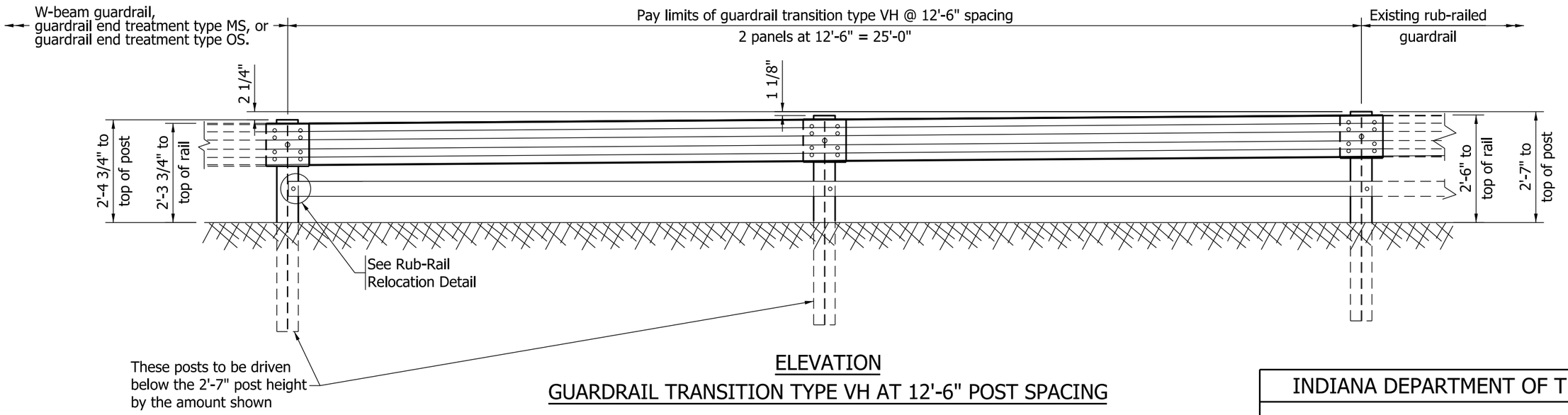

ELEVATION

GUARDRAIL TRANSITION TYPE VH AT 12'-6" POST SPACING

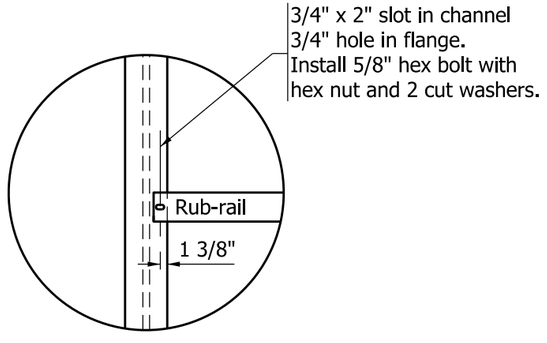

RUB-RAIL RELOCATION DETAIL

INDIANA DEPARTMENT OF TRANSPORTATION

GUARDRAIL TRANSITION
TYPE VH

SEPTEMBER 2011

STANDARD DRAWING NO. E 601-TTVH-02

RICHARD L. VanCLEAVE REGISTERED No. 9750 STATE OF INDIANA PROFESSIONAL ENGINEER

DESIGN STANDARDS ENGINEER

/s/ Richard L. VanCleave 09/01/11
DESIGN STANDARDS ENGINEER DATE

/s/ Mark A. Miller 09/01/11
CHIEF HIGHWAY ENGINEER DATE

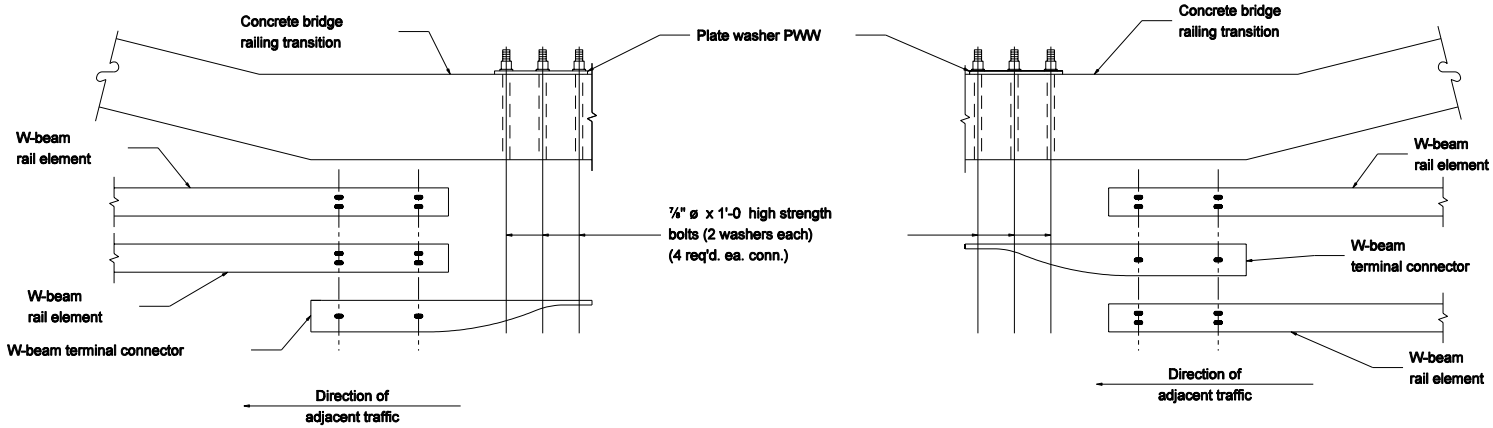

LAP DETAIL AT BRIDGE RAILING TRANSITION

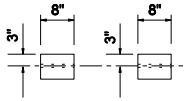

PLAN

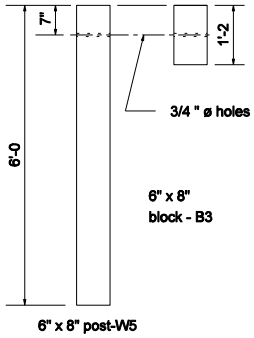

ELEVATION

POST & BLOCK DETAILS

GENERAL NOTES

1. This lap shall be used where guardrail transition type WGB is specified to connect to concrete bridge railing transition WBC.

INDIANA DEPARTMENT OF TRANSPORTATION

GUARDRAIL TRANSITION TYPE WGB

MARCH 2005

STANDARD DRAWING NO. E 601-TWGB-01

RICHARD L. VanCLEAVE REGISTERED No. 9750 STATE OF INDIANA PROFESSIONAL ENGINEER

DESIGN STANDARDS ENGINEER

/s/ Richard L. VanCleave 3-01-05
DESIGN STANDARDS ENGINEER DATE

/s/ Richard K. Smutzer 3-01-05
CHIEF HIGHWAY ENGINEER DATE

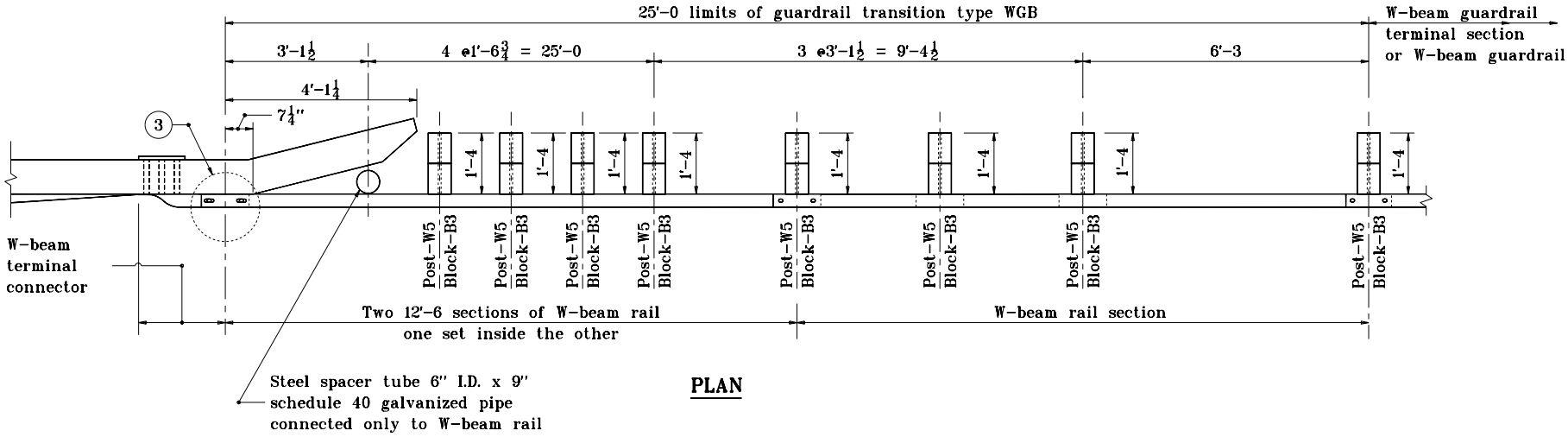

PLAN

NOTES:

1. This transition shall be used where guardrail transition type WGB is specified to connect W-beam guardrail to concrete bridge railing.
2. See Standard Drawing E 601-TWGB-03 for elevation and assembly details.
3. See Standard Drawings E 601-TWGB-01 for lap details.

INDIANA DEPARTMENT OF TRANSPORTATION

GUARDRAIL TRANSITION TYPE WGB

APRIL 1996

STANDARD DRAWING NO. **E 601-TWGB-02**

ANTHONY L. UREMOVICH REGISTERED No. 18095 STATE OF INDIANA PROFESSIONAL ENGINEER

DESIGN STANDARDS ENGINEER

DETAILS PLACED IN THIS FORMAT 7-27-99

/s/ Anthony L. Uremovich 7-27-99
DESIGN STANDARDS ENGINEER DATE

/s/ Firooz Zandi 7-27-99
CHIEF HIGHWAY ENGINEER DATE

ORIGINALLY APPROVED 4-01-96

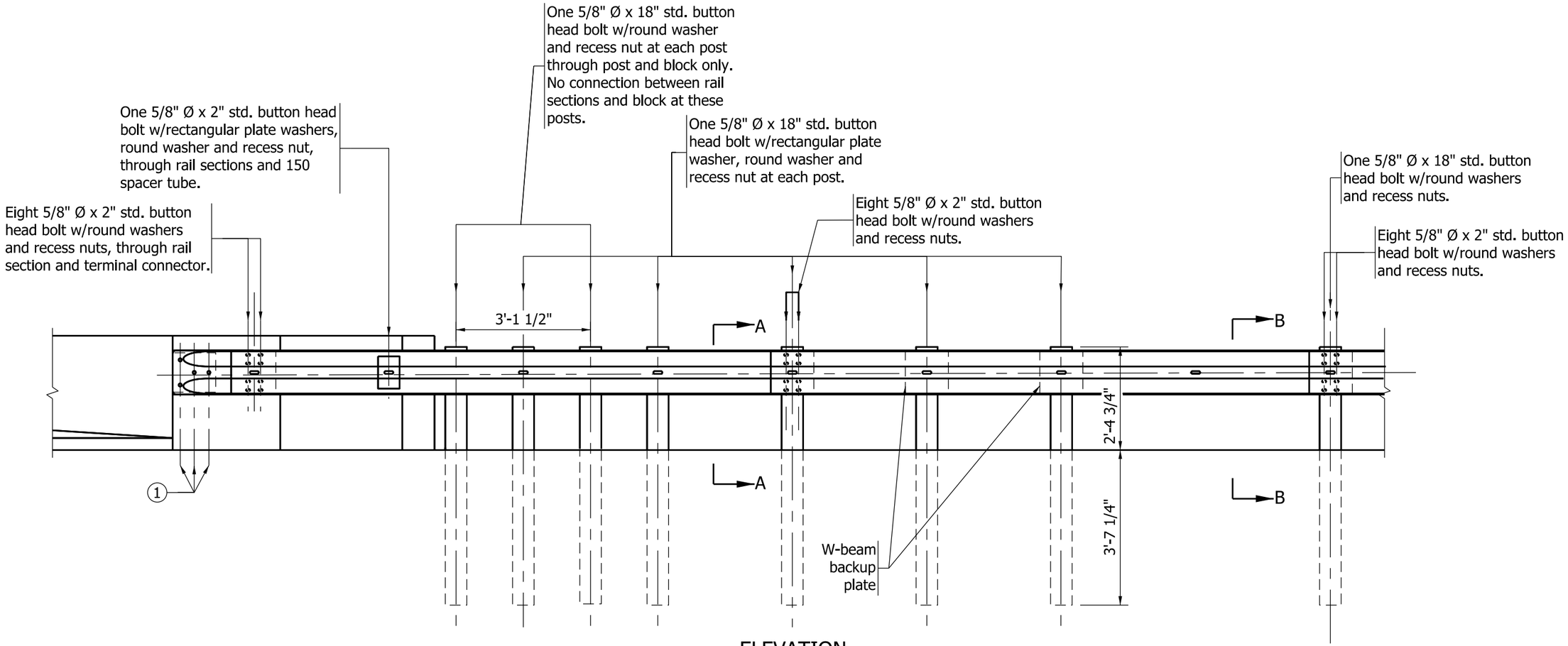

ELEVATION

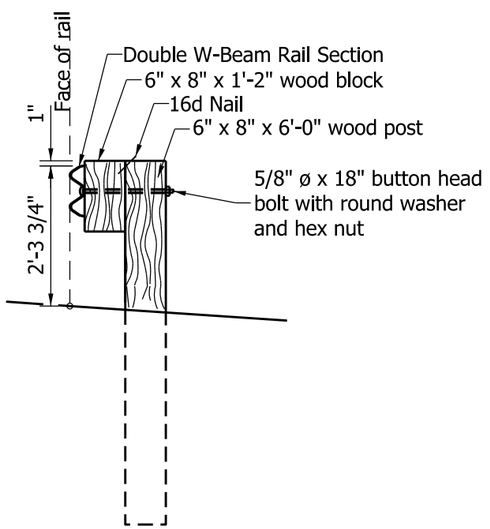

SECTION A-A

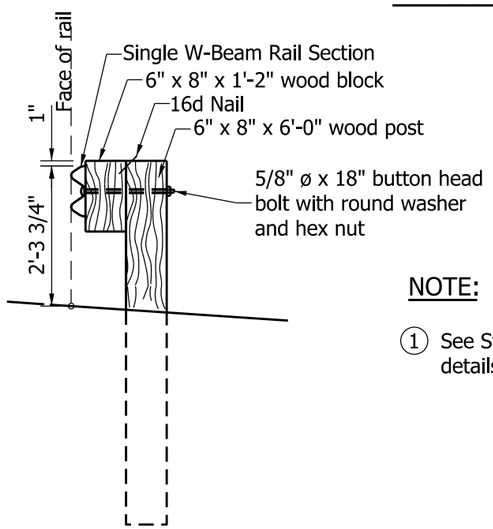

SECTION B-B

NOTE:

(1) See Standard Drawing E 601-TWGB-01 for lap details.

INDIANA DEPARTMENT OF TRANSPORTATION

GUARDRAIL TRANSITION
TYPE WGB

SEPTEMBER 2011

STANDARD DRAWING NO. E 601-TWGB-03

RICHARD L. VanCLEAVE REGISTERED No. 9750 STATE OF INDIANA PROFESSIONAL ENGINEER

DESIGN STANDARDS ENGINEER

/s/ Richard L. VanCleave 09/01/11
DESIGN STANDARDS ENGINEER DATE

/s/ Mark A. Miller 09/01/11
CHIEF HIGHWAY ENGINEER DATE

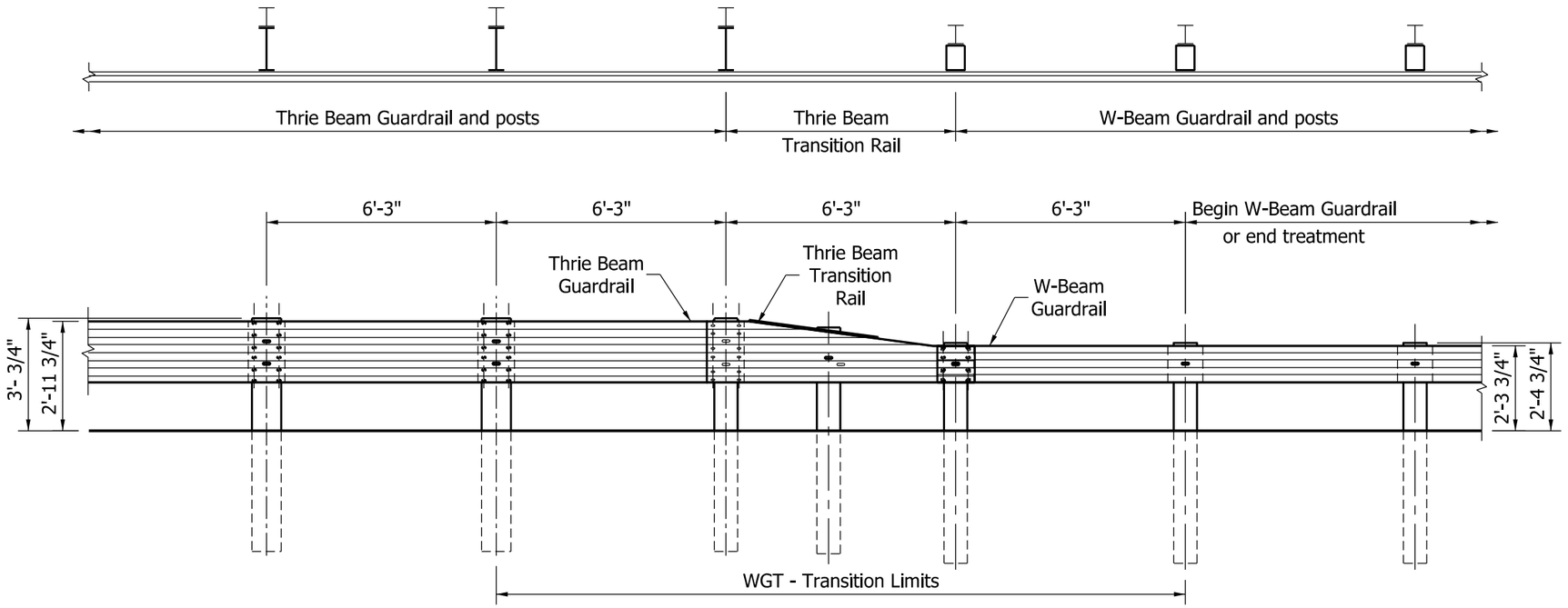

THRIE BEAM TO W-BEAM GUARDRAIL TRANSITION

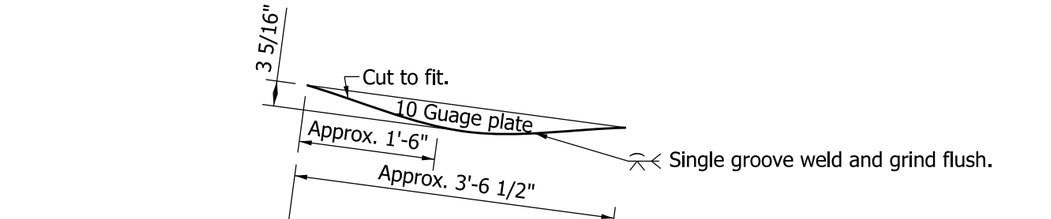

CAP PLATE PLAN VIEW

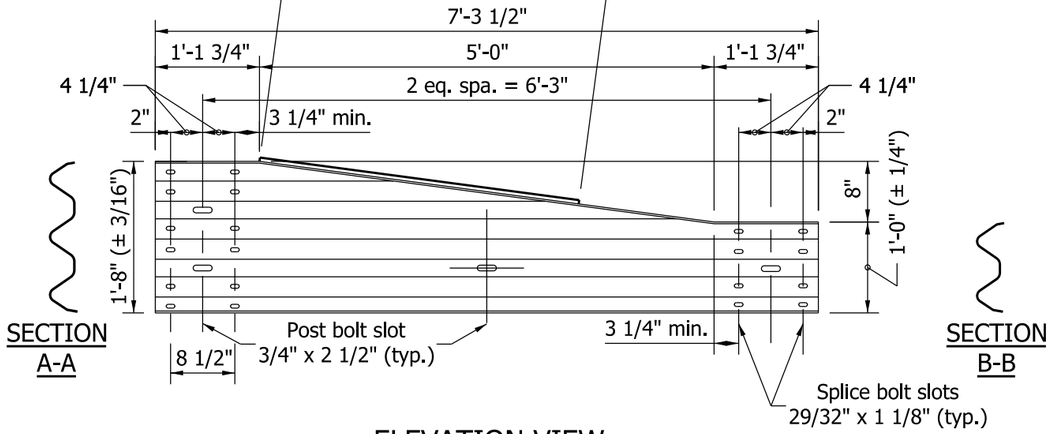

ELEVATION VIEW
THRIE BEAM TRANSITION RAIL

NOTES:

1. See Standard Drawing E 601-MTGR-01 for Thrie Beam Guardrail details.
2. See Standard Drawing E 601-WBGC-01 for W-Beam rail details.
3. See Standard Drawings E 601-WBGA-01 through -03 for W-Beam Guardrail assembly details.
4. Slope on Thrie Beam Transition shall be reversed where thrie beam to W-beam guardrail relative orientation is opposite to that shown hereon.

LEGEND:

- W 6 x 9 Post
- W 14 x 22 Blockout
- Approved W-Beam Blockout

INDIANA DEPARTMENT OF TRANSPORTATION

W-BEAM GUARDRAIL TO
THRIE BEAM GUARDRAIL
TRANSITION, WGT

SEPTEMBER 2011

STANDARD DRAWING NO. E 601-TWGT-01

RICHARD L. VanCLEAVE
REGISTERED
No. 9750
STATE OF INDIANA
PROFESSIONAL ENGINEER

DESIGN STANDARDS ENGINEER

/s/ Richard L. VanCleave 09/01/11
DESIGN STANDARDS ENGINEER DATE

/s/ Mark A. Miller 09/01/11
CHIEF HIGHWAY ENGINEER DATE

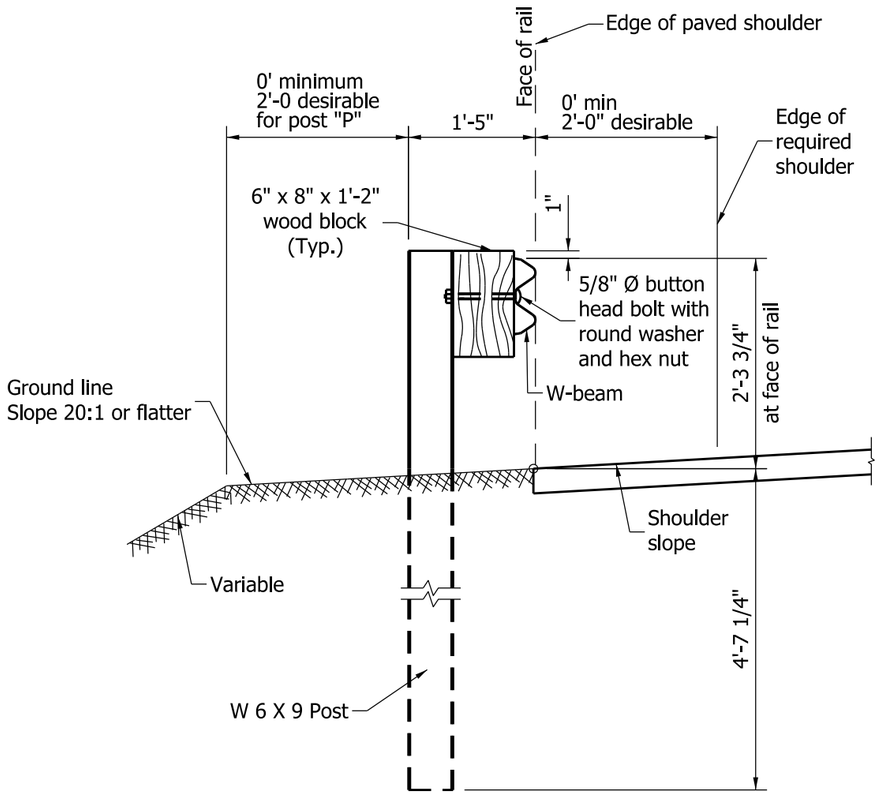

TYPICAL W-BEAM INSTALLATION

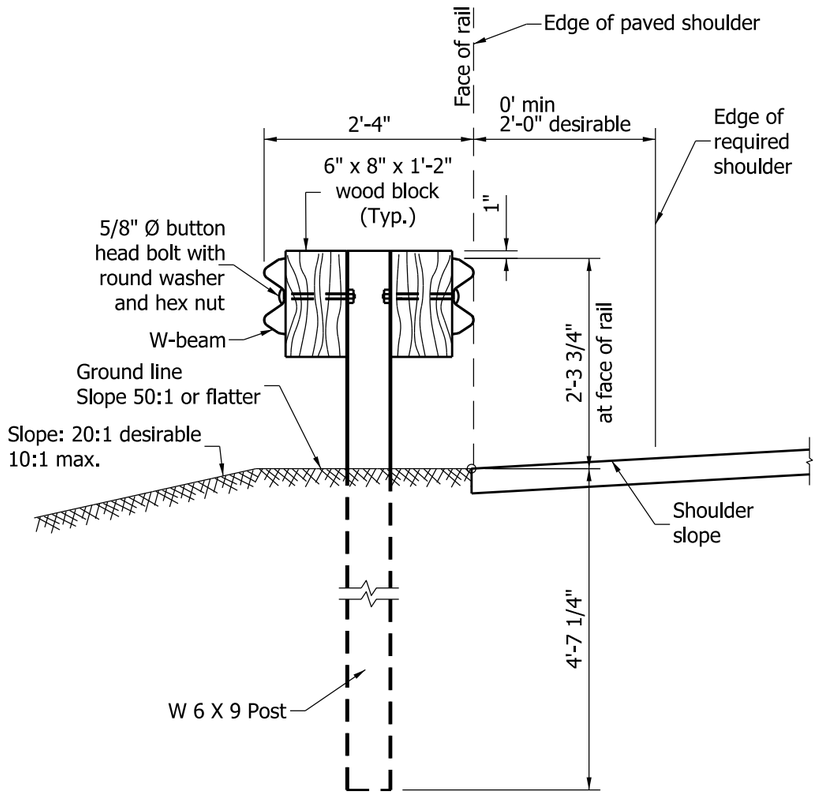

TYPICAL DOUBLE FACED W-BEAM INSTALLATION

INDIANA DEPARTMENT OF TRANSPORTATION

W-BEAM
GUARDRAIL ASSEMBLIES

SEPTEMBER 2011

STANDARD DRAWING NO. E 601-WBGA-01

RICHARD L. VanCLEAVE
REGISTERED
No. 9750
STATE OF INDIANA
PROFESSIONAL ENGINEER

DESIGN STANDARDS ENGINEER

/s/ Richard L. VanCleave *09/01/11*
DESIGN STANDARDS ENGINEER DATE

/s/ Mark A. Miller *09/01/11*
CHIEF HIGHWAY ENGINEER DATE

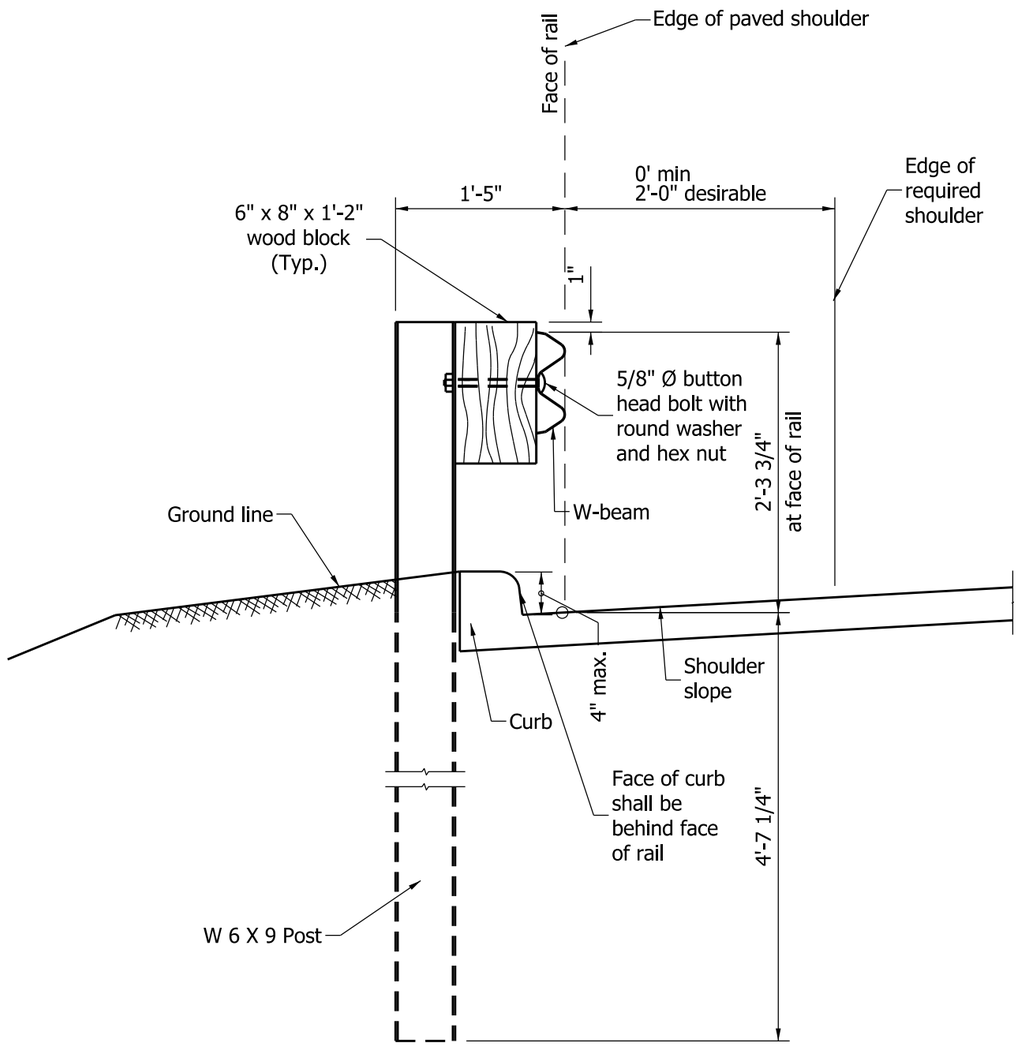

TYPICAL W-BEAM INSTALLATION AT CURB

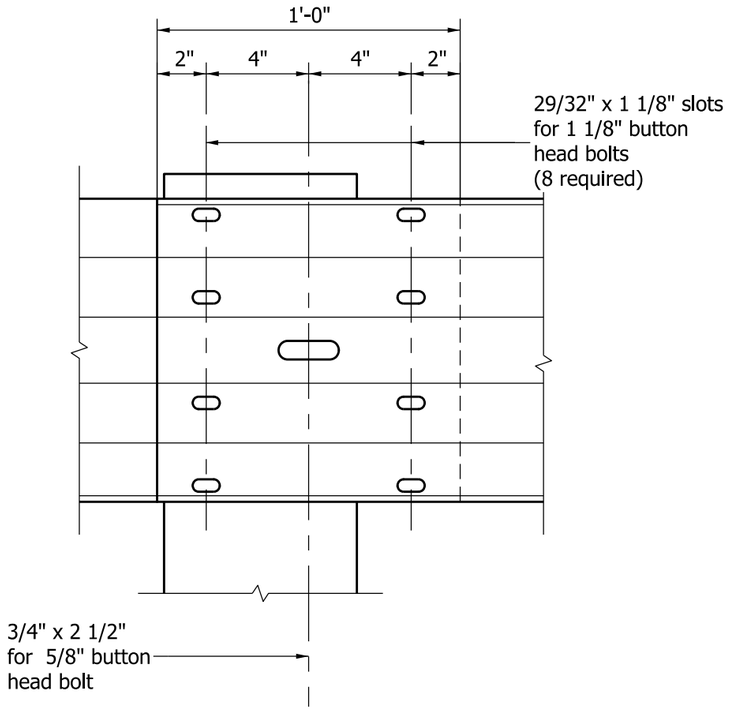

STEEL W-BEAM SPLICE DETAIL

INDIANA DEPARTMENT OF TRANSPORTATION

W-BEAM GUARDRAIL ASSEMBLIES

SEPTEMBER 2011

STANDARD DRAWING NO. E 601-WBGA-02

RICHARD L. VanCLEAVE
REGISTERED
No. 9750
STATE OF INDIANA
PROFESSIONAL ENGINEER

DESIGN STANDARDS ENGINEER

/s/ Richard L. VanCleave 09/01/11
DESIGN STANDARDS ENGINEER DATE

/s/ Mark A. Miller 09/01/11
CHIEF HIGHWAY ENGINEER DATE

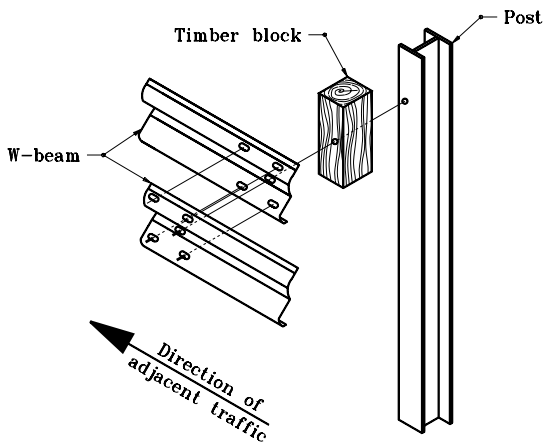

W-BEAM SPLICE CONNECTION
DETAIL AT POST

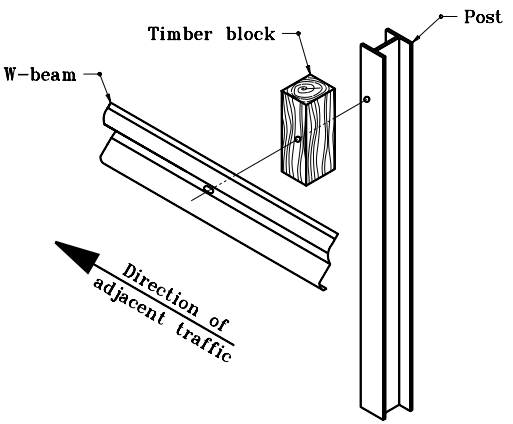

W-BEAM SPLICE CONNECTION DETAIL
AT POST FOR NON-SPLICE CONNECTIONS

INDIANA DEPARTMENT OF TRANSPORTATION

W-BEAM
GUARDRAIL ASSEMBLIES

SEPTEMBER 1998

STANDARD DRAWING NO. **E 601-WBGA-03**

ANTHONY L. UREMOVICH REGISTERED No. 18095 STATE OF INDIANA PROFESSIONAL ENGINEER

DESIGN STANDARDS ENGINEER

DETAILS PLACED IN THIS FORMAT	11-15-99
/s/ Anthony L. Uremovich DESIGN STANDARDS ENGINEER	11-15-99 DATE
/s/ Firooz Zandi CHIEF HIGHWAY ENGINEER	11-15-99 DATE
ORIGINALLY APPROVED	9-01-98

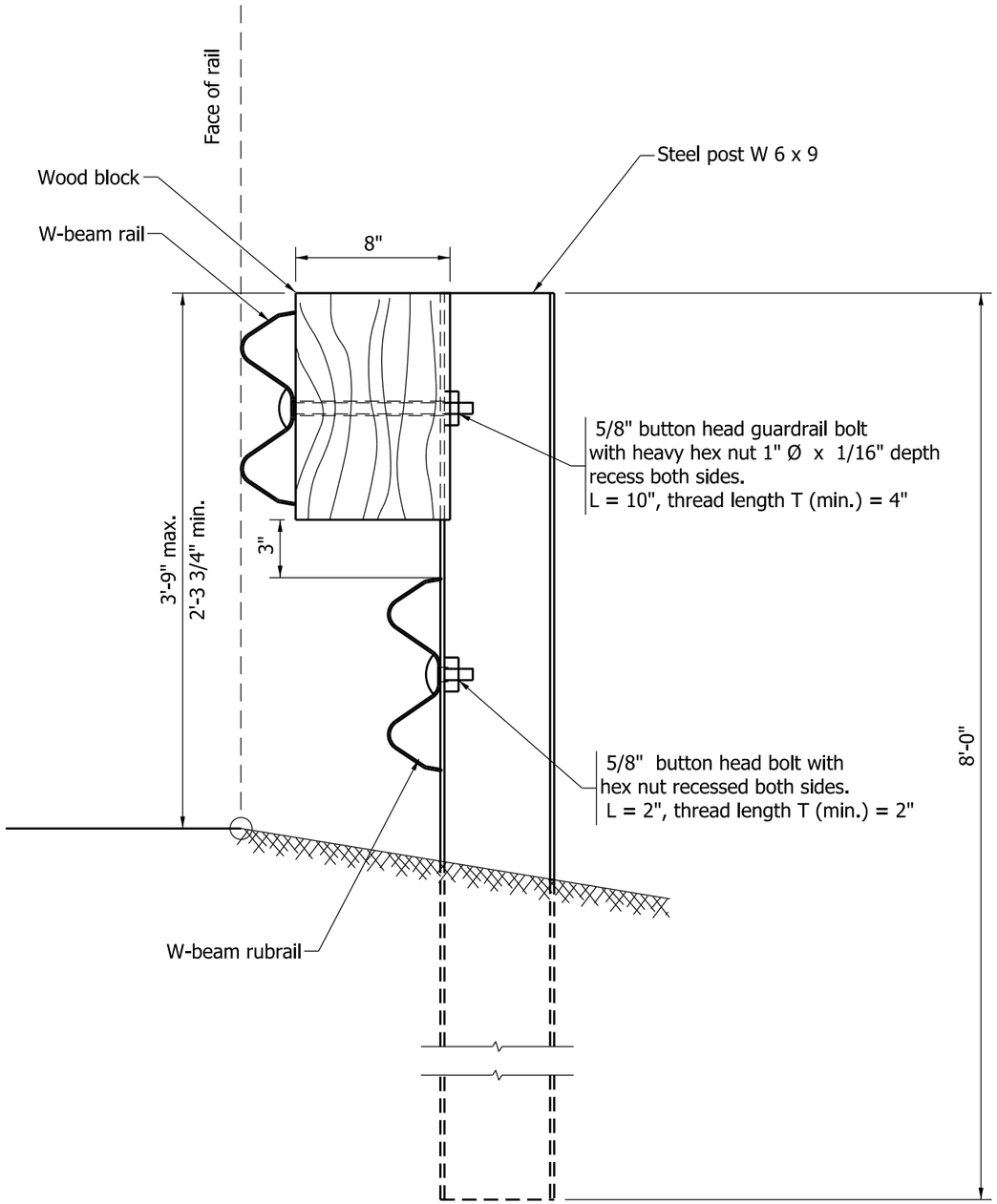

ELEVATION

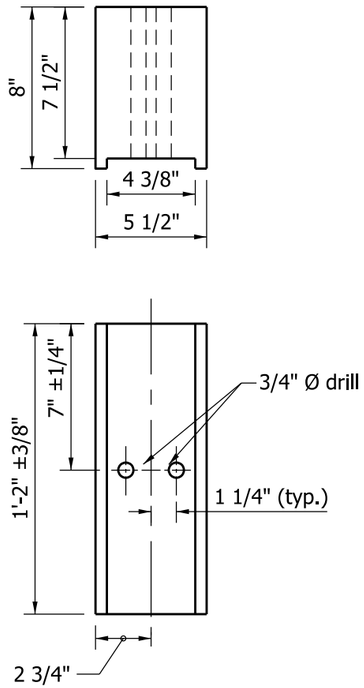

WOOD BLOCK

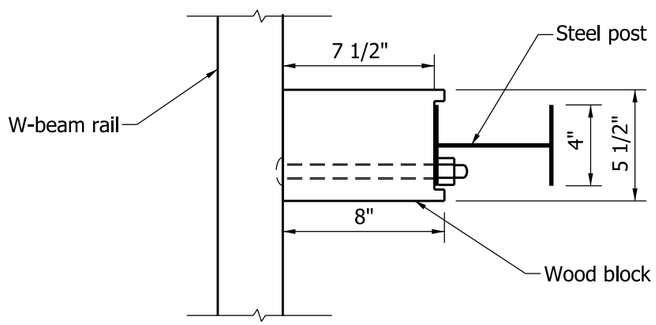

PLAN

STEEL POST AND WOOD BLOCK DETAIL
FOR WR-BEAM GUARDRAIL

NOTE:

1. All posts shall be 8'-0" lenght and spaced at 6'-3".

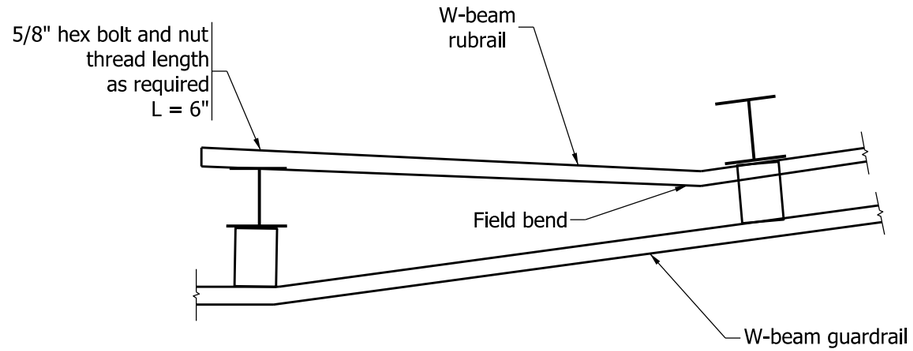

RUBRAIL TERMINATION DETAIL

INDIANA DEPARTMENT OF TRANSPORTATION

WR-BEAM GUARDRAIL

SEPTEMBER 2011

STANDARD DRAWING NO. E 601-WBGA-06

RICHARD L. VanCLEAVE
REGISTERED
No. 9750
STATE OF INDIANA
PROFESSIONAL ENGINEER

DESIGN STANDARDS ENGINEER

/s/ Richard L. VanCleave 09/01/11
DESIGN STANDARDS ENGINEER DATE

/s/ Mark A. Miller 09/01/11
CHIEF HIGHWAY ENGINEER DATE

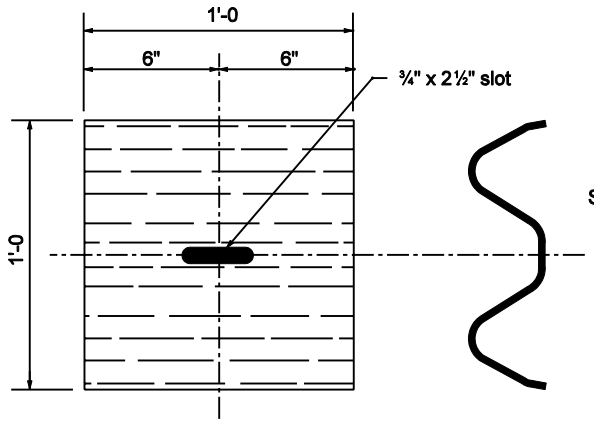

W-BEAM BACKUP PLATE

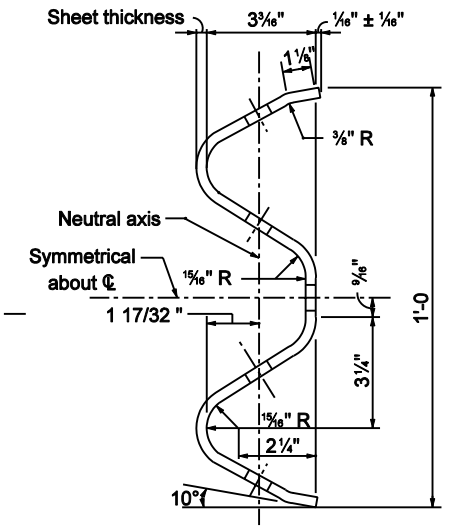

SECTION THROUGH BEAM ELEMENT

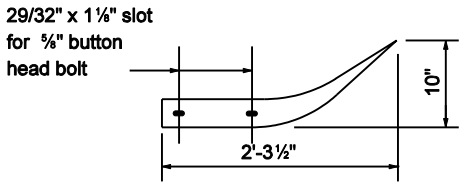

TOP VIEW

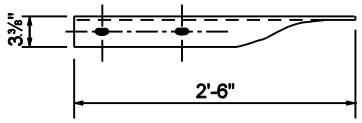

TOP VIEW

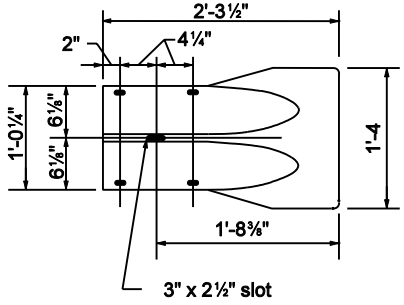

FRONT VIEW

CURVED TERMINAL END

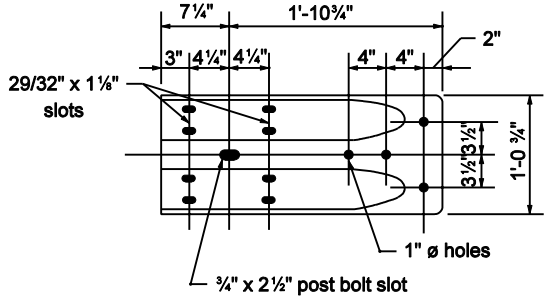

FRONT VIEW

W-BEAM TERMINAL CONNECTOR

GENERAL NOTES

1. This sheet shall be used when W-beam guardrail is specified. This sheet shall also be used when a W-beam guardrail system requires the use of standard W-beam guardrail components.
2. The details on ths sheet are for the standard components of W-beam guardrail.

INDIANA DEPARTMENT OF TRANSPORTATION

W-BEAM GUARDRAIL COMPONENTS

MARCH 2003

STANDARD DRAWING NO. E 601-WBGC-01

RICHARD L. VanCLEAVE REGISTERED No. 9750 STATE OF INDIANA PROFESSIONAL ENGINEER

DESIGN STANDARDS ENGINEER

/s/ Richard L. VanCleave 3-03-03
DESIGN STANDARDS ENGINEER DATE

/s/ Richard K. Smutzer 3-03-03
CHIEF HIGHWAY ENGINEER DATE

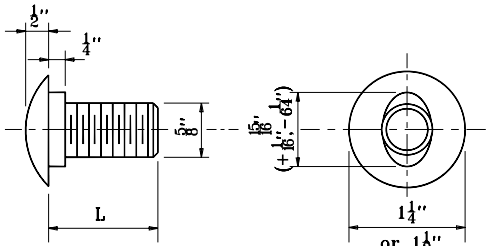

5/8" BUTTON HEAD BOLT

L	THREAD LENGTH
1 1/4"	Full Length Thread
2"	1 1/2" Min. Thread Length
8 1/2"	1 3/4" Min. Thread Length
1'-6	2 1/2" Min. Thread Length
2'-1	2" Min. Thread Length

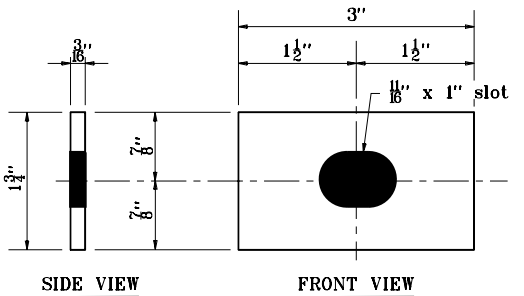

RECTANGULAR PLATE WASHER

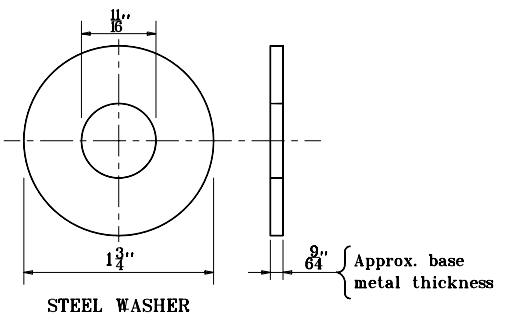

WASHER FOR 5/8" BOLT

INDIANA DEPARTMENT OF TRANSPORTATION

W-BEAM GUARDRAIL COMPONENTS

MAY 2000

STANDARD DRAWING NO. **E 601-WBGC-02**

ANTHONY L. UREMOVICH REGISTERED No. 18095 STATE OF INDIANA PROFESSIONAL ENGINEER

DESIGN STANDARDS ENGINEER

/s/ Anthony L. Uremovich 5-01-00
DESIGN STANDARDS ENGINEER — DATE

/s/ Firooz Zandi 5-01-00
CHIEF HIGHWAY ENGINEER — DATE

NOTES:

① These dimensions shall be adjusted as required to accommodate steel post flange.

2 Timber blocks shown in either Detail A or Detail B may be used.

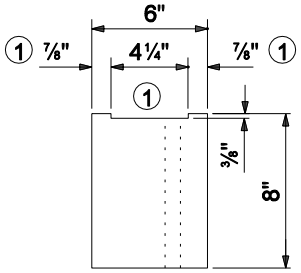

TOP VIEW

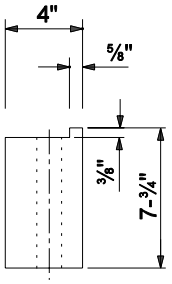

TOP VIEW

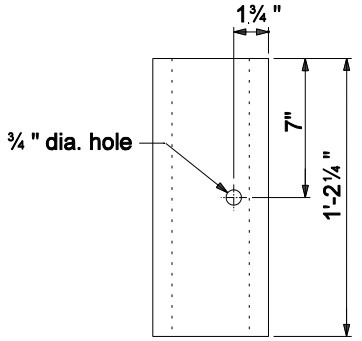

FRONT VIEW

TIMBER BLOCK DETAIL A

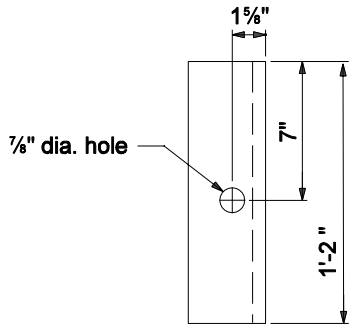

FRONT VIEW

TIMBER BLOCK DETAIL B

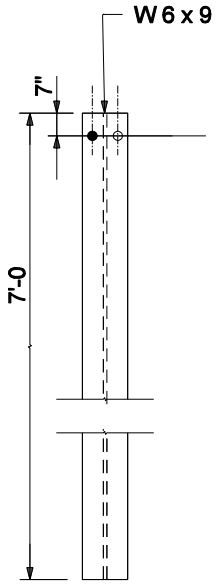

FRONT VIEW

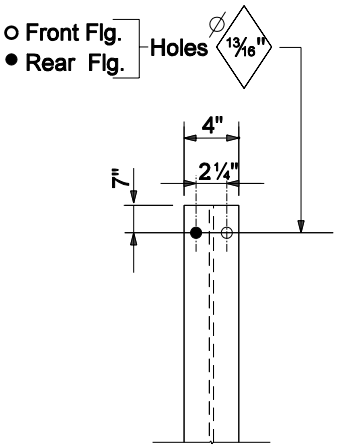

FRONT VIEW

HOLE PATTERN

STEEL POST DETAIL

INDIANA DEPARTMENT OF TRANSPORTATION

W - BEAM
GUARDRAIL COMPONENTS

SEPTEMBER 2004

STANDARD DRAWING NO. E 601-WBGC-03

RICHARD L. VanCLEAVE REGISTERED No. 9750 STATE OF INDIANA PROFESSIONAL ENGINEER

DESIGN STANDARDS ENGINEER

/s/ Richard L.VanCleave 3-01-04
DESIGN STANDARDS ENGINEER DATE

/s/ Richard K.Smutzer 3-01-04
CHIEF HIGHWAY ENGINEER DATE

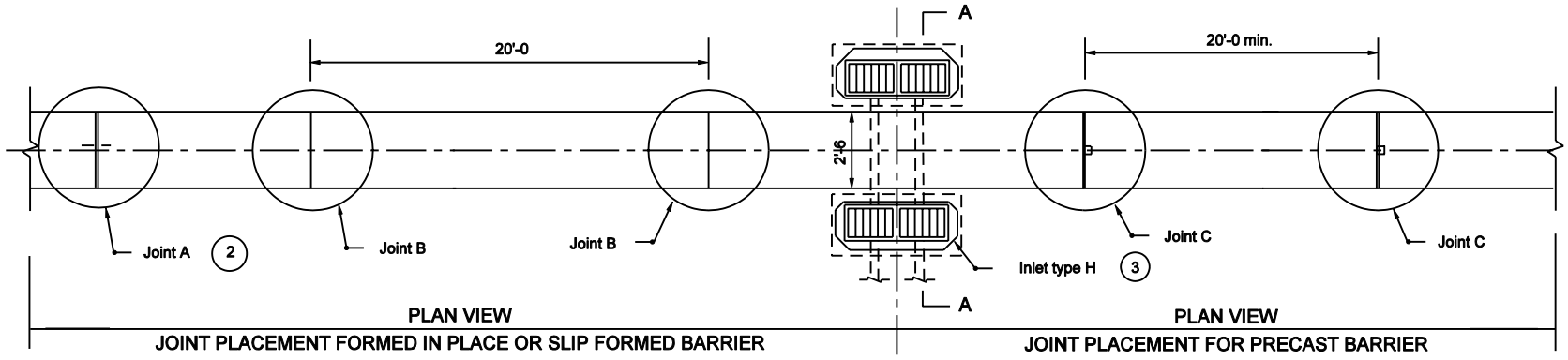

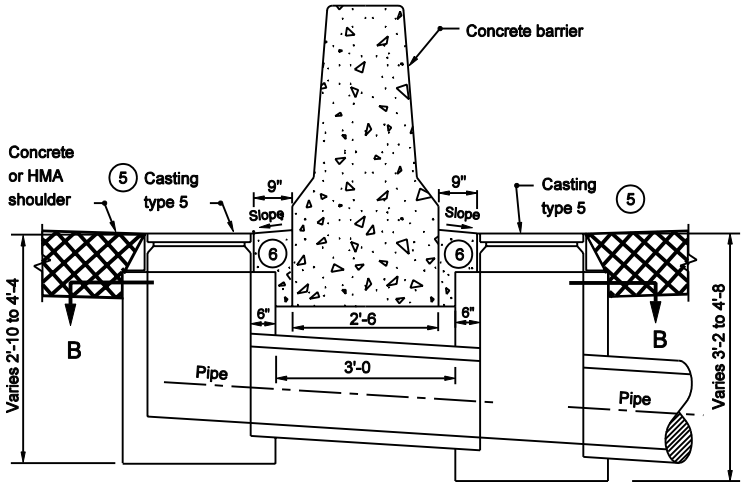

SECTION A-A

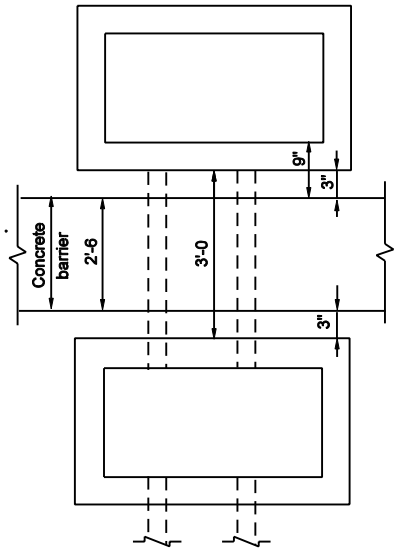

SECTION B-B

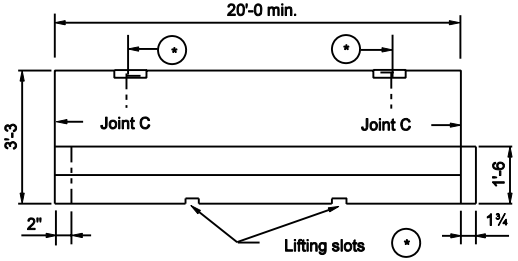

SIDE VIEW OF PRECAST SECTION

(*) Precast concrete barrier shall have threaded inserts cast into the top of each section, a minimum of ¼" below the surface, and embeded to a depth sufficient for safe lifting of the section.
Lifting slots will be permitted in addition to the inserts. The dimensions and locations of these slots may be adjusted to accomodate variations in handling equipment.

GENERAL NOTES :

1. See Standard Drawing E 602-CCMB-02 for joint details.
2. Cast-in-place or slip-formed concrete barrier shall have a joint type A at 10 ft from each end of a median bridge pier or bent. The maximum spacing between type A joints shall be 400 ft. Type A joint shall be placed at the end of each work period pour.
3. Each inlet type H includes two inlet boxes, the connector pipe between the inlet boxes, and two type 5 castings.
4. Type B joint shall be located and spaced as shown.
5. See Standard Drawings E 720-ICCA-01 to E 720-ICCA-03 for casting type 5 details.
6. Concrete shoulder or pavement between type 5 casting and concrete barrier wall.
7. See Standard Drawing E 720-INST-05B for information regarding inlet indicators.

INDIANA DEPARTMENT OF TRANSPORTATION

CONCRETE BARRIER DRAIN AND JOINT PLACEMENT

MARCH 2003

STANDARD DRAWING NO. E 602-CCMB-01

RICHARD L. VanCLEAVE REGISTERED NO. 9750 STATE OF INDIANA PROFESSIONAL ENGINEER

DESIGN STANDARDS ENGINEER

/s/ Richard L. VanCleave 3-03-03
DESIGN STANDARDS ENGINEER DATE

/s/ Richard K. Smutzer 3-03-03
CHIEF HIGHWAY ENGINEER DATE

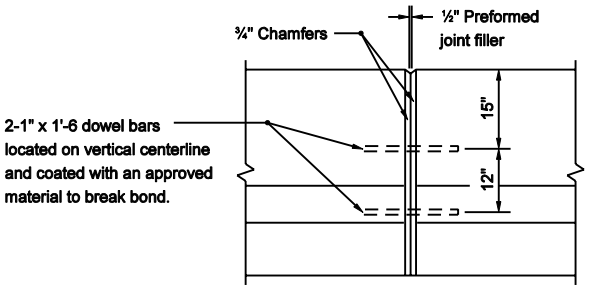

JOINT A

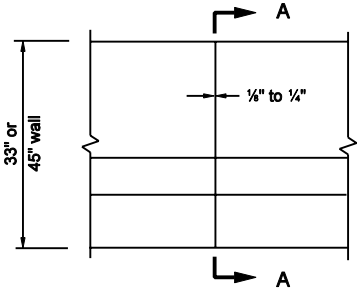

JOINT B

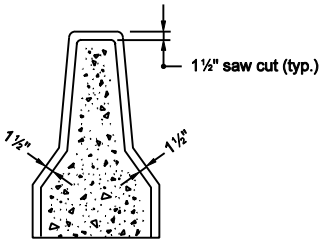

SECTION A-A

FORMED IN PLACE OR SLIP FORMED JOINTS

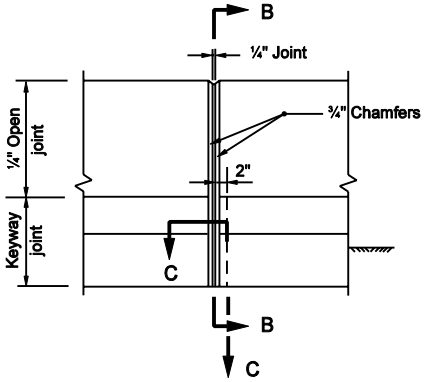

JOINT C

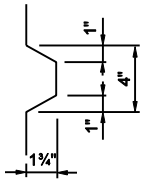

SECTION C-C

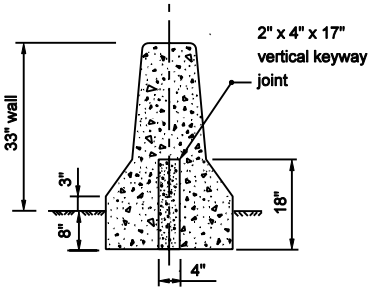

SECTION B-B

NOTES :

1. See Standard Drawing E 602-CCMB-01 for joint placement.

PRECAST JOINT

INDIANA DEPARTMENT OF TRANSPORTATION

CONCRETE BARRIER JOINT

MARCH 2003

STANDARD DRAWING NO. E 602-CCMB-02

RICHARD L. VANCLEAVE REGISTERED No. 9750 STATE OF INDIANA PROFESSIONAL ENGINEER

DESIGN STANDARDS ENGINEER

/s/ Richard L. VanCleave 3-03-03
DESIGN STANDARDS ENGINEER DATE

/s/ Richard K. Smutzer 3-03-03
CHIEF HIGHWAY ENGINEER DATE

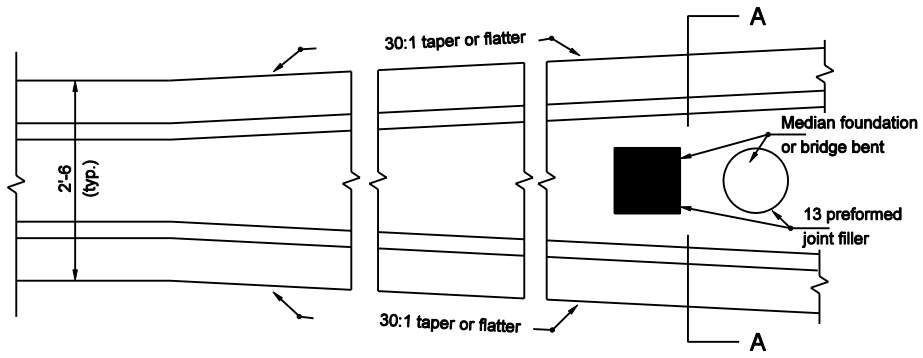

PLAN VIEW AT
INTEGRAL MEDIAN FOUNDATION OR BRIDGE BENT

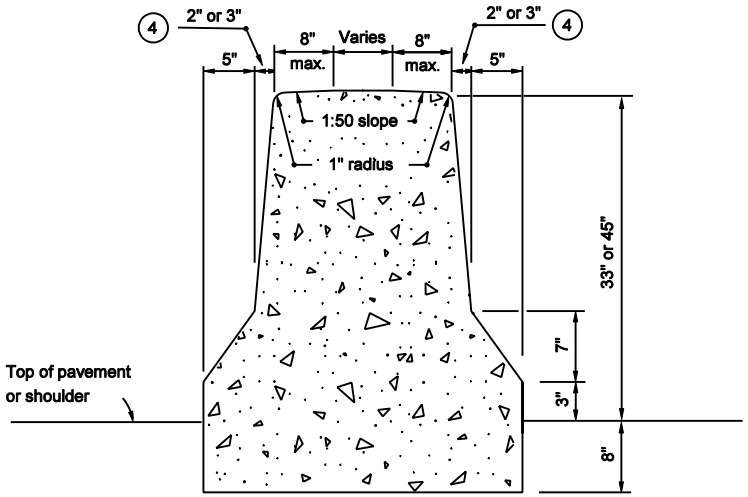

SECTION A-A

NOTES :

1. All integral median foundations shall be constructed as shown.
2. At a bridge pier, the faces of the concrete barrier shall be transitioned at a 30:1 taper to match configuration of the pier stem. At a median bridge bent, the faces of the concrete barrier shall be transitioned at a 30:1 taper to match the configuration of the crash wall. If the height of the crash wall is less than the height of the concrete barrier, the height of the crash wall shall be increased, as detailed elsewhere on the plans, to match the height of the concrete barrier.
3. An appropriate type of impact attenuator shall be designated for the ends of the concrete barrier, when it is exposed to traffic within the roadway clear zone.

(4) Use 2" for 33" height concrete barrier wall and 3" for 45" height concrete barrier wall.

INDIANA DEPARTMENT OF TRANSPORTATION

CONCRETE BARRIER DETAILS

MARCH 2003

STANDARD DRAWING NO. E 602-CCMB-03

RICHARD L. VanCLEAVE REGISTERED No. 9750 STATE OF INDIANA PROFESSIONAL ENGINEER

DESIGN STANDARDS ENGINEER

/s/ Richard L. VanCleave 3-03-03
DESIGN STANDARDS ENGINEER DATE

/s/ Richard K. Smutzer 3-03-03
CHIEF HIGHWAY ENGINEER DATE

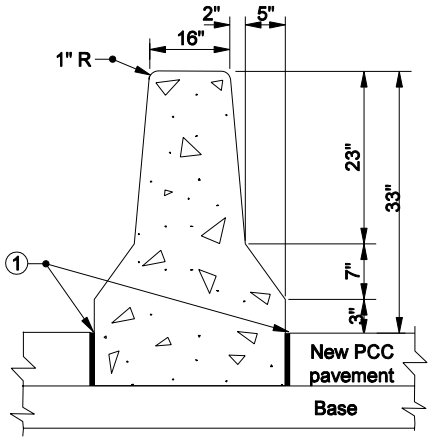

NEW PCC PAVEMENT

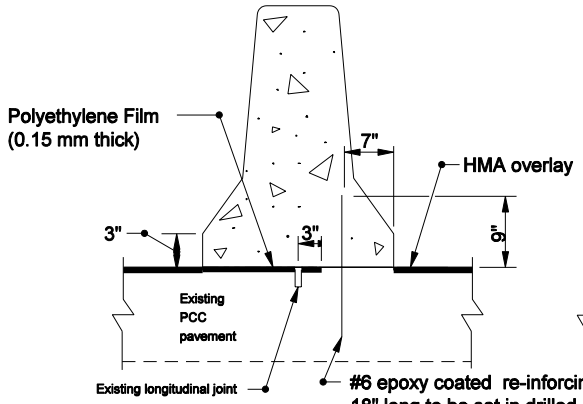

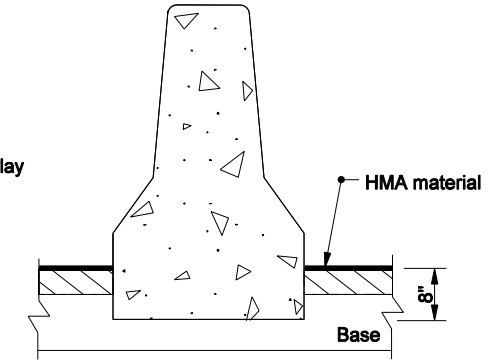

NEW HMA PAVEMENT

NEW HMA OVERLAY OVER EXISTING PCC PAVEMENT

33" HEIGHT CONCRETE BARRIER WALL

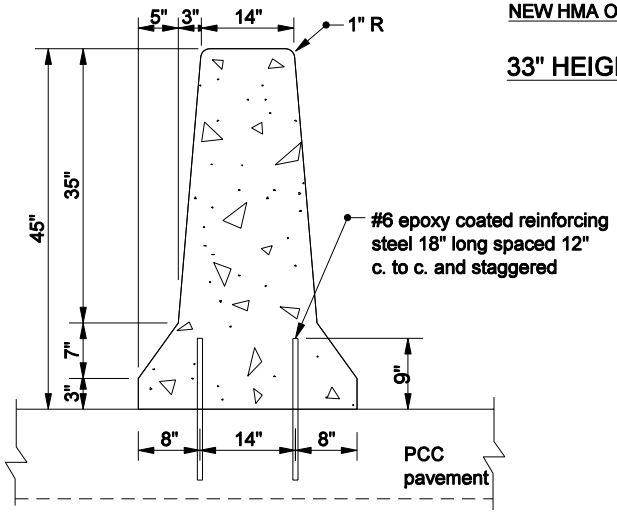

CONCRETE BARRIER WITH PCC PAVEMENT

45" HEIGHT CONCRETE BARRIER WALL

NOTES:

① $\frac{1}{2}$" Preformed Joint Filler.

INDIANA DEPARTMENT OF TRANSPORTATION

CONCRETE BARRIER DETAILS

SEPTEMBER 2006

STANDARD DRAWING NO. E 602-CCMB-04

RICHARD L. VanCLEAVE REGISTERED No. 9750 STATE OF INDIANA PROFESSIONAL ENGINEER

DESIGN STANDARDS ENGINEER

/s/ Richard L. VanCleave 9-01-06
DESIGN STANDARDS ENGINEER DATE

/s/ Richard K. Smutzer 9-01-06
CHIEF HIGHWAY ENGINEER DATE

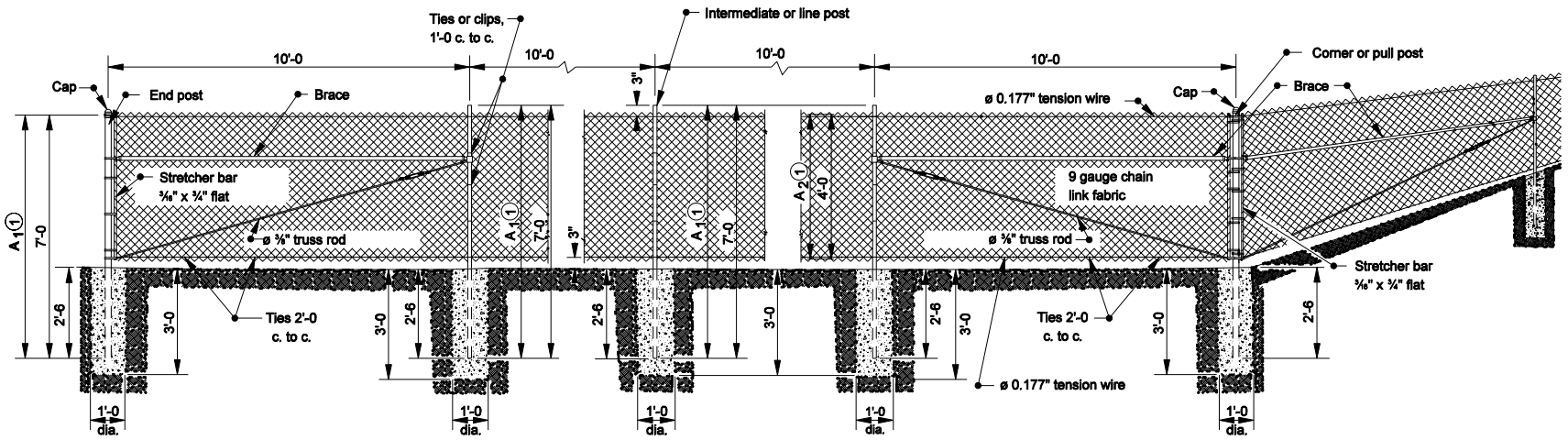

RIGHT OF WAY FENCE

Steel Chain Link Fence

GENERAL NOTES

(1) For each additional 1'-0 in height increase dimensions A_1 and A_2 by 1'-0.

2. Dimensions as shown are for 4'-0 fence.

3. For chain link type stream crossing or depression detail see Standard Drawing E 603-CLTF-02 for dimensions and installation.

TUBULAR POST CHART								
	GROUP 1				GROUP 2			
HEIGHT OF FENCE	< 6'		≥ 6'		< 6'		≥ 6'	
	NOM. DIA.	WEIGHT	NOM. DIA.	WEIGHT	NOM. DIA.	WEIGHT	NOM. DIA.	WEIGHT
	inches	lb/ft	inches	lb/ft	inches	lb/ft	inches	lb/ft
END, CORNER, AND PULL POSTS	2	3.65	2½"	5.79	2	3.12	2½"	4.64
LINE POSTS	1¼"	2.27	2	3.65	1¼"	1.84	2	3.12
BRACE	1¼"	2.27	1¼"	2.27	1¼"	1.84	1¼"	1.84

INDIANA DEPARTMENT OF TRANSPORTATION

CHAIN LINK TYPE FENCE

MARCH 2006

STANDARD DRAWING NO. E 603-CLTF-01

RICHARD L. VANCLEAVE REGISTERED No. 9750 STATE OF INDIANA PROFESSIONAL ENGINEER

DESIGN STANDARDS ENGINEER

/s/ Richard L. VanCleave 3-01-06
DESIGN STANDARDS ENGINEER DATE

/s/ Richard K. Smutzer 3-01-06
CHIEF HIGHWAY ENGINEER DATE

GENERAL NOTES

1. This installation to be made only where directed. Barbed wire will not be required at points where such installation would cause the collecting of drift in the channel.
2. Line posts of 9'-6 or longer for crossing shall be 2" nominal tubing or 3 x 3 x 1/4 angles and shall be set in concrete footings.
3. Extra length posts to be used as directed.

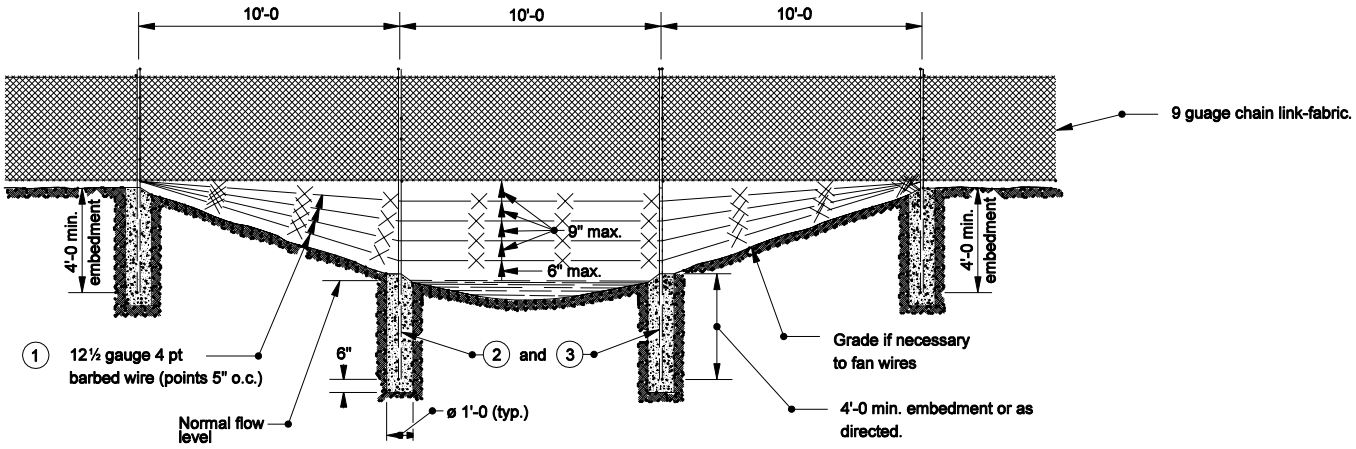

SECTION AT STREAM CROSSING OR DEPRESSION

INDIANA DEPARTMENT OF TRANSPORTATION

CHAIN LINK TYPE FENCE

SEPTEMBER 2004

STANDARD DRAWING NO. E 603-CLTF-02

RICHARD L. VanCLEAVE REGISTERED No. 9750 STATE OF INDIANA PROFESSIONAL ENGINEER

DESIGN STANDARDS ENGINEER

/s/ Richard L. VanCleave 9-01-04
DESIGN STANDARDS ENGINEER DATE

/s/ Richard K. Smutzer 9-01-04
CHIEF HIGHWAY ENGINEER DATE

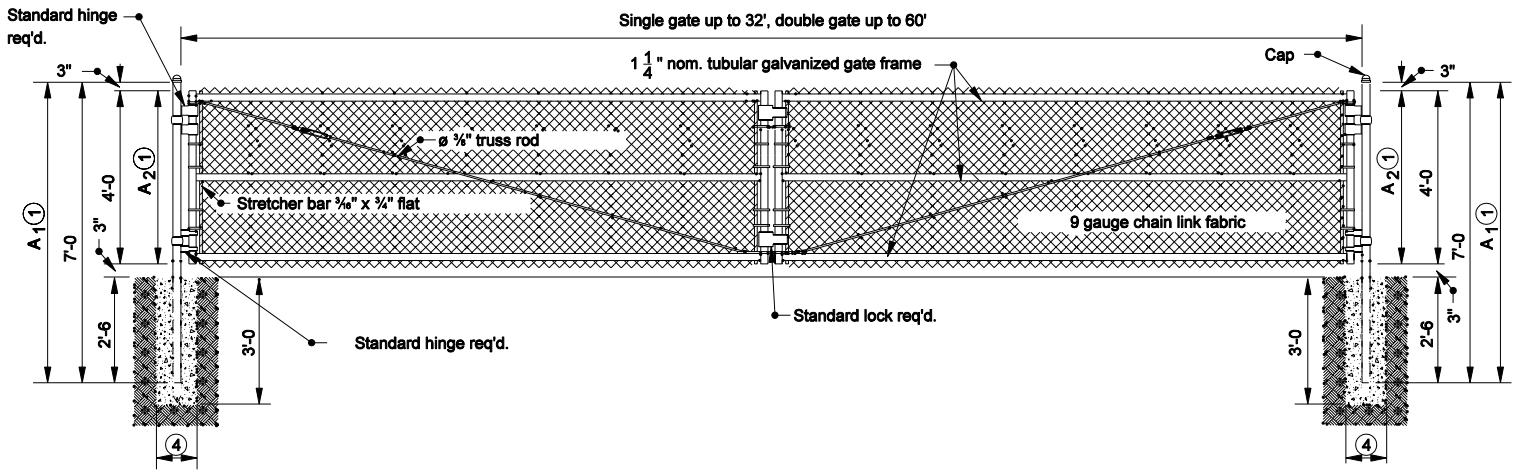

CHAIN LINK GATE

GENERAL NOTES

(1) For each additional 1'-0 in height increase dimension A_1 and A_2 by 1'-0.

2. See Standard Drawing E 603-CLTF-01 for the tubular post chart.

3. Dimensions as shown are for 4'-0 fence.

(4) Diameter equals 10" plus the outside diameter of the post.

INDIANA DEPARTMENT OF TRANSPORTATION

CHAIN LINK TYPE GATE

SEPTEMBER 2004

STANDARD DRAWING NO. E 603-CLTF-03

RICHARD L. VanCLEAVE REGISTERED No. 9750 STATE OF INDIANA PROFESSIONAL ENGINEER

DESIGN STANDARDS ENGINEER

/s/ Richard L.VanCleave 9-01-04
DESIGN STANDARDS ENGINEER DATE

/s/ Richard K.Smutzer 9-01-04
CHIEF HIGHWAY ENGINEER DATE

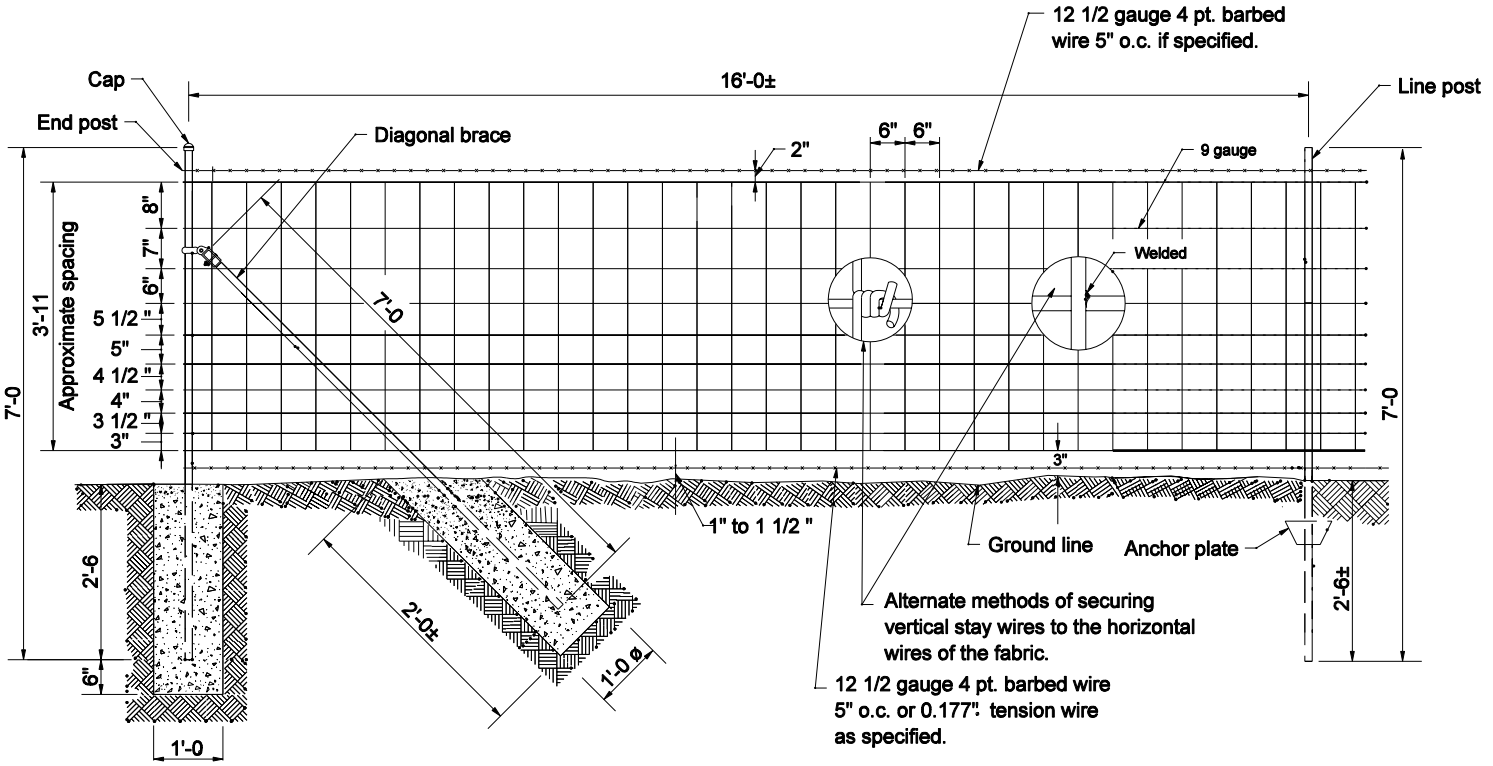

FARM FIELD TYPE FENCE

POST CHART						
4'-0 HEIGHT			GROUP 1		GROUP 2	
		WEIGHT	NOM. DIA.	WEIGHT	NOM. DIA.	WEIGHT
		lb/ft	in.	lb/ft	in.	lb/ft
END, CORNER, AND PULL POSTS			2	3.65	2	3.12
LINE POSTS	STUDDED "T"	1.33				
	"U"	1.33				
DIAGONAL BRACE			1 1/4	2.27	1 1/4	1.84

INDIANA DEPARTMENT OF TRANSPORTATION

FARM FIELD TYPE FENCE

SEPTEMBER 2004

STANDARD DRAWING NO. E 603-FFTF-01

RICHARD L. VanCLEAVE REGISTERED No. 9750 STATE OF INDIANA PROFESSIONAL ENGINEER

DESIGN STANDARDS ENGINEER

/s/ Richard L. VanCleave 9-01-04
DESIGN STANDARDS ENGINEER DATE

/s/ Richard K. Smutzer 9-01-04
CHIEF HIGHWAY ENGINEER DATE

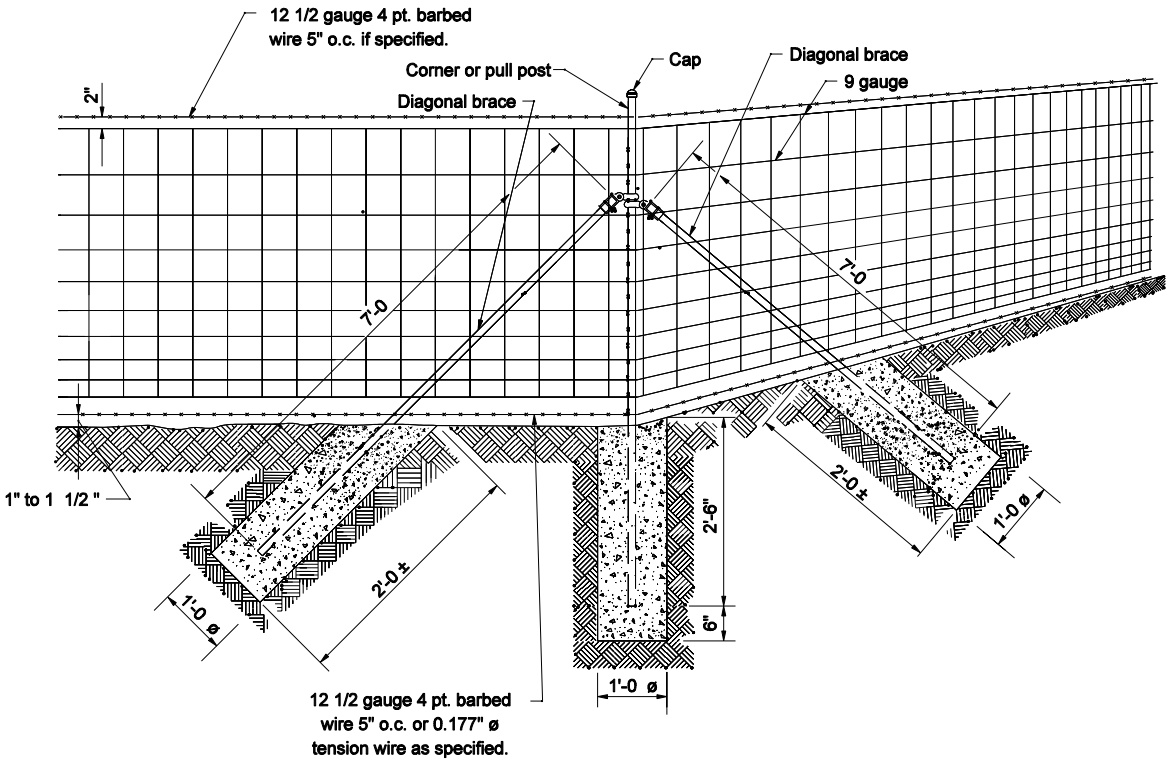

FARM FIELD TYPE FENCE CORNER

GENERAL NOTES

1. See Standard Drawing E 603-FFTF-01 for Post Chart.

INDIANA DEPARTMENT OF TRANSPORTATION

FARM FIELD TYPE FENCE

SEPTEMBER 2004

STANDARD DRAWING NO. E 603-FFTF-02

RICHARD L. VanCLEAVE REGISTERED No. 9750 STATE OF INDIANA PROFESSIONAL ENGINEER

DESIGN STANDARDS ENGINEER

/s/ Richard L. VanCleave 9-01-04
DESIGN STANDARDS ENGINEER DATE

/s/ Richard K. Smutzer 9-01-04
CHIEF HIGHWAY ENGINEER DATE

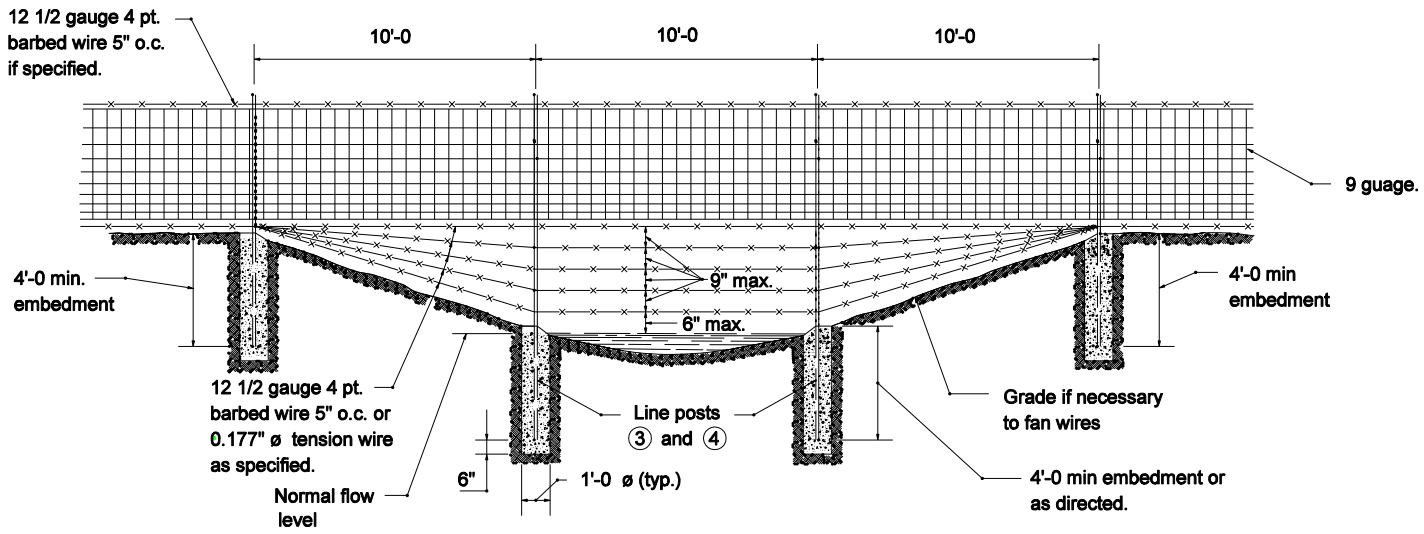

SECTION AT STREAM CROSSING OR DEPRESSION

GENERAL NOTES

1. For farm field type gate see Standard Drawing E 603-CLTF-03 for dimensions and installation. Substitute farm field type fence for chain link type fence.
2. The placement of fence over a stream crossing or depression shall be as directed.

③ Extra length posts shall be used as directed.

④ Line posts 9'-6 or longer for crossing shall be 2" nom. dia. ø tubing or L 3 x 3 x $\frac{1}{4}$ " angles and shall be set in concrete footings.

INDIANA DEPARTMENT OF TRANSPORTATION

FARM FIELD TYPE FENCE

SEPTEMBER 2004

STANDARD DRAWING NO. E 603-FFTF-03

RICHARD L. VanCLEAVE REGISTERED No. 9750 STATE OF INDIANA PROFESSIONAL ENGINEER

DESIGN STANDARDS ENGINEER

/s/ Richard L.VanCleave 9-01-04
DESIGN STANDARDS ENGINEER DATE

/s/ Richard K.Smutzer 9-01-04
CHIEF HIGHWAY ENGINEER DATE

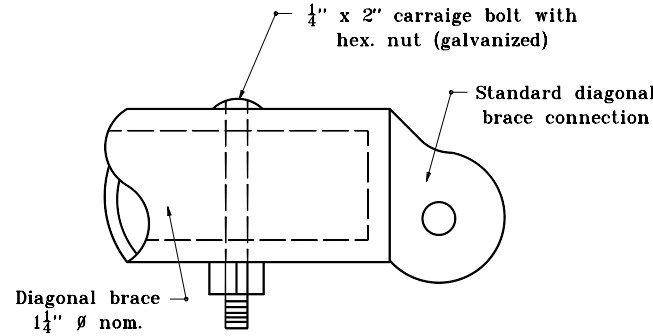

STANDARD METHOD

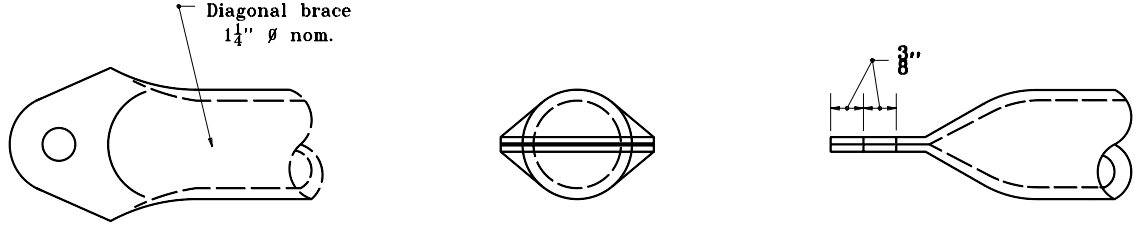

SIDE VIEW | END VIEW | TOP VIEW

ALTERNATE METHOD

DIAGONAL BRACE CONNECTION

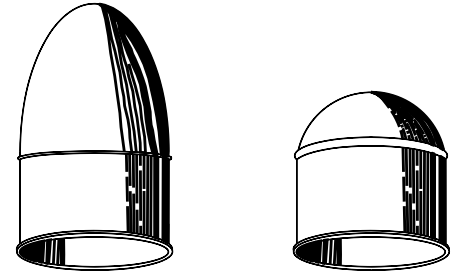

TYPICAL CAPS FOR TUBULAR POSTS

INDIANA DEPARTMENT OF TRANSPORTATION

BRACE CONNECTIONS AND POST CAPS

APRIL 1995

STANDARD DRAWING NO. **E 603-FFTF-04**

ANTHONY L. UREMOVICH REGISTERED No. 18095 STATE OF INDIANA PROFESSIONAL ENGINEER

DESIGN STANDARDS ENGINEER

DETAILS PLACED IN THIS FORMAT 7-27-99

/s/ Anthony L. Uremovich 7-27-99
DESIGN STANDARDS ENGINEER DATE

/s/ Firooz Zandi 7-27-99
CHIEF HIGHWAY ENGINEER DATE

ORIGINALLY APPROVED 4-03-95

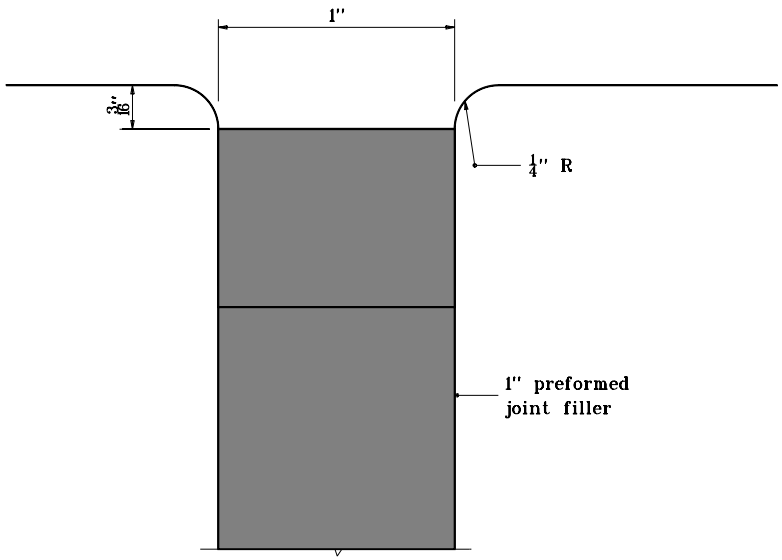

SILICONE JOINT SEALANT

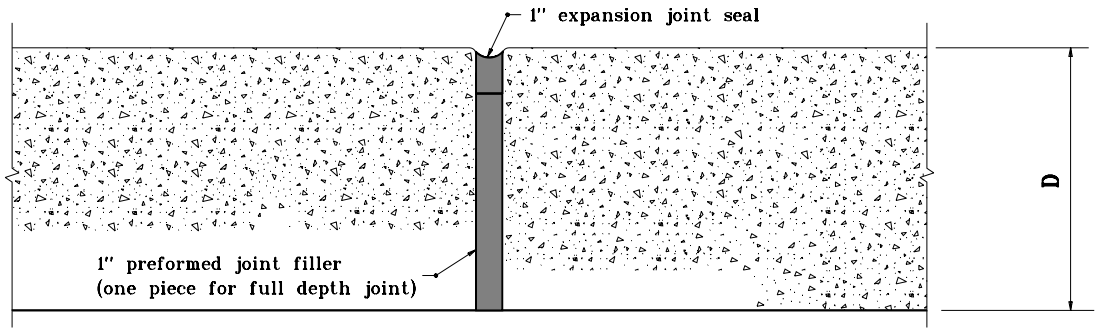

SECTION THROUGH JOINT

INDIANA DEPARTMENT OF TRANSPORTATION

SIDEWALK EXPANSION JOINT

SEPTEMBER 1999

STANDARD DRAWING NO. **E 604-CCSJ-01**

ANTHONY L. UREMOVICH REGISTERED No. 18095 STATE OF INDIANA PROFESSIONAL ENGINEER

DESIGN STANDARDS ENGINEER

/s/ Anthony L. Uremovich 9-01-99
DESIGN STANDARDS ENGINEER DATE

/s/ Donald W. Lucas 9-01-99
CHIEF HIGHWAY ENGINEER DATE

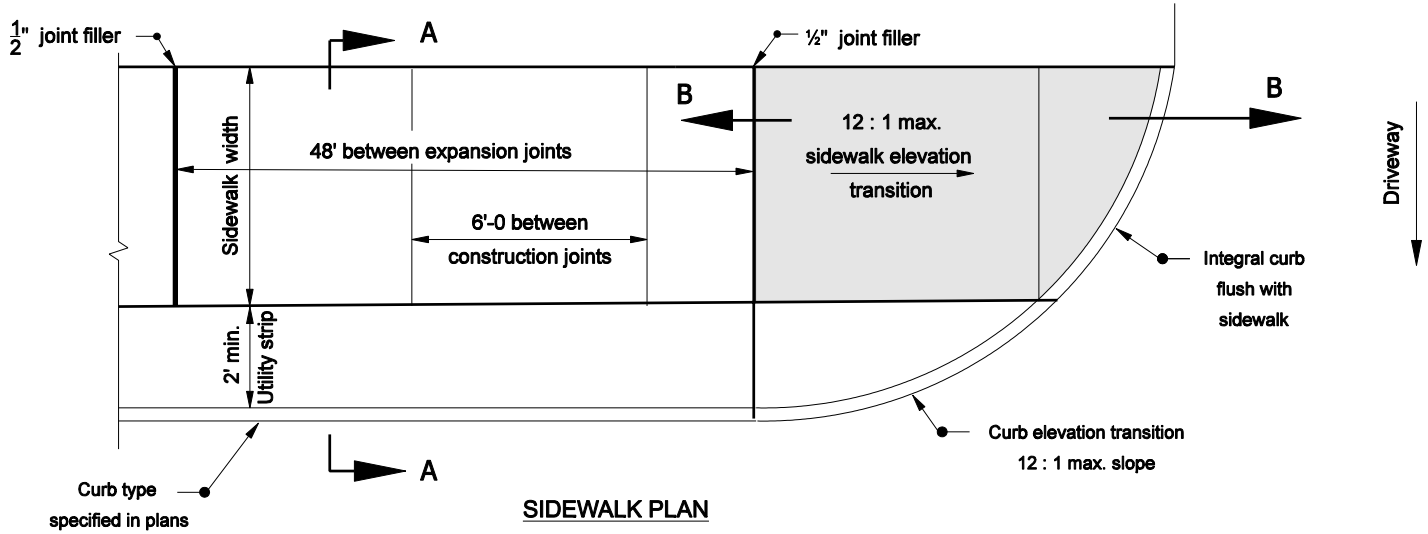

SIDEWALK PLAN

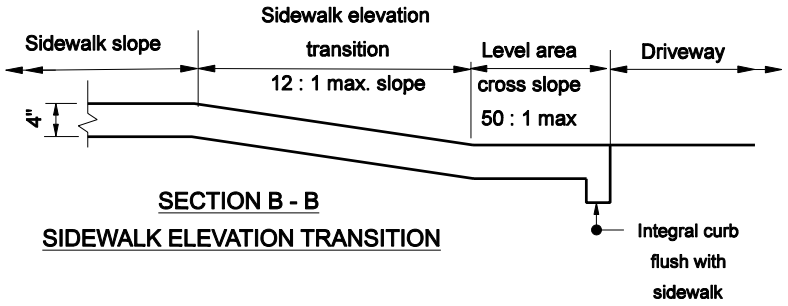

SECTION B - B
SIDEWALK ELEVATION TRANSITION

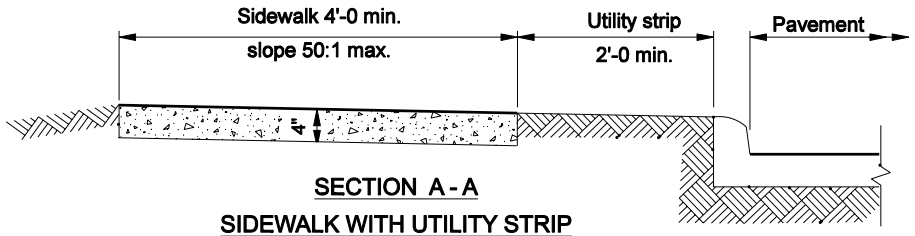

SECTION A - A
SIDEWALK WITH UTILITY STRIP

INDIANA DEPARTMENT OF TRANSPORTATION

SIDEWALK DETAILS

SIDEWALK WITH UTILITY STRIP

SEPTEMBER 2005

STANDARD DRAWING NO. E 604-SDWK-01

RICHARD L. VanCLEAVE REGISTERED No. 9750 STATE OF INDIANA PROFESSIONAL ENGINEER

DESIGN STANDARDS ENGINEER

/s/ Richard L. VanCleave 9-01-05
DESIGN STANDARDS ENGINEER DATE

/s/ Richard K. Smutzer 9-01-05
CHIEF HIGHWAY ENGINEER DATE

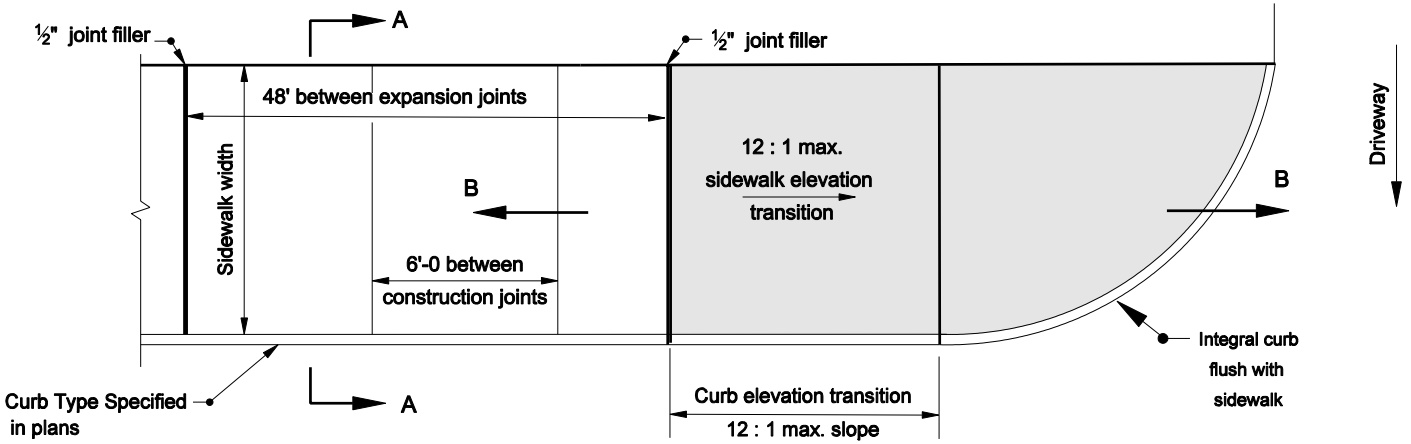

SIDEWALK PLAN

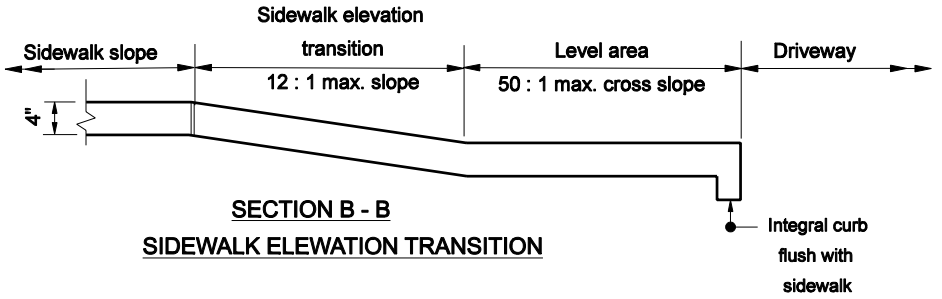

SECTION B - B
SIDEWALK ELEWATION TRANSITION

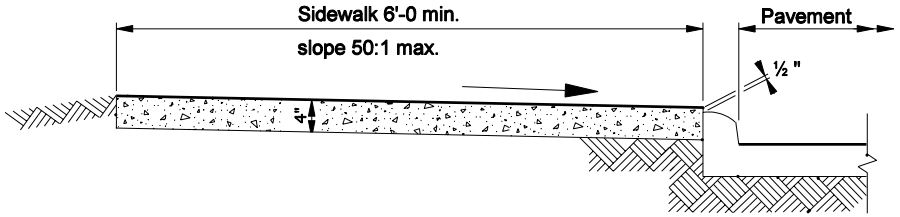

SECTION A - A
SIDEWALK ADJACENT TO CURB

INDIANA DEPARTMENT OF TRANSPORTATION

SIDEWALK DETAILS

SIDEWALK ADJACENT TO CURB
SEPTEMBER 2005

STANDARD DRAWING NO. E 604-SDWK-02

RICHARD L. VanCLEAVE REGISTERED No. 9750 STATE OF INDIANA PROFESSIONAL ENGINEER
DESIGN STANDARDS ENGINEER

/s/ Richard L. VanCleave 9-01-05
DESIGN STANDARDS ENGINEER DATE

/s/ Richard K. Smutzer 9-01-05
CHIEF HIGHWAY ENGINEER DATE

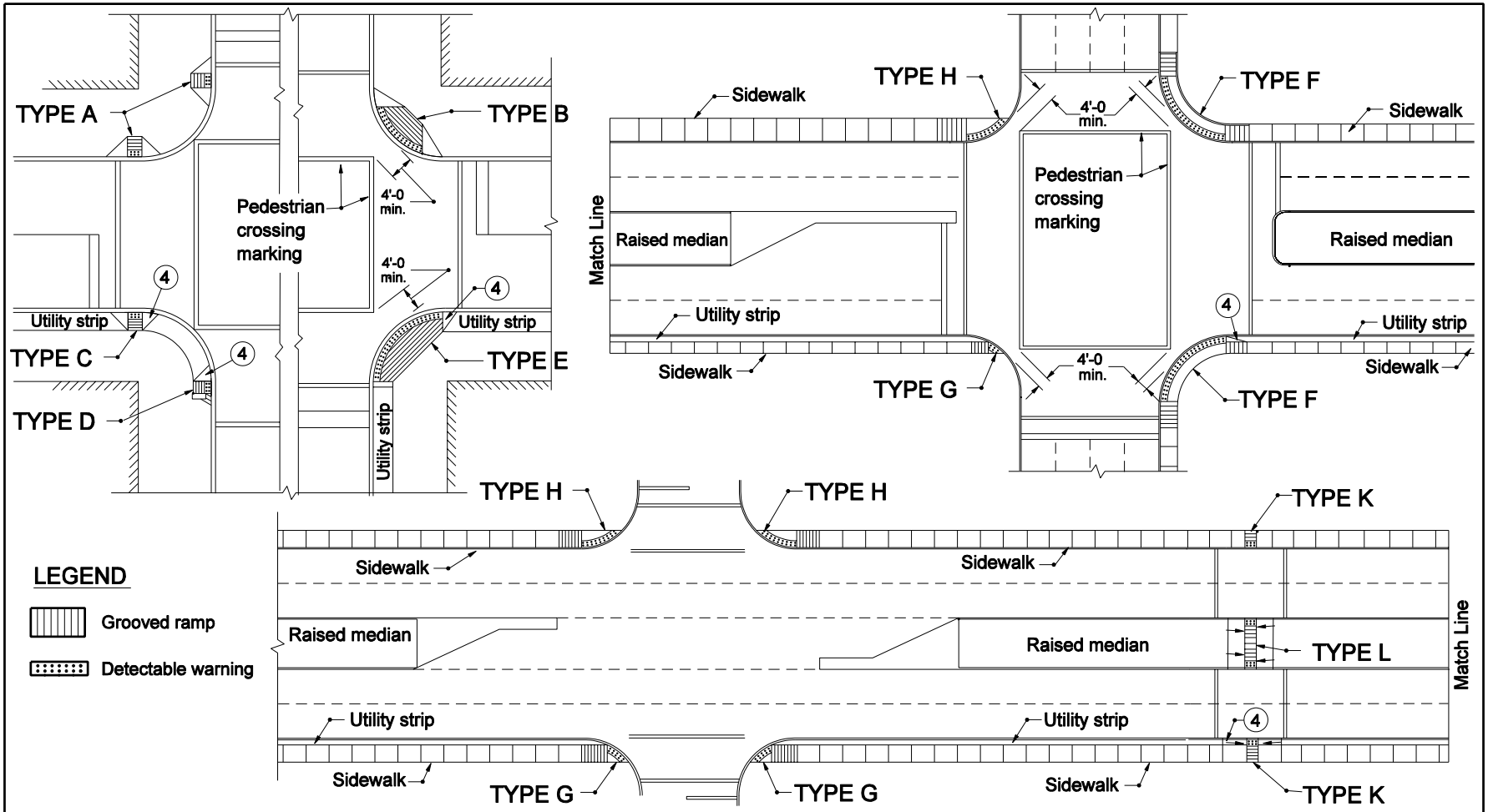

1. The curb ramp type includes the ramp and flared sides as indicated on the details. A level landing shall be provided at the high end of every curb ramp.
2. For details of sidewalk curb ramp types see Standard Drawings E 604-SWCR-03 to -11.
3. The curb ramps shall be placed within the marked crosswalk area.

④ Flared side of sidewalk curb ramp next to utility strip shall be sodded.

5. See Standard Drawing E 604-SWCR-02 for General Notes.

INDIANA DEPARTMENT OF TRANSPORTATION

LOCATION PLAN FOR SIDEWALK CURB RAMPS

SEPTEMBER 2005

STANDARD DRAWING NO. E 604-SWCR-01

RICHARD L. VanCLEAVE REGISTERED No. 9750 STATE OF INDIANA PROFESSIONAL ENGINEER

DESIGN STANDARDS ENGINEER

/s/ Richard L. VanCleave 9-01-05
DESIGN STANDARDS ENGINEER DATE

/s/ Richard K. Smutzer 9-01-05
CHIEF HIGHWAY ENGINEER DATE

GENERAL NOTES :

1. These dimensions are based on a 6 in. curb height. They shall be proportionally adjusted for other curb heights.
2. Where site infeasibility precludes construction to the width shown, such width may be decreased to a minimum of 3'-0.
3. The bottom edge of the curb ramp shall be flush with the edge of adjacent pavement and gutter line.
4. Landing areas at the top of curb ramps shall have maximum cross slope of 50 : 1 in any direction. When site infeasibility precludes a landing slope of 50 : 1 in any direction, the slope perpendicular to the curb face shall not exceed 50 :1.
5. If site infeasibility precludes construction to the width shown, the landing width may be decreased to 3'-0 minimum. The running slope of the curb ramp may be steepened to a maximum of 10 : 1 for a maximum 6 in. rise.
6. Drainage inlets should be located uphill from curb ramps to prevent puddles at the path of travel.
7. See Standard Drawing E 604-SWCR-12 for improved access on narrow sidewalks.
8. Algebraic difference in grade between the base of curb ramp and the gutter shall be limited to less than 11%. If it is not practical, a 2'-0 wide level strip shall be provided. See detail sketch.
9. Minimum recommended width of curb ramp is 4'-0.

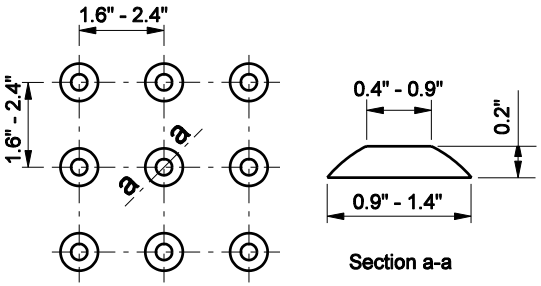

TRUNCATED DOMES USED IN DETECTABLE WARNINGS

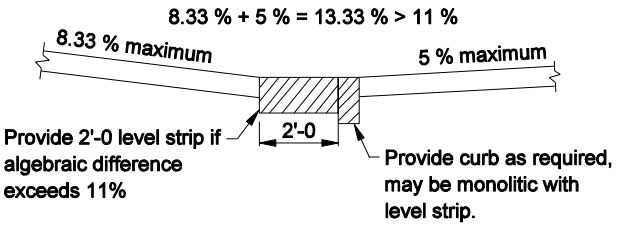

CHANGE OF GRADE

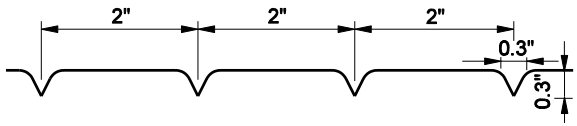

DETAIL OF RAMP GROOVES

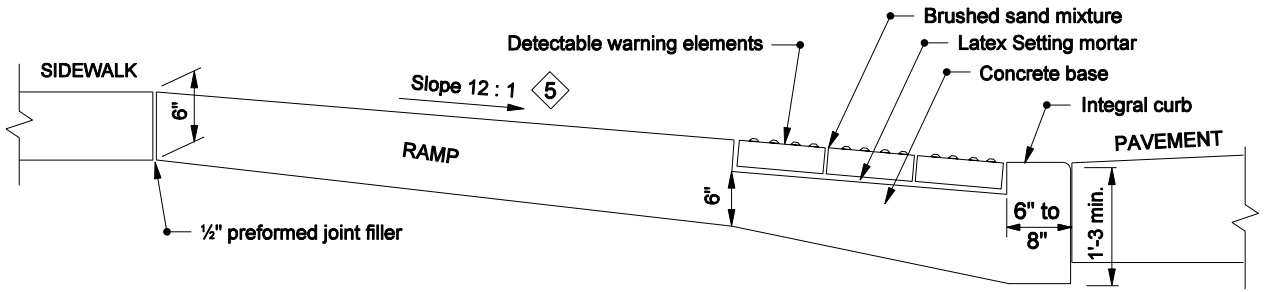

RAMP AND BRICK SURFACE CONSTRUCTION DETAIL

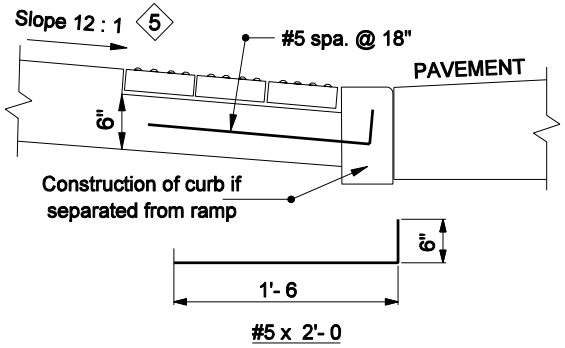

ALTERNATE CURB CONSTRUCTION

INDIANA DEPARTMENT OF TRANSPORTATION

SIDEWALK CURB RAMPS GENERAL NOTES & DETAILS

SEPTEMBER 2005

STANDARD DRAWING NO. E 604-SWCR-02

RICHARD L. VanCLEAVE REGISTERED No. 9750 STATE OF INDIANA PROFESSIONAL ENGINEER

DESIGN STANDARDS ENGINEER

/s/ Richard L. VanCleave 9-01-05
DESIGN STANDARDS ENGINEER DATE

/s/ Richard K. Smutzer 9-01-05
CHIEF HIGHWAY ENGINEER DATE

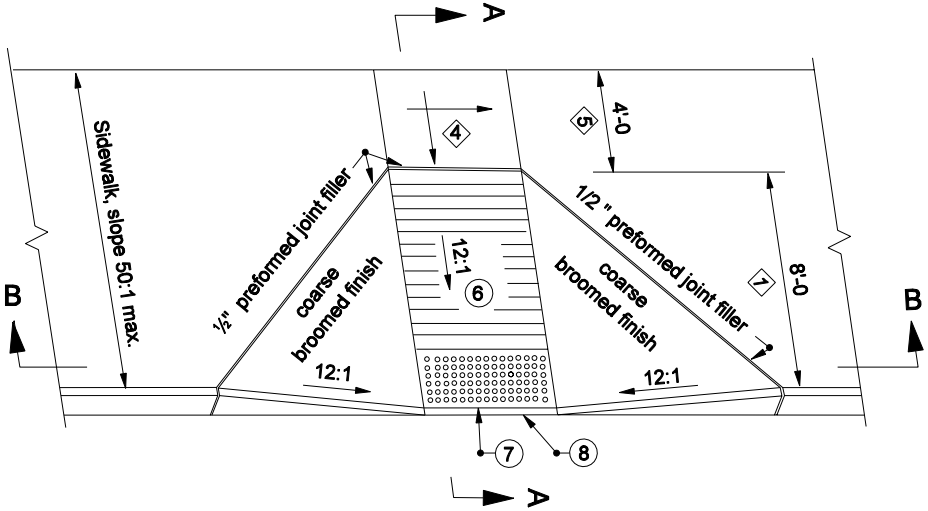

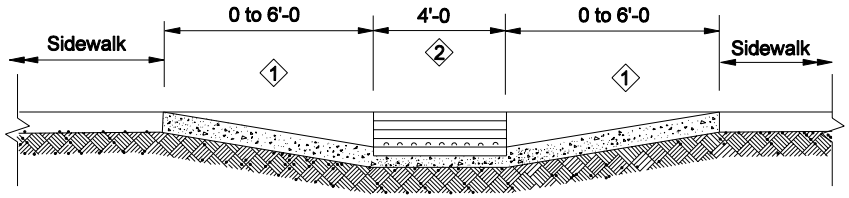

SECTION B-B

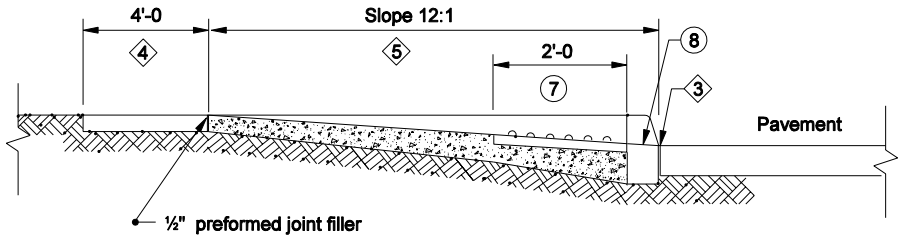

SECTION A-A

NOTES :

6. See Standard Drawing E 604-SWCR-02 for groove details.
7. See Standard Drawing E 604-SWCR-02 for details of the detectable warning.
8. See Standard Drawing E 604-SWCR-02 for alternate curb construction.
10. See Standard Drawing E 604-SWCR-01 and -02 for Location Plan and General Notes respectively.
11. See Standard Drawing E 604-SWCR-02 for typical ramp construction detail.

INDIANA DEPARTMENT OF TRANSPORTATION

SIDEWALK CURB RAMP TYPE A

SEPTEMBER 2005

STANDARD DRAWING NO. E 604-SWCR-03

RICHARD L. VanCLEAVE REGISTERED No. 9750 STATE OF INDIANA PROFESSIONAL ENGINEER

DESIGN STANDARDS ENGINEER

/s/ Richard L. VanCleave 9-01-05
DESIGN STANDARDS ENGINEER DATE

/s/ Richard K. Smutzer 9-01-05
CHIEF HIGHWAY ENGINEER DATE

NOTES :

(6) See Standard Drawing E 604-SWCR-02 for groove details.

(7) See Standard Drawing E 604-SWCR-02 for details of the detectable warnings.

(8) See Standard Drawing E 604-SWCR-02 for alternate curb construction.

9. See Standard Drawing E 604-SWCR-02 for typical ramp construction detail.

10. See Standard Drawing E 604-SWCR-01 and -02 for Location Plan and General Notes respectively.

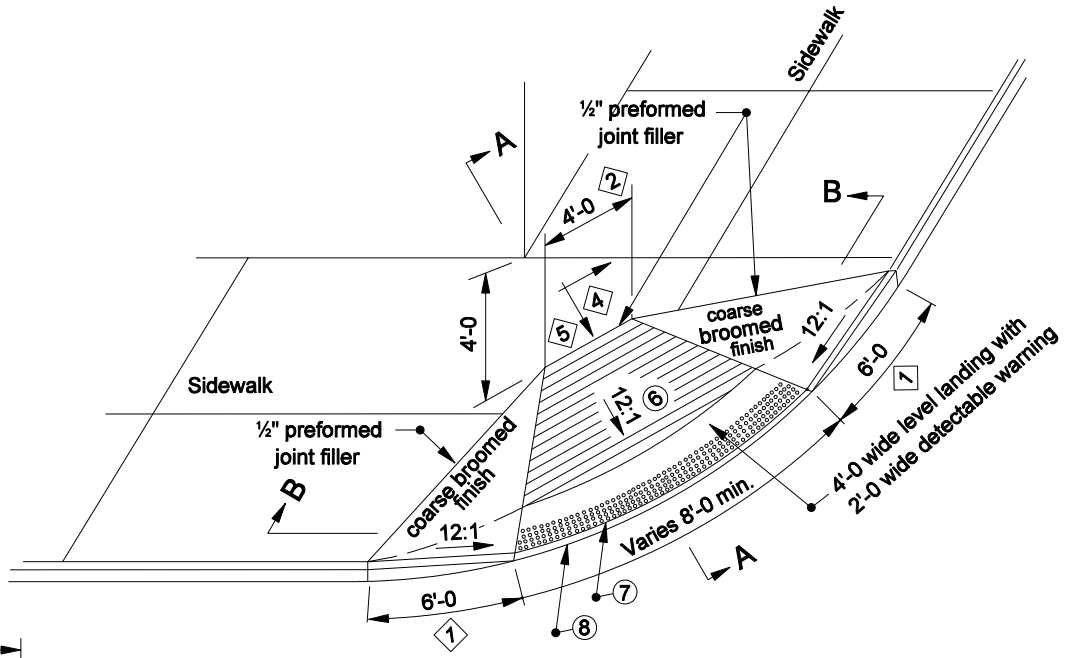

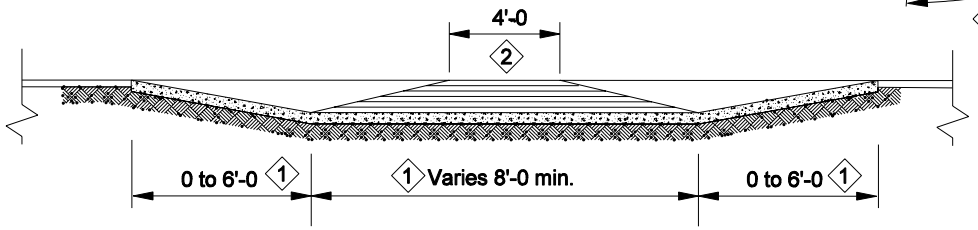

SECTION B-B

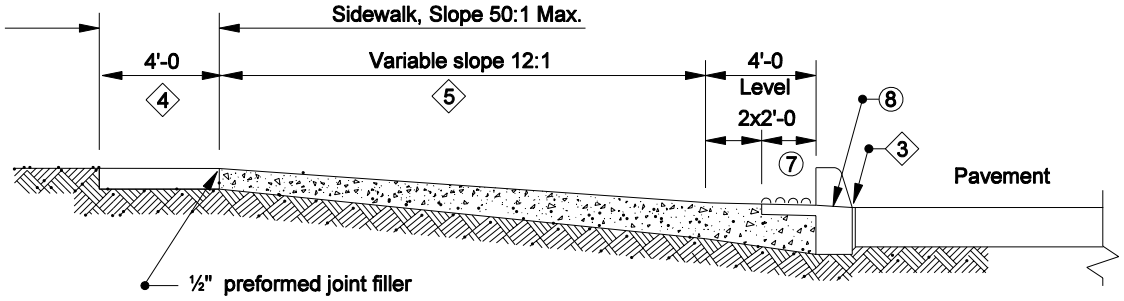

SECTION A-A

INDIANA DEPARTMENT OF TRANSPORTATION

SIDEWALK CURB RAMP TYPE B

SEPTEMBER 2005

STANDARD DRAWING NO. E 604-SWCR-04

RICHARD L. VanCLEAVE REGISTERED No. 9750 STATE OF INDIANA PROFESSIONAL ENGINEER

DESIGN STANDARDS ENGINEER

/s/ Richard L. VanCleave 9-01-05
DESIGN STANDARDS ENGINEER DATE

/s/ Richard K. Smutzer 9-01-05
CHIEF HIGHWAY ENGINEER DATE

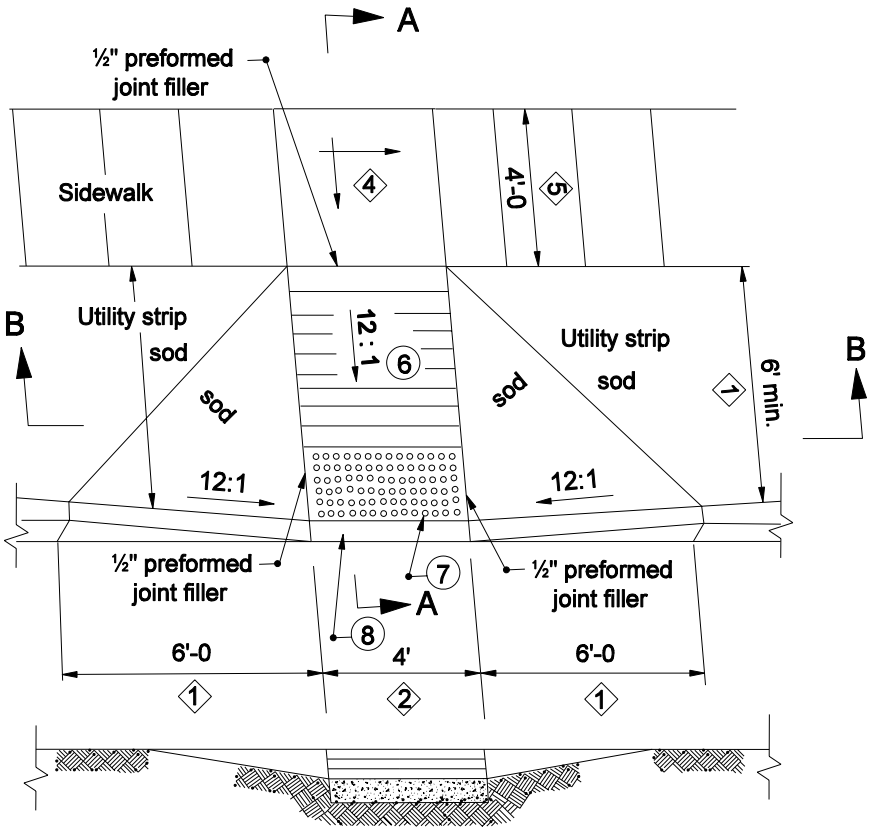

SECTION B-B

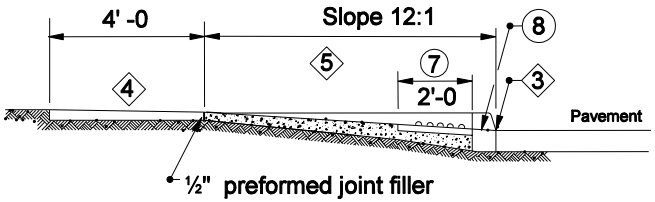

SECTION A-A

NOTES :

6. See Standard Drawing E 604-SWCR-02 for groove details.
7. See Standard Drawing E 604-SWCR-02 for details of the detectable warning surface.
8. See Standard Drawing E 604-SWCR-02 for alternate curb construction.
9. See Standard Drawing E 604-SWCR-02 for typical ramp construction detail.
10. See Standard Drawing E 604-SWCR-01 and -02 for Location Plan and General Notes respectively.

INDIANA DEPARTMENT OF TRANSPORTATION

SIDEWALK CURB RAMPS TYPE C

SEPTEMBER 2005

STANDARD DRAWING NO. E 604-SWCR-05

RICHARD L. VanCLEAVE REGISTERED No. 9750 STATE OF INDIANA PROFESSIONAL ENGINEER

DESIGN STANDARDS ENGINEER

/s/ Richard L. VanCleave 9-01-05
DESIGN STANDARDS ENGINEER DATE

/s/ Richard K. Smutzer 9-01-05
CHIEF HIGHWAY ENGINEER DATE

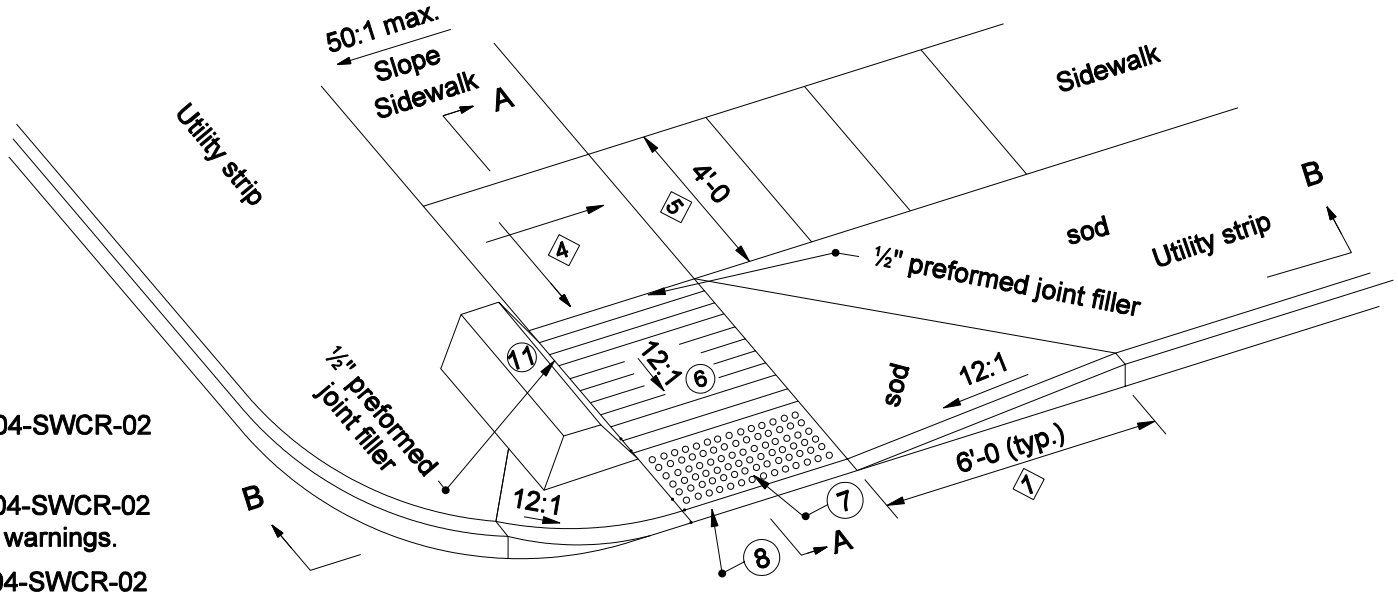

NOTES :

⑥ See Standard Drawing E 604-SWCR-02 for groove details.

⑦ See Standard Drawing E 604-SWCR-02 for details of the detectable warnings.

⑧ See Standard Drawing E 604-SWCR-02 for alternate curb construction.

9. See Standard Drawing E 604-SWCR-02 for typical ramp construction detail.

10. See Standard Drawing E 604-SWCR-01 and -02 for Plan Location and General Notes respectively.

⑪ Street furnishing such as planter, signal base, etc.

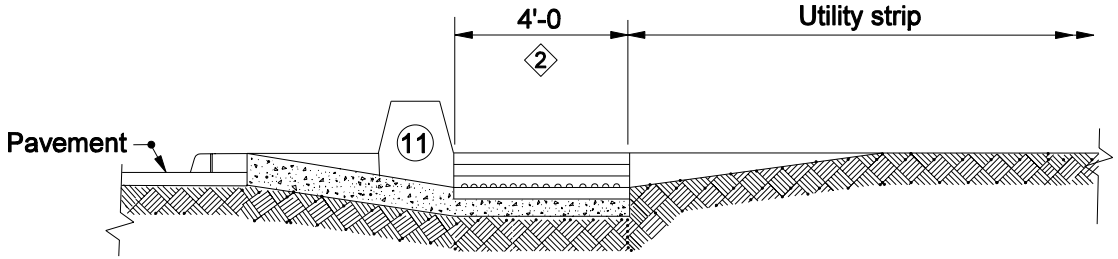

SECTION B-B

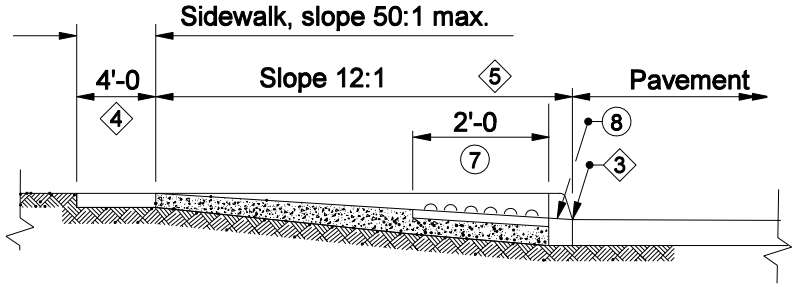

SECTION A-A

INDIANA DEPARTMENT OF TRANSPORTATION

SIDEWALK RAMP CURB TYPE D

SEPTEMBER 2005

STANDARD DRAWING NO. E 604-SWCR-06

RICHARD L. VanCLEAVE REGISTERED No. 9750 STATE OF INDIANA PROFESSIONAL ENGINEER

DESIGN STANDARDS ENGINEER

/s/ Richard L. VanCleave 9-01-05
DESIGN STANDARDS ENGINEER DATE

/s/ Richard K. Smutzer 9-01-05
CHIEF HIGHWAY ENGINEER DATE

NOTES :

(6) See Standard Drawing E 604-SWCR-02 for groove details.

(7) See Standard Drawing E 604-SWCR-02 for details of detectable warning surface.

(8) See Standard Drawing E 604-SWCR-02 for alternate curb construction.

9. See Standard Drawing E 604-SWCR-02 for typical ramp construction detail.

10. See Standard Drawing E 604-SWCR-01 and -02 for Plan Location and General Notes respectively.

(11) Street furnishing such as planter, signal base, etc.

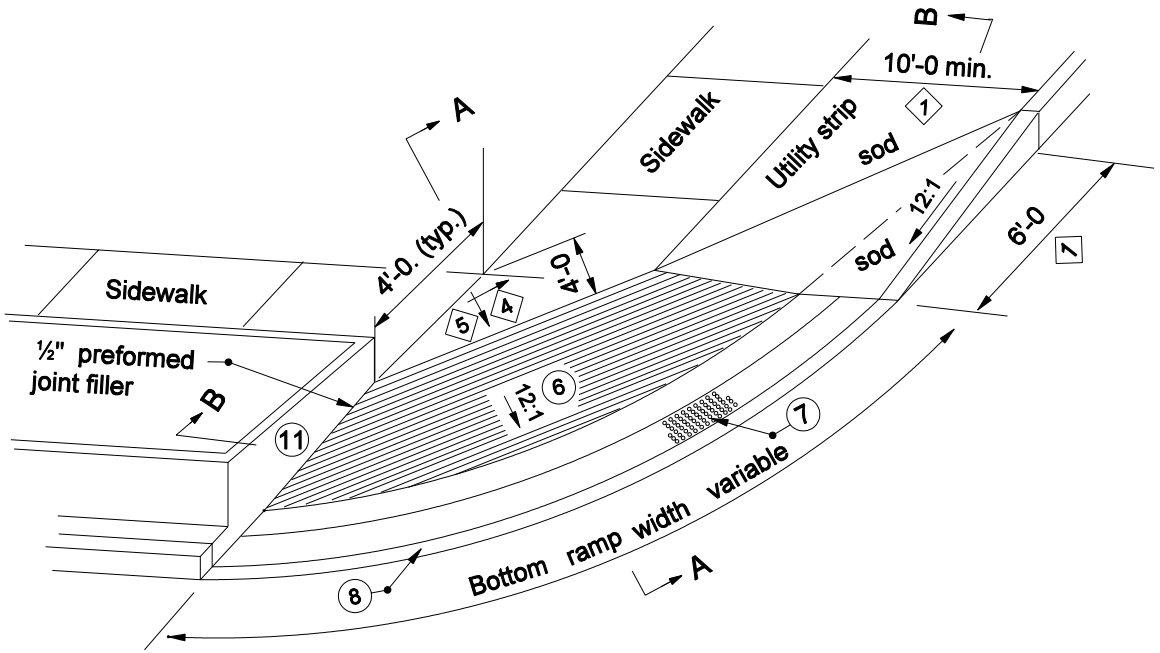

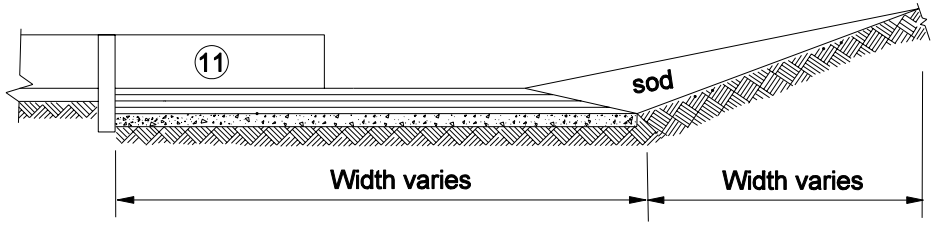

SECTION B-B

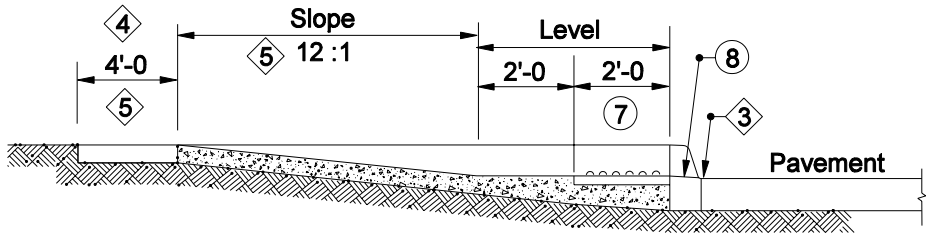

SECTION A-A

INDIANA DEPARTMENT OF TRANSPORTATION

SIDEWALK CURB RAMPS TYPE E

SEPTEMBER 2005

STANDARD DRAWING NO. E 604-SWCR-07

RICHARD L. VanCLEAVE REGISTERED No. 9750 STATE OF INDIANA PROFESSIONAL ENGINEER

DESIGN STANDARDS ENGINEER

/s/ Richard L. VanCleave 9-01-05
DESIGN STANDARDS ENGINEER DATE

/s/ Richard K. Smutzer 9-01-05
CHIEF HIGHWAY ENGINEER DATE

NOTES :

(6) See Standard Drawing E 604-SWCR-02 for groove details.

(7) See Standard Drawing E 604-SWCR-02 for details of the detectable warnings.

(8) See Standard Drawing E 604-SWCR-02 for alternate curb construction.

9. See Standard Drawing E 604-SWCR-02 for typical ramp construction detail.

(10) Curb or wall shall be used when necessary based on field conditions.

11. See Standard Drawings E 604-SWCR-01 and -02 for Location Plan and General Notes respectively.

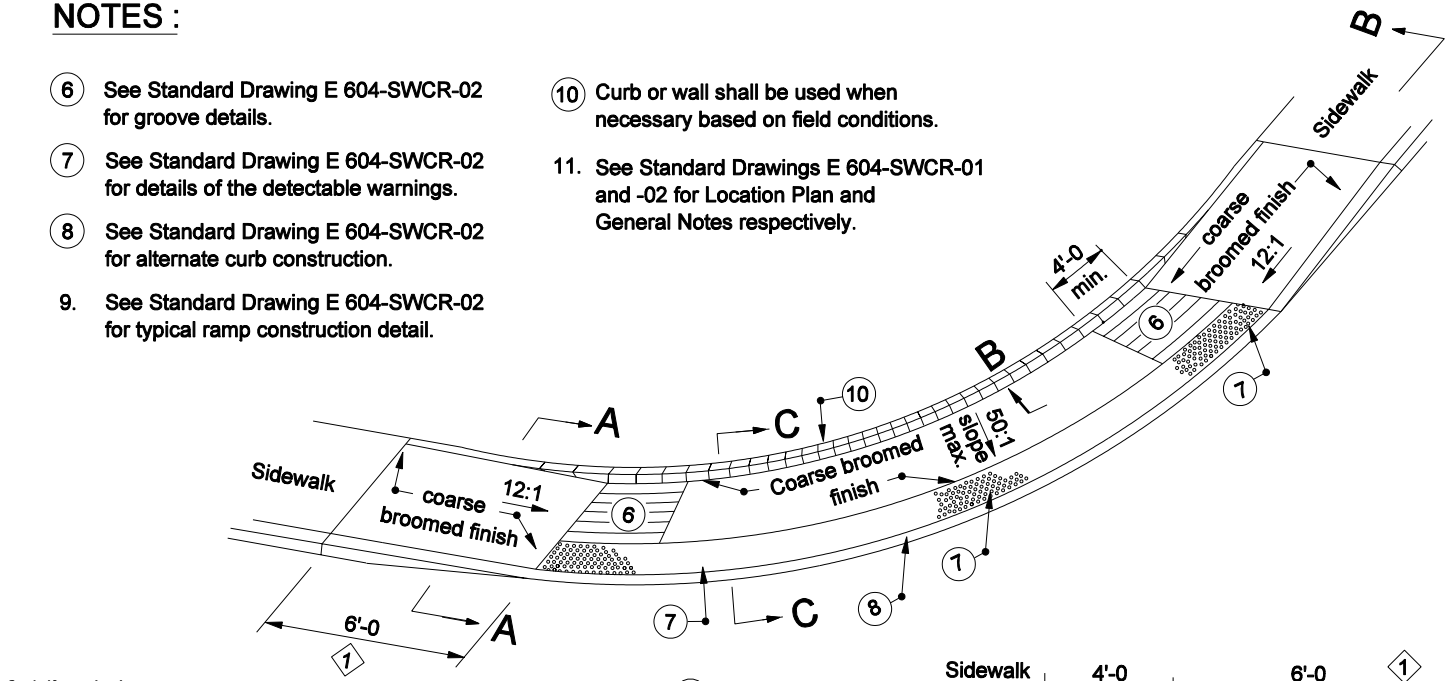

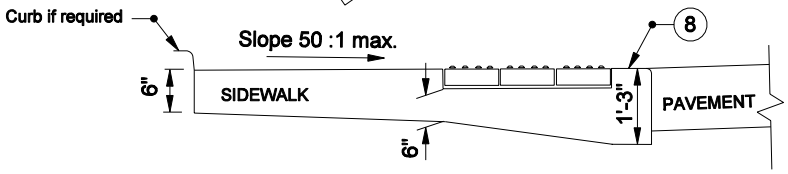

SECTION C-C

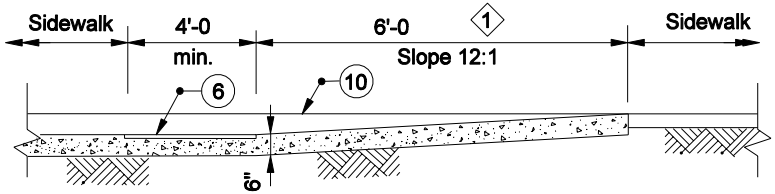

SECTION B-B

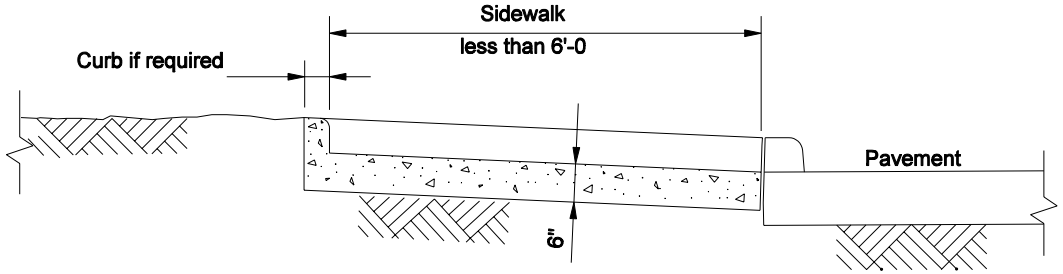

SECTION A-A

INDIANA DEPARTMENT OF TRANSPORTATION

SIDEWALK CURB RAMPS TYPE F

SEPTEMBER 2005

STANDARD DRAWING NO. E 604-SWCR-08

RICHARD L. VanCLEAVE REGISTERED No. 9750 STATE OF INDIANA PROFESSIONAL ENGINEER

DESIGN STANDARDS ENGINEER

/s/ Richard L. VanCleave 9-01-05
DESIGN STANDARDS ENGINEER DATE

/s/ Richard K. Smutzer 9-01-05
CHIEF HIGHWAY ENGINEER DATE

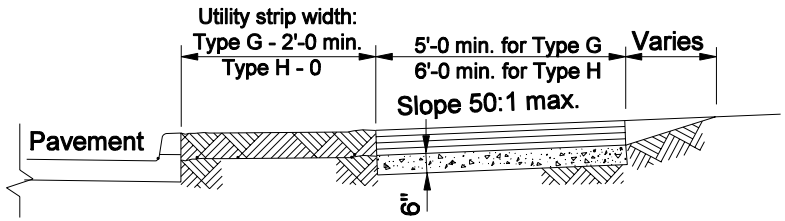

SECTION B-B

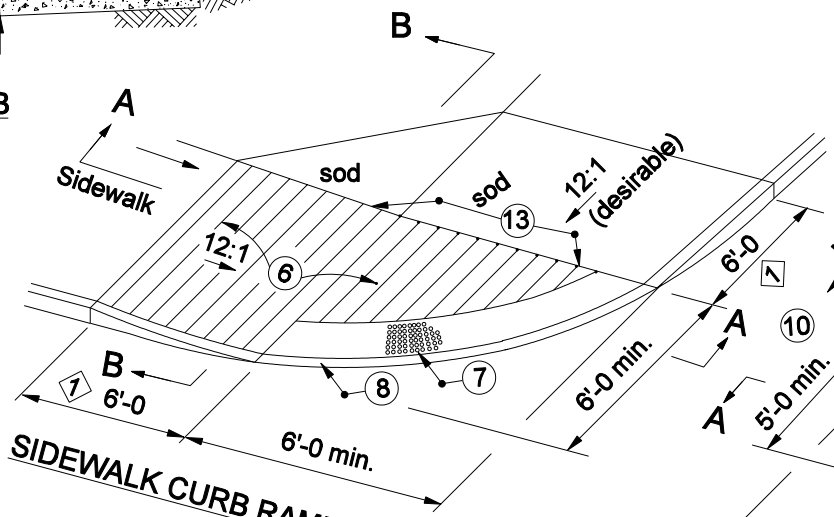

SIDEWALK CURB RAMP TYPE H

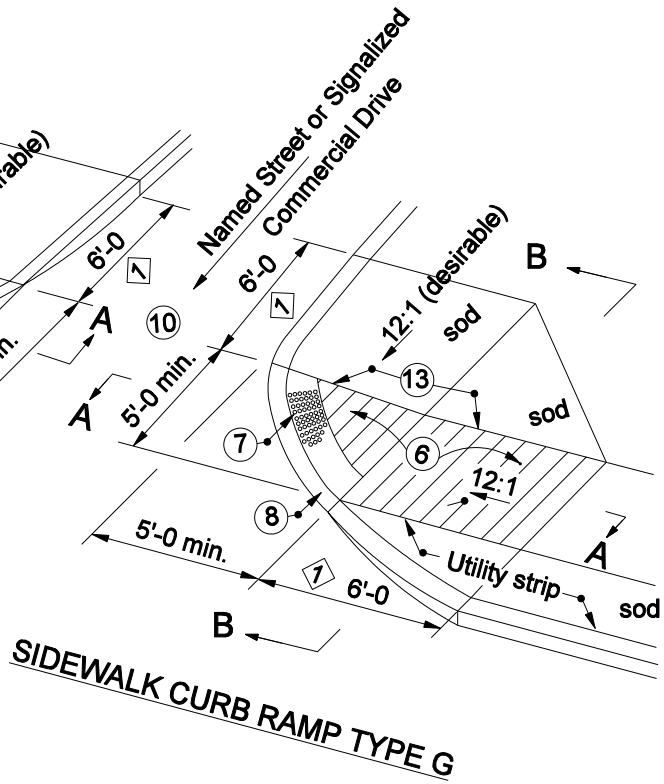

SIDEWALK CURB RAMP TYPE G

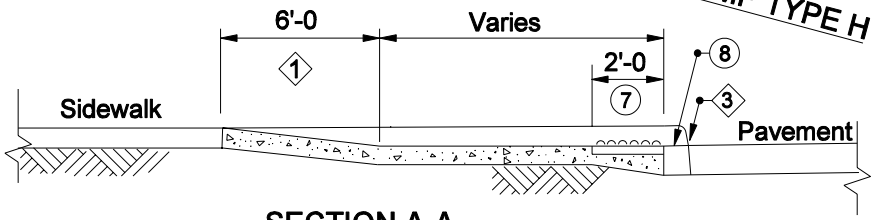

SECTION A-A

NOTES :

(6) See Standard Drawing E 604-SWCR-02 for groove details.

(7) See Standard Drawings E 604-SWCR-02 for details of the detectable warning surface.

(8) See Standard Drawing E 604-SWCR-02 for alternate curb construction.

(10) Sidewalk across approach shall be sloped at 50:1 maximum transversely.

11. See Standard Drawing E 604-SWCR-02 for typical ramp construction detail.

12. See Standard Drawing E 604-SWCR-01 and -02 for Location Plan and General Notes respectively.

(13) Vertical face curb optional.

INDIANA DEPARTMENT OF TRANSPORTATION

SIDEWALK CURB'S RAMP'S TYPE G AND TYPE H

SEPTEMBER 2005

STANDARD DRAWING NO. E 604-SWCR-09

RICHARD L. VanCLEAVE REGISTERED No. 9750 STATE OF INDIANA PROFESSIONAL ENGINEER

DESIGN STANDARDS ENGINEER

/s/ Richard L. VanCleave 9-01-05
DESIGN STANDARDS ENGINEER DATE

/s/ Richard K. Smutzer 9-01-05
CHIEF HIGHWAY ENGINEER DATE

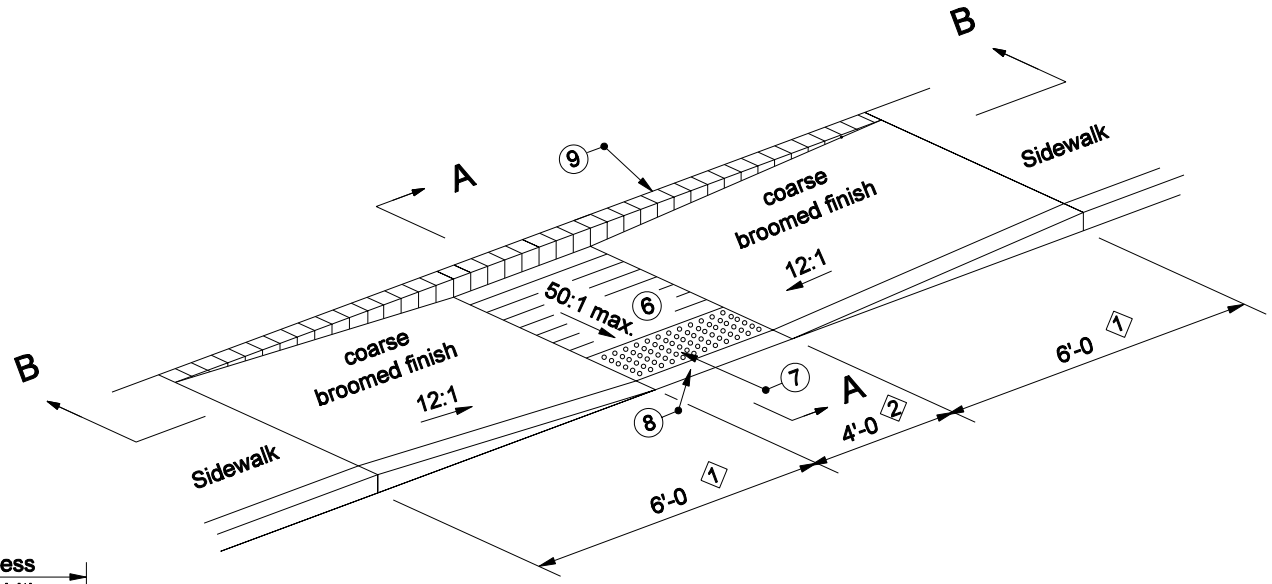

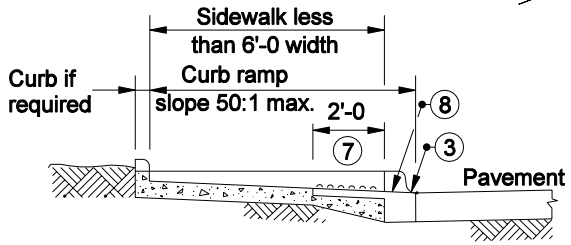

SECTION A-A

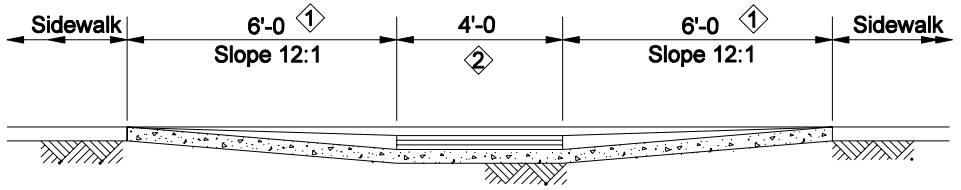

SECTION B-B

NOTES :

6. See Standard Drawing E 604-SWCR-02 for groove details.
7. See Standard Drawing E 604-SWCR-02 for details of detectable warnings surface.
8. See Standard Drawing E 604-SWCR-02 for alternate curb construction.
9. Curb optional. Shall be used when necessary based on field conditions.
10. See Standard Drawing E 604-SWCR-02 for typical ramp construction detail.
11. See Standard Drawing E 604-SWCR-01 and -02 for Location Plan and General Notes respectively.

INDIANA DEPARTMENT OF TRANSPORTATION

SIDEWALK CURB RAMP
TYPE K

SEPTEMBER 2005

STANDARD DRAWING NO. E 604-SWCR-10

RICHARD L. VanCLEAVE REGISTERED No. 9750 STATE OF INDIANA PROFESSIONAL ENGINEER

DESIGN STANDARDS ENGINEER

/s/ Richard L. VanCleave 9-01-05
DESIGN STANDARDS ENGINEER DATE

/s/ Richard K. Smutzer 9-01-05
CHIEF HIGHWAY ENGINEER DATE

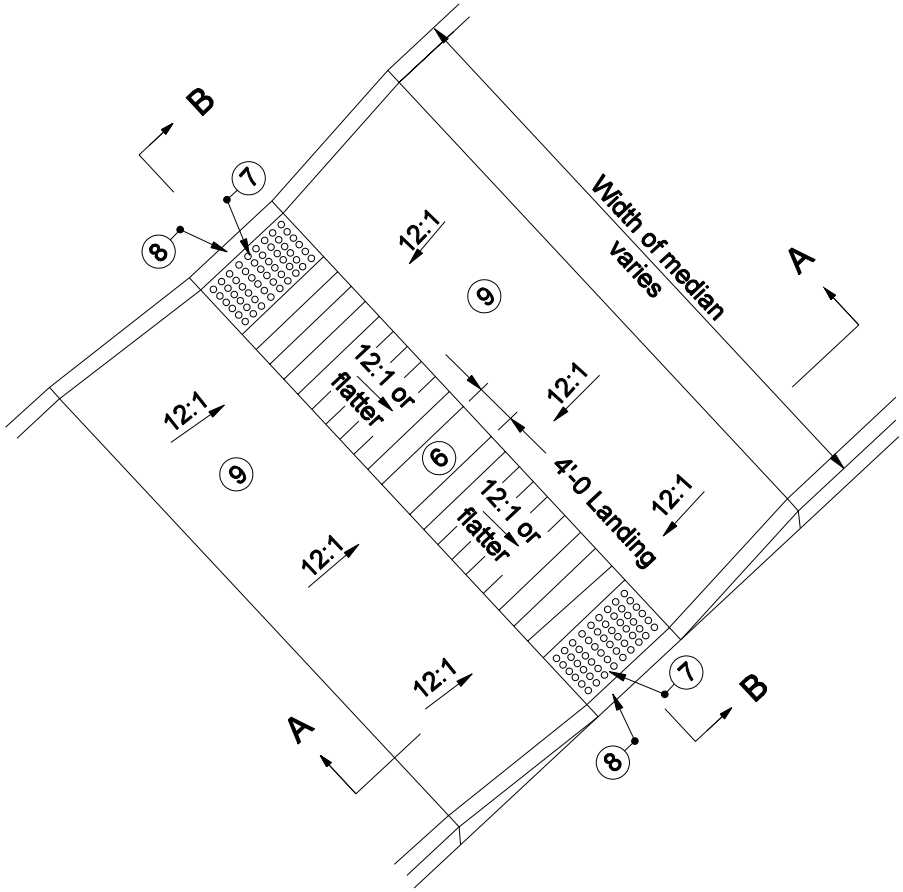

NOTES :

6. See Standard Drawing E 604-SWCR-02 for groove details.
7. See Standard Drawing E 604-SWCR-02 for details of the detectable warnings.
8. See Standard Drawing E 604-SWCR-02 for alternate curb construction.
9. Match material in place or in plans for median.
10. See Standard Drawing E 604-SWCR-02 for typical ramp construction details.
11. See Standard Drawing E 604-SWCR-01 and -02 for Location Plan and General Notes respectively.
12. Ramp cross slope 50:1 desirable or match grade of roadway.
13. Detectable warnings are not reguired where the roadway crossing is controlled by traffic signals timed to provide full width street crossing by pedestrians.

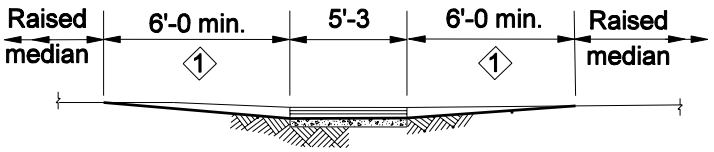

SECTION A-A

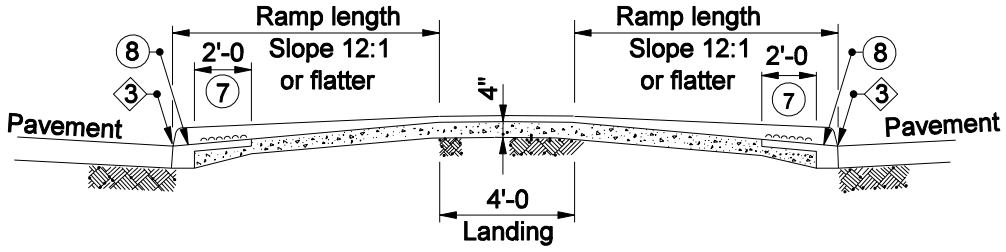

SECTION B-B

INDIANA DEPARTMENT OF TRANSPORTATION

SIDEWALK CURB RAMPS TYPE L

SEPTEMBER 2005

STANDARD DRAWING NO. E 604-SWCR-11

RICHARD L. VanCLEAVE REGISTERED No. 9750 STATE OF INDIANA PROFESSIONAL ENGINEER

DESIGN STANDARDS ENGINEER

/s/ Richard L. VanCleave 9-01-05
DESIGN STANDARDS ENGINEER DATE

/s/ Richard K. Smutzer 9-01-05
CHIEF HIGHWAY ENGINEER DATE

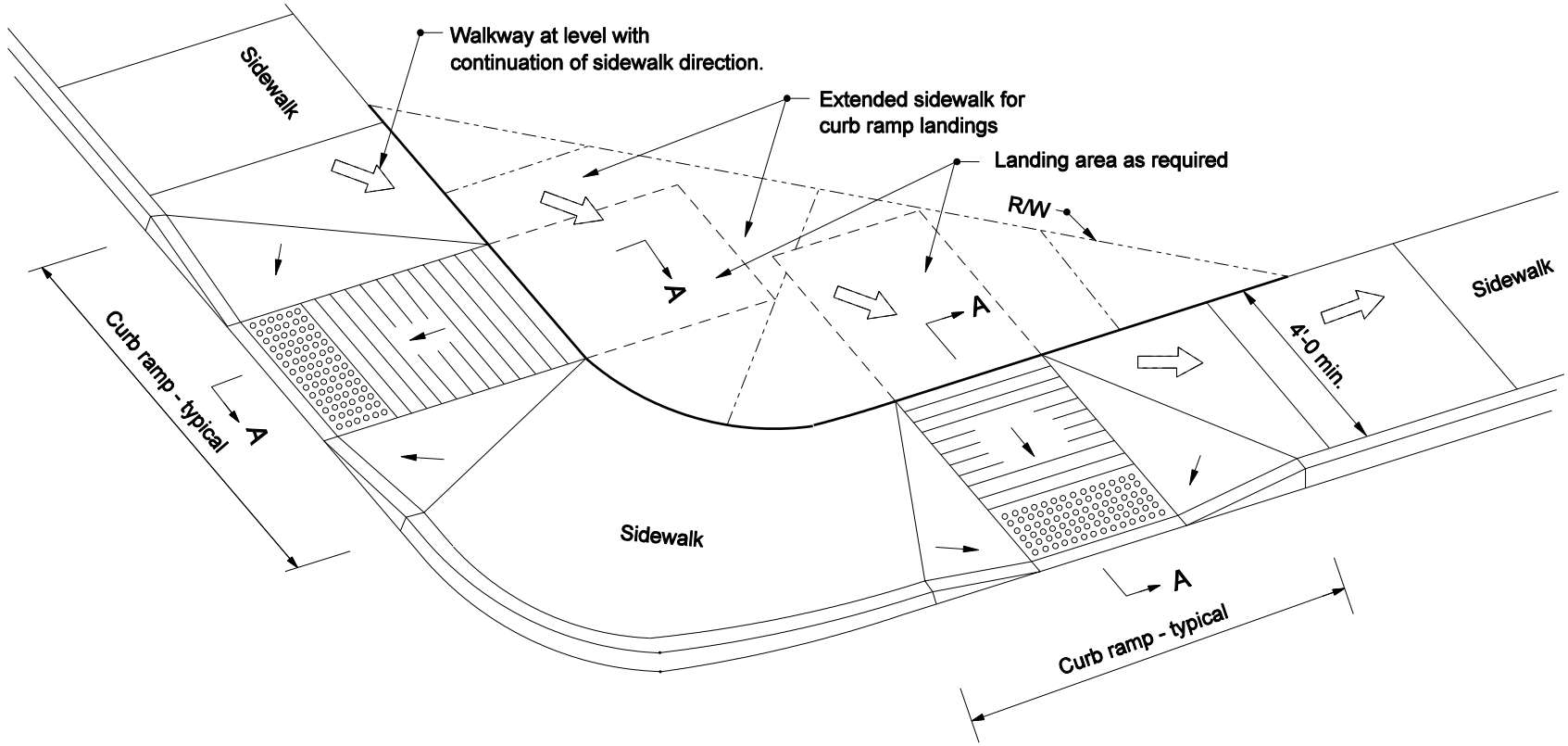

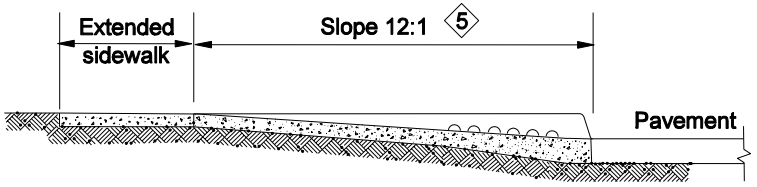

SECTION A-A

NOTES :

1. Additional right-of-way to widen sidewalks if applicable to improve accessibility on narrow sidewalks.
2. See Standard Drawing E 604-SWCR-02 and -03 to -11 for General Notes and typical curb ramps details respectively.

INDIANA DEPARTMENT OF TRANSPORTATION

SIDEWALK CURB RAMP'S IMPROVED ACCESS

SEPTEMBER 2005

STANDARD DRAWING NO. E 604-SWCR-12

RICHARD L. VanCLEAVE REGISTERED No. 9750 STATE OF INDIANA PROFESSIONAL ENGINEER

DESIGN STANDARDS ENGINEER

/s/ Richard L. VanCleave 9-01-05
DESIGN STANDARDS ENGINEER DATE

/s/ Richard K. Smutzer 9-01-05
CHIEF HIGHWAY ENGINEER DATE

QUANTITY ESTIMATE

Curb Ramp Type	6" curb		8" curb		Pay limits diagram
	Assumptions for calculation purposes (top landing not included in area)	Area sq. yd	Assumptions for calculation purposes (top landing not included in area)	Area sq. yd	
A	10' sidewalk	7.0	12' sidewalk	11.1	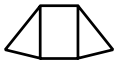
B	R = 10', 13' sidewalk R = 26', 18' sidewalk	16.4 21.4	R = 10', 15' sidewalk R = 25', 20' sidewalk	19.4 30.6	
C	6' utility strip	2.7	8' utility strip	3.5	
D	6' utility strip	2.7	8' utility strip	3.5	
E	10' utility strip on one side only, 10' radius	10.7	Not possible to construct on 10' utility strip	n / a	
F	R = 15', 4' sidewalk R = 25', 4' sidewalk	14.3 21.6	R = 15', 4' sidewalk R = 25', 4' sidewalk	16.1 23.3	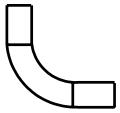
G	minimum dimensions	4.9	minimum dimensions	6.0	
H	minimum dimensions	6.3	minimum dimensions	7.7	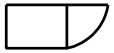
K	5' sidewalk	8.9	5' sidewalk	11.1	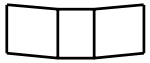
L	16' grass median width	9.3	16' grass median width	9.3	

INDIANA DEPARTMENT OF TRANSPORTATION

SIDEWALK CURB RAMPS QUANTITY ESTIMATE

SEPTEMBER 2005

STANDARD DRAWING NO. E 604-SWCR-13

RICHARD L. VanCLEAVE REGISTERED No. 9750 STATE OF INDIANA PROFESSIONAL ENGINEER

DESIGN STANDARDS ENGINEER

/s/ Richard L. VanCleave 9-01-05
DESIGN STANDARDS ENGINEER DATE

/s/ Richard K. Smutzer 9-01-05
CHIEF HIGHWAY ENGINEER DATE

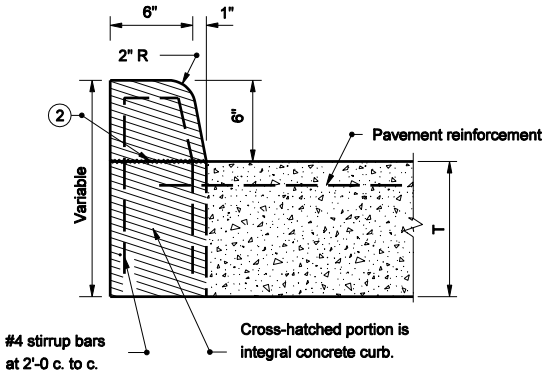

INTEGRAL CONCRETE CURB
(BARRIER)

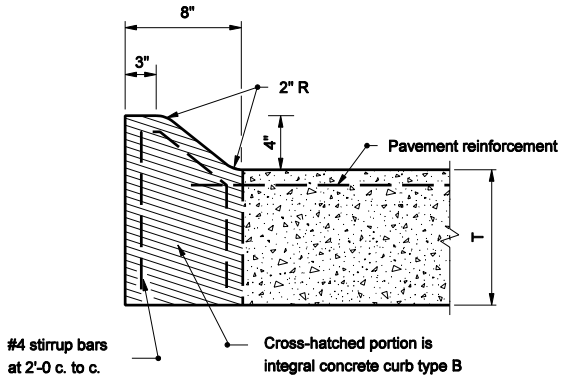

INTEGRAL CONCRETE CURB
TYPE B
(MOUNTABLE)

NOTES

1. 8" for integral concrete curb type B or C and 7" for integral concrete curb.
2. Concrete below this line may be poured with the pavement.

LEGEND

T = Nominal pavement thickness

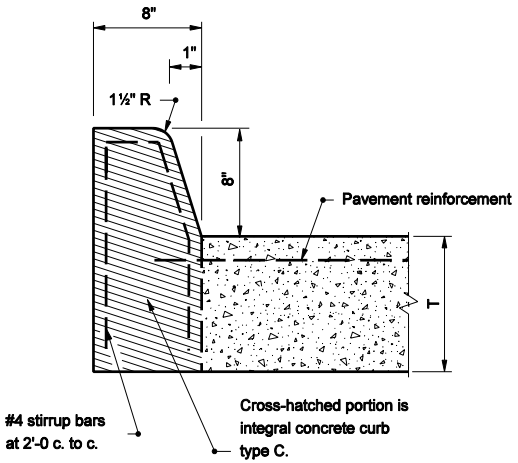

INTEGRAL CONCRETE CURB
TYPE C
(BARRIER)

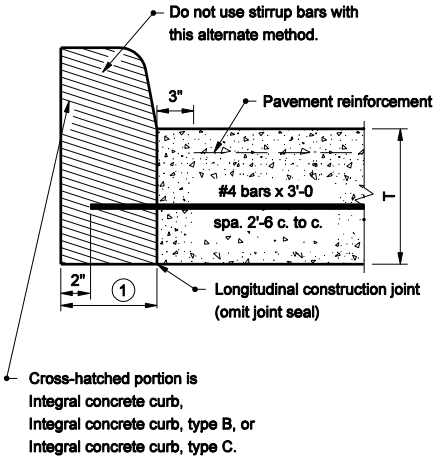

ALTERNATE METHOD
OF CONSTRUCTION FOR ALL TYPES
OF INTEGRAL CONCRETE CURB

INDIANA DEPARTMENT OF TRANSPORTATION

INTEGRAL CONCRETE CURB

SEPTEMBER 2004

STANDARD DRAWING NO. E 605-CCIN-01

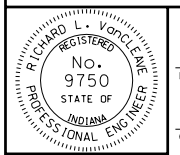

DESIGN STANDARDS ENGINEER

/s/ Richard L. VanCleave 9-01-04
DESIGN STANDARDS ENGINEER — DATE

/s/ Richard K. Smutzer 9-01-04
CHIEF HIGHWAY ENGINEER — DATE

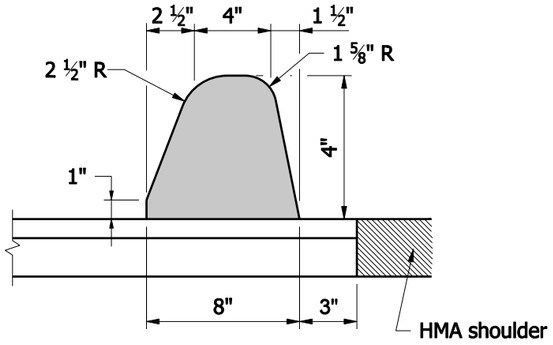

ASPHALT CURB
(MOUNTABLE)

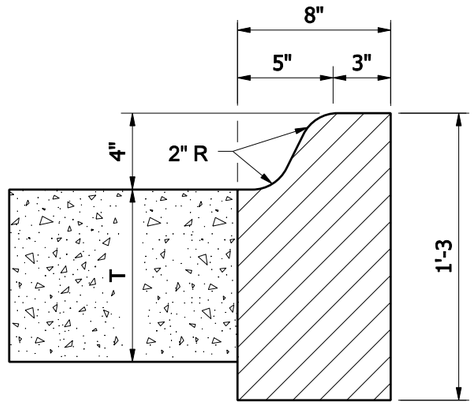

CONCRETE CURB
TYPE B
(MOUNTABLE)

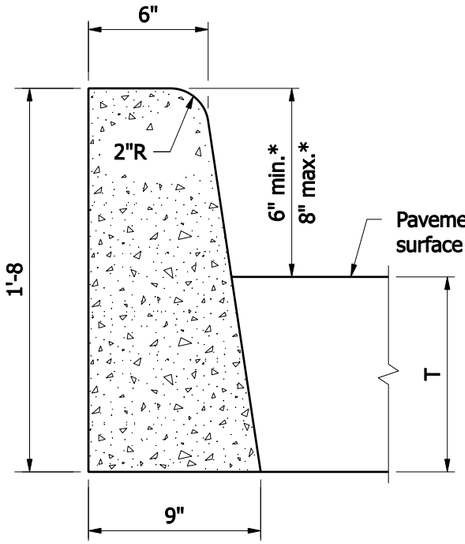

CONCRETE CURB
(BARRIER)

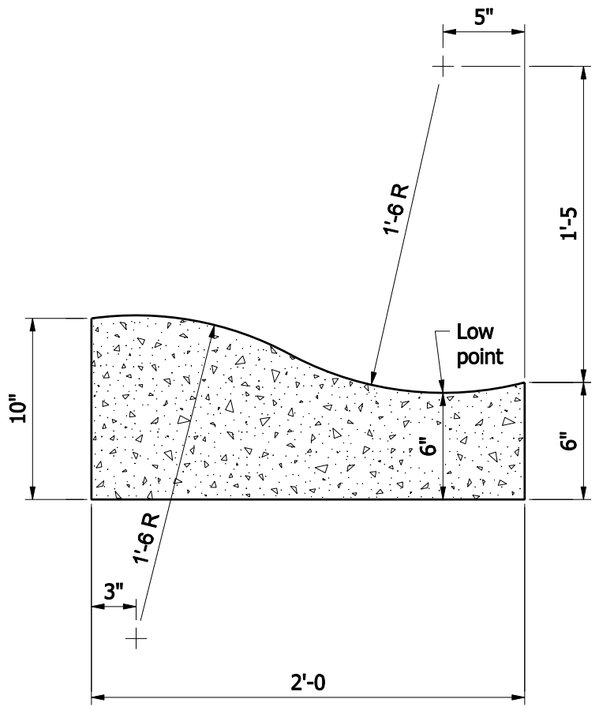

ROLLED CURB
(MOUNTABLE)

LEGEND

T = Curb embedment-12" min.
* = Curb face exposure height

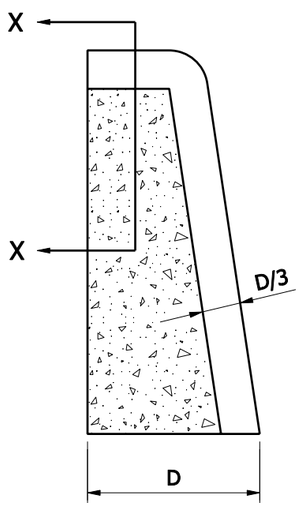

CURB

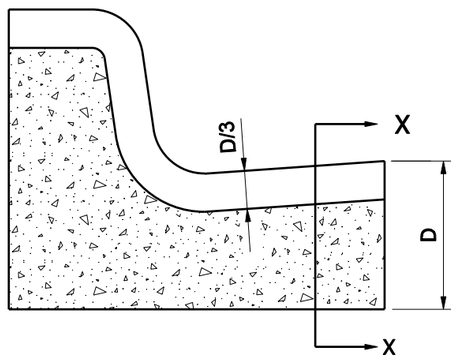

COMBINED CURB & GUTTER

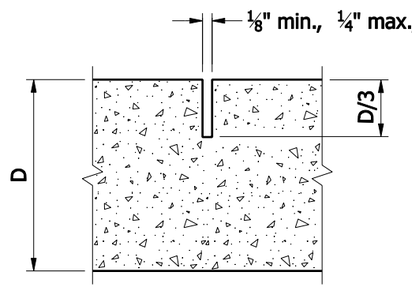

SECTION X-X

SAWED CONTRACTION JOINTS FOR CURB AND COMBINED CURB & GUTTER

INDIANA DEPARTMENT OF TRANSPORTATION

CONCRETE AND ASPHALT CURBS AND SAWED JOINTS

SEPTEMBER 2008

STANDARD DRAWING NO. E 605-CCSJ-01

RICHARD L. VanCLEAVE REGISTERED NO. 9750 STATE OF INDIANA PROFESSIONAL ENGINEER

DESIGN STANDARDS ENGINEER

/s/ Richard L. VanCleave 09/02/08
DESIGN STANDARDS ENGINEER DATE

/s/ Mark A. Miller 09/02/08
CHIEF HIGHWAY ENGINEER DATE

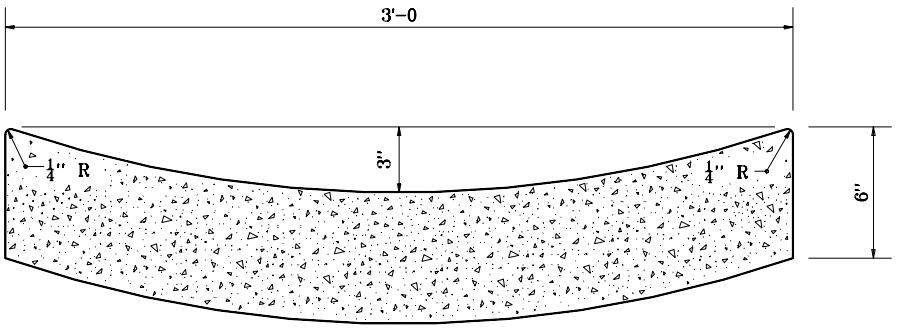

CONCRETE GUTTER

NOTES:

(1) For integral concrete curb

(2) For integral concrete curb Type C

(3) For integral concrete curb Type B

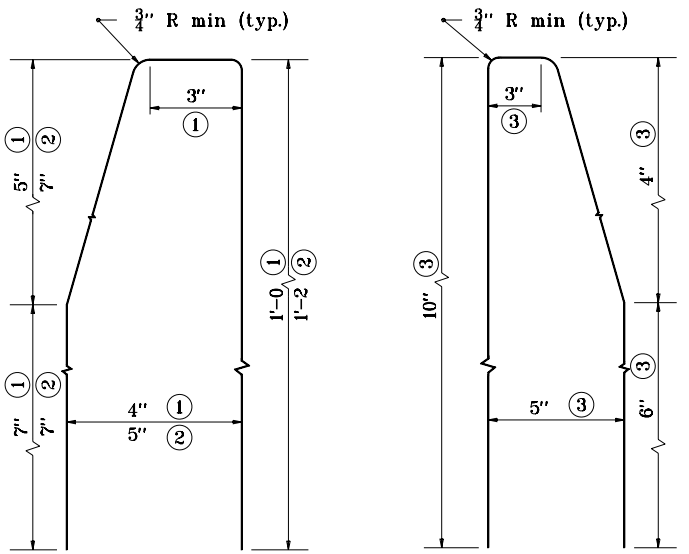

BENDING DIAGRAM FOR STIRRUPS

INDIANA DEPARTMENT OF TRANSPORTATION

CONCRETE GUTTER AND CURB STIRRUP BENDING DIAGRAM

APRIL 1995

STANDARD DRAWING NO. **E 605-CGCS-01**

ANTHONY L. UREMOVICH REGISTERED No. 18095 STATE OF INDIANA PROFESSIONAL ENGINEER

DESIGN STANDARDS ENGINEER

DETAILS PLACED IN THIS FORMAT	11-15-99
/s/ Anthony L. Uremovich DESIGN STANDARDS ENGINEER	11-15-99 DATE
/s/ Firooz Zandi CHIEF HIGHWAY ENGINEER	11-15-99 DATE
ORIGINALLY APPROVED	4-03-95

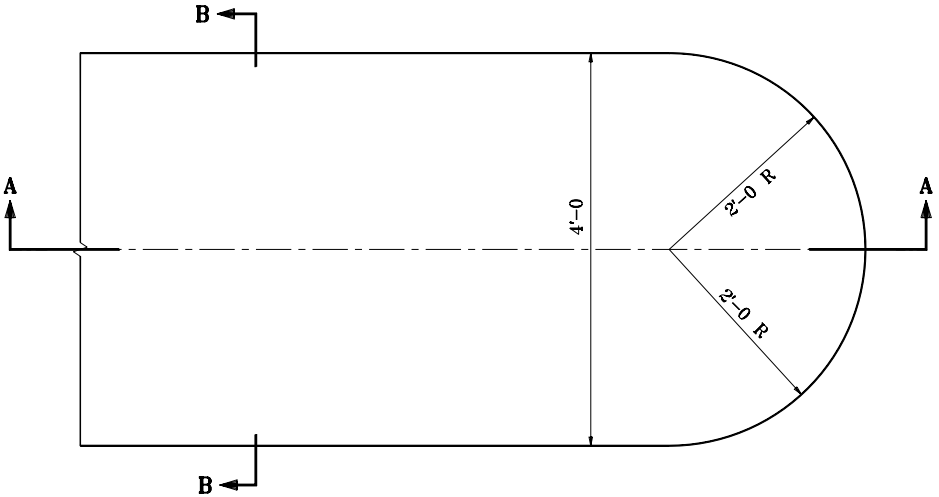

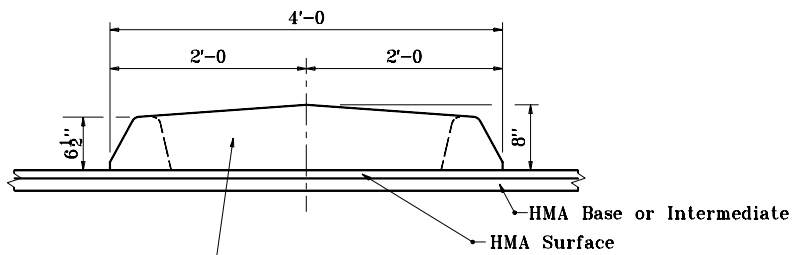

SECTION B–B

This section my be constructed as a monolithic unit or built up with an asphalt filler between two asphalt curbs.

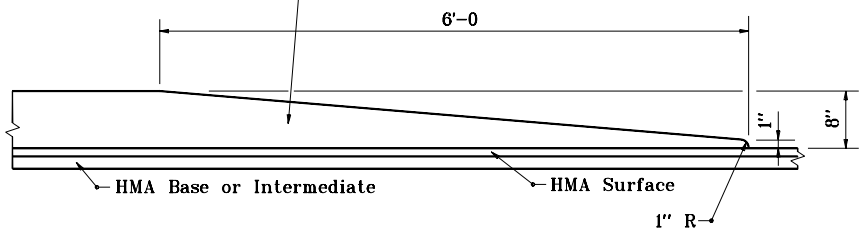

SECTION A–A

INDIANA DEPARTMENT OF TRANSPORTATION

HMA CENTER CURB TYPE A

JANUARY 2000

STANDARD DRAWING NO. **E 605–CNCB–01**

ANTHONY L. UREMOVICH REGISTERED No. 18095 STATE OF INDIANA PROFESSIONAL ENGINEER

DESIGN STANDARDS ENGINEER

/s/ Anthony L. Uremovich — DESIGN STANDARDS ENGINEER — 1–03–00 DATE

/s/ Firooz Zandi — CHIEF HIGHWAY ENGINEER — 1–03–00 DATE

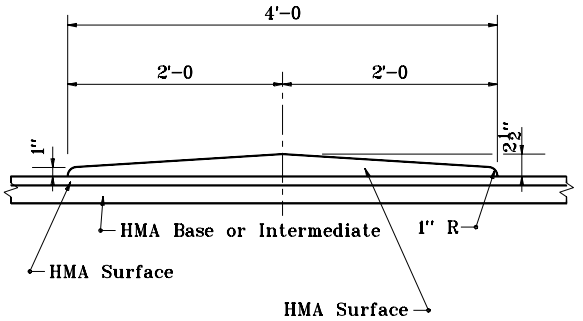

SECTION B–B

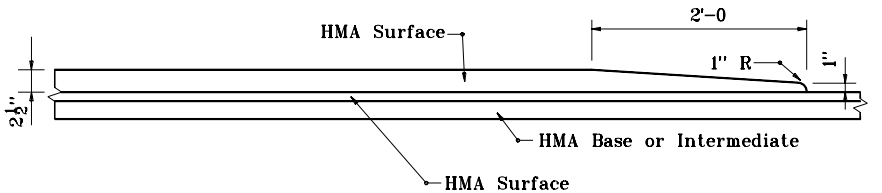

SECTION A–A

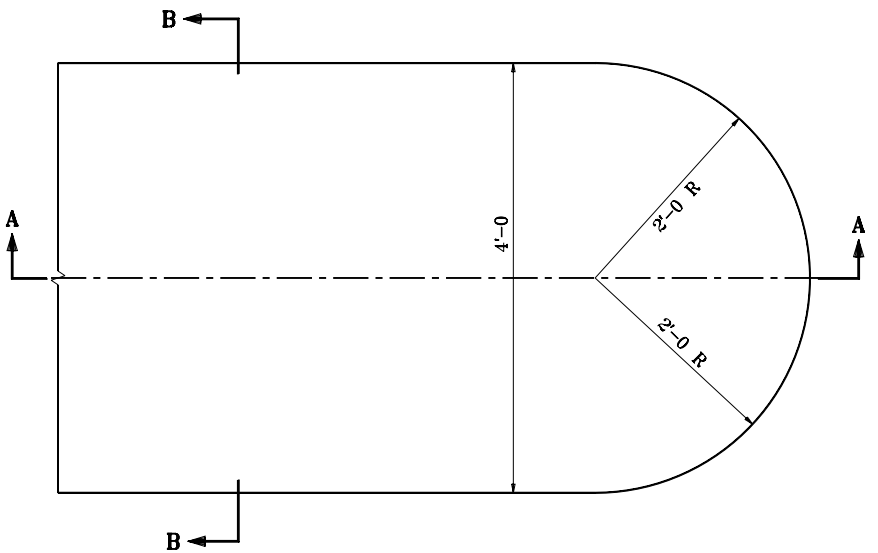

INDIANA DEPARTMENT OF TRANSPORTATION

HMA CENTER CURB TYPE B

JANUARY 2000

STANDARD DRAWING NO. E 605-CNCB-02

ANTHONY L. UREMOVICH REGISTERED No. 18095 STATE OF INDIANA PROFESSIONAL ENGINEER

DESIGN STANDARDS ENGINEER

/s/ Anthony L. Uremovich 1-03-00
DESIGN STANDARDS ENGINEER — DATE

/s/ Firooz Zandi 1-03-00
CHIEF HIGHWAY ENGINEER — DATE

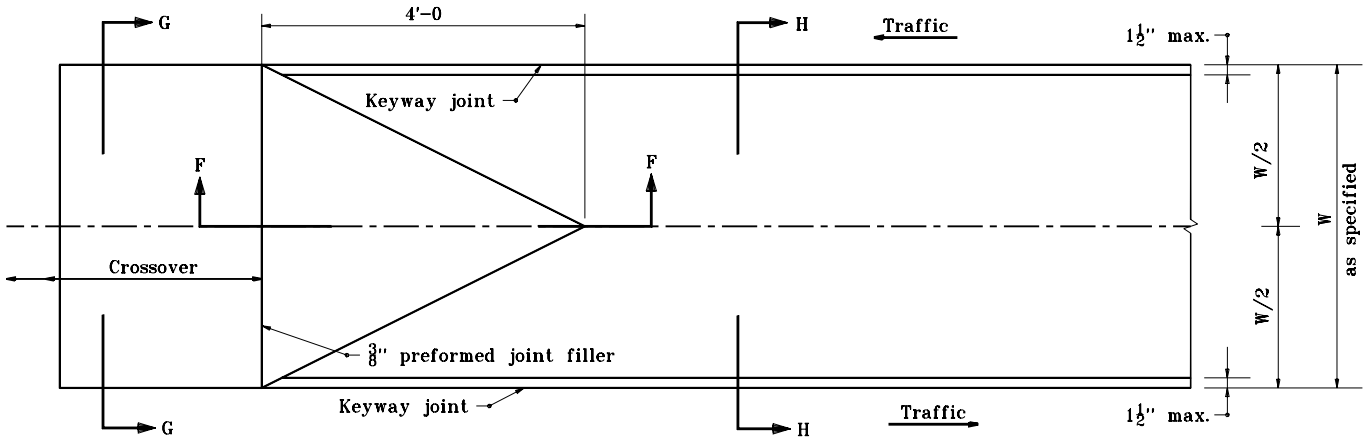

GENERAL NOTES

(1) For W greater than 4'-0 vary slope to hold 2" maximum height.

LEGEND

T = Normal pavement depth

W = Center curb width

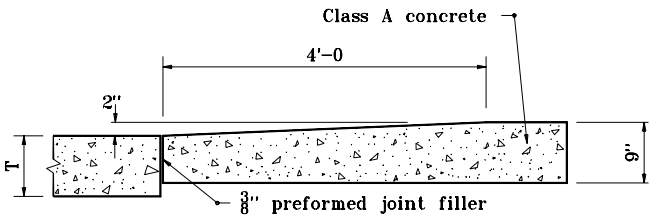

SECTION F-F

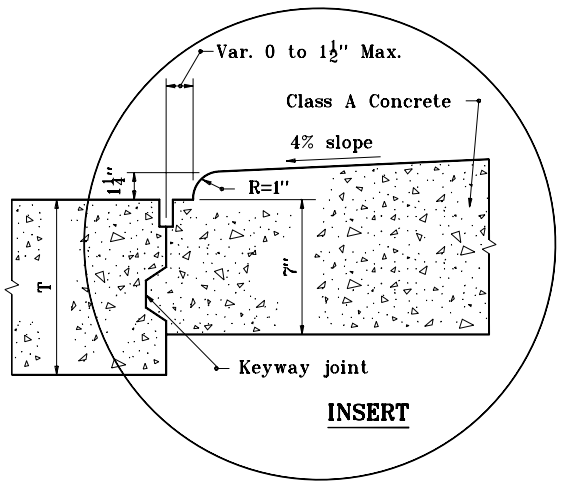

INSERT

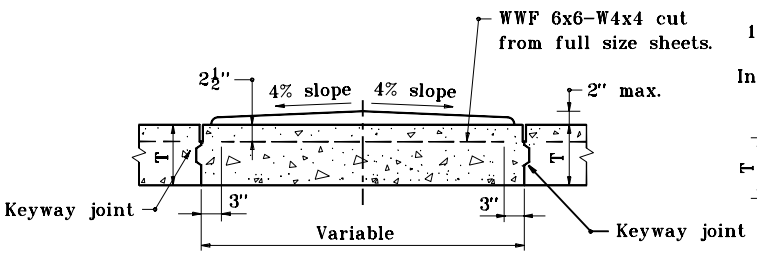

SECTION G-G

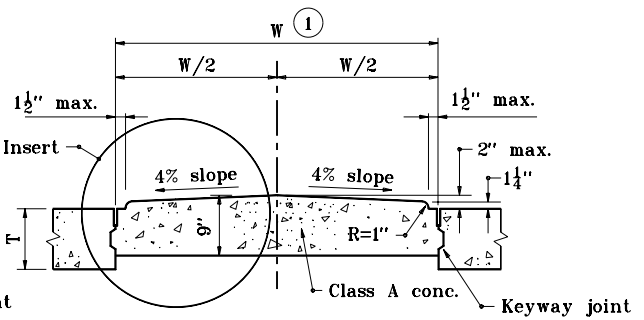

SECTION H-H

INDIANA DEPARTMENT OF TRANSPORTATION

CONCRETE CENTER CURB TYPE A

JANUARY 2001

STANDARD DRAWING NO. E 605-CNCC-01

ANTHONY L. UREMOVICH REGISTERED No. 18095 STATE OF INDIANA PROFESSIONAL ENGINEER

DESIGN STANDARDS ENGINEER

/s/ Anthony L. Uremovich 1-02-01
DESIGN STANDARDS ENGINEER — DATE

/s/ Firooz Zandi 1-02-01
CHIEF HIGHWAY ENGINEER — DATE

NOTES :

1. Curb radii and batter to conform to Type B curb, as shown on Standard Drawing E 605-CCSJ-01.

LEGEND

T = Normal pavement depth

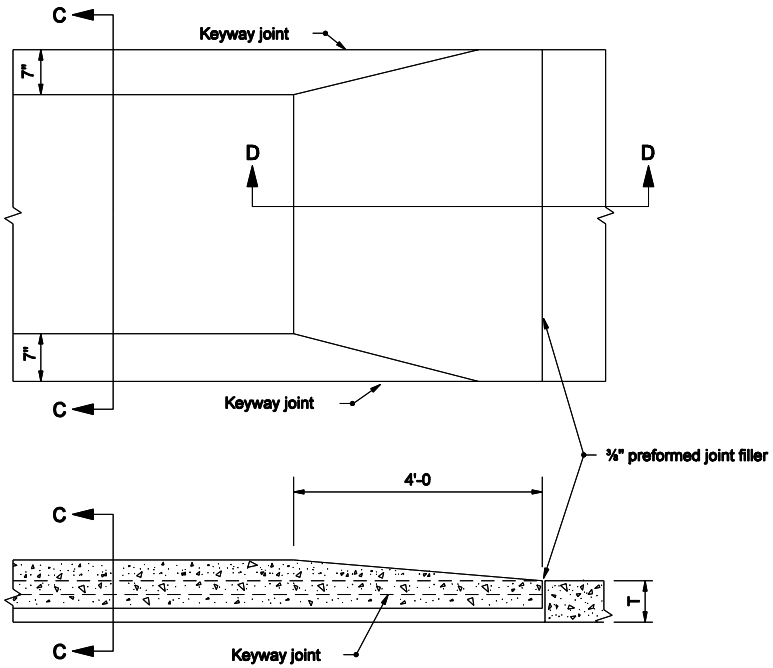

SECTION D-D

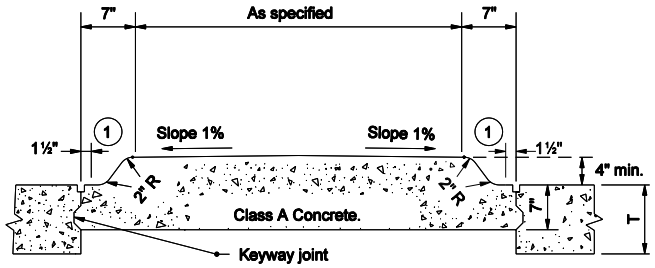

SECTION C-C

INDIANA DEPARTMENT OF TRANSPORTATION

CONCRETE CENTER CURB TYPE B

MARCH 2004

STANDARD DRAWING NO. E 605-CNCC-02

RICHARD L. VanCLEAVE REGISTERED No. 9750 STATE OF INDIANA PROFESSIONAL ENGINEER

DESIGN STANDARDS ENGINEER

/s/ Richard L. VanCleave 3/01/04
DESIGN STANDARDS ENGINEER DATE

/s/ Richard K. Smutzer 3/01/04
CHIEF HIGHWAY ENGINEER DATE

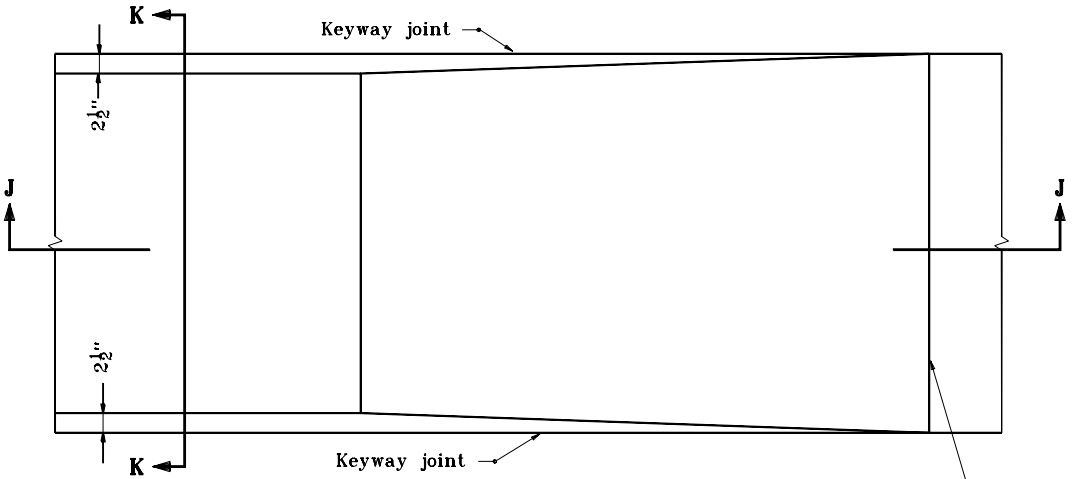

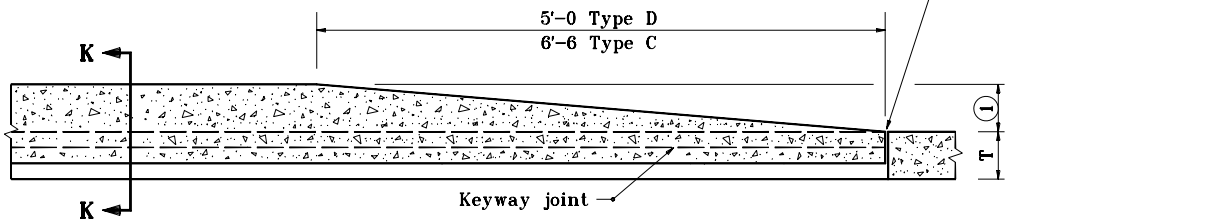

SECTION J-J

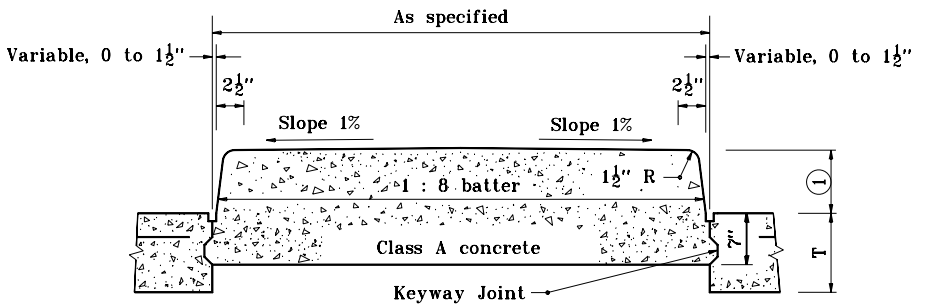

SECTION K-K

NOTES :

(1) 6" for concrete center curb, type D and 8" for concrete center curb, type C.

LEGEND

T = Normal pavement depth

INDIANA DEPARTMENT OF TRANSPORTATION

CONCRETE CENTER CURBS TYPE C & D

APRIL 1995

STANDARD DRAWING NO. **E 605-CNCC-03**

ANTHONY L. UREMOVICH REGISTERED No. 18095 STATE OF INDIANA PROFESSIONAL ENGINEER

DESIGN STANDARDS ENGINEER

DETAILS PLACED IN THIS FORMAT	11-15-99
/s/ Anthony L. Uremovich, DESIGN STANDARDS ENGINEER	11-15-99
/s/ Firooz Zandi, CHIEF HIGHWAY ENGINEER	11-15-99
ORIGINALLY APPROVED	4-03-95

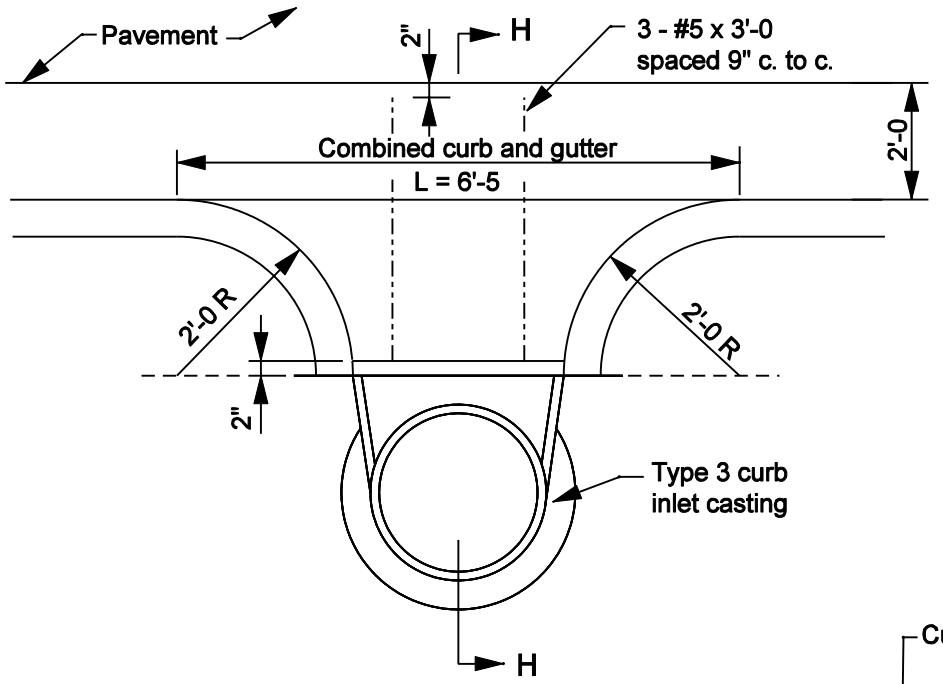

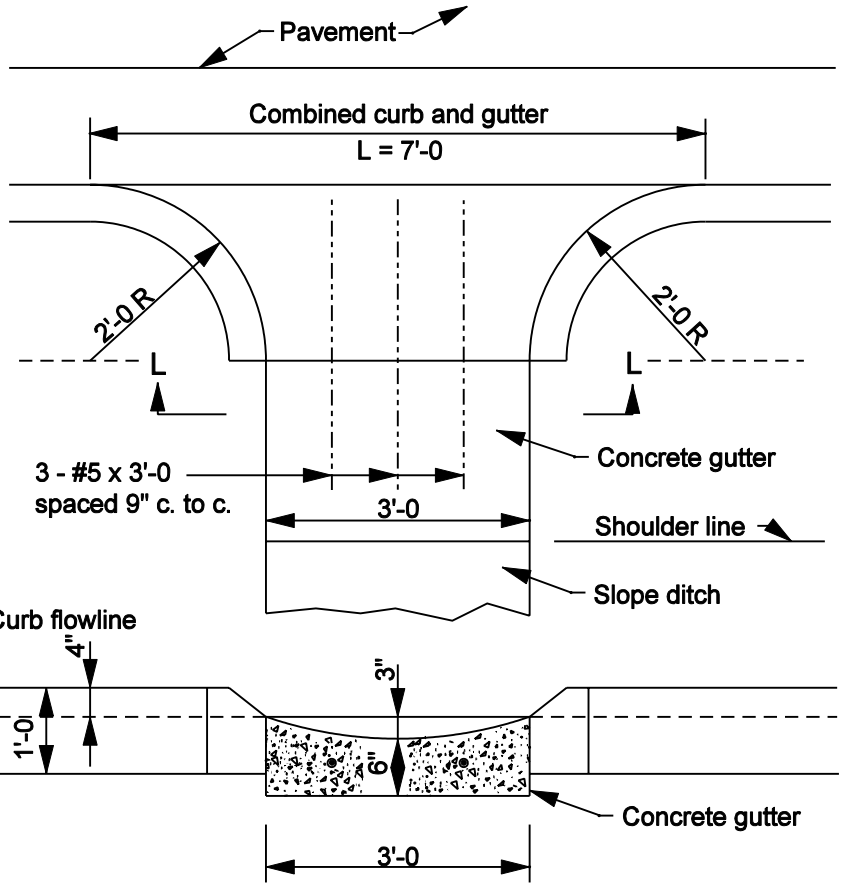

SECTION L-L

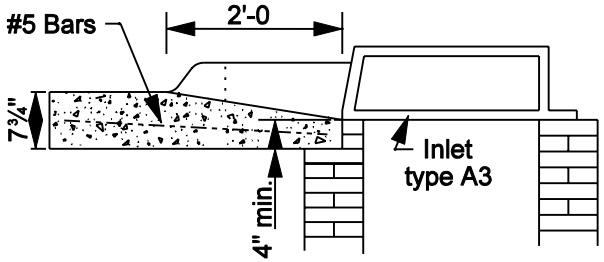

SECTION H-H

INDIANA DEPARTMENT OF TRANSPORTATION

COMBINED CURB AND GUTTER TURNOUTS

MARCH 2003

STANDARD DRAWING NO. E 605-CTCG-01

RICHARD L. VanCLEAVE REGISTERED No. 9750 STATE OF INDIANA PROFESSIONAL ENGINEER

DESIGN STANDARDS ENGINEER

/s/ Richard L. VanCleave 3-03-03
DESIGN STANDARDS ENGINEER DATE

/s/ Richard K. Smutzer 3-03-03
CHIEF HIGHWAY ENGINEER DATE

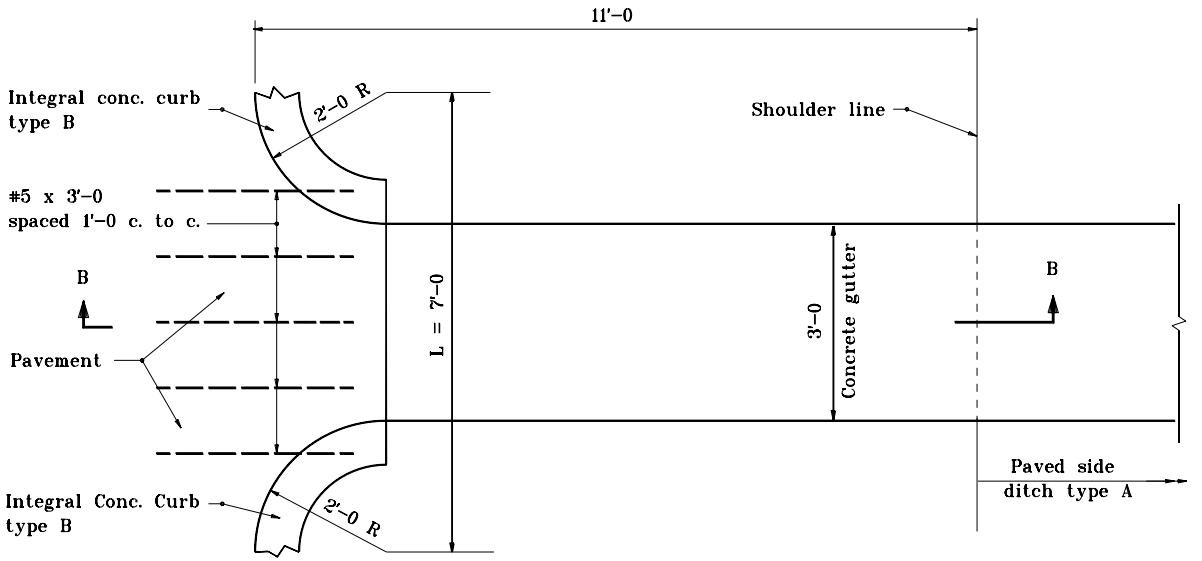

NOTES :

1. See Standard Drawing E 607-PSDT-01 for paved side ditch details.
2. See Standard Drawing E 501-CCPJ-08 for keyway joint details.

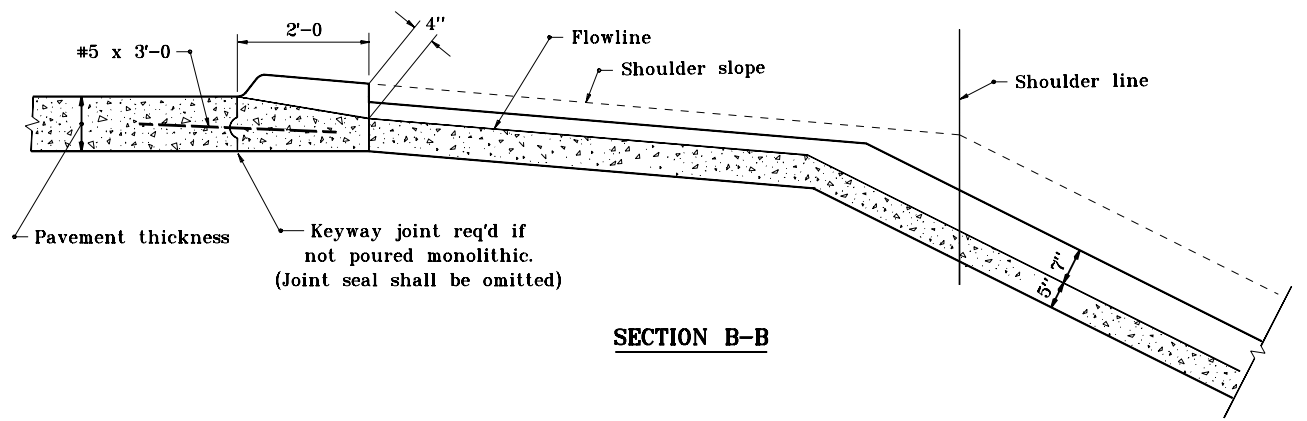

SECTION B-B

INDIANA DEPARTMENT OF TRANSPORTATION

CURB TURNOUT TO CONCRETE GUTTER & PAVED SIDE DITCH

SEPTEMBER 1997

STANDARD DRAWING NO. **E 605-CTCG-02**

ANTHONY L. UREMOVICH REGISTERED No. 18095 STATE OF INDIANA PROFESSIONAL ENGINEER

DESIGN STANDARDS ENGINEER

DETAILS PLACED IN THIS FORMAT	11-15-99
/s/ Anthony L. Uremovich DESIGN STANDARDS ENGINEER	11-15-99 DATE
/s/ Firooz Zandi CHIEF HIGHWAY ENGINEER	11-15-99 DATE
ORIGINALLY APPROVED	9-01-97

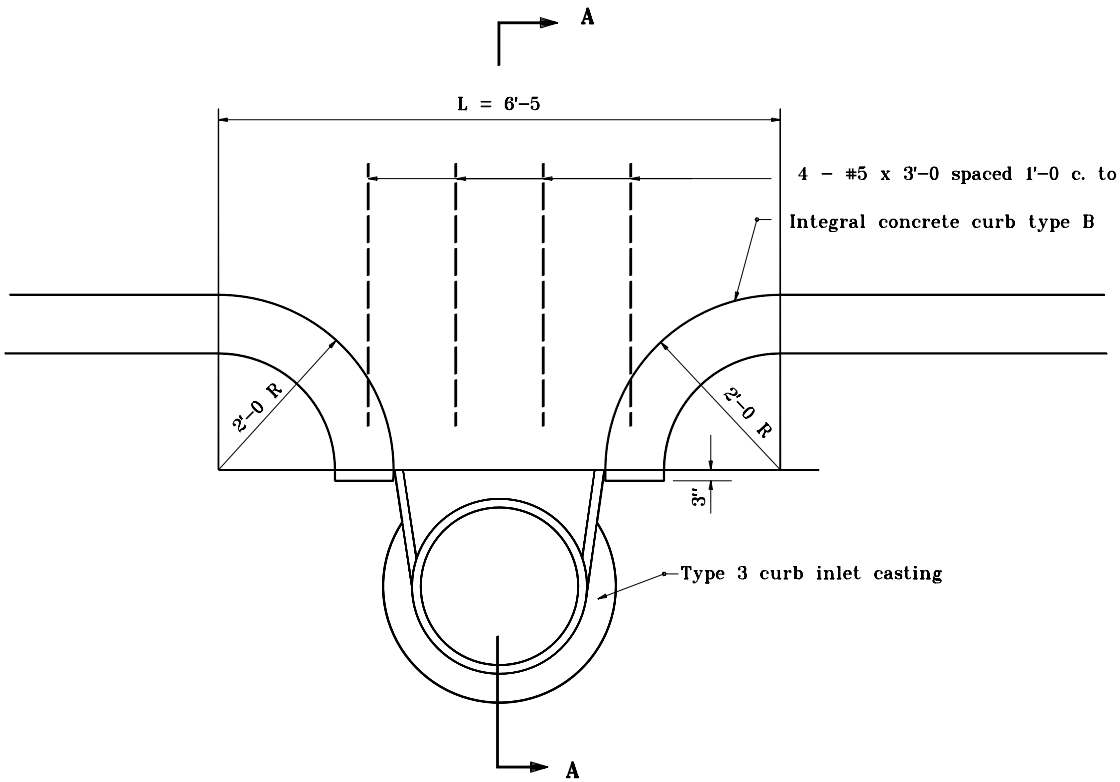

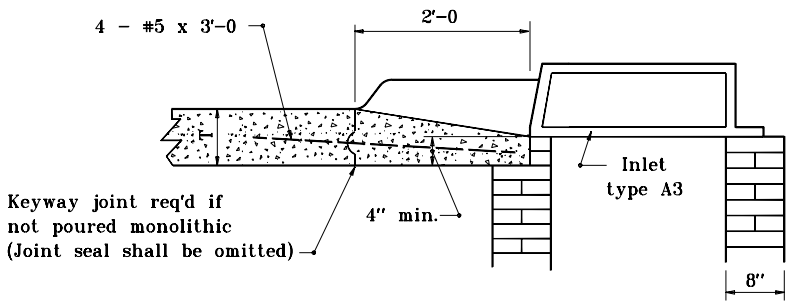

SECTION A-A

NOTES :

1. See Standard Drawing E 501-CCPJ-08 for keyway joint details.

INDIANA DEPARTMENT OF TRANSPORTATION

CURB TURNOUT TO A3 INLET

SEPTEMBER 1997

STANDARD DRAWING NO. **E 605-CTIN-01**

ANTHONY L. UREMOVICH REGISTERED No. 18095 STATE OF INDIANA PROFESSIONAL ENGINEER

DESIGN STANDARDS ENGINEER

DETAILS PLACED IN THIS FORMAT	11-15-99
/s/ Anthony L. Uremovich DESIGN STANDARDS ENGINEER	11-15-99 DATE
/s/ Firooz Zandi CHIEF HIGHWAY ENGINEER	11-15-99 DATE
ORIGINALLY APPROVED	9-01-97

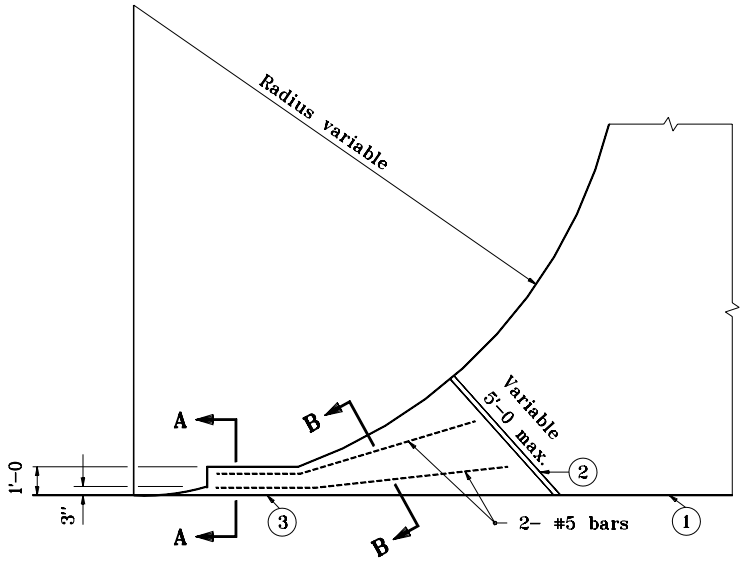

EAR CONSTRUCTION TYPE "A"

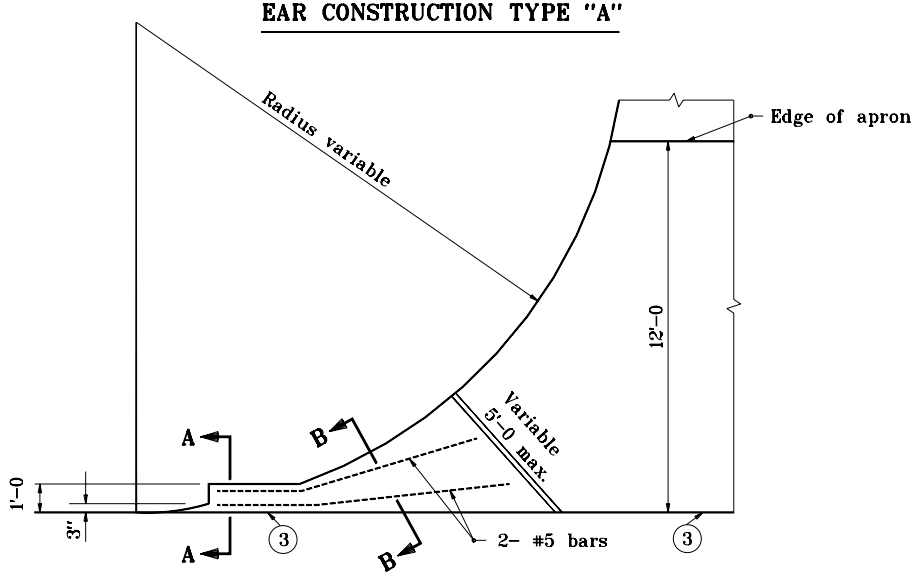

EAR CONSTRUCTION TYPE "A"
FOR PAVED APRON

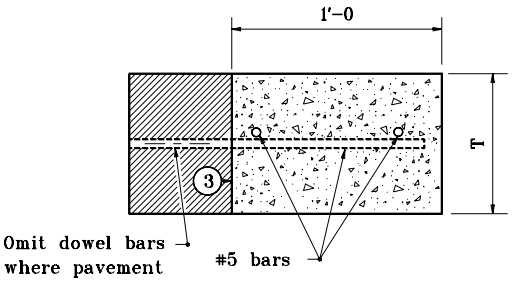

SECTION A-A

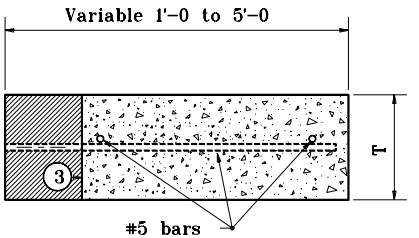

SECTION B-B

LEGEND

1. Keyway joint
2. 1" preformed joint filler
3. Longitudinal construction joint

T = Thickness of pavement

INDIANA DEPARTMENT OF TRANSPORTATION

EAR CONSTRUCTION
TYPE A

SEPTEMBER 1997

STANDARD DRAWING NO. **E 605-ERCN-01**

ANTHONY L. UREMOVICH REGISTERED No. 18095 STATE OF INDIANA PROFESSIONAL ENGINEER

DESIGN STANDARDS ENGINEER

DETAILS PLACED IN THIS FORMAT	11-15-99
/s/ Anthony L. Uremovich, DESIGN STANDARDS ENGINEER	11-15-99
/s/ Firooz Zandi, CHIEF HIGHWAY ENGINEER	11-15-99
ORIGINALLY APPROVED	9-01-97

LEGEND

(1) Keyway joint
(2) 1" preformed joint filler
(14) Integral concrete curb
(3) Longitudinal construction joint
T = Thickness of pavement

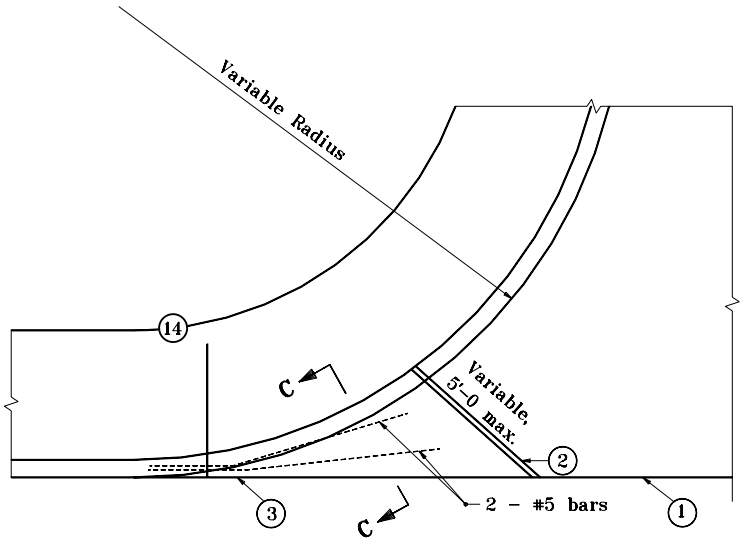

EAR CONSTRUCTION TYPE "B"

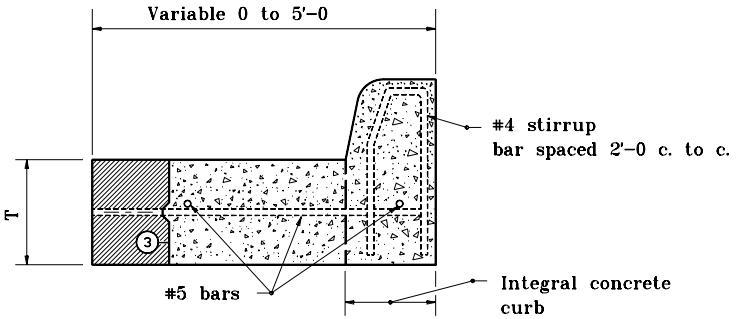

SECTION C-C

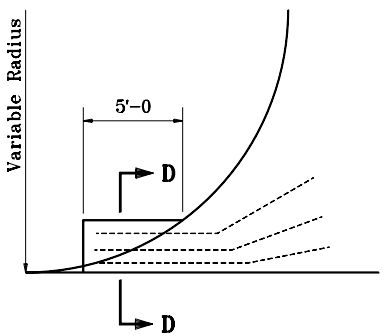

EAR CONSTRUCTION TYPE "C"

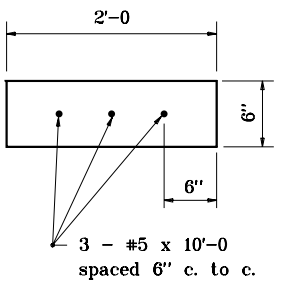

SECTION D-D

INDIANA DEPARTMENT OF TRANSPORTATION

EAR CONSTRUCTION TYPE B AND C

JANUARY 1998

STANDARD DRAWING NO. E 605-ERCN-02

ANTHONY L. UREMOVICH REGISTERED No. 18095 STATE OF INDIANA PROFESSIONAL ENGINEER

DESIGN STANDARDS ENGINEER

DETAILS PLACED IN THIS FORMAT	11-15-99
/s/ Anthony L. Uremovich, DESIGN STANDARDS ENGINEER	11-15-99
/s/ Firooz Zandi, CHIEF HIGHWAY ENGINEER	11-15-99
ORIGINALLY APPROVED	1-02-98

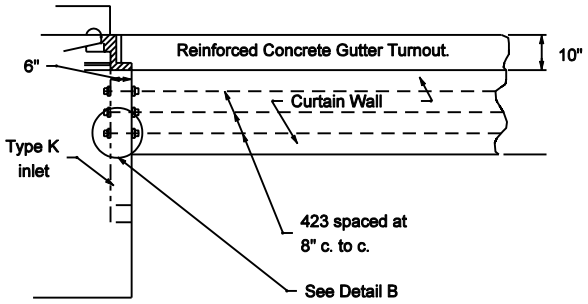

DETAIL A

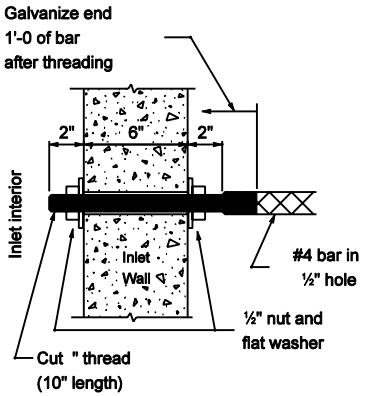

DETAIL B

GENERAL NOTES

1. For location of details and sections see Standard Drawing E 605-GTRC-03.

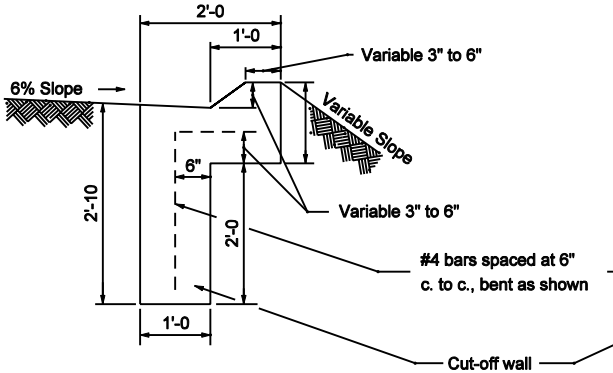

SECTION A-A

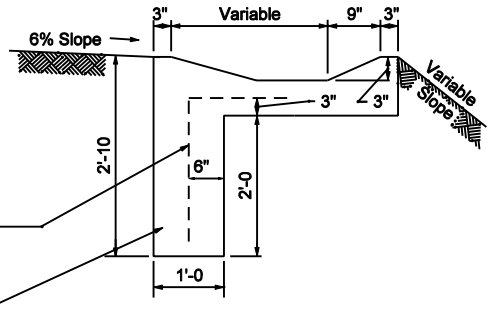

SECTION B-B

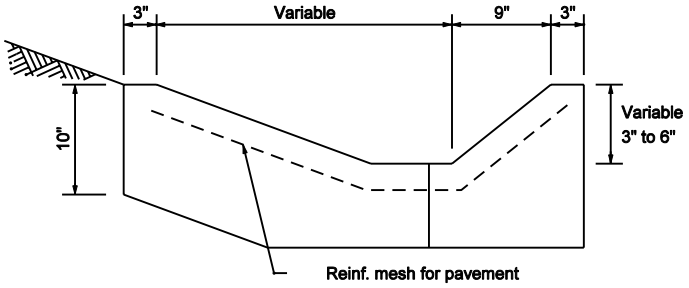

SECTION C-C

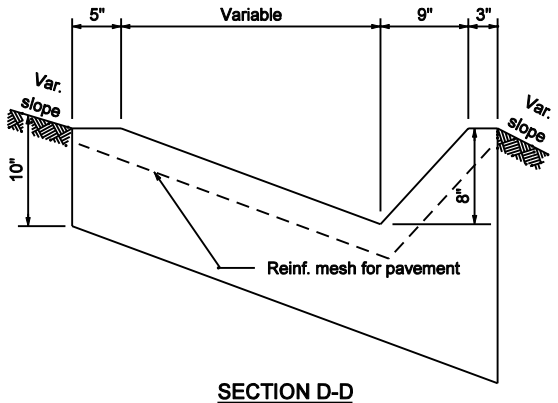

SECTION D-D

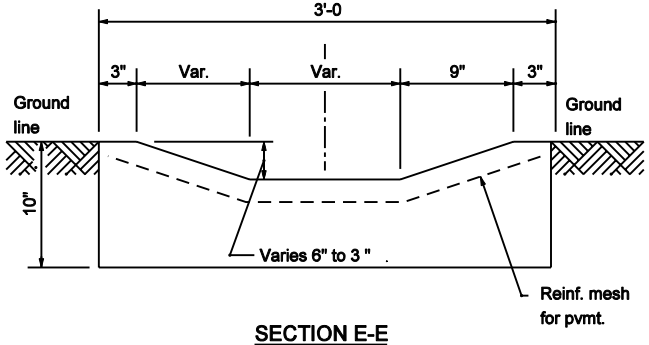

SECTION E-E

INDIANA DEPARTMENT OF TRANSPORTATION

REINFORCED CONCRETE GUTTER TURNOUT

MARCH 2003

STANDARD DRAWING NO. E 605-GTRC-01

RICHARD L. VanCLEAVE REGISTERED No. 9750 STATE OF INDIANA PROFESSIONAL ENGINEER

DESIGN STANDARDS ENGINEER

/s/ Richard L. VanCleave 3-03-03
DESIGN STANDARDS ENGINEER DATE

/s/ Richard K. Smutzer 3-03-03
CHIEF HIGHWAY ENGINEER DATE

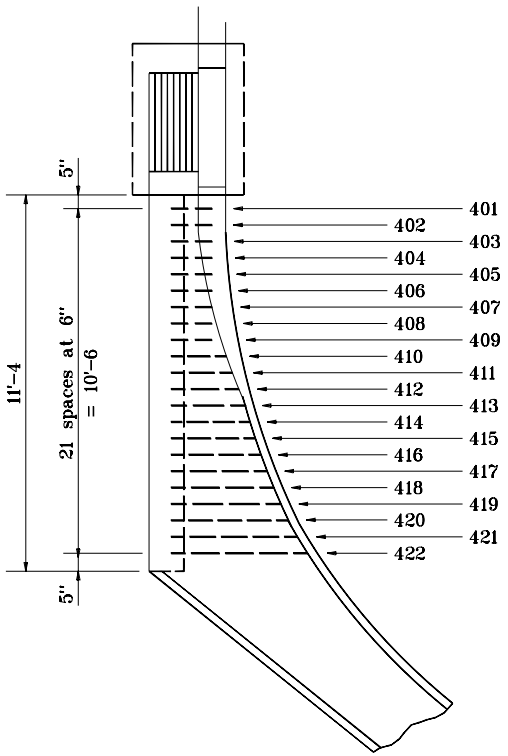

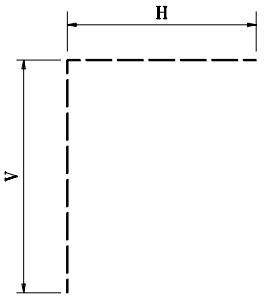

#4 BAR

MK	QTY.	SIZE	BAR LENGTHS		
			V	H	TOTAL
401	1	#4	2'-0	1'-3	3'-3
402				1'-4	3'-4
403				1'-5	3'-5
404				1'-6	3'-6
405				1'-7	3'-7
406				1'-8	3'-8
407				1'-9	3'-9
408				1'-10	3'-10
409				1'-11	3'-11
410				2'-0	4'-0
411				2'-2	4'-2
412				2'-4	4'-4
413				2'-6	4'-6
414				2'-8	4'-8
415				2'-10	4'-10
416				3'-0	5'-0
417				3'-4	5'-4
418				3'-6	5'-8
419				3'-11	5'-11
420				4'-2	6'-2
421				4'-6	6'-6
422			2'-0	4'-10	6'-10
423	3	#4	1'-3	3'-0	4'-3

MK 423 bars to be threaded, galvanized, and installed as shown in Detail B on Standard Drawing E 605-GTRC-01.

REINFORCING PLAN CONCRETE GUTTER TURNOUT

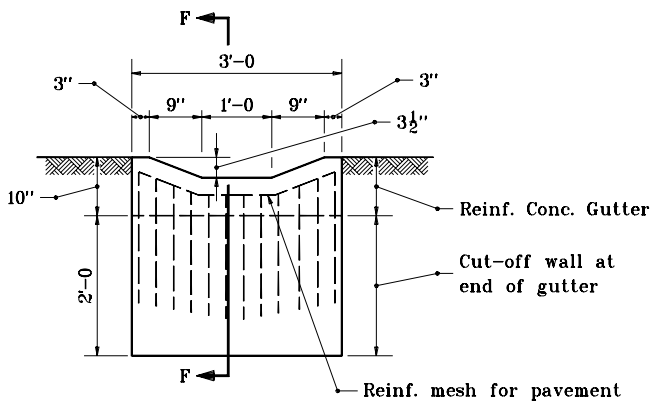

SECTION G-G

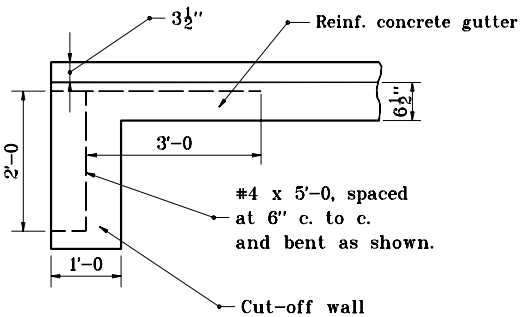

SECTION F-F

INDIANA DEPARTMENT OF TRANSPORTATION

REINFORCED CONCRETE GUTTER TURNOUT

SEPTEMBER 1997

STANDARD DRAWING NO. E 605-GTRC-02

ANTHONY L. UREMOVICH REGISTERED No. 18095 STATE OF INDIANA PROFESSIONAL ENGINEER

DESIGN STANDARDS ENGINEER

DETAILS PLACED IN THIS FORMAT 11-15-99

/s/ Anthony L. Uremovich 11-15-99
DESIGN STANDARDS ENGINEER DATE

/s/ Firooz Zandi 11-15-99
CHIEF HIGHWAY ENGINEER DATE

ORIGINALLY APPROVED 9-01-97

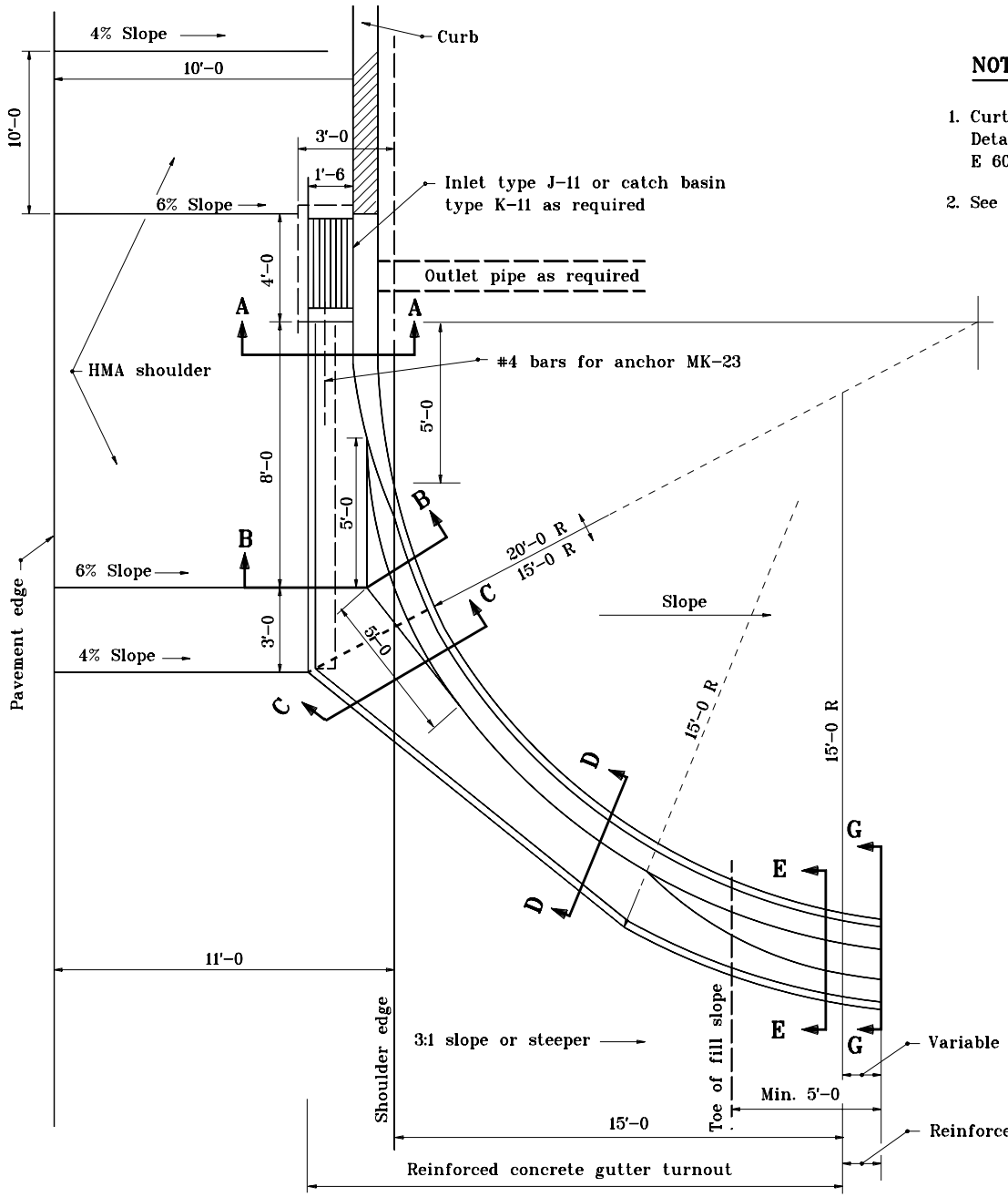

NOTES :

1. Curtain walls and #4 bars for anchor MK-23 shown in Detail A, Detail B, Section A-A, and Section B-B on Standard Drawing E 605-GTRC-01.
2. See Standard Drawing E 605-GTRC-02 for sections F-F and G-G.

INDIANA DEPARTMENT OF TRANSPORTATION

REINFORCED CONCRETE GUTTER TURNOUT

JANUARY 1999

STANDARD DRAWING NO. **E 605-GTRC-03**

ANTHONY L. UREMOVICH REGISTERED No. 18095 STATE OF INDIANA PROFESSIONAL ENGINEER

DESIGN STANDARDS ENGINEER

DETAILS PLACED IN THIS FORMAT	11-15-99
/s/ Anthony L. Uremovich, DESIGN STANDARDS ENGINEER	11-15-99
/s/ Firooz Zandi, CHIEF HIGHWAY ENGINEER	11-15-99
ORIGINALLY APPROVED	1-04-99

LEGEND

(1) Longitudinal joint

(3) Longitudinal construction joint

T = Nominal pavement thickness

Curve data variable
except tangent length = 50'–0

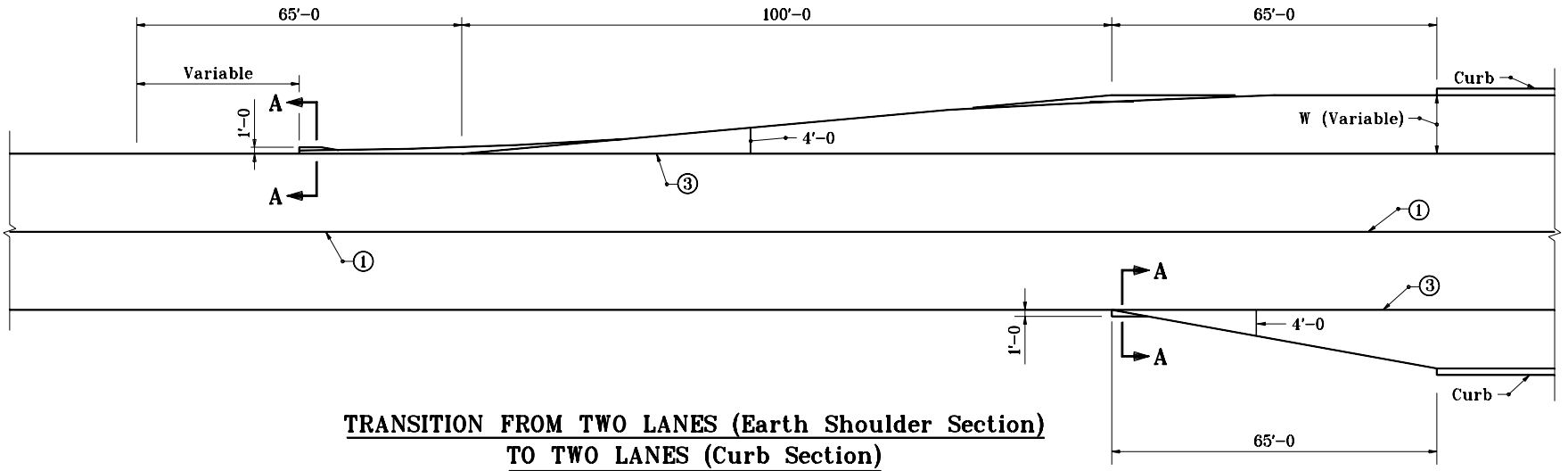

TRANSITION FROM TWO LANES (Earth Shoulder Section) TO TWO LANES (Curb Section)

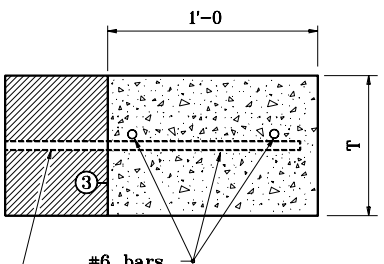

Omit dowel bars where pavement is in place.

SECTION A–A

INDIANA DEPARTMENT OF TRANSPORTATION

TRANSITION OF EARTH SHOULDER TO CURB SECTION

SEPTEMBER 1997

STANDARD DRAWING NO. **E 605–TSCS–01**

ANTHONY L. UREMOVICH REGISTERED No. 18095 STATE OF INDIANA PROFESSIONAL ENGINEER

DESIGN STANDARDS ENGINEER

DETAILS PLACED IN THIS FORMAT	11-15-99
/s/ Anthony L. Uremovich	11-15-99
DESIGN STANDARDS ENGINEER	DATE
/s/ Firooz Zandi	11-15-99
CHIEF HIGHWAY ENGINEER	DATE
ORIGINALLY APPROVED	9-01-97

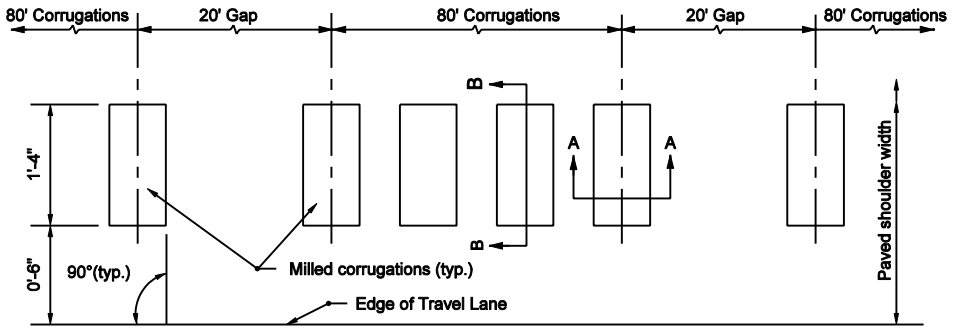

INTERMITTENT INSTALLATION
PLAN VIEW

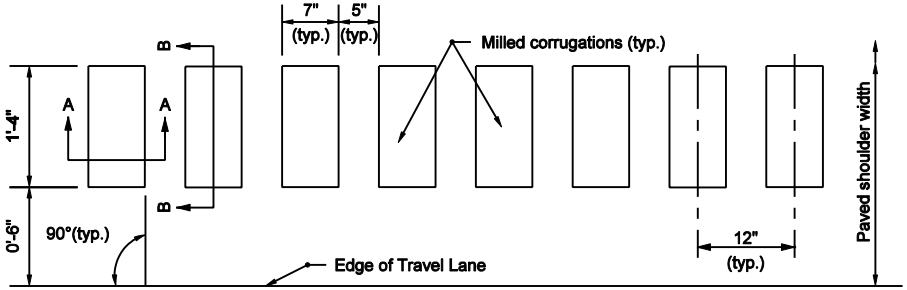

CONTINUOUS INSTALLATION
PLAN VIEW

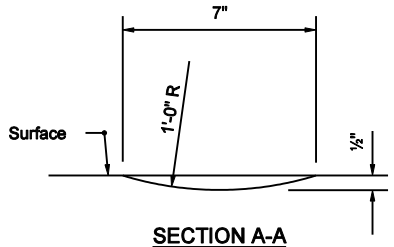

SECTION A-A

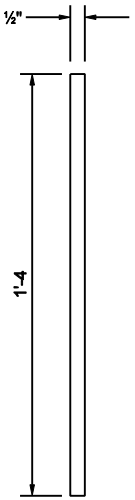

SECTION B-B

NOTES

1. Continuous corrugation installation shall be used on Interstates and intermittent installation shall be used on all other facilities.

2. Refer to E 606-SHCG-02 for corrugation instructions for HMA shoulders adjacent to a widened PCCP outside lane.

INDIANA DEPARTMENT OF TRANSPORTATION

MILLED HMA SHOULDER CORRUGATIONS

MARCH 2003

STANDARD DRAWING NO. E 606-SHCG-01

RICHARD L. VanCLEAVE REGISTERED No. 9750 STATE OF INDIANA PROFESSIONAL ENGINEER

DESIGN STANDARDS ENGINEER

/s/ Richard L. VanCleave 3-03-03
DESIGN STANDARDS ENGINEER DATE

/s/ Richard K. Smutzer 3-03-03
CHIEF HIGHWAY ENGINEER DATE

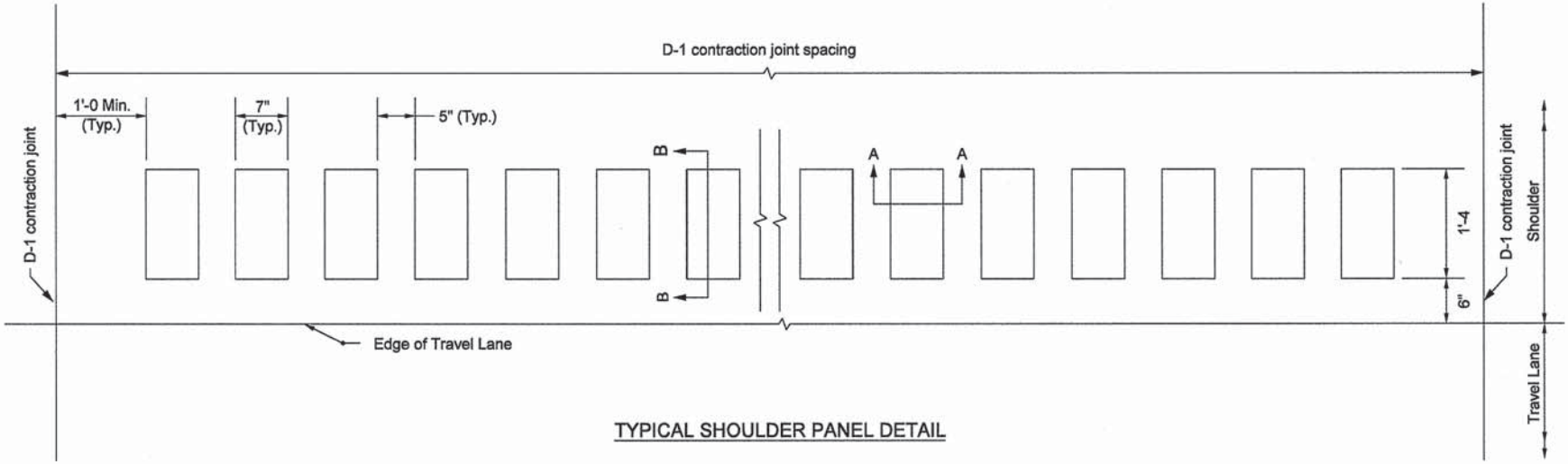

TYPICAL SHOULDER PANEL DETAIL

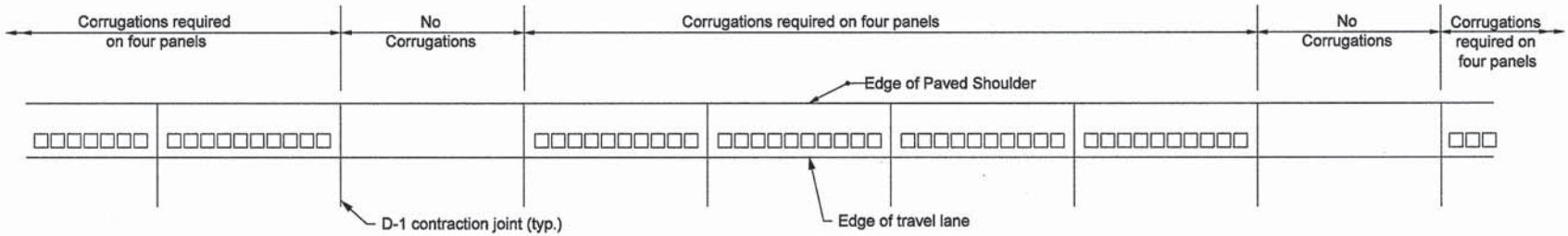

INTERMITTENT INSTALLATION DETAIL

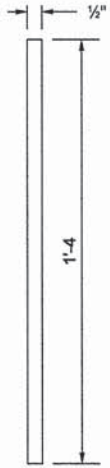

SECTION B-B

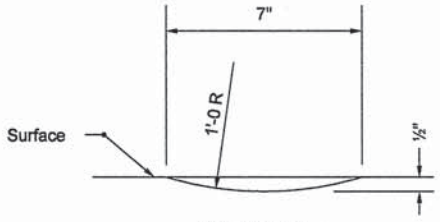

SECTION A-A

NOTES

1. Continuous corrugations shall be required on every PCC shoulder panel on Interstates. Intermittent corrgation tions shall be required for all other facilities
2. On facilities with a widened outside PCCP lane, the corrugations shall be installed on the portion of the PCCP located outside the edge of travel lane and in accordance with this sheet.

INDIANA DEPARTMENT OF TRANSPORTATION

MILLED PCCP SHOULDER CORRUGATIONS

MARCH 2003

STANDARD DRAWING NO. E 606-SHCG-02

RICHARD L. VANCLEAVE REGISTERED No. 9750 STATE OF INDIANA PROFESSIONAL ENGINEER

DESIGN STANDARDS ENGINEER

3-3-03
DESIGN STANDARDS ENGINEER DATE

3-3-03
CHIEF HIGHWAY ENGINEER DATE

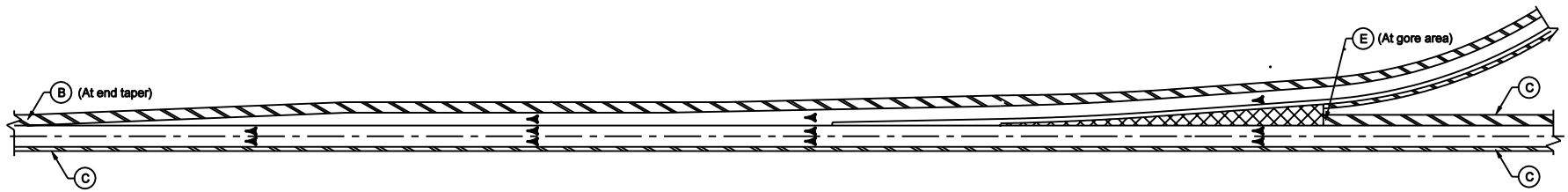

ENTRANCE RAMP

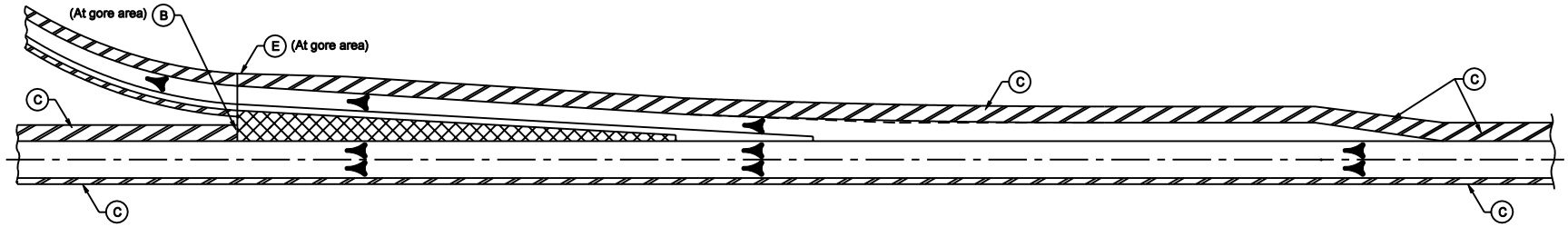

EXIT RAMP

LEGEND

- (B) Begin Shoulder Corrugations
- (C) Shoulder Corrugations
- (E) End Shoulder Corrugations
- Gore Area
- Shoulder
- Direction of Traffic

INDIANA DEPARTMENT OF TRANSPORTATION

SHOULDER CORRUGATION LIMITS

MARCH 2003

STANDARD DRAWING NO. E 606-SHCG-03

RICHARD L. VanCLEAVE REGISTERED No. 9750 STATE OF INDIANA PROFESSIONAL ENGINEER

DESIGN STANDARDS ENGINEER

/s/ Richard L. VanCleave 3-03-03
DESIGN STANDARDS ENGINEER DATE

/s/ Richard K. Smutzer 3-03-03
CHIEF HIGHWAY ENGINEER DATE

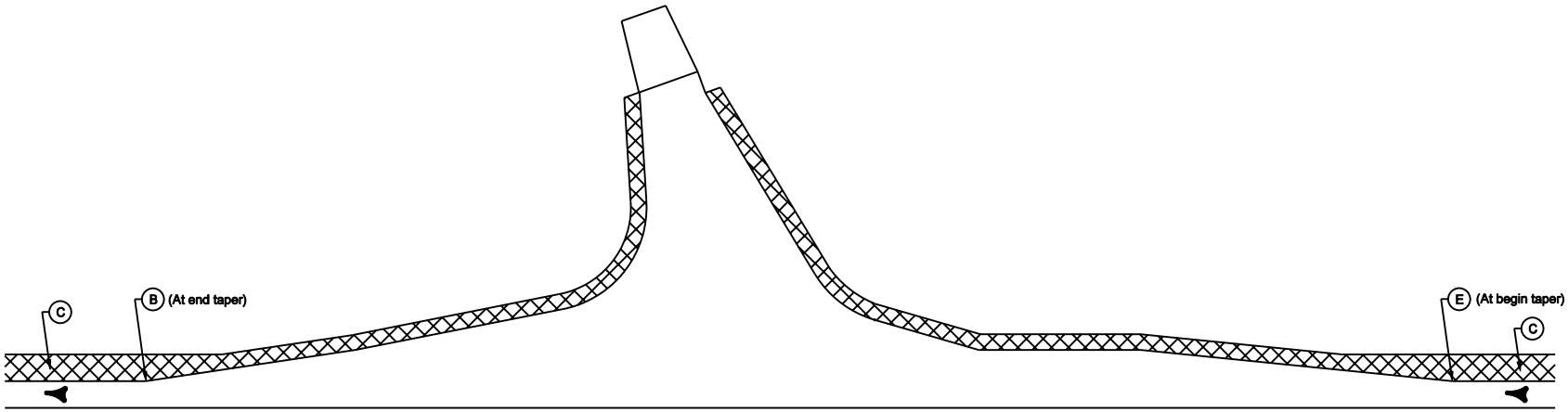

APPROACH WITH TURN LANE

LEGEND

- (B) Begin Shoulder Corrugations
- (C) Shoulder Corrugations
- (E) End Shoulder Corrugations
- Shoulder
- Direction of Traffic

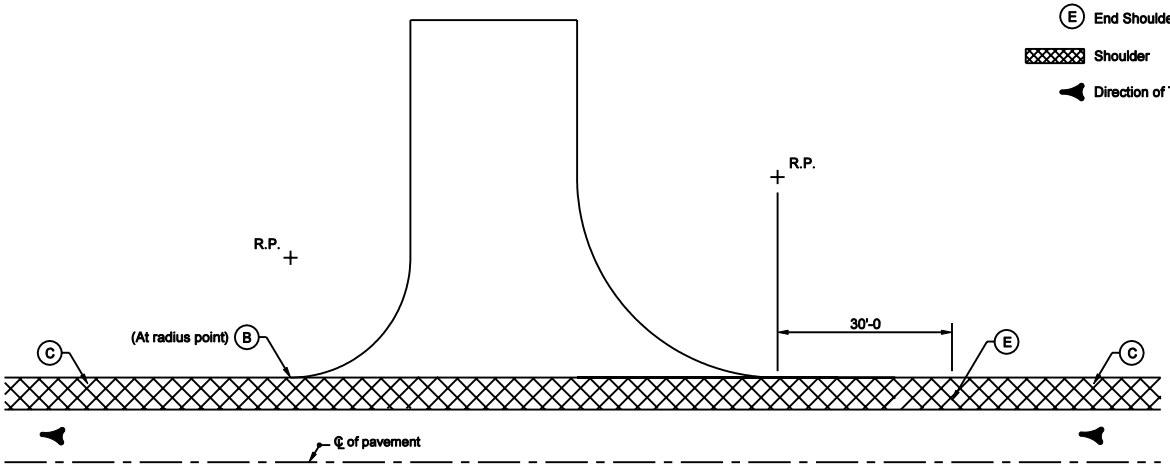

APPROACH WITHOUT TURN LANE

INDIANA DEPARTMENT OF TRANSPORTATION

SHOULDER CORRUGATION LIMITS

MARCH 2003

STANDARD DRAWING NO. E 606-SHCG-04

RICHARD L. VANCLEAVE REGISTERED No. 9750 STATE OF INDIANA PROFESSIONAL ENGINEER

DESIGN STANDARDS ENGINEER

/s/ Richard L. VanCleave 3-03-03
DESIGN STANDARDS ENGINEER DATE

/s/ Richard K. Smutzer 3-03-03
CHIEF HIGHWAY ENGINEER DATE

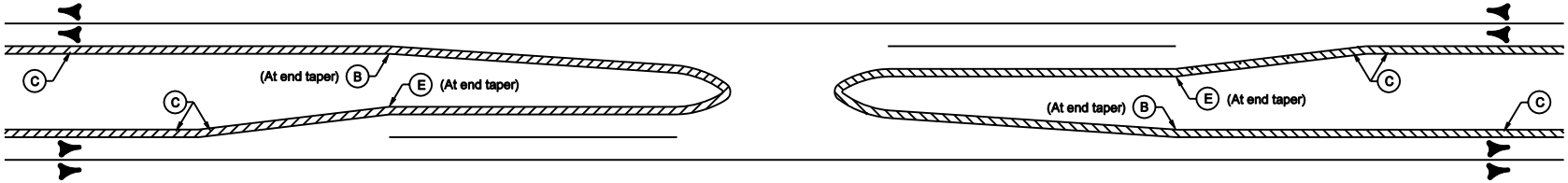

MEDIAN CROSSOVER / LEFT TURN LANE

LEGEND

- (B) Begin Shoulder Corrugations
- (C) Shoulder Corrugations
- (E) End Shoulder Corrugations
- Shoulder
- Direction of Traffic

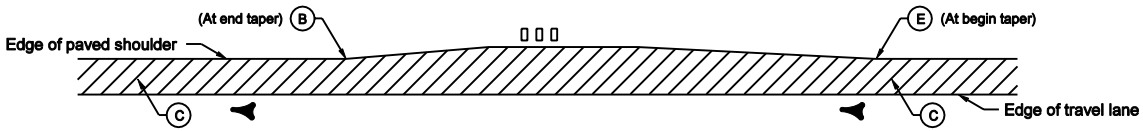

TYPICAL MAILBOX APPROACH

INDIANA DEPARTMENT OF TRANSPORTATION

SHOULDER CORRUGATION LIMITS

MARCH 2003

STANDARD DRAWING NO. E 606-SHCG-05

RICHARD L. VanCLEAVE REGISTERED No. 9750 STATE OF INDIANA PROFESSIONAL ENGINEER

DESIGN STANDARDS ENGINEER

/s/ Richard L. VanCleave 3-03-03
DESIGN STANDARDS ENGINEER DATE

/s/ Richard K. Smutzer 3-03-03
CHIEF HIGHWAY ENGINEER DATE

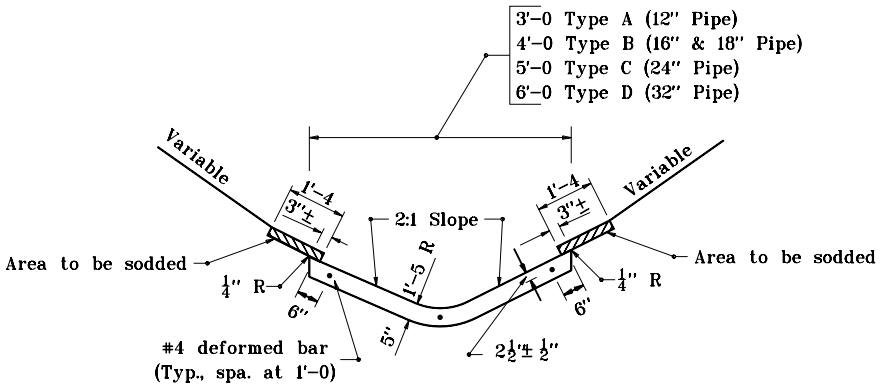

ELEVATION VIEW

PAVED SIDE DITCH TYPES A THROUGH D

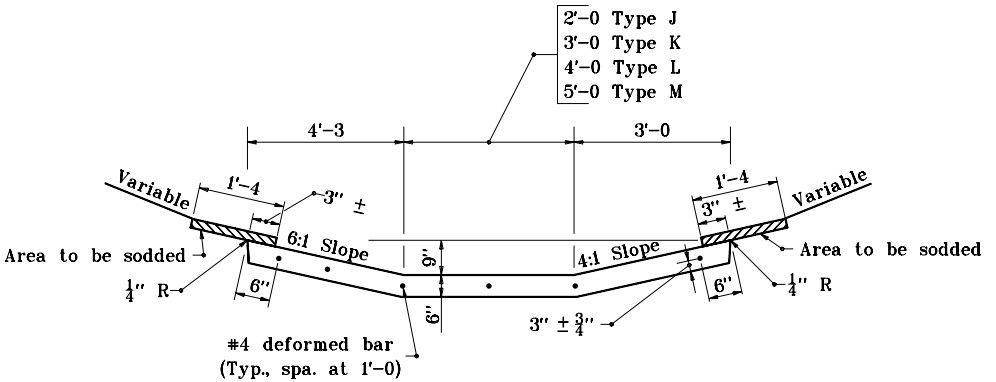

ELEVATION VIEW

PAVED SIDE DITCH TYPES J THROUGH M

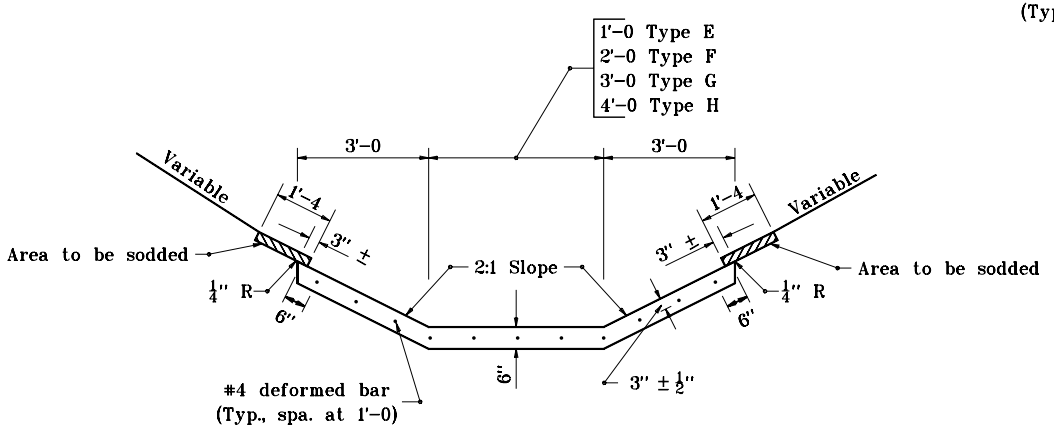

ELEVATION VIEW

PAVED SIDE DITCH TYPES E THROUGH H

INDIANA DEPARTMENT OF TRANSPORTATION

PAVED SIDE DITCH ELEVATIONS

SEPTEMBER 2000

STANDARD DRAWING NO. **E 607–PSDT–01**

ANTHONY L. UREMOVICH REGISTERED No. 18095 STATE OF INDIANA PROFESSIONAL ENGINEER

DESIGN STANDARDS ENGINEER

/s/ Anthony L. Uremovich 9–01–00
DESIGN STANDARDS ENGINEER — DATE

/s/ Firooz Zandi 9–01–00
CHIEF HIGHWAY ENGINEER — DATE

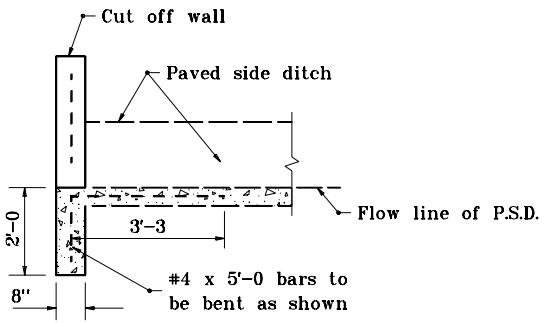

SECTION A-A

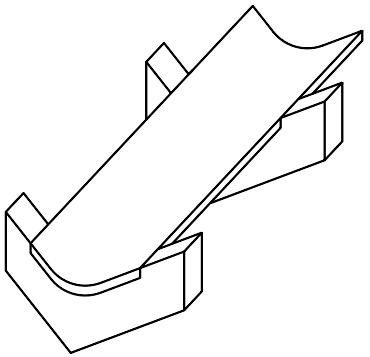

ISOMETRIC VIEW

PAVED SIDE DITCH TYPE A THROUGH D

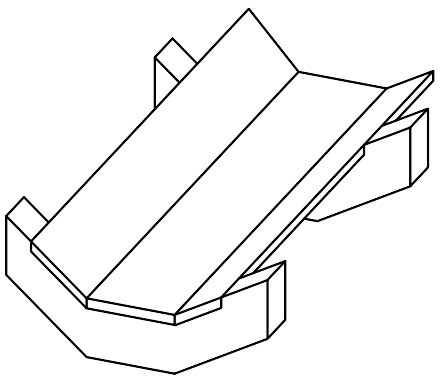

ISOMETRIC VIEW

PAVED SIDE DITCH TYPES J THROUGH M

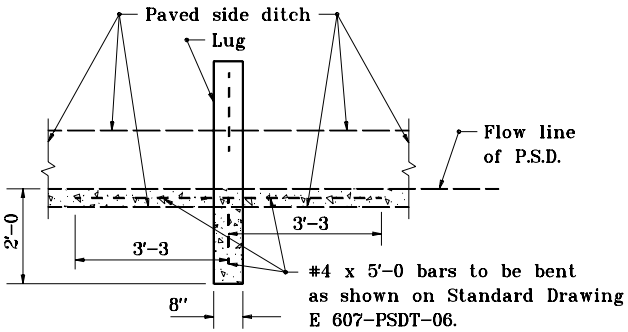

SECTION B-B

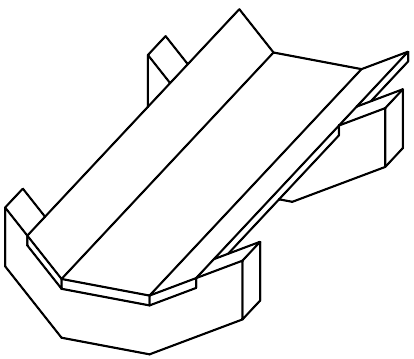

ISOMETRIC VIEW

PAVED SIDE DITCH TYPE E THROUGH H

INDIANA DEPARTMENT OF TRANSPORTATION

PAVED SIDE DITCH SECTIONS AND ISOMETRICS

SEPTEMBER 1997

STANDARD DRAWING NO. **E 607-PSDT-02**

ANTHONY L. UREMOVICH REGISTERED No. 18095 STATE OF INDIANA PROFESSIONAL ENGINEER

DESIGN STANDARDS ENGINEER

DETAILS PLACED IN THIS FORMAT 11-15-99

/s/ Anthony L. Uremovich 11-15-99
DESIGN STANDARDS ENGINEER DATE

/s/ Firooz Zandi 11-15-99
CHIEF HIGHWAY ENGINEER DATE

ORIGINALLY APPROVED 9-01-97

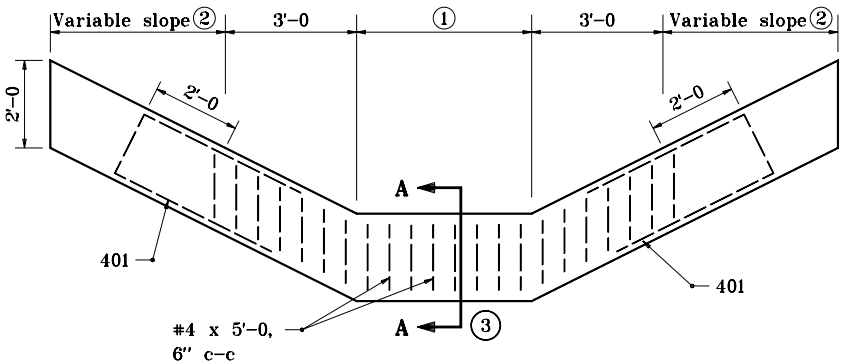

ELEVATION VIEW

CUT-OFF WALL FOR PAVED SIDE DITCH TYPES E THROUGH H

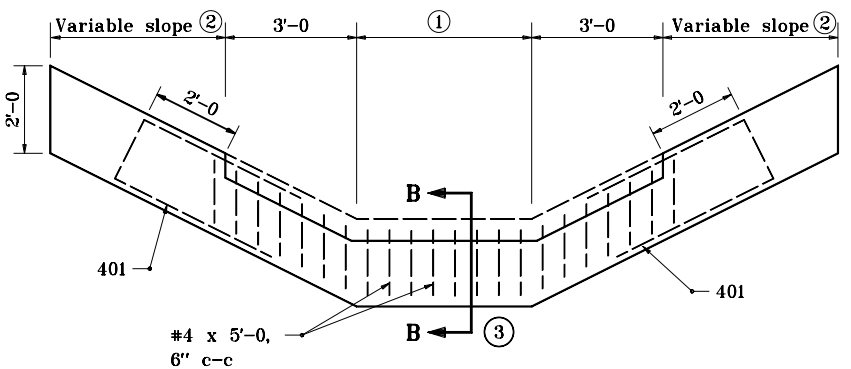

ELEVATION VIEW

LUG FOR PAVED SIDE DITCH TYPES E THROUGH H

GENERAL NOTES

① 1'-0 For Type E
2'-0 For Type F
3'-0 For Type G
4'-0 For Type H

② 3'-0 For Type E & F
4'-0 For Type G & H

③ See Standard Drawing E 607-PSDT-02 for Sections A-A and B-B.

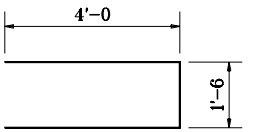

401 x 9'-6

INDIANA DEPARTMENT OF TRANSPORTATION

PAVED SIDE DITCH CUT-OFF WALL AND LUG

SEPTEMBER 1997

STANDARD DRAWING NO. **E 607-PSDT-03**

ANTHONY L. UREMOVICH REGISTERED No. 18095 STATE OF INDIANA PROFESSIONAL ENGINEER

DESIGN STANDARDS ENGINEER

DETAILS PLACED IN THIS FORMAT	11-15-99
/s/ Anthony L. Uremovich	11-15-99
DESIGN STANDARDS ENGINEER	DATE
/s/ Firooz Zandi	11-15-99
CHIEF HIGHWAY ENGINEER	DATE
ORIGINALLY APPROVED	9-01-97

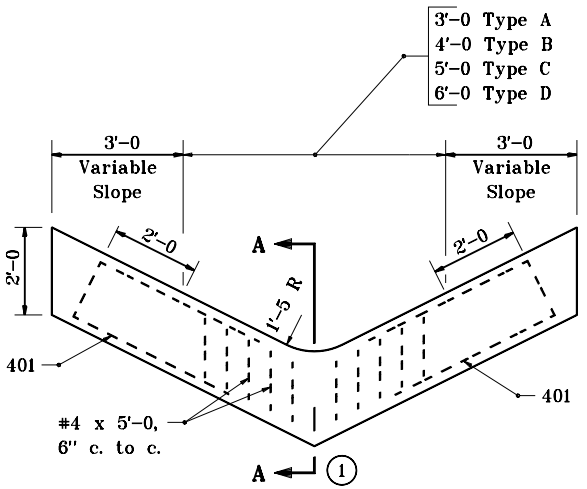

ELEVATION VIEW

CUT-OFF WALL FOR PAVED SIDE DITCH TYPES A THROUGH D

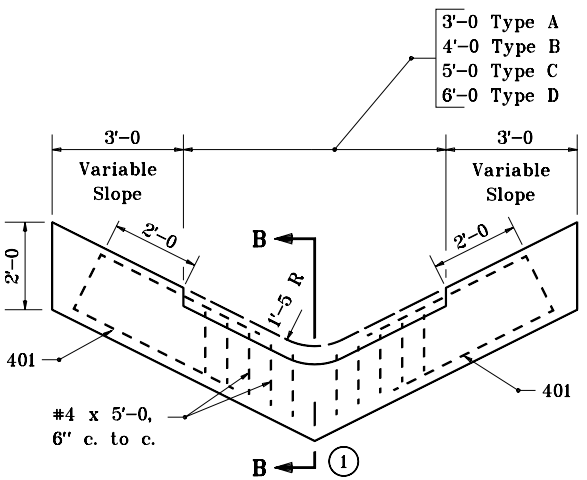

ELEVATION VIEW

LUG FOR PAVED SIDE DITCH TYPES A THROUGH D

GENERAL NOTES

(1) See Standard Drawing E 607-PSDT-02 for Sections A-A and B-B.

2. See Standard Drawing E 607-PSDT-03 for 401 bending diagram.

INDIANA DEPARTMENT OF TRANSPORTATION

PAVED SIDE DITCH CUT-OFF WALL AND LUG

SEPTEMBER 1997

STANDARD DRAWING NO. **E 607-PSDT-04**

ANTHONY L. UREMOVICH REGISTERED No. 18095 STATE OF INDIANA PROFESSIONAL ENGINEER

DESIGN STANDARDS ENGINEER

DETAILS PLACED IN THIS FORMAT 11-15-99

/s/ Anthony L. Uremovich 11-15-99
DESIGN STANDARDS ENGINEER DATE

/s/ Firooz Zandi 11-15-99
CHIEF HIGHWAY ENGINEER DATE

ORIGINALLY APPROVED 9-01-97

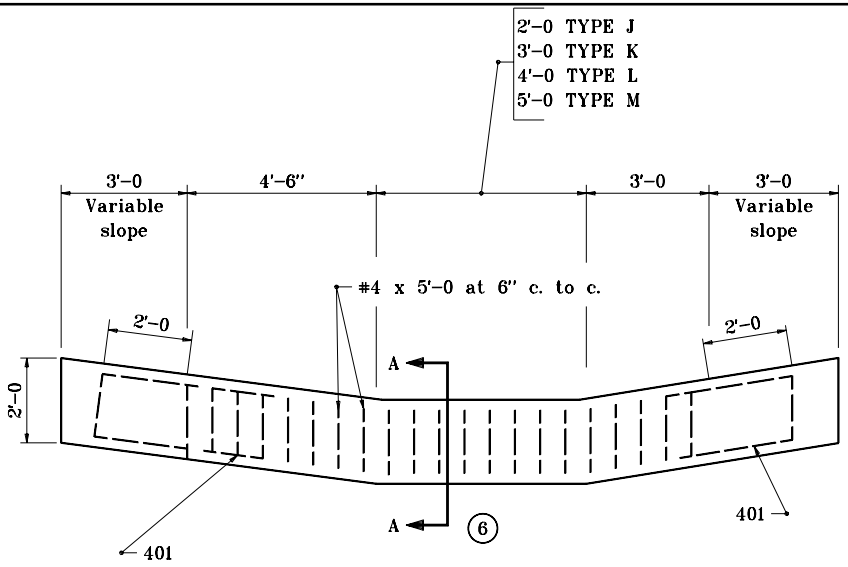

ELEVATION VIEW
CUT-OFF WALL FOR PAVED SIDE DITCH TYPES J THROUGH M

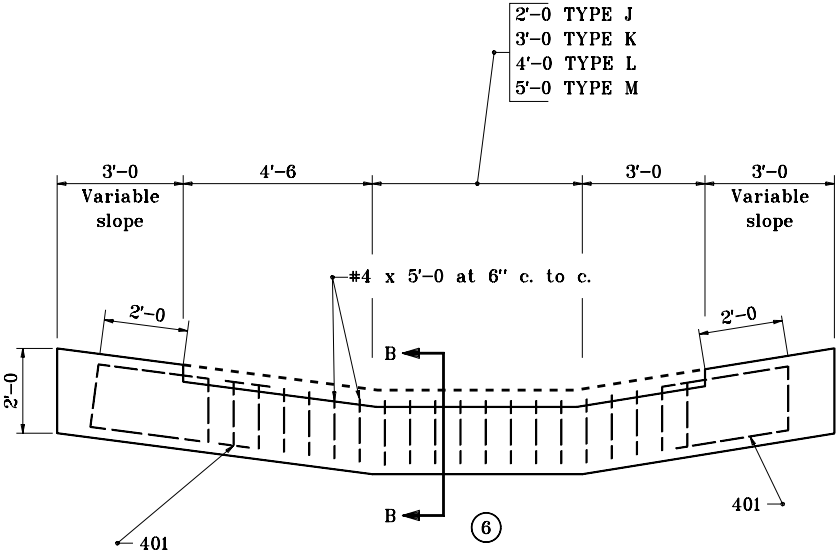

ELEVATION VIEW
LUG FOR PAVED SIDE DITCH TYPES J THROUGH M

GENERAL NOTES

1. The 6:1 sloped side shall be placed nearest the roadway.

2. Cutt-off walls shall be used at the begining and end of all paved side ditch.

3. Lugs shall be used at the following locations:

   a. 10 ft downslope from a grade change.
   b. 10 ft downslope from the intersection of different types of paved side ditch.
   c. At the downslope end of a transition between different types of paved side ditch.
   d. At the intervals as follows:

Interval	Grade
200 ft	3% to 5%
150 ft	5% to 8%
100 ft	8% to 10%
50 ft	10% & above

4. Paved side ditch transitions shall be required at intersections with earth ditches and pipe culverts. These transitions shall be converted to equivalent lengths of the type of paved side ditch specified at these locations.

5. Transitions of 10 ft or less shall be required between two different types of paved side ditch. Such transitions shall be converted to equivalent lengths of the larger type of paved side ditch specified at these locations.

(6) See Standard Drawing E 607-PSDT-04 for Sections A-A and B-B.

7. See Standard Drawing E 607-PSDT-03 for 401 bending diagram.

INDIANA DEPARTMENT OF TRANSPORTATION

P.S.D. CUT-OFF WALL & LUG AND GENERAL NOTES

JANUARY 2000

STANDARD DRAWING NO. **E 607-PSDT-05**

ANTHONY L. UREMOVICH REGISTERED No. 18095 STATE OF INDIANA PROFESSIONAL ENGINEER

DESIGN STANDARDS ENGINEER

/s/ Anthony L. Uremovich 1-03-00
DESIGN STANDARDS ENGINEER — DATE

/s/ Firooz Zandi 1-03-00
CHIEF HIGHWAY ENGINEER — DATE

GENERAL NOTES

1. See Standard Drawing E 607-PSDT-02 for Section B-B.

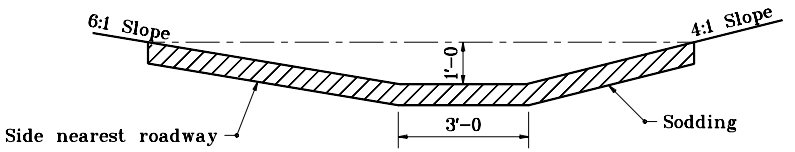

STANDARD 3' BOTTOM DITCH

(LOCATED WITHIN CLEAR ZONE)

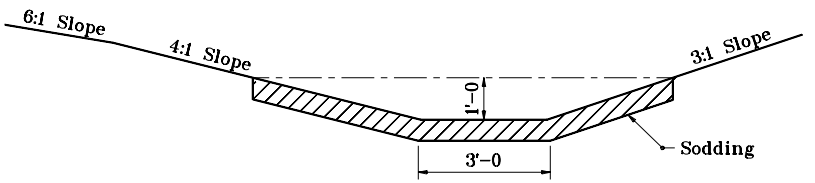

SPECIAL 3' BOTTOM DITCH

(LOCATED BEYOND CLEAR ZONE)

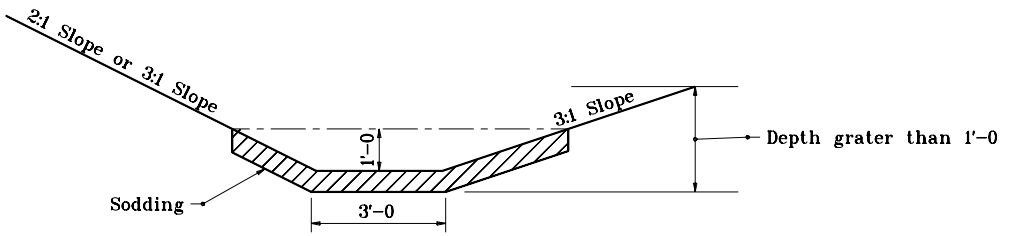

SPECIAL 3' BOTTOM DITCH

(LOCATED BEYOND CLEAR ZONE)

SODDED DITCH DETAILS

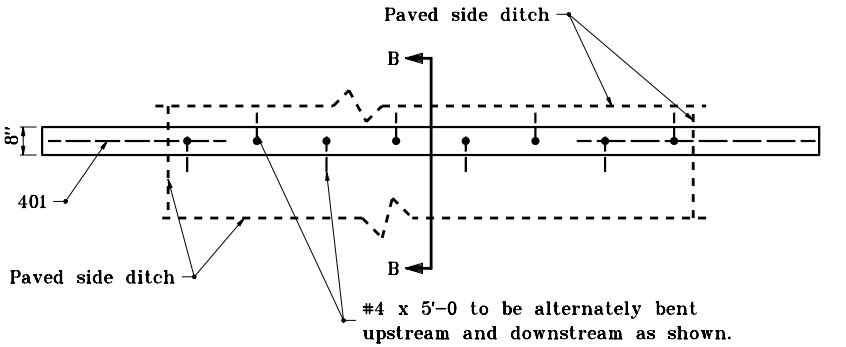

PLAN VIEW OF LUG (TYPICAL FOR ALL TYPES)

INDIANA DEPARTMENT OF TRANSPORTATION

P.S.D. LUGS & SODDED DITCH DETAILS

SEPTEMBER 1997

STANDARD DRAWING NO. **E 607-PSDT-06**

ANTHONY L. UREMOVICH REGISTERED No. 18095 STATE OF INDIANA PROFESSIONAL ENGINEER

DESIGN STANDARDS ENGINEER

DETAILS PLACED IN THIS FORMAT 7-27-99

/s/ Anthony L. Uremovich 7-27-99
DESIGN STANDARDS ENGINEER DATE

/s/ Firooz Zandi 7-27-99
CHIEF HIGHWAY ENGINEER DATE

ORIGINALLY APPROVED 9-01-97

GENERAL NOTES

(1) 660#/syd HMA mixture for patching required. Width of patch to be equal to width of asphalt shoulder in place.

(2) For pavement grades of 1% or steeper.

(3) For pavement grades of flatter than 1%.

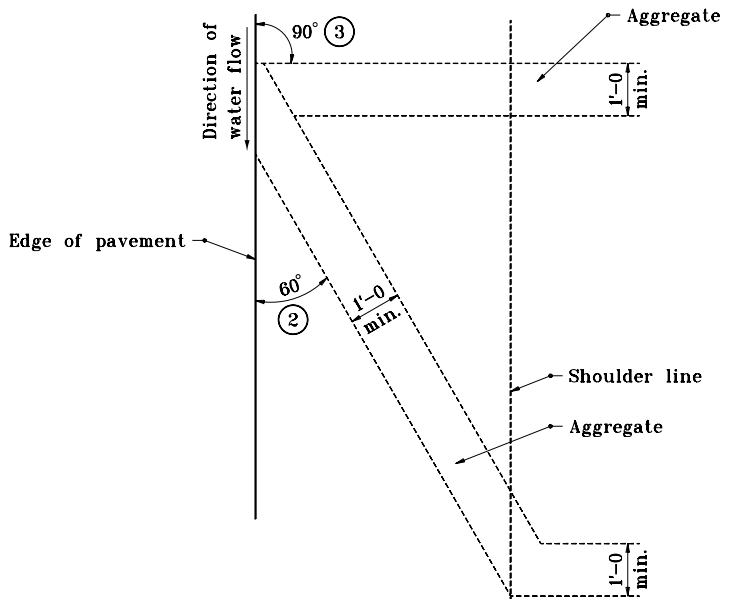

PLAN VIEW

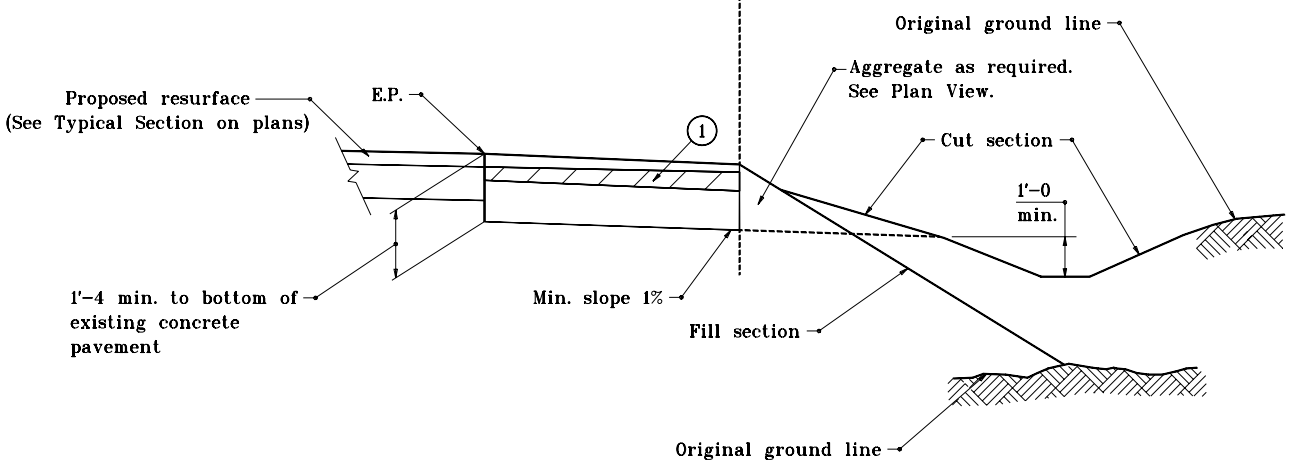

ELEVATION

SHOULDER DRAIN

INDIANA DEPARTMENT OF TRANSPORTATION

SHOULDER DRAIN

MAY 1998

STANDARD DRAWING NO. **E 608-SHDR-01**

ANTHONY L. UREMOVICH REGISTERED No. 18095 STATE OF INDIANA PROFESSIONAL ENGINEER

DESIGN STANDARDS ENGINEER

DETAILS PLACED IN THIS FORMAT	11-15-99
/s/ Anthony L. Uremovich DESIGN STANDARDS ENGINEER	11-15-99 DATE
/s/ Firooz Zandi CHIEF HIGHWAY ENGINEER	11-15-99 DATE
ORIGINALLY APPROVED	5-01-98

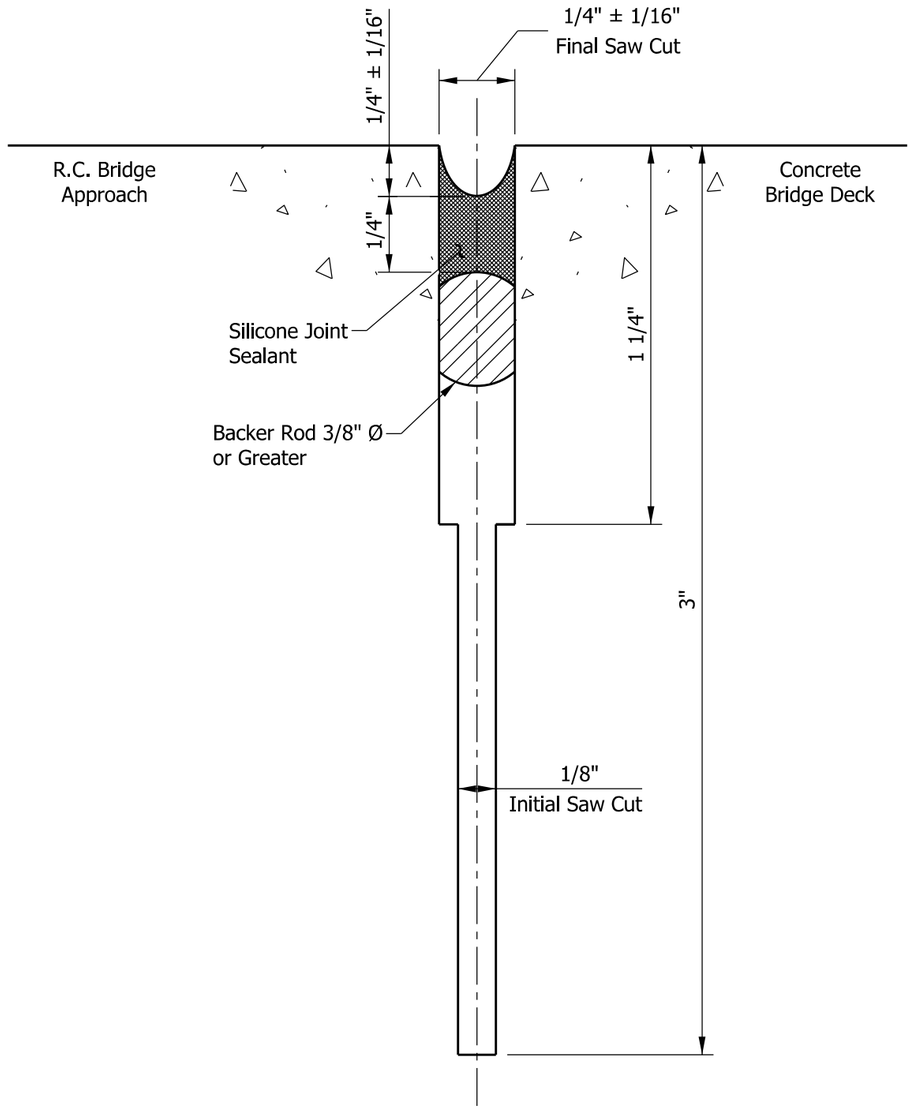

NOTES:

1. See Standard Drawing E-609-RCBA-01 for joint location.

INDIANA DEPARTMENT OF TRANSPORTATION

TYPE I-A JOINT

SEPTEMBER 2012

STANDARD DRAWING NO. E 609-BRJT-01

RICHARD L. VanCLEAVE REGISTERED No. 9750 STATE OF INDIANA PROFESSIONAL ENGINEER

DETAILS PLACED IN THIS FORMAT 09/04/12

/s/ Richard L. VanCleave *09/04/12*

SUPERVISOR, ROADWAY STANDARDS DATE

/s/ Mark A. Miller *09/04/12*

CHIEF ENGINEER DATE

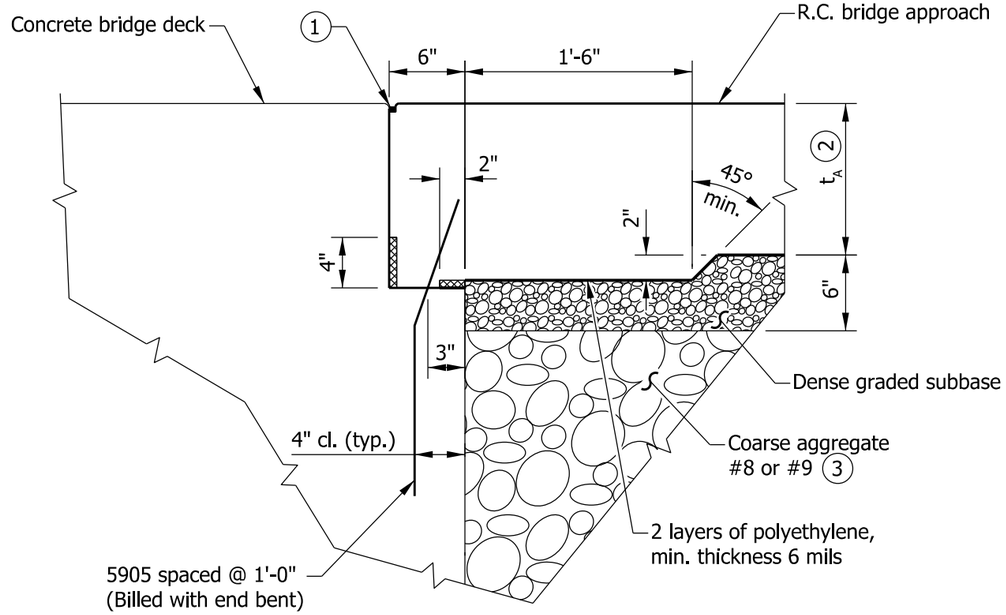

PAVEMENT LEDGE DETAIL

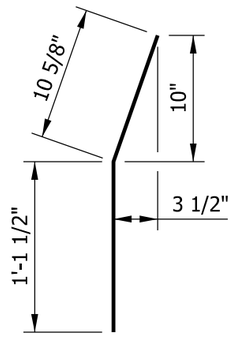

5905 x 2'-0"

NOTES

1. Joint type 1A. See Standard Drawing E 609-BRJT-01 for details.
2. See plans for t_A.
3. Flowable backfill if slab bridge.
4. All reinforcing bars shall be epoxy coated.
5. See Standard Drawing E 703-BRST-01 for reinforcing-bar bending details and notes.

LEGEND

Expanded polystyrene, 1/2" thickness

INDIANA DEPARTMENT OF TRANSPORTATION

REINFORCED CONCRETE BRIDGE APPROACH
PAVEMENT LEDGE DETAIL

SEPTEMBER 2012

STANDARD DRAWING NO. E 609-RCBA-01

RICHARD L. VanCLEAVE REGISTERED No. 9750 STATE OF INDIANA PROFESSIONAL ENGINEER

/s/ Richard L. Van Cleave 09/04/12
SUPERVISOR, ROADWAY STANDARDS DATE

/s/ Mark A. Miller 09/04/12
CHIEF ENGINEER DATE

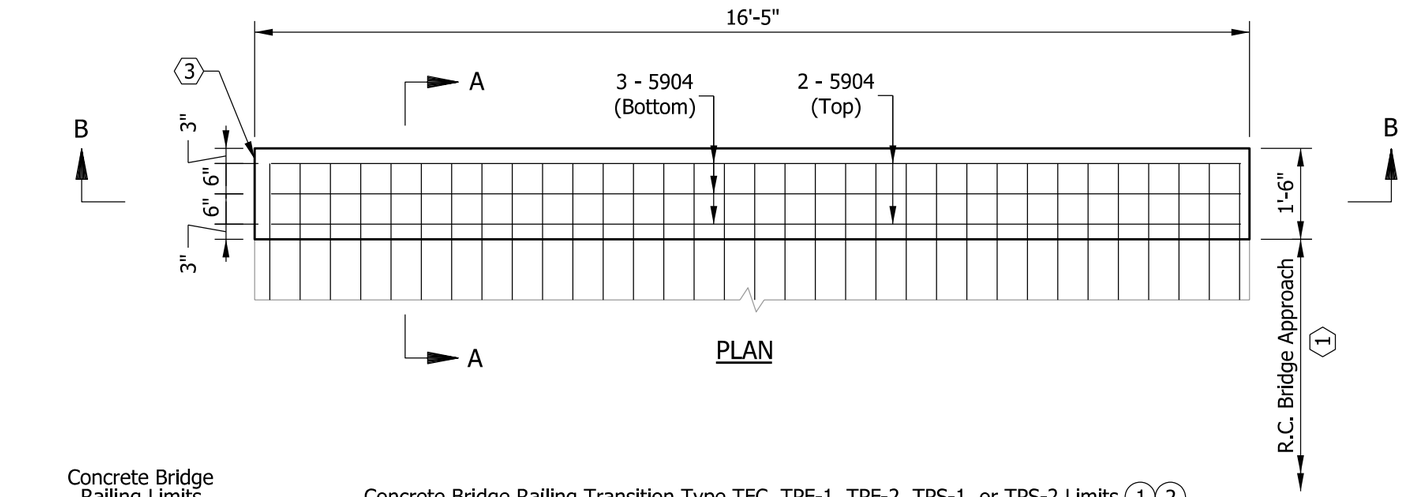

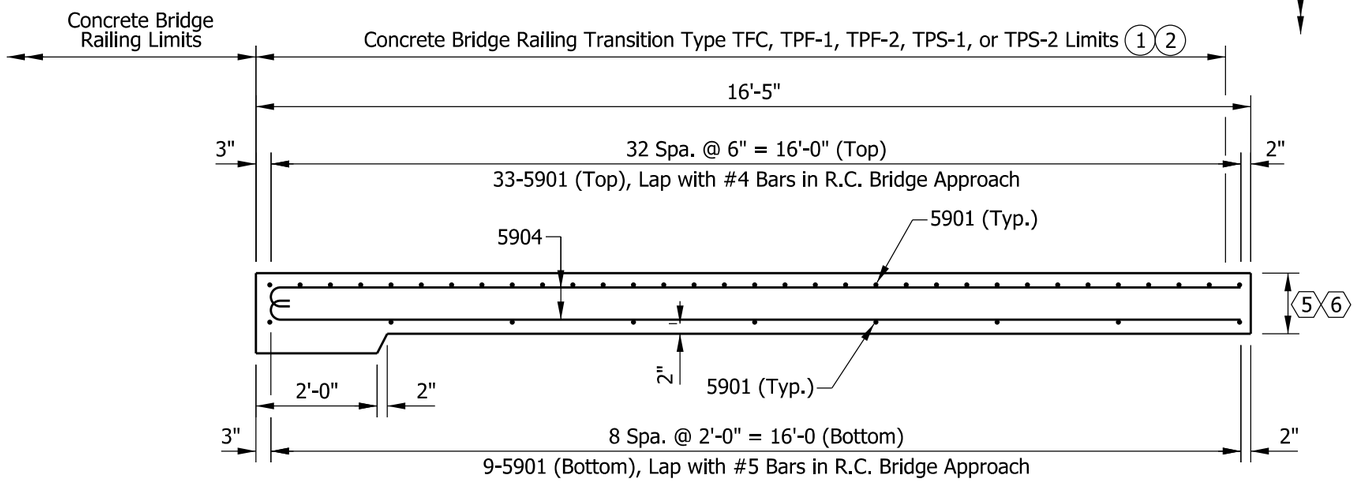

SECTION B-B

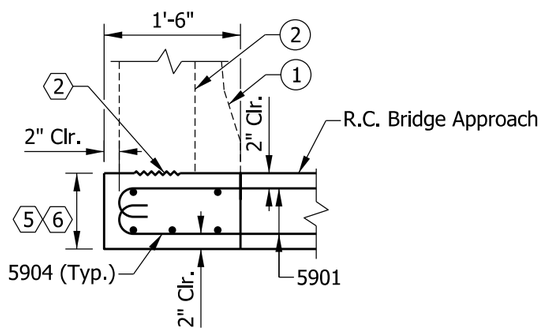

SECTION A-A

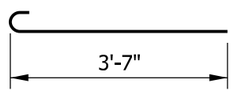

5901 x 4'-2"

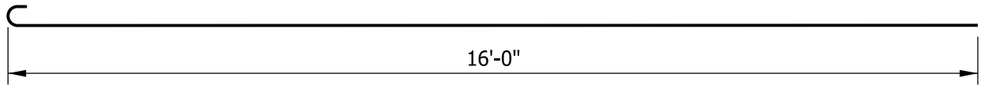

5904 x 16'-7"

NOTES

1. See Standard Drawings E 706-TTFC-01 through -03 for concrete bridge railing transition type TFC details.

2. See Standard Drawings E 706-TTPP-01 and -02 for concrete bridge railing transition type TPF-1 details.
   See Standard Drawings E 706-TTPP-03 and -04 for concrete bridge railing transition type TPF-2 details.
   See Standard Drawings E 706-TTPP-05 and -06 for concrete bridge railing transition type TPS-1 details.
   See Standard Drawings E 706-TTPP-07 and -08 for concrete bridge railing transition type TPS-2 details.

3. See Standard Drawing E 609-TBAE-04 for General Notes ⬡.

BILL OF MATERIALS			
Quantities are for one RCBA extension			
EPOXY-COATED REINFORCING BARS			
MARK OR SIZE	NO. OF BARS	LENGTH	WEIGHT
5901	42	4'-2"	
5904	5	16'-7"	
Total Epoxy-Coated Reinforcing Bars			269 LBS
MISCELLANEOUS			
RCBA Extension Area			2.7 SYS

INDIANA DEPARTMENT OF TRANSPORTATION

RCBA EXTENSION FOR BRIDGE RAILING TRANSITION TFC, TPF-1, TPF-2, TPS-1, OR TPS-2

SEPTEMBER 2013

STANDARD DRAWING NO. E 609-TBAE-01

ELIZABETH W. PHILLIPS
REGISTERED
No. 10200124
STATE OF INDIANA
PROFESSIONAL ENGINEER

/s/ Elizabeth W. Phillips 02/28/13
DESIGN STANDARDS ENGINEER DATE

/s/ Mark A. Miller 03/27/13
CHIEF ENGINEER DATE

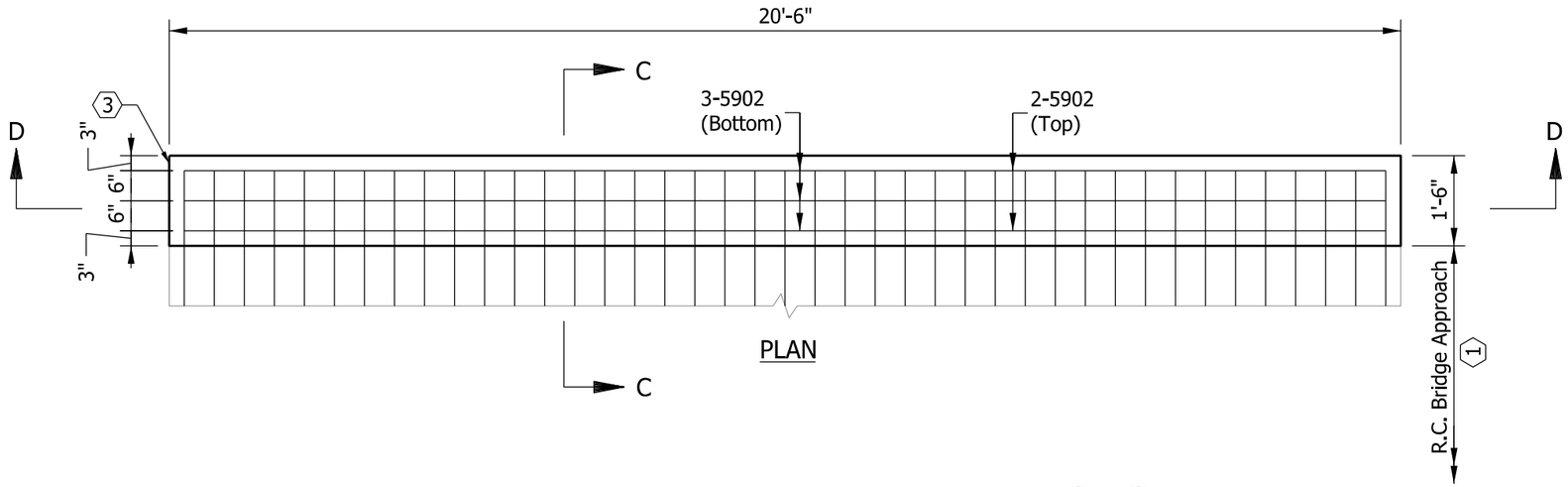

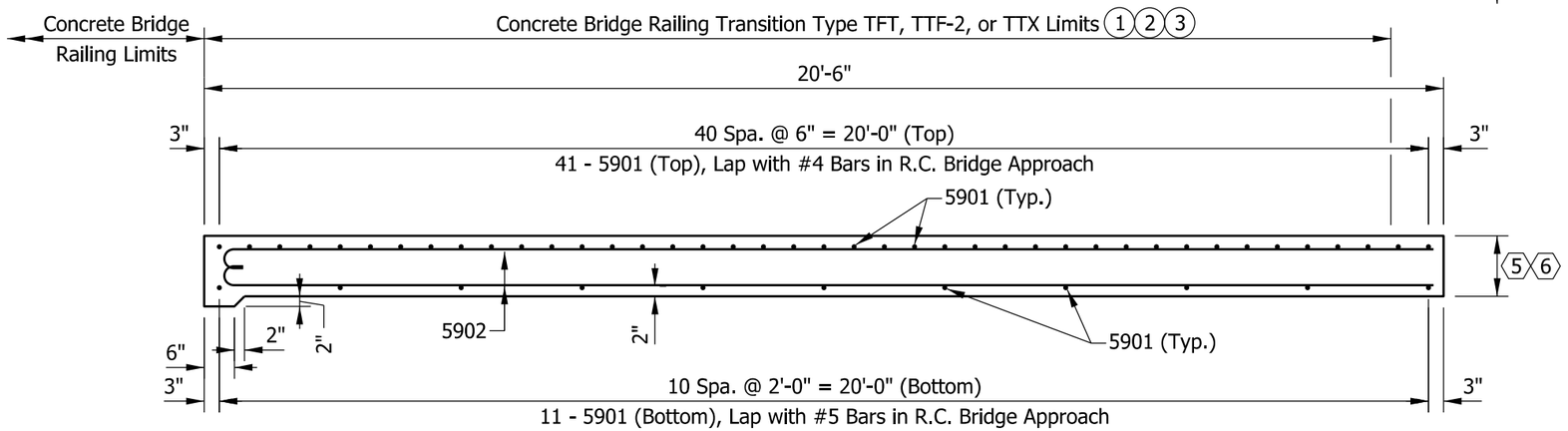

SECTION D-D

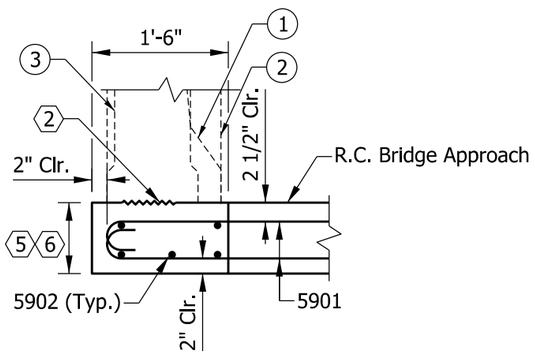

SECTION C-C

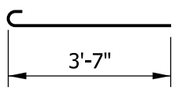

5901 x 4'-2"

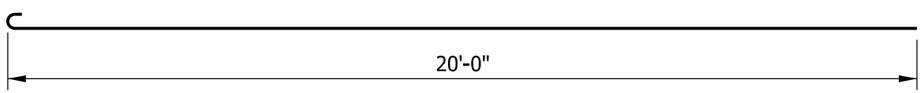

5902 x 20'-7"

NOTES

1. See Standard Drawing E 706-TTFT-01 through -03 for concrete bridge railing transition type TFT details.
2. See Standard Drawing E 706-TTTF-01 through -04 for concrete bridge railing transition type TTF-2 details.
3. See Standard Drawing E 706-TTTX-01 and -02 for concrete bridge railing transition type TTX details.
4. See Standard Drawing E 609-TBAE-04 for General Notes ⬡.

BILL OF MATERIALS			
Quantities are for one RCBA extension			
EPOXY-COATED REINFORCING BARS			
MARK OR SIZE	NO. OF BARS	LENGTH	WEIGHT
5901	52	4'-2"	
5902	5	20'-7"	
Total Epoxy-Coated Reinforcing Bars			333 LBS
MISCELLANEOUS			
RCBA Extension Area			3.4 SYS

INDIANA DEPARTMENT OF TRANSPORTATION

RCBA EXTENSION FOR BRIDGE RAILING TRANSITION TFT, TTF-2, OR TTX

SEPTEMBER 2013

STANDARD DRAWING NO. E 609-TBAE-02

ELIZABETH W. PHILLIPS REGISTERED No. 10200124 STATE OF INDIANA PROFESSIONAL ENGINEER

/s/ Elizabeth W. Phillips 02/28/13
DESIGN STANDARDS ENGINEER DATE

/s/ Mark A. Miller 03/27/13
CHIEF ENGINEER DATE

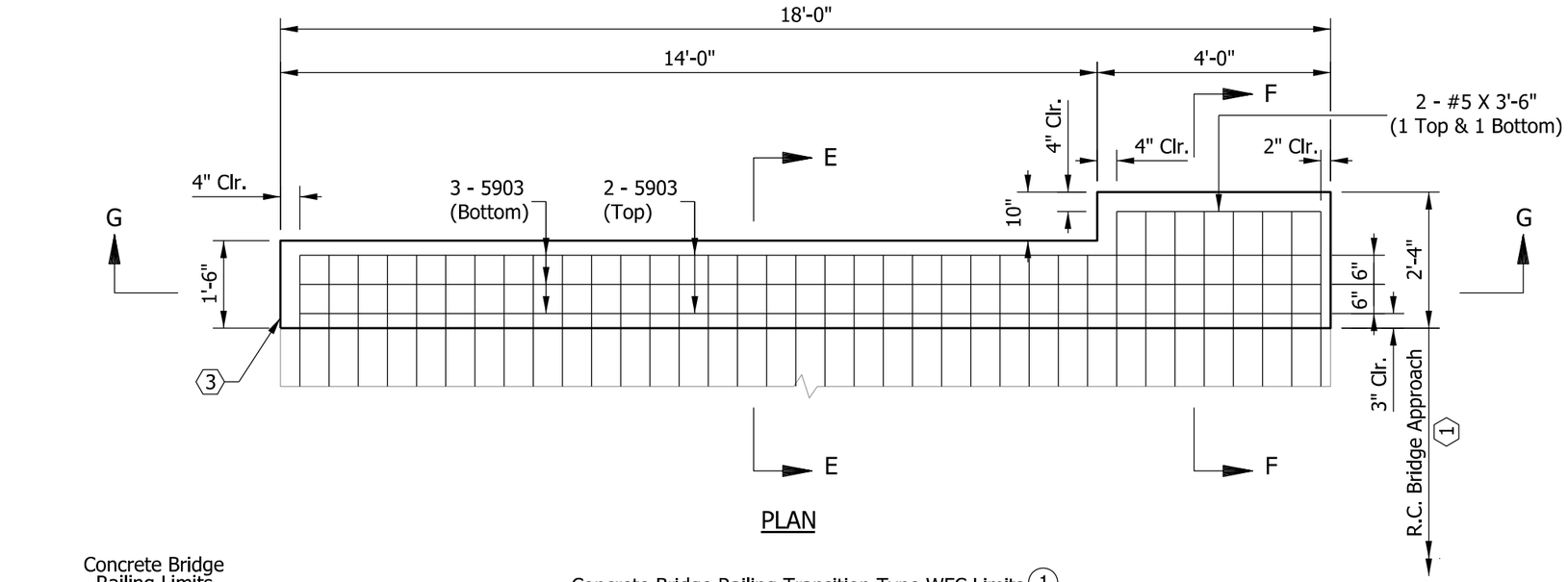

PLAN

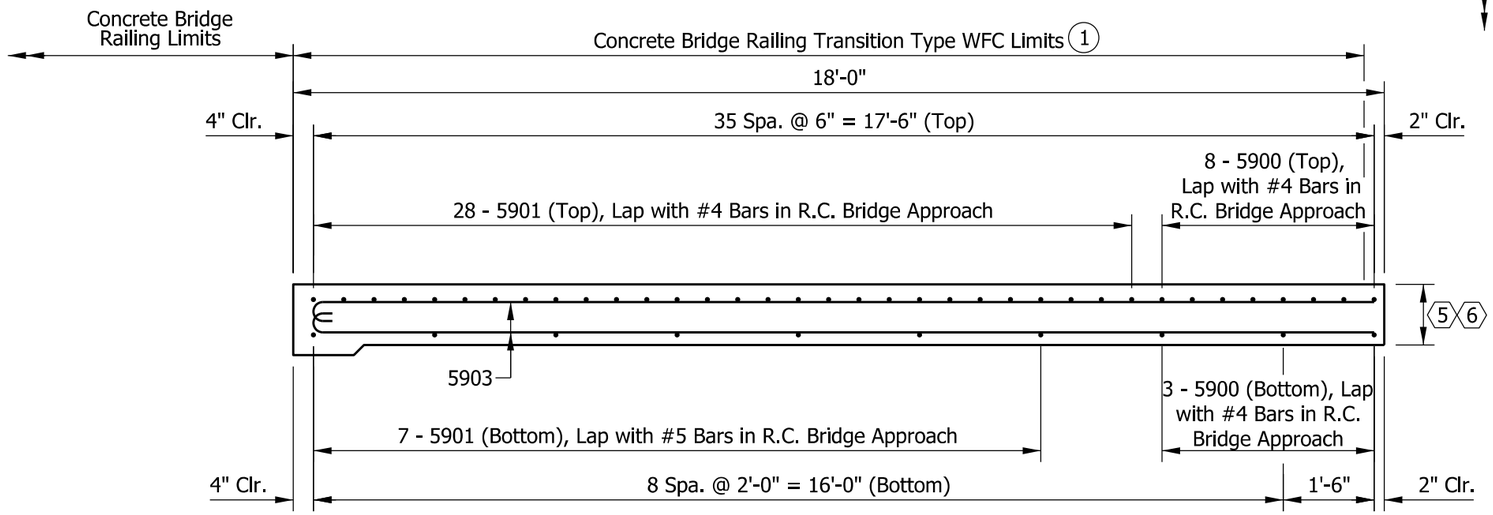

SECTION G-G

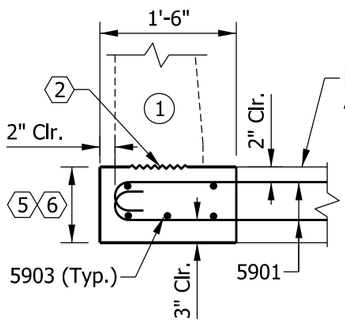

SECTION E-E

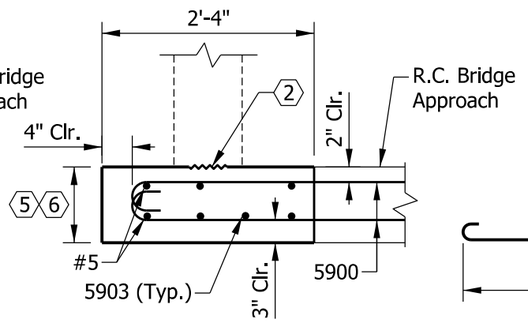

SECTION F-F

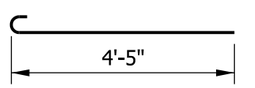

5900 x 5'-0"

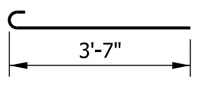

5901 x 4'-2"

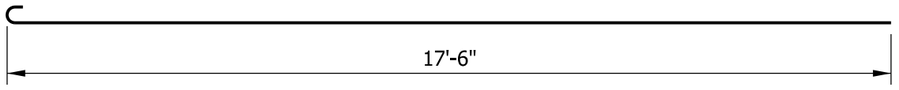

5903 x 18'-1"

NOTES

1. See Standard Drawings E 706-TWFC-01 through -03 for concrete bridge railing transition WFC details.
2. See Standard Drawing E 609-TBAE-04 for General Notes ⬡.

BILL OF MATERIALS			
Quantities are for one RCBA extension			
EPOXY-COATED REINFORCING BARS			
MARK OR SIZE	NO. OF BARS	LENGTH	WEIGHT
5900	11	5'-0"	
5901	35	4'-2"	
5903	5	18'-1"	
#5	2	3'-6"	
Total Epoxy-Coated Reinforcing Bars			312 LBS
MISCELLANEOUS			
RCBA Extension Area			3.4 SYS

INDIANA DEPARTMENT OF TRANSPORTATION

RCBA EXTENSION FOR BRIDGE RAILING TRANSITION WFC

SEPTEMBER 2013

STANDARD DRAWING NO. E 609-TBAE-03

ELIZABETH W. PHILLIPS REGISTERED No. 10200124 STATE OF INDIANA PROFESSIONAL ENGINEER

/s/ Elizabeth W. Phillips 02/28/13
DESIGN STANDARDS ENGINEER DATE

/s/ Mark A. Miller 03/27/13
CHIEF ENGINEER DATE

GENERAL NOTES

1. See Standard Drawing E 609-RCBA-01 and the plans for reinforced concrete bridge approach details.
2. Construction joint type A. See Standard Drawing E 702-CJTA-01 for details.
3. This end of the reinforced concrete bridge approach extension shall match the construction at the bridge end as shown on the plans.
4. See Standard Drawing E 703-BRST-01 for reinforcing-bar bending details and notes.
5. See the plans for thickness of RCBA and its extension to be used with asphalt pavement.
6. See the plans for thickness of RCBA and its extension to be used with a terminal joint and portland cement concrete pavement.

INDIANA DEPARTMENT OF TRANSPORTATION

RCBA EXTENSION FOR
BRIDGE RAILING TRANSITION
GENERAL NOTES

SEPTEMBER 2012

STANDARD DRAWING NO. E 609-TBAE-04

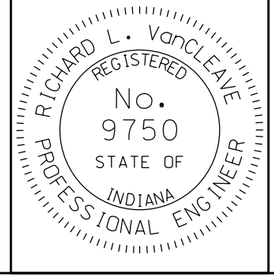

/s/ Richard L. Van Cleave *09/04/12*
SUPERVISOR, ROADWAY STANDARDS DATE

/s/ Mark A. Miller *09/04/12*
CHIEF ENGINEER DATE

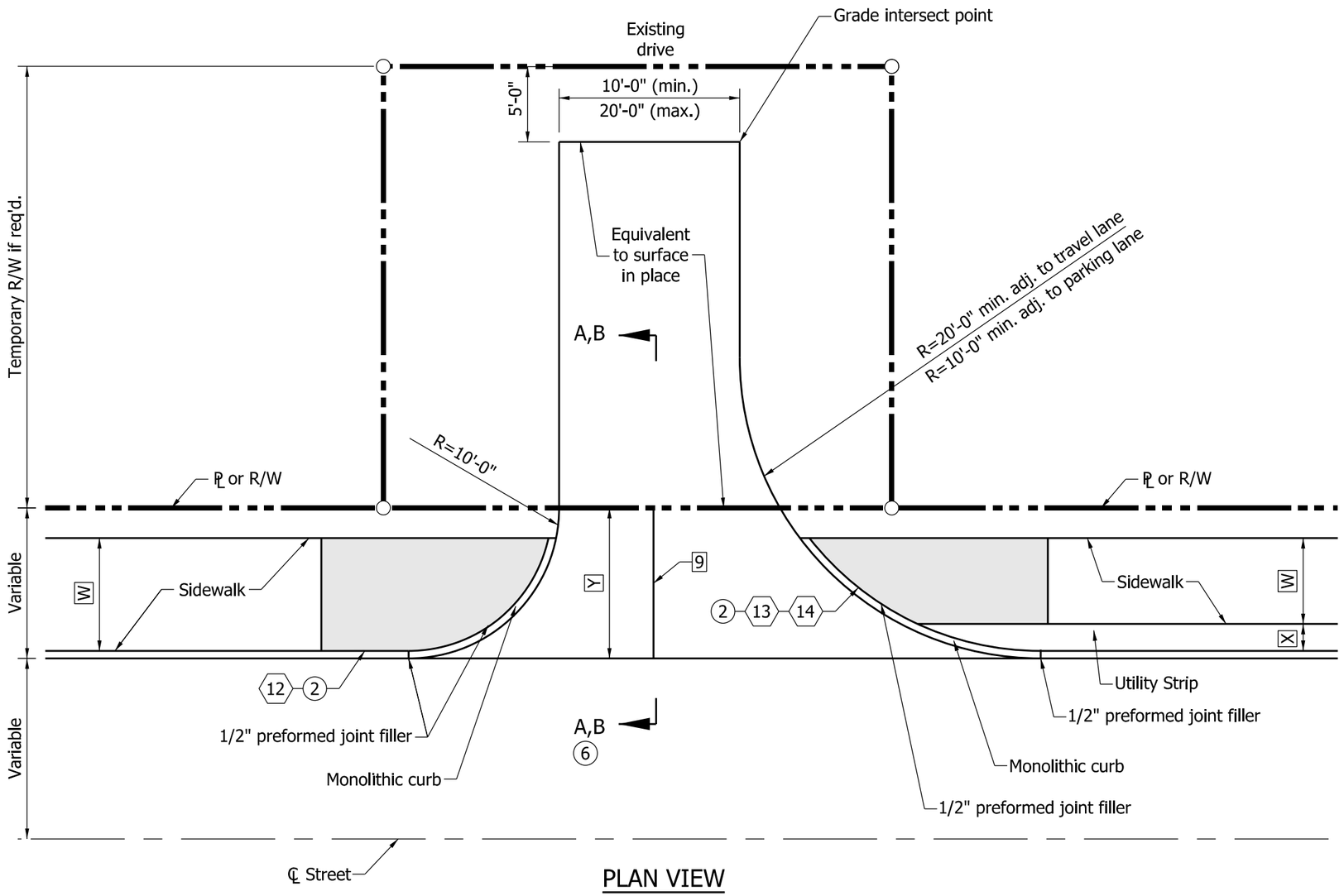

PLAN VIEW

NOTES:

1. See Standard Drawing E 610-DRIV-13 for General Notes and additional Legend.
2. See Standard Drawings E 604-SDWK-01 or E 604-SDWK-02 for sidewalk elevation transition details.
3. See Standard Drawings E 610-DRIV-03 for concrete curb and gutter connection detail.
4. See Standard Drawings E 610-DRIV-07 for PCCP joint placement detail.
5. Pavement shall be PCCP for Approaches, 6 in., on subgrade treatment Type IIIA.
6. See Standard Drawing E 610-DRIV-08 for sections A-A and B-B.
7. See Standard Drawing E 503-CCPJ-02 for longitudinal joint details.

LEGEND

[W] = Width of sidewalk

[X] = Distance between back face of curb to sidewalk.

[Y] = Distance from front face of curb to ℄ or R/W.

= Sidewalk elevation transition.

INDIANA DEPARTMENT OF TRANSPORTATION

CLASS I DRIVE

SEPTEMBER 2012

STANDARD DRAWING NO. E 610-DRIV-01

RICHARD L. VanCLEAVE REGISTERED No. 9750 STATE OF INDIANA PROFESSIONAL ENGINEER

/s/ Richard L. VanCleave 09/04/12

SUPERVISOR, ROADWAY STANDARDS DATE

/s/ Mark A. Miller 09/04/12

CHIEF ENGINEER DATE

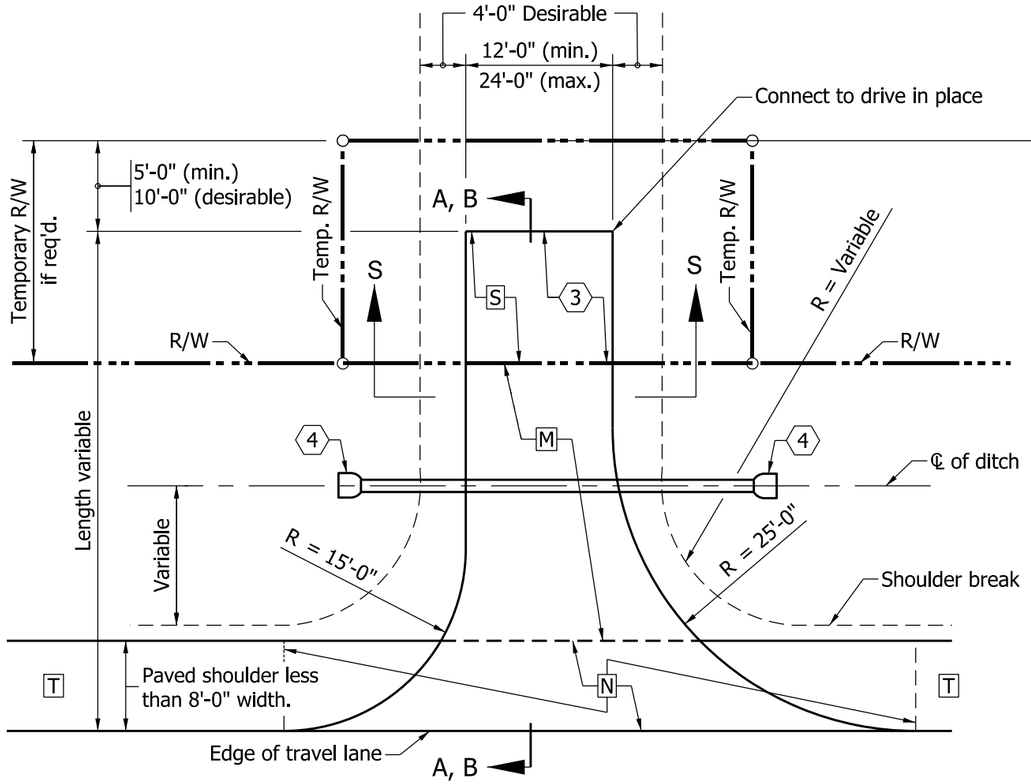

PLAN VIEW

(PAVED SHOULDER LESS THAN 8'-0" IN WIDTH OR UNPAVED SHOULDER)

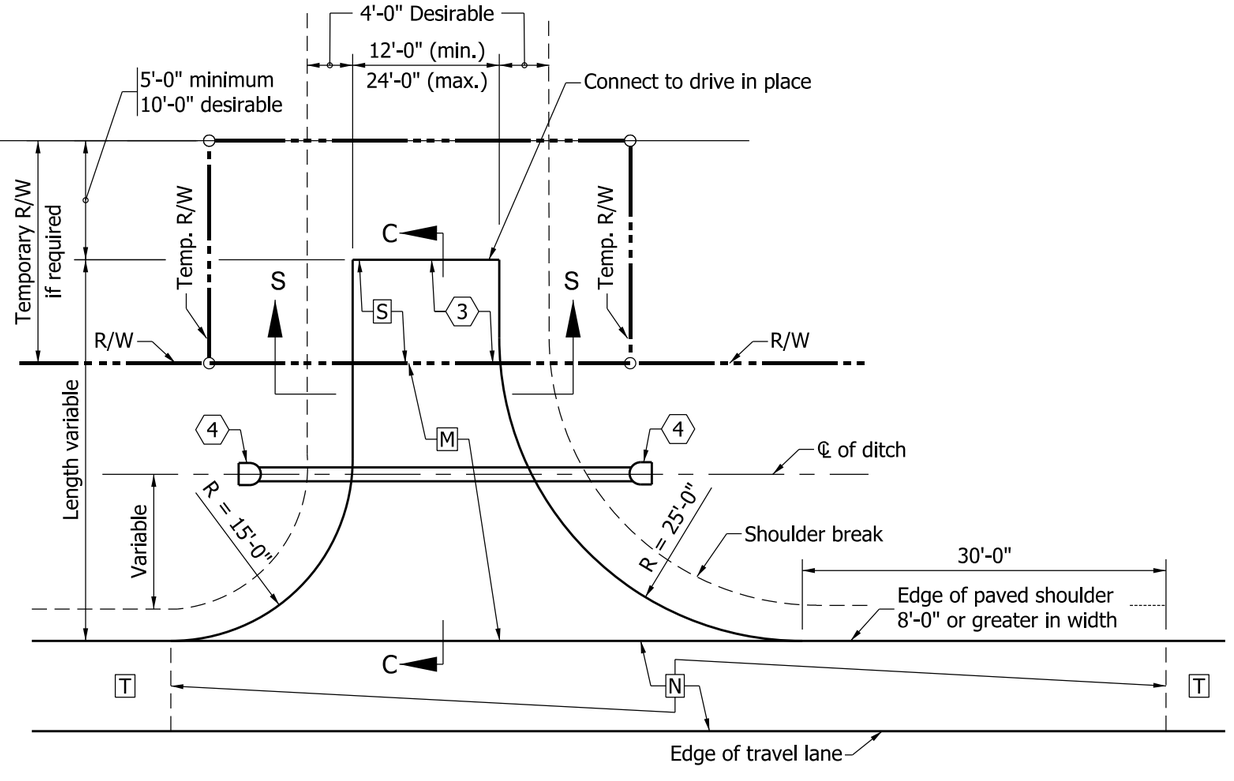

PLAN VIEW

(PAVED SHOULDER 8'-0" OR GREATER IN WIDTH)

NOTES:

1. See Standard Drawing E 610-DRIV-13 for General Notes and additional Legend.
2. See Standard Drawings E 610-DRIV-10 for Sections A-A, B-B and C-C.
3. See Standard Drawings E 610-DRIV-10 for approach grades.
4. See Standard Drawings E 610-DRIV-09 for Section S-S.

LEGEND

[M] HMA for Approaches:
165#/syd HMA Surface Type B on
385#/syd HMA Intermediate Type B on
subgrade treatment Type IIIA
or
PCCP for Approaches, 6",
subgrade treatment Type IIIA

[N] The greater thickness of either the drive [M] or the paved shoulder [T] section.

[T] Plan shoulder section.

[S] For type and thickness equivalent to surface in place, see plans.

INDIANA DEPARTMENT OF TRANSPORTATION

CLASS II DRIVE

SEPTEMBER 2010

STANDARD DRAWING NO. E 610-DRIV-02

RICHARD L. VanCLEAVE
REGISTERED
No. 9750
STATE OF INDIANA
PROFESSIONAL ENGINEER

DESIGN STANDARDS ENGINEER

/s/ Richard L. VanCleave 09/01/10
DESIGN STANDARDS ENGINEER DATE

/s/ Mark A. Miller 09/01/10
CHIEF HIGHWAY ENGINEER DATE

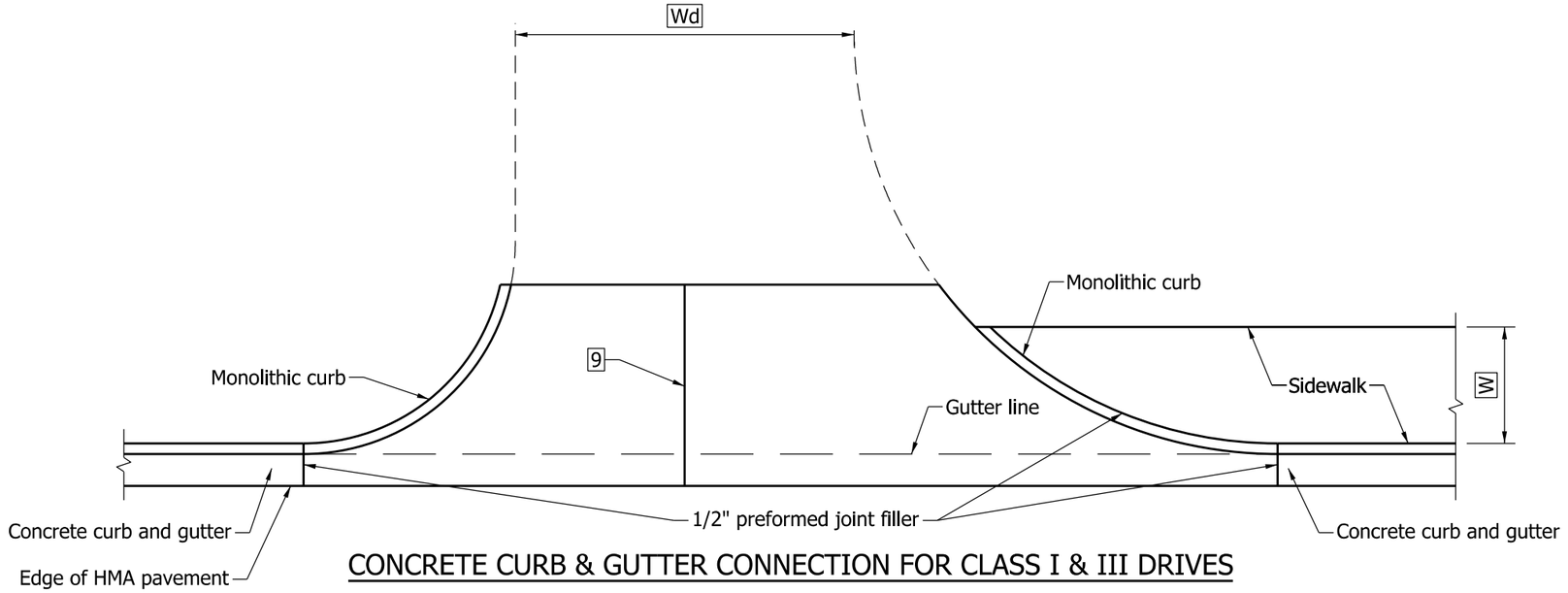

CONCRETE CURB & GUTTER CONNECTION FOR CLASS I & III DRIVES

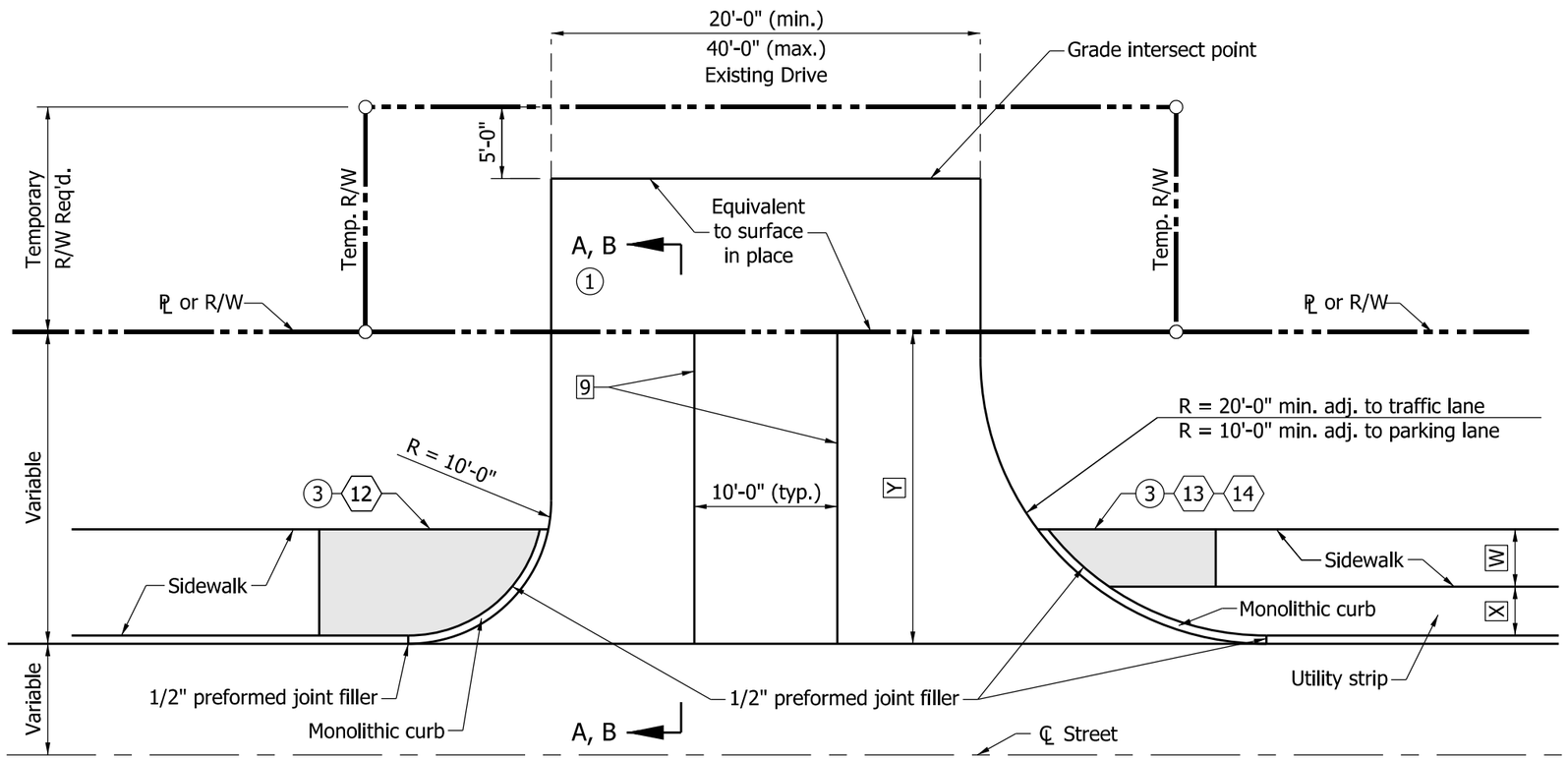

PLAN VIEW - CLASS III DRIVE

NOTES:

1. See Standard Drawing E 610-DRIV-08 for Section A-A, and Section B-B.
2. Pavement shall be PCCP for Approaches, 9 in., on subgrade treatment Type IIIA.
3. See Standard Drawings E 604-SDWK-01 or E 604-SDWK-02 for sidewalk elevation transition details, or Standard Drawing E 604-SWCR-09 for sidewalk curb ramp details if the drive is signalized.
4. See Standard Drawing E 610-DRIV-07 for joint placement details.
5. See Standard Drawing E 610-DRIV-13 for General Notes and additional Legend.
6. See Standard Drawing 503-CCPJ-02 for longitudinal joint details.

LEGEND

- W = Width of sidewalk
- Wd = Driveway width
- X = Distance between back face of curb and sidewalk
- Y = Distance from front face of curb to ℄ or R/W
- = Sidewalk elevation transition

INDIANA DEPARTMENT OF TRANSPORTATION

CLASS III DRIVE

SEPTEMBER 2012

STANDARD DRAWING NO. E 610-DRIV-03

RICHARD L. VanCLEAVE REGISTERED No. 9750 STATE OF INDIANA PROFESSIONAL ENGINEER

/s/ Richard L. VanCleave 09/04/12
SUPERVISOR, ROADWAY STANDARDS DATE

/s/ Mark A. Miller 09/04/12
CHIEF ENGINEER DATE

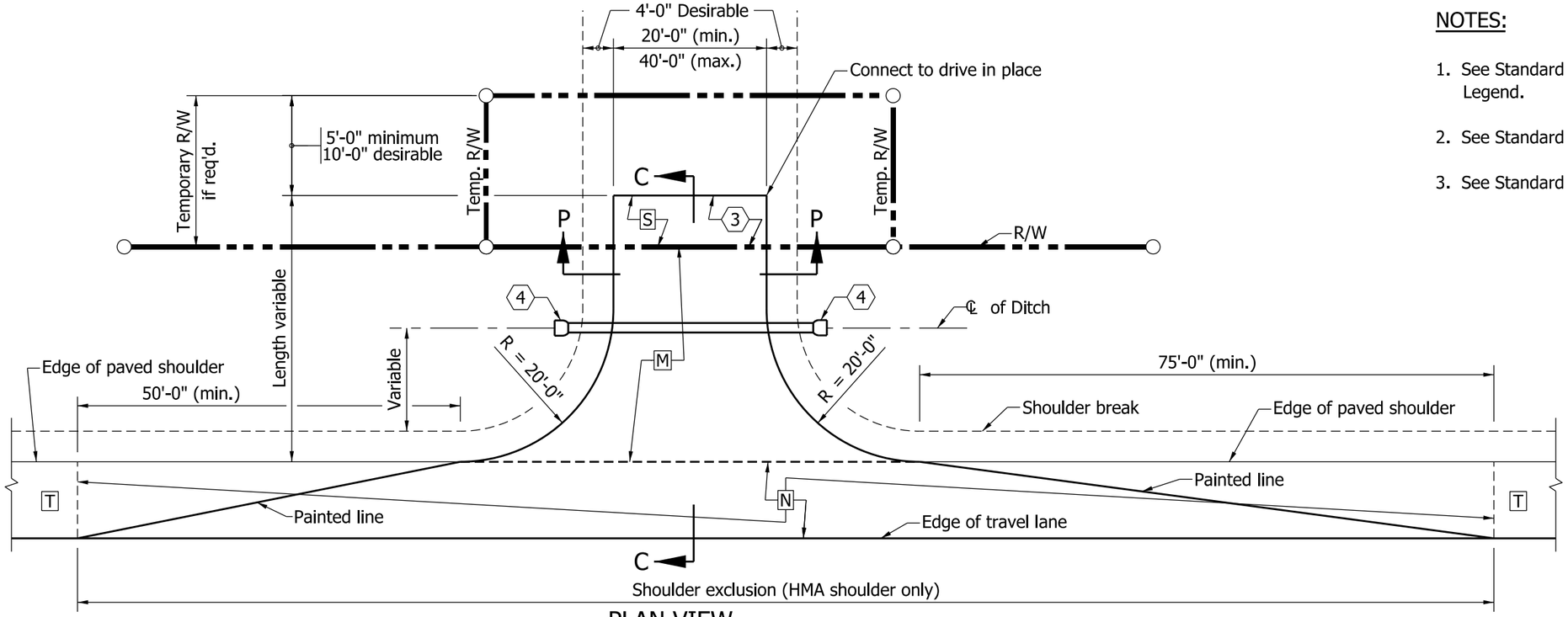

PLAN VIEW

(PAVED SHOULDER 8'-0" FEET OR GREATER IN WIDTH)

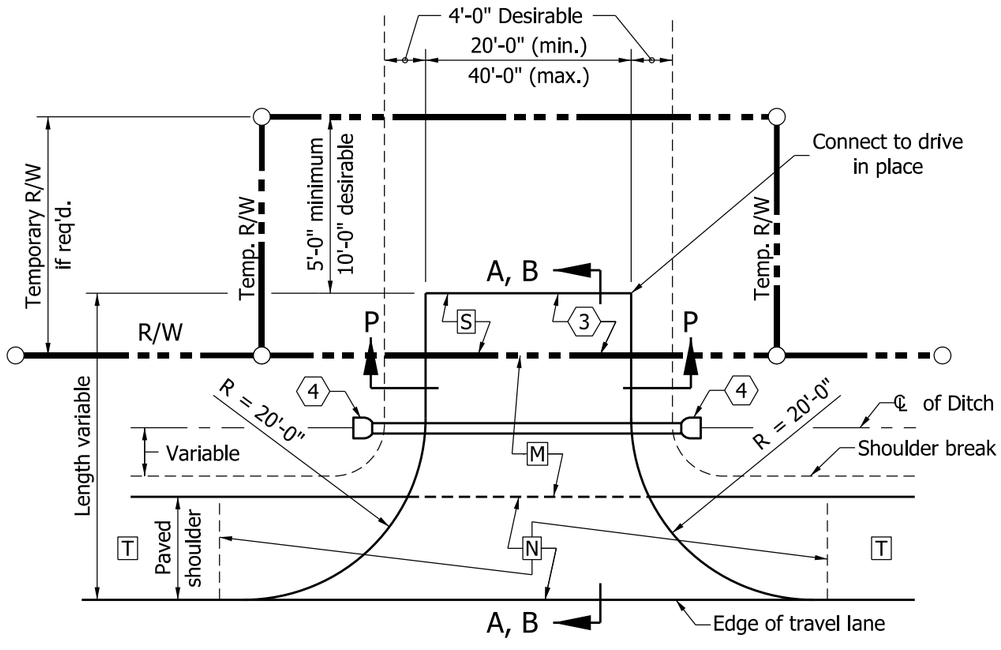

PLAN VIEW

(PAVED SHOULDER LESS THAN 8'-0" IN WIDTH OR UNPAVED SHOULDER)

NOTES:

1. See Standard Drawing E 610-DRIV-13 for General Notes and additional Legend.
2. See Standard Drawings E 610-DRIV-10 for Sections A-A, B-B and C-C.
3. See Standard Drawings E 610-DRIV-09 for Section P-P.

LEGEND

M HMA for Approaches:
165#/syd HMA Surface Type B on
275#/syd HMA Intermediate Type B on
880#/syd HMA base, Type B on
subgrade treatment Type IIIA
or
PCCP for Approaches, 9", on
subgrade treatment Type IIIA

N The greater thickness of either the drive M or the paved shoulder T section.

T Plan shoulder section.

S For type and thickness equivalent to surface in place, see plans.

INDIANA DEPARTMENT OF TRANSPORTATION

CLASS IV DRIVE

SEPTEMBER 2010

STANDARD DRAWING NO. E 610-DRIV-04

RICHARD L. VanCLEAVE REGISTERED No. 9750 STATE OF INDIANA PROFESSIONAL ENGINEER

DESIGN STANDARDS ENGINEER

/s/ Richard L. VanCleave 09/01/10
DESIGN STANDARDS ENGINEER DATE

/s/ Mark A. Miller 09/01/10
CHIEF HIGHWAY ENGINEER DATE

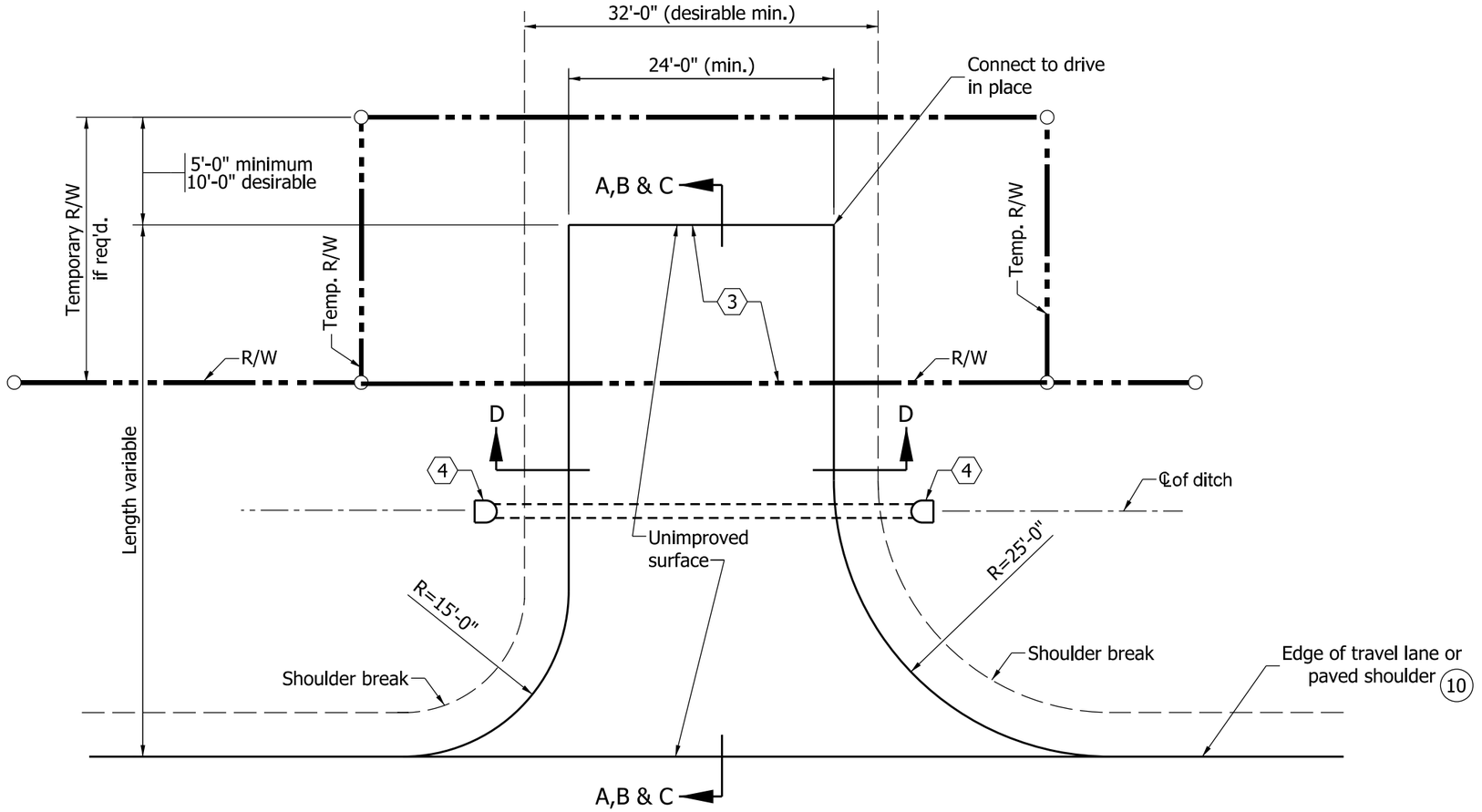

PLAN VIEW

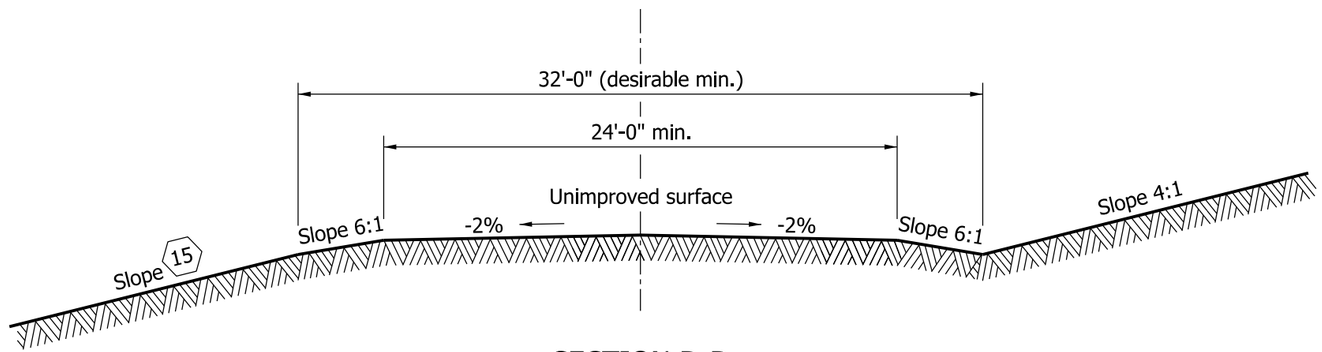

SECTION D-D

Notes:

1. See Standard Drawing E 610-DRIV-13 for General Notes.
2. See Standard Drawing E 610-DRIV-10 for Section A-A, B-B and C-C.

(10) Where the shoulder is earth or aggregate or the paved width is less than 8'-0", the drive radii shall be tangent to the edge of the travel lane. Where the paved shoulder width is 8'-0" or more, the drive radii shall be tangent to the edge of the paved shoulder.

INDIANA DEPARTMENT OF TRANSPORTATION

CLASS V DRIVE
FIELD ENTRANCE

SEPTEMBER 2010

STANDARD DRAWING NO. E 610-DRIV-05

RICHARD L. VanCLEAVE REGISTERED No. 9750 STATE OF INDIANA PROFESSIONAL ENGINEER

DESIGN STANDARDS ENGINEER

/s/ Richard L. VanClaeve 09/01/10
DESIGN STANDARDS ENGINEER DATE

/s/ Mark A. Miller 09/01/10
CHIEF HIGHWAY ENGINEER DATE

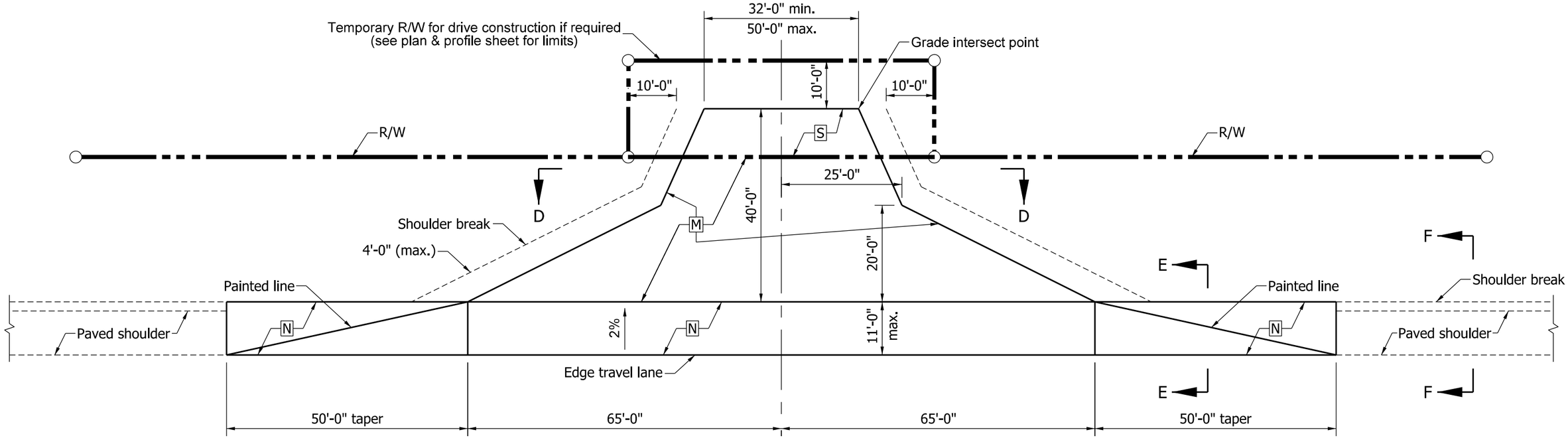

PLAN VIEW

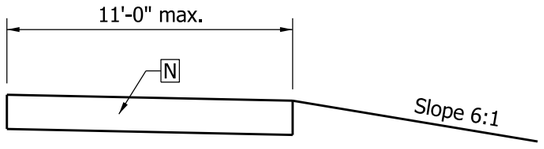

SECTION E-E

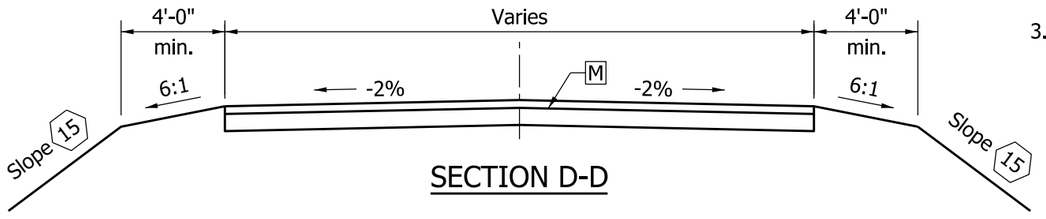

SECTION D-D

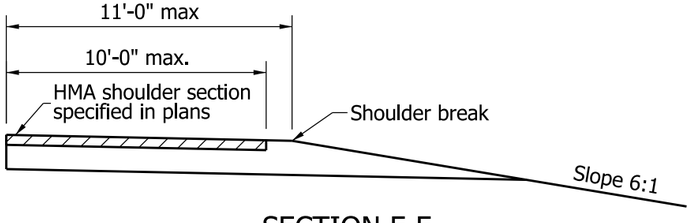

SECTION F-F

NOTES:

1. See Standard Drawing E 610-DRIV-13 for General Notes and additional Legend.
2. See Standard Drawings E 610-DRIV-11 for drive profile grades.
3. Class VI Drive accommodates a WB-65 (IDV) design vehicle with a 45'-0" turning radius.

LEGEND

M HMA for Approaches:
165#/syd HMA Surface Type B on
275#/syd HMA Intermediate Type B on
880#/syd HMA base, Type B on
subgrade treatment Type IIIA
or
PCCP for Approaches, 9", on
subgrade treatment Type IIIA

N The greater thickness of either the drive M or the paved shoulder section.

S For type and thickness equivalent to surface in place, see plans.

INDIANA DEPARTMENT OF TRANSPORTATION

CLASS VI DRIVE PLAN AND SECTIONS

SEPTEMBER 2010

STANDARD DRAWING NO. E 610-DRIV-06

RICHARD L. VanCLEAVE REGISTERED No. 9750 STATE OF INDIANA PROFESSIONAL ENGINEER

DESIGN STANDARDS ENGINEER

/s/ Richard L. VanCleave 09/01/10
DESIGN STANDARDS ENGINEER DATE

/s/ Mark A. Miller 09/01/10
CHIEF HIGHWAY ENGINEER DATE

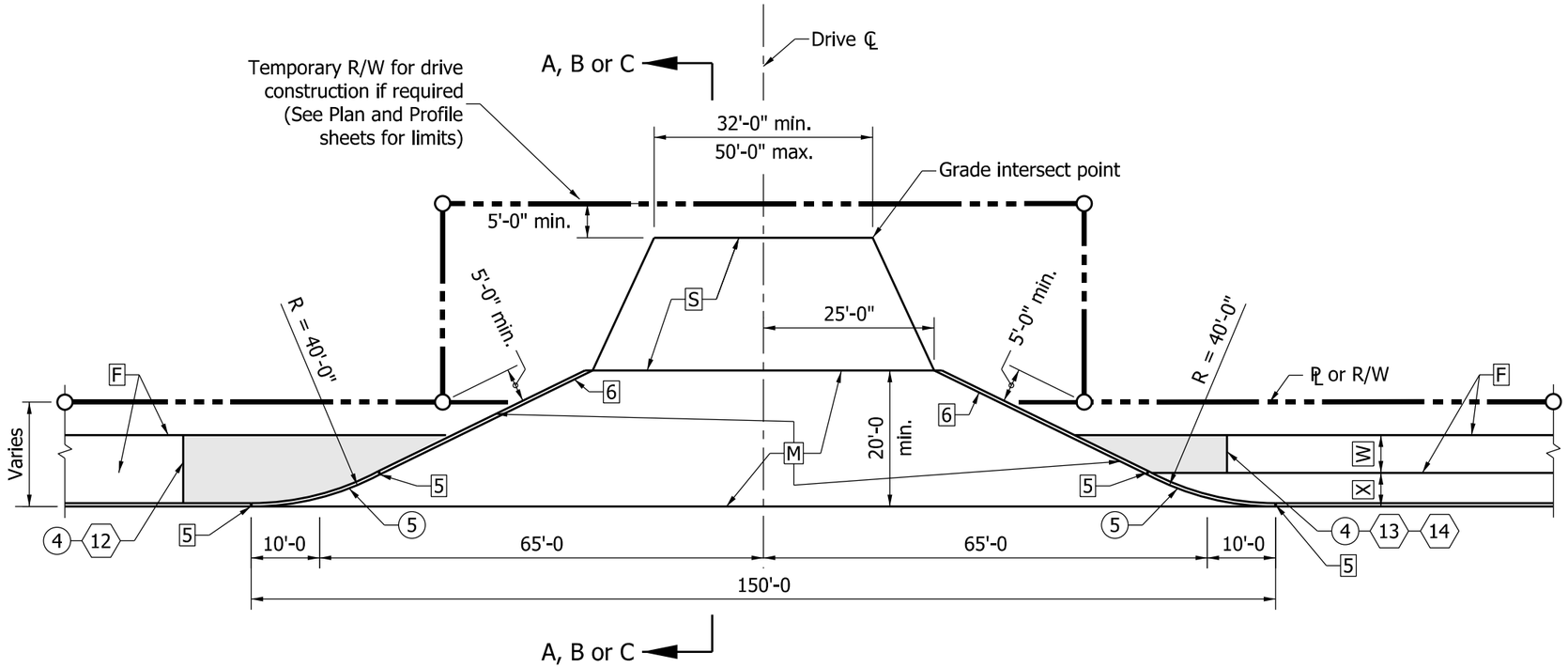

PLAN VIEW

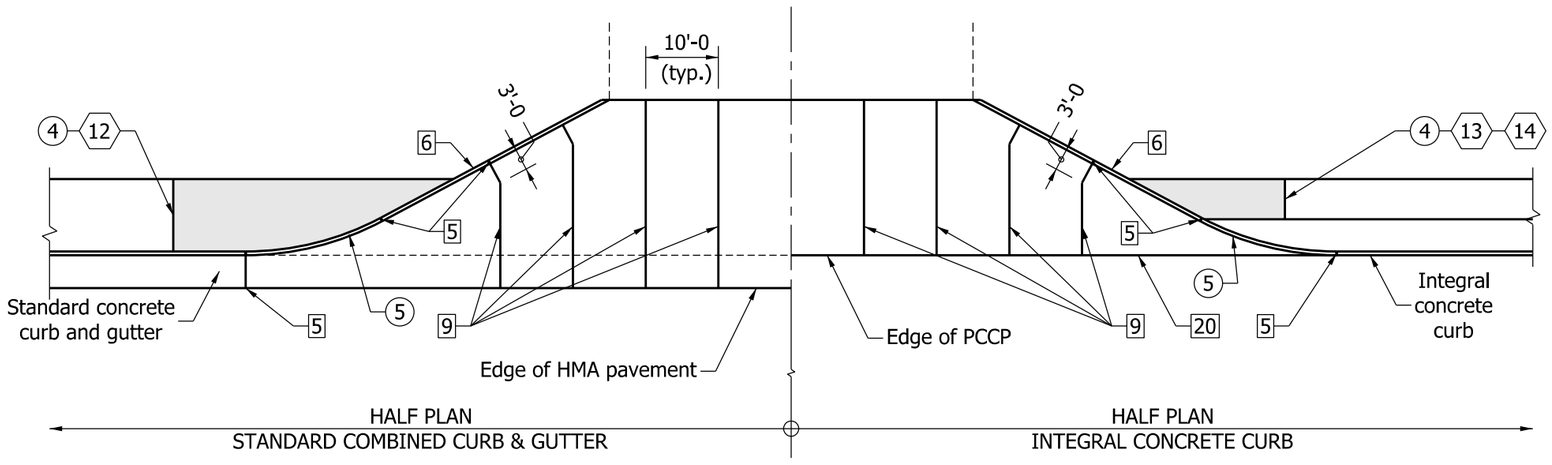

JOINT PLACEMENT DETAIL FOR PCCP DRIVES

NOTES:

1. See Standard Drawings E 610-DRIV-13 for General Notes and additional Legend.
2. See Standard Drawing E 610-DRIV-12 for sections A-A, B-B and C-C.
3. Joint Placement Detail should be used with Class I, III and VII drives.

(4) See Standard Drawing E 604-SDWK-01 or E 604-SDWK-02 for sidewalk elevation transition details.

(5) See Standard Drawing E 610-DRIV-16 for details and corners.

6. See Standard Drawing 503-CCPJ-02 for longitudinal joint details.

LEGEND

[M] HMA for Approaches:
165#/syd HMA Surface Type B on
275#/syd HMA Intermediate Type B on
880#/syd HMA base, Type B on
subgrade treatment Type IIIA
or
PCCP for Approaches, 9 in., on
subgrade treatment Type IIIA

Sidewalk elevation transition

[S] For type and thickness equivalent to surface in place, see plans.

INDIANA DEPARTMENT OF TRANSPORTATION

CLASS VII DRIVE AND
JOINT PLACEMENT DETAIL

SEPTEMBER 2012

STANDARD DRAWING NO. E 610-DRIV-07

RICHARD L. VanCLEAVE REGISTERED No. 9750 STATE OF INDIANA PROFESSIONAL ENGINEER

/s/ Richard L. VanCleave 09/04/12
SUPERVISOR, ROADWAY STANDARDS DATE

/s/ Mark A. Miller 09/04/12
CHIEF ENGINEER DATE

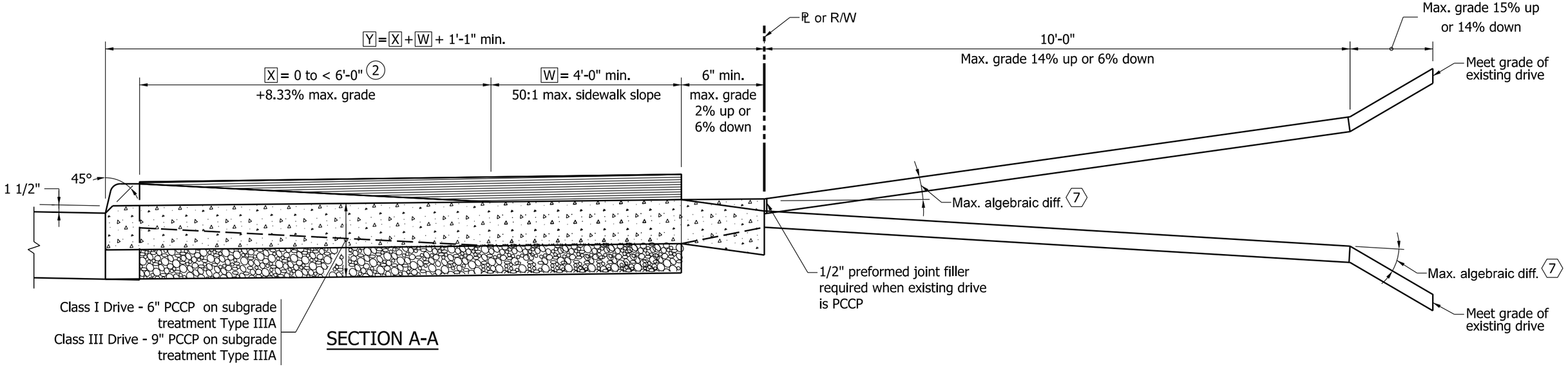

SECTION A-A

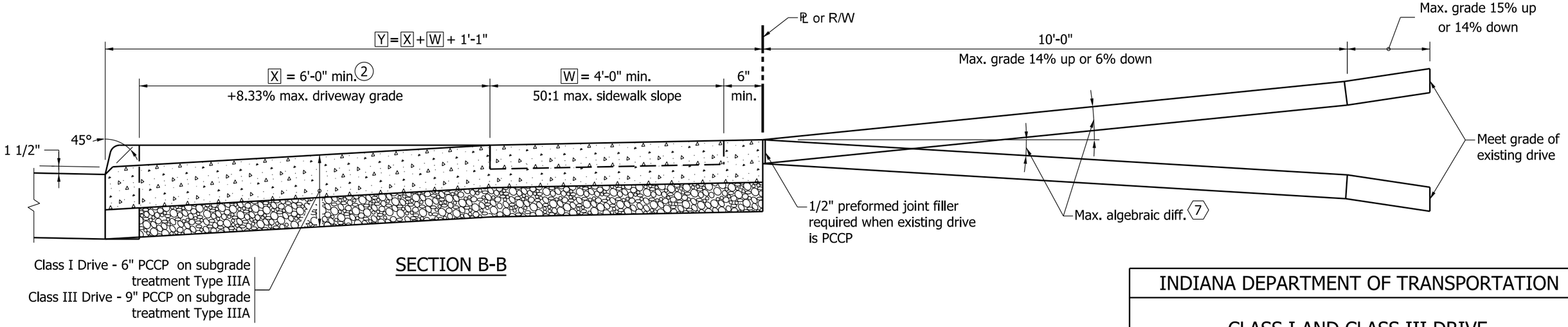

SECTION B-B

NOTES:

(2) The limits for X are based on a 6" curb height. For other curb heights, the limits for X shall be adjusted.

3. See Standard Drawing E 604-SDWK-01 or E 604-SDWK-02 for sidewalk elevation transition details.

4. See Standard Drawing E 610-DRIV-13 for General Notes.

LEGEND

W = Width of sidewalk

X = Distance between back face of curb to sidewalk.

Y = Distance from front face of curb to ℄ or R/W.

= Sidewalk elevation transition section view.

= PCCP

INDIANA DEPARTMENT OF TRANSPORTATION

CLASS I AND CLASS III DRIVE GRADE PROFILES

SEPTEMBER 2010

STANDARD DRAWING NO. E 610-DRIV-08

RICHARD L. VanCLEAVE REGISTERED No. 9750 STATE OF INDIANA PROFESSIONAL ENGINEER

DESIGN STANDARDS ENGINEER

/s/ Richard L. VanCleave 09/01/10
DESIGN STANDARDS ENGINEER DATE

/s/ Mark A. Miller 09/01/10
CHIEF HIGHWAY ENGINEER DATE

Notes:

1. See Standard Drawing E 610-DRIV-02 for Class II Drive details.
2. See Standard Drawing E 610-DRIV-04 for Class IV Drive details.
3. See Standard Drawing E 610-DRIV-13 for General Notes.

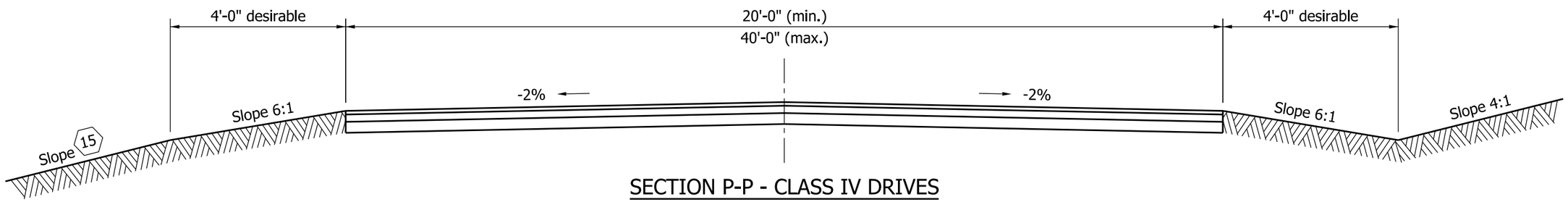

SECTION P-P - CLASS IV DRIVES

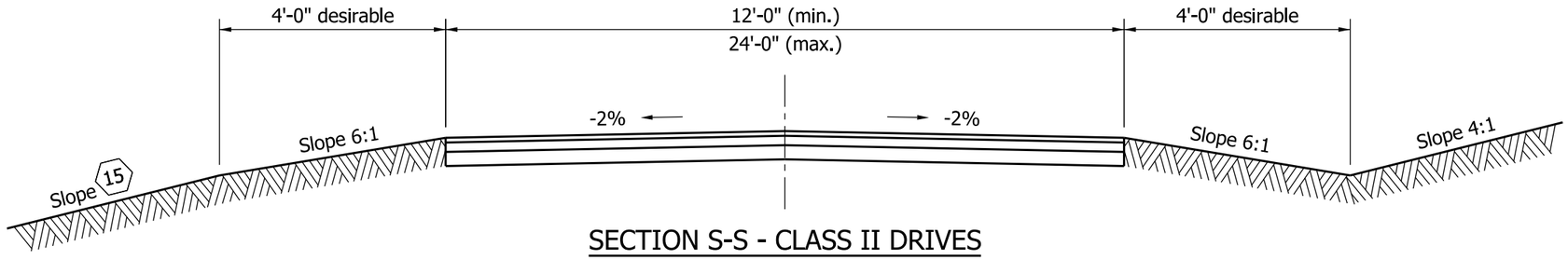

SECTION S-S - CLASS II DRIVES

INDIANA DEPARTMENT OF TRANSPORTATION

CLASS II AND CLASS IV
SECTIONS

SEPTEMBER 2010

STANDARD DRAWING NO. E 610-DRIV-09

RICHARD L. VanCLEAVE
REGISTERED
No. 9750
STATE OF INDIANA
PROFESSIONAL ENGINEER

DESIGN STANDARDS ENGINEER

/s/ Richard L. VanCleave 09/01/10
DESIGN STANDARDS ENGINEER DATE

/s/ Mark A. Miller 09/01/10
CHIEF HIGHWAY ENGINEER DATE

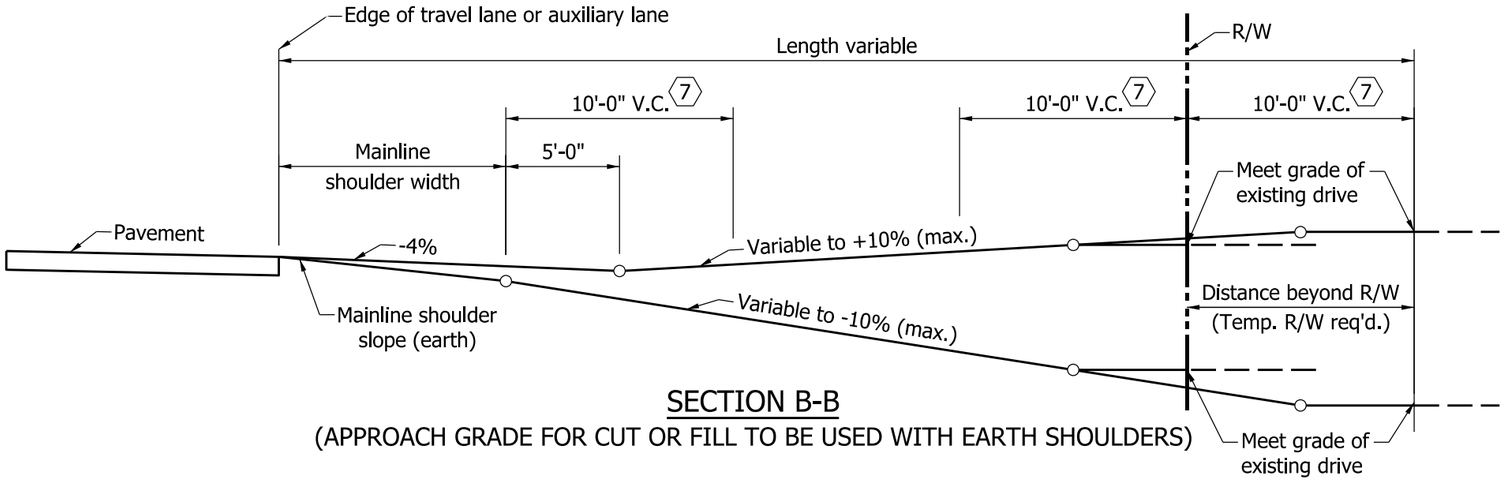

SECTION B-B

(APPROACH GRADE FOR CUT OR FILL TO BE USED WITH EARTH SHOULDERS)

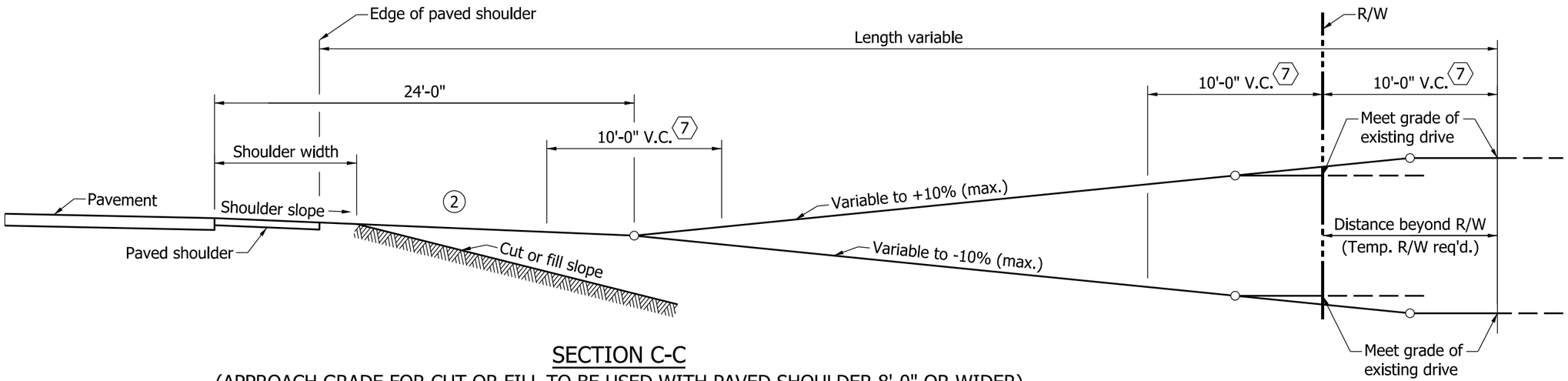

SECTION C-C

(APPROACH GRADE FOR CUT OR FILL TO BE USED WITH PAVED SHOULDER 8'-0" OR WIDER)

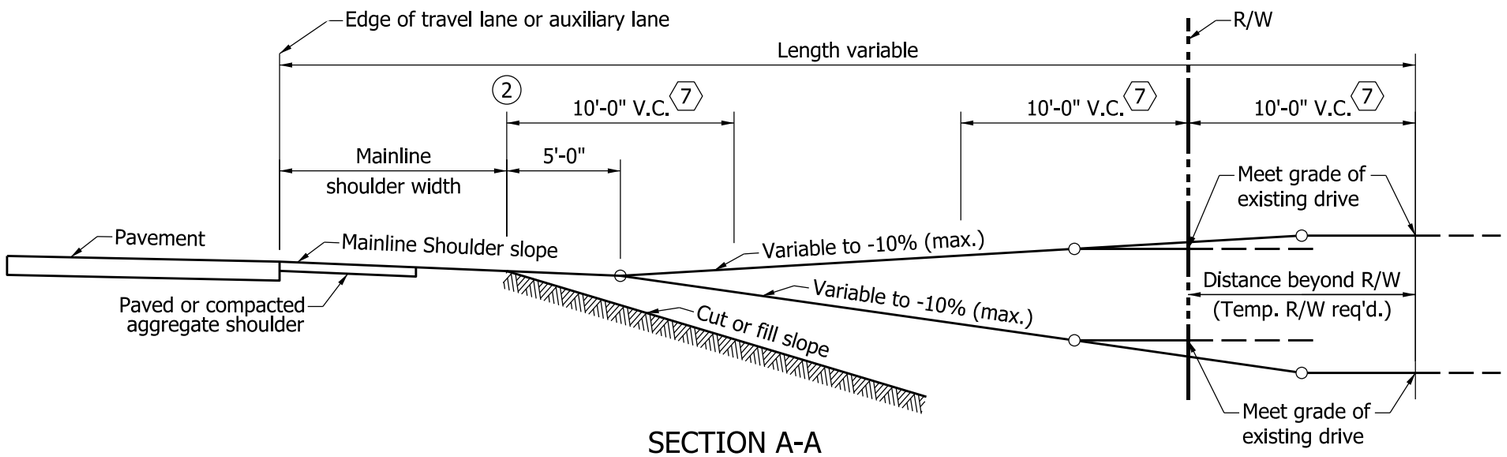

SECTION A-A

(APPROACH GRADE FOR CUT OR FILL TO BE USED WITH LESS THAN 8'-0" WIDTH PAVED OR COMPACTED AGGREGATE SHOULDERS)

Notes:

1. See Standard Drawing E 610-DRIV-02, -04 and -05 for location of Sections A-A, B-B and C-C.

(2) Where physical restrictions limit the space available for the construction of a drive from a roadway in an embankment section the downgrade breakpoint of the drive may begin at the edge of the shoulder without a crest vertical curve if the algebraic difference in grades meets the criteria in Note 7 on Standard Drawing E 610-DRIV-13.

INDIANA DEPARTMENT OF TRANSPORTATION

CLASS II, IV & V DRIVES APPROACH GRADES

SEPTEMBER 2010

STANDARD DRAWING NO. E 610-DRIV-10

RICHARD L. VanCLEAVE REGISTERED No. 9750 STATE OF INDIANA PROFESSIONAL ENGINEER

DESIGN STANDARDS ENGINEER

/s/ Richard L. VanCleave 09/01/10
DESIGN STANDARDS ENGINEER DATE

/s/ Mark A. Miller 09/01/10
CHIEF HIGHWAY ENGINEER DATE

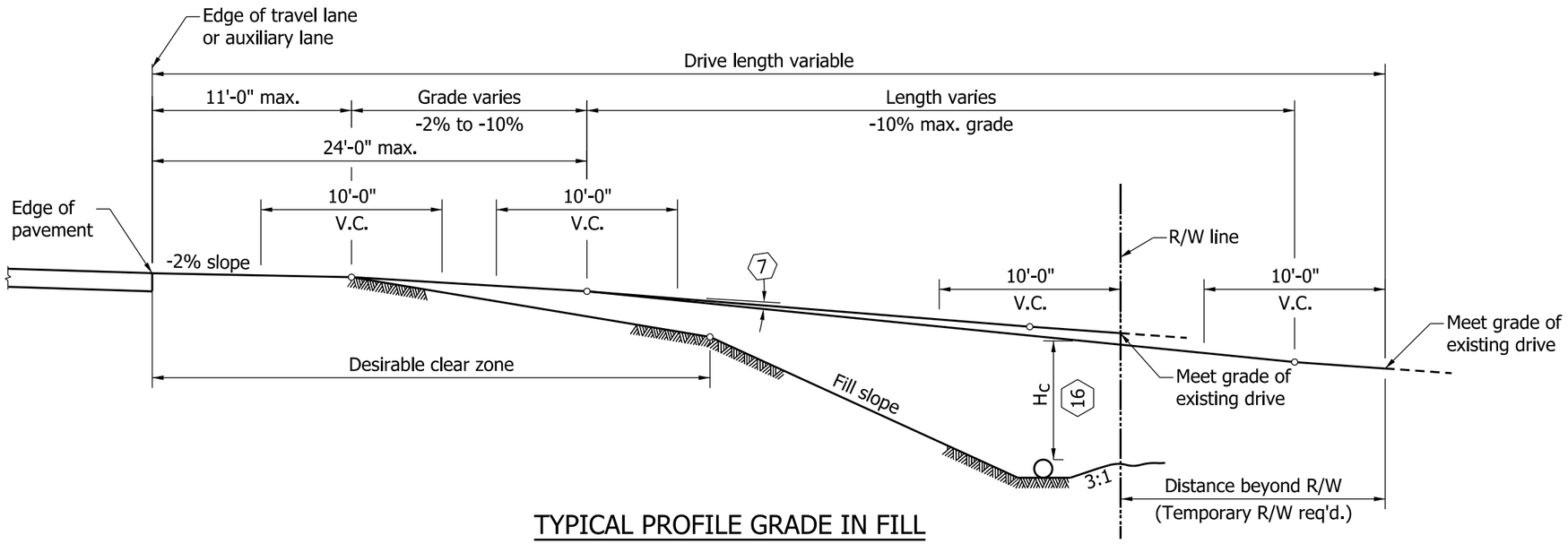

TYPICAL PROFILE GRADE IN FILL

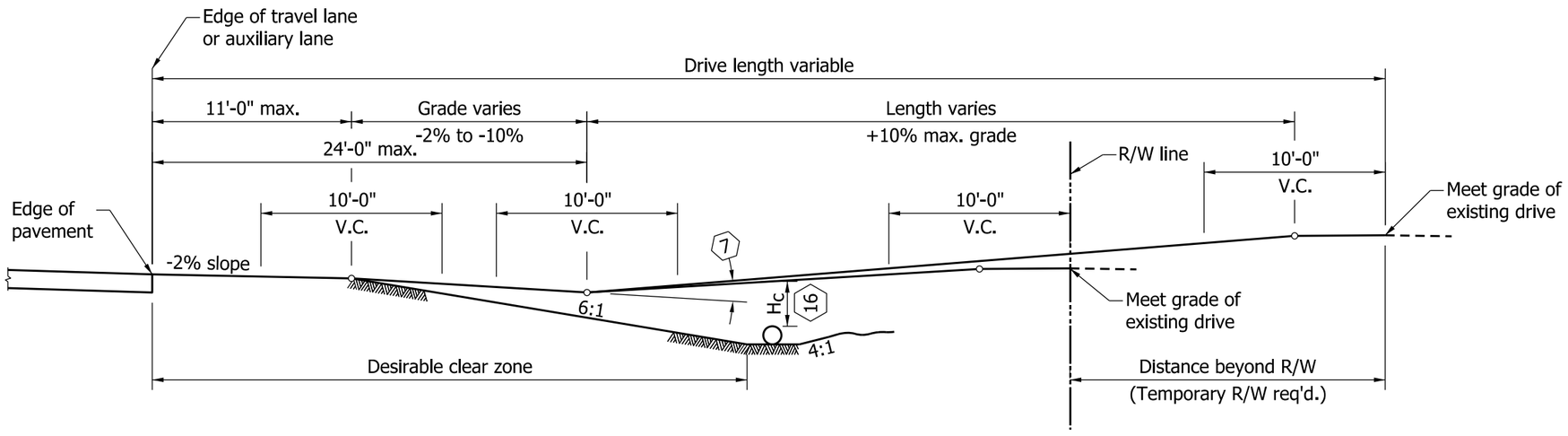

TYPICAL PROFILE GRADE IN CUT

NOTES

1. See Standard Drawing E 610-DRIV-06 for plan and sections of Class VI Drive.
2. See Standard Drawings E 610-DRIV-13 for General Notes.

INDIANA DEPARTMENT OF TRANSPORTATION

CLASS VI DRIVE
TYPICAL PROFILE GRADES

SEPTEMBER 2010

STANDARD DRAWING NO. E 610-DRIV-11

RICHARD L. VanCLEAVE
REGISTERED
No. 9750
STATE OF INDIANA
PROFESSIONAL ENGINEER

DESIGN STANDARDS ENGINEER

/s/ Richard L. VanCleave 09/01/10
DESIGN STANDARDS ENGINEER DATE

/s/ Mark A. Miller 09/01/10
CHIEF HIGHWAY ENGINEER DATE

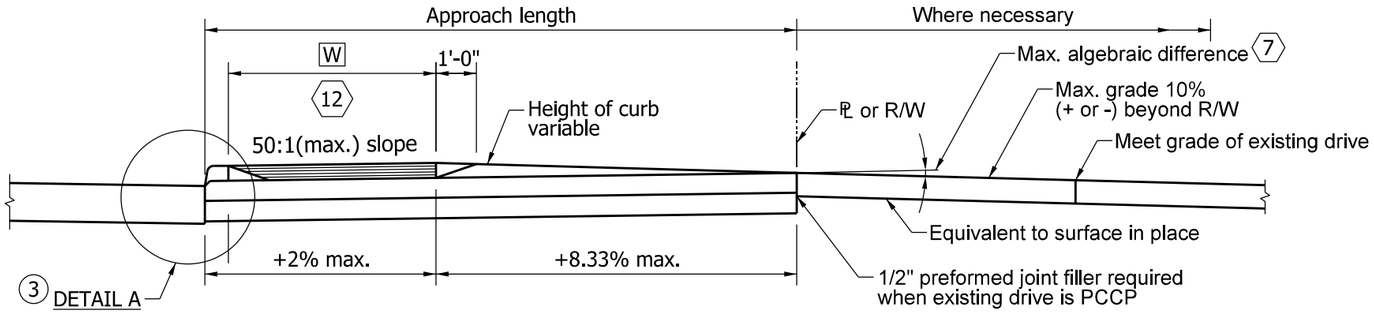

SECTION A-A

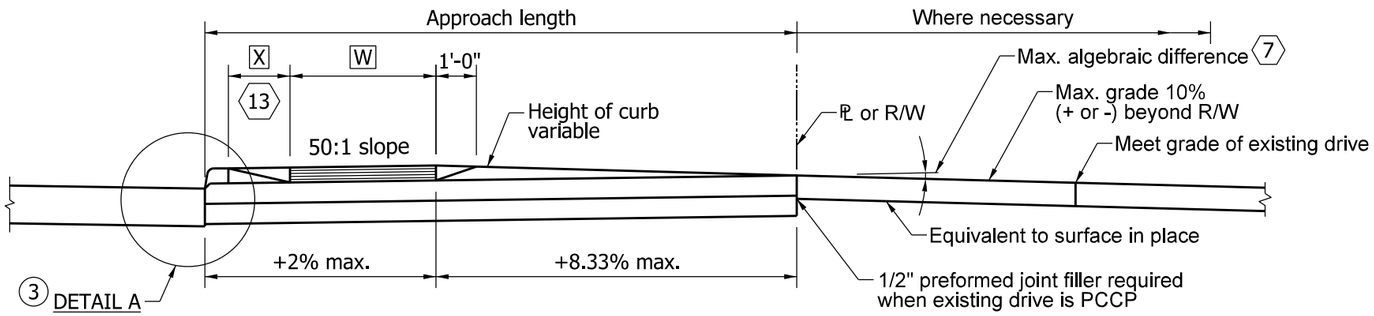

SECTION B-B

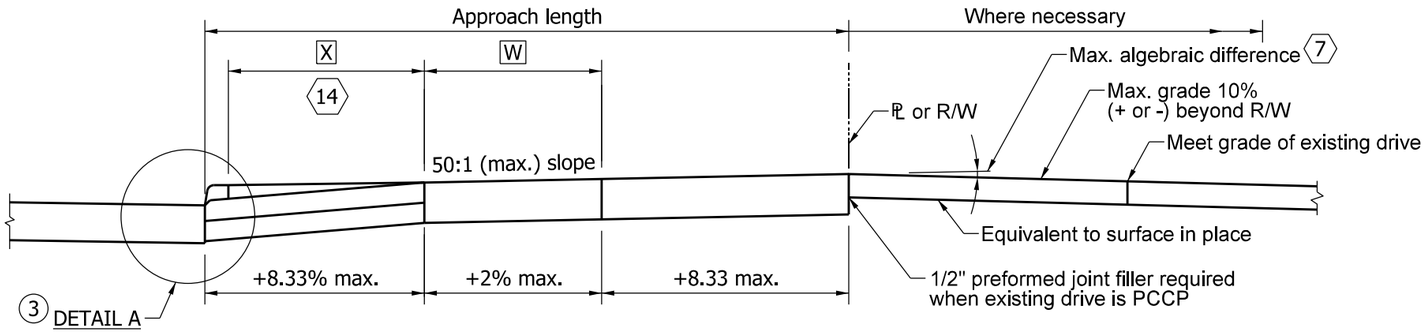

SECTION C-C

NOTES

1. See Standard Drawing E 610-DRIV-07 for plan of Class VII Drive.
2. See Standard Drawings E 610-DRIV-13 for General Notes.

(3) See Standard Drawing E 610-DRIV-16 for keyway joint shown in Detail A and for joint placement and corner reinforcement.

INDIANA DEPARTMENT OF TRANSPORTATION

CLASS VII DRIVE
PROFILE GRADE

SEPTEMBER 2010

STANDARD DRAWING NO. E 610-DRIV-12

RICHARD L. VanCLEAVE REGISTERED No. 9750 STATE OF INDIANA PROFESSIONAL ENGINEER

DESIGN STANDARDS ENGINEER

/s/ Richard L. VanCleave 09/01/10
DESIGN STANDARDS ENGINEER DATE

/s/ Mark A. Miller 09/01/10
CHIEF HIGHWAY ENGINEER DATE

GENERAL NOTES

1. These notes apply to Standard Drawings E 610-DRIV-01 through 12.

(2) If a PCCP approach is Class III or Class IV, the radii shall be constructed using ear construction Type C as detailed on Standard Drawing E 605-ERCN-02.

(3) When the maximum approach grade of ±10% does not meet the grade of the existing drive before the R/W line, the approach grade of ±10% shall extend beyond the R/W to the point of intersection with the existing driveway grade. Construction beyond the R/W line shall be done in temporary R/W.

(4) The appropriate pipe end treatment should be provided for pipes located either inside the clear zone or outside the clear zone.

(7) The maximum algebraic difference in grades shall not exceed 8% for crested grade nor 12% for sagged grades for Types I and III drives, nor 11% for crested grade and 14% for sagged grades for Types II, IV, and V drives.

(8) The minimum driveway pavement sections for Class III, IV, VI and VII Drives have been designed for 400 trucks per day. If the truck traffic count is greater than 400 per day, the required pavement section shall be as shown elsewhere on the plans.

11. See Standard Drawing E 610-DRIV-14 for shoulder treatment at driveways.

(12) Curb Ramp Type H, as shown on Standard Drawing E 604-SWCR-09, when the approach is signalized, or a sidewalk elevation transition as shown on Standard Drawing E 604-SDWK-02 shall be used when sidewalk is adjacent to curb.

(13) When X is equal to or greater than 2 ft but less than 6 ft, either a Curb Ramp Type G as shown on Standard Drawing E 604-SWCR-09, when the approach is signalized, or a sidewalk elevation transition as shown on Standard Drawing E 604-SDWK-01 shall be used.

(14) When X is equal to or greater than 6 ft, no curb ramp or sidewalk elevation transition is required unless the curb height is in excess of 6 inches.

(15) Embankment slopes within the mainline clear zone for new construction/reconstruction projects or within the obstruction-free zone for 3R projects should be as shown in the table on Standard Drawing E 610-PRAP-04. Outside the clear zone or the obstruction-free zone, the embankment slopes should desirably be 4:1 but not steeper than 3:1.

(16) H_C - earth cover over culvert shall be 1 foot or greater.

LEGEND

[5] 1/2 in. preformed joint filler

[6] Monolithic curb for PCCP Approaches or conrete curb and gutter for HMA for Approaches.

[9] Longitudinal joint

[F] Concrete sidewalk

[S] For type and thickness equivalent to surface in place, see plans.

[20] Keyway construction joint

[X] = Distance between back face of curb and sidewalk.

[W] = Width of sidewalk

PCCP

Curb ramp, if signalized, or typically, sidewalk elevation transition.

Curb ramp or sidewalk elevation transition section view.

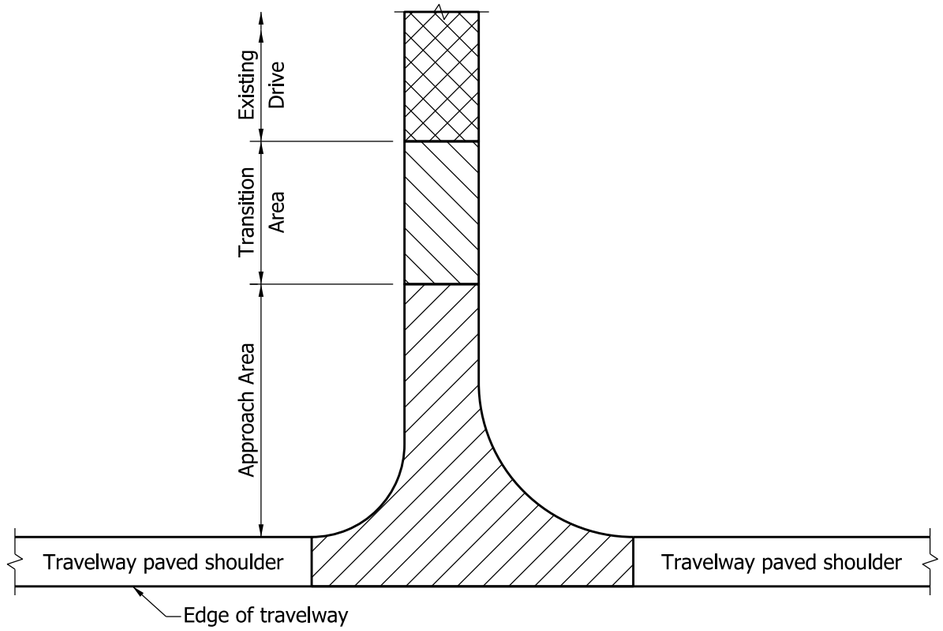

TYPE I, II, III, IV, VI AND VII DRIVES

NOTES

1. The pay limits shown hereon generally apply to Type I, II, III, IV, VI and VII Drives as shown on Standard Drawings E 610-DRIV-01, -02, -03, 04, -06 and -07 respectively.

2. Approach Area - HMA for Approaches or PCCP for Approaches. This area typically extends from the edge of an 8 foot or wider paved travelway shoulder to the right of way or property line or within a few feet of the right of way or property line where the new drive meets the grade of the existing drive, depending on the site-specific conditions. Where the travelway paved shoulder width is less than 8 feet, this area will be measured from the edge of travelway.

3. Transition Area - an equivalent pavement section to the existing drive. This area typically extends from the right of way or property line to a point on the property owner's drive where the new drive grade can match the existing drive grade.

INDIANA DEPARTMENT OF TRANSPORTATION

DRIVES
GENERAL NOTES AND LEGEND

SEPTEMBER 2010

STANDARD DRAWING NO. E 610-DRIV-13

RICHARD L. VanCLEAVE REGISTERED No. 9750 STATE OF INDIANA PROFESSIONAL ENGINEER

DESIGN STANDARDS ENGINEER

/s/ Richard L. VanCleave 09/01/10
DESIGN STANDARDS ENGINEER DATE

/s/ Mark A. Miller 09/01/10
CHIEF HIGHWAY ENGINEER DATE

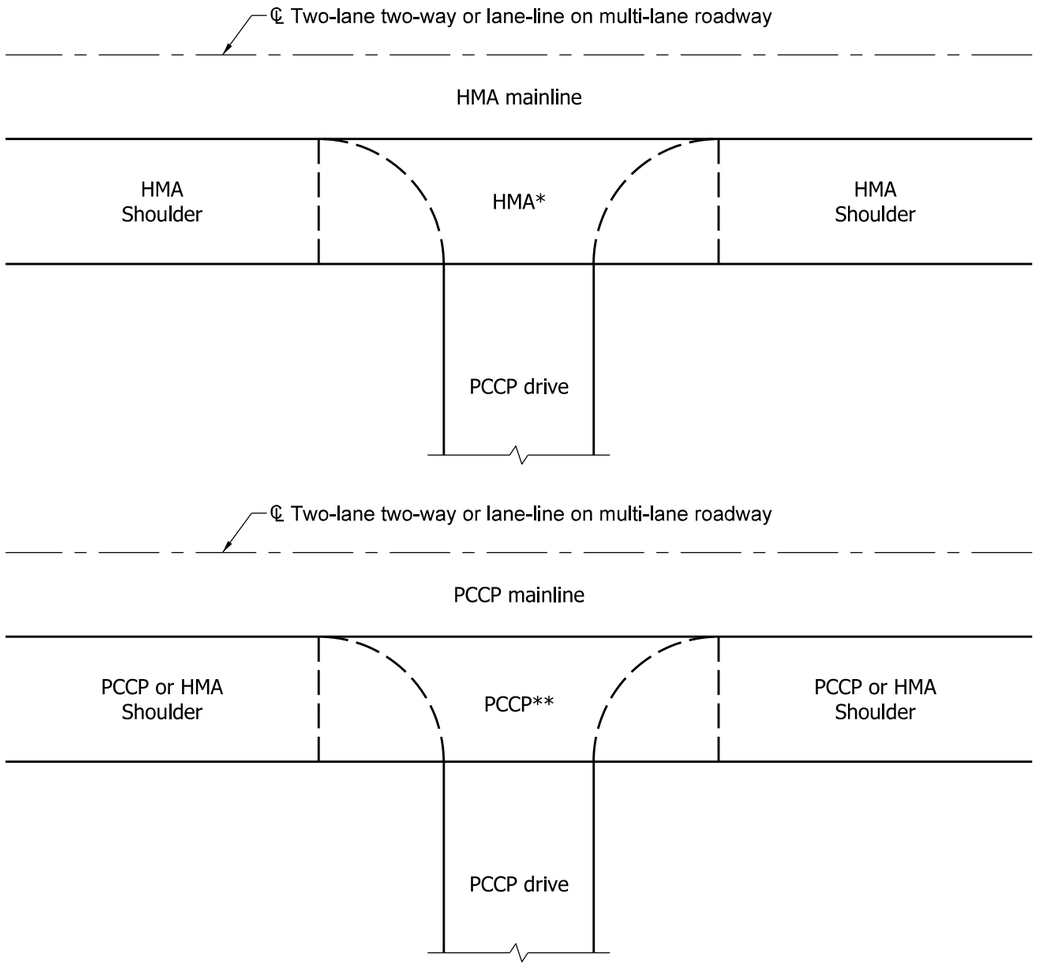

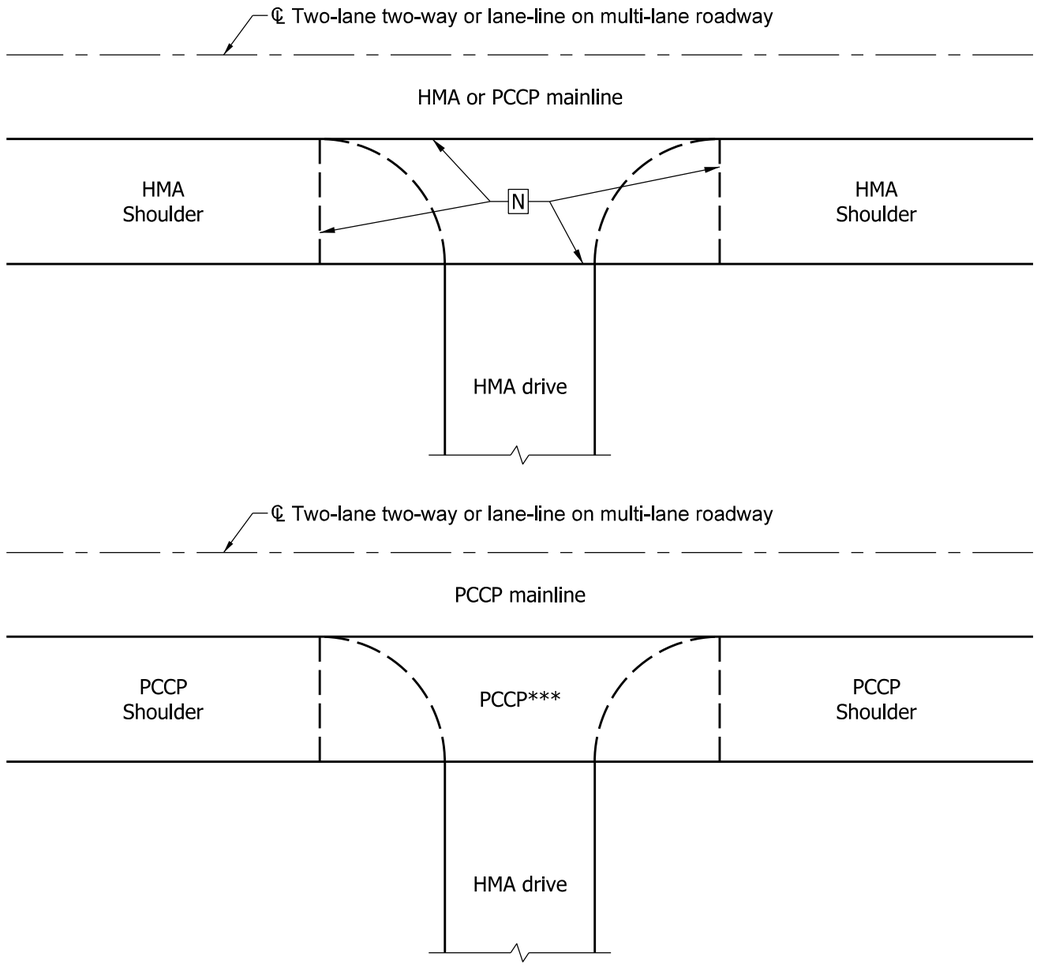

LEGEND

[N] Greater thickness of drive or shoulder section

* Mainline pavement section

** Greater thickness of PCCP drive or PCCP shoulder

*** Same section as mainline shoulder

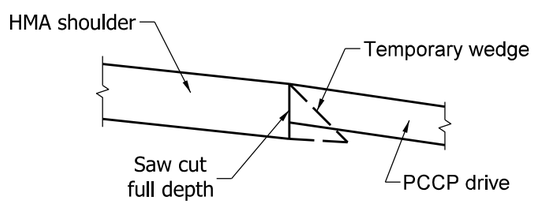

TEMPORARY EDGE OF HMA SHOULDER
(TREATMENT WHERE PCCP DRIVE IS TO BE CONSTRUCTED)

INDIANA DEPARTMENT OF TRANSPORTATION

SHOULDER TREATMENT
AT DRIVEWAYS

SEPTEMBER 2010

STANDARD DRAWING NO. E 610-DRIV-14

RICHARD L. VanCLEAVE REGISTERED No. 9750 STATE OF INDIANA PROFESSIONAL ENGINEER

DESIGN STANDARDS ENGINEER

/s/ Richard L. VanCleave 09/01/10
DESIGN STANDARDS ENGINEER DATE

/s/ Mark A. Miller 09/01/10
CHIEF HIGHWAY ENGINEER DATE

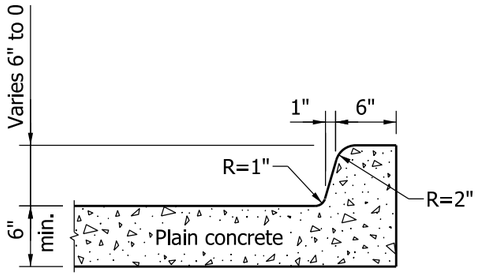

MONOLITHIC CURB

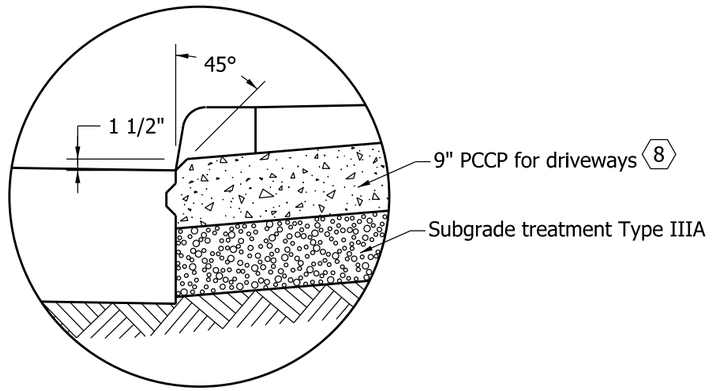

DETAIL A

NOTES

1. See Standard Drawing E 610-DRIV-07 for plan and Standard Drawing E 610-DRIV-12 for profile of Class VII drive.
2. See Standard Drawings E 610-DRIV-13 for General Notes and additional Legend.
3. See Standard Drawing E 610-DRIV-07 for keyway joint shown in Detail A and for joint placement and corner reinforcement.
4. See Standard Drawing E 605-ERCN-01 for ear construction Type A. See Standard Drawing E 605-ERCN-02 for ear construction Type B.

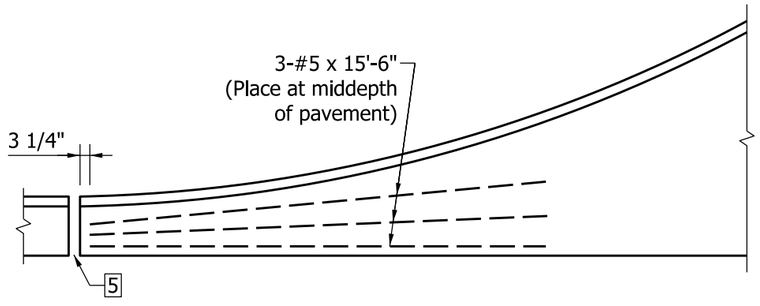

COMBINED CURB & GUTTER

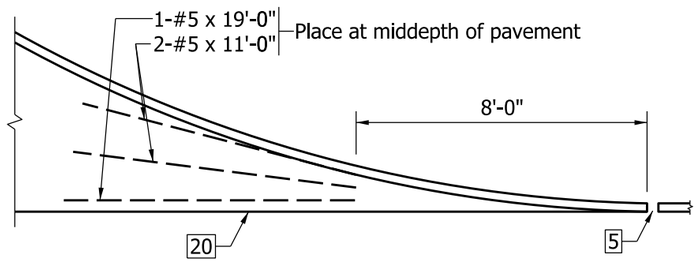

INTEGRAL CONCRETE CURB

TYPICAL CORNER REINFORCING

INDIANA DEPARTMENT OF TRANSPORTATION

CLASS VII DRIVE
JOINT PLACEMENT AND CORNERS

SEPTEMBER 2010

STANDARD DRAWING NO. E 610-DRIV-16

RICHARD L. VanCLEAVE
REGISTERED
No. 9750
STATE OF INDIANA
PROFESSIONAL ENGINEER

DESIGN STANDARDS ENGINEER

/s/ Richard L. VanCleave 09/01/10
DESIGN STANDARDS ENGINEER DATE

/s/ Mark A. Miller 09/01/10
CHIEF HIGHWAY ENGINEER DATE

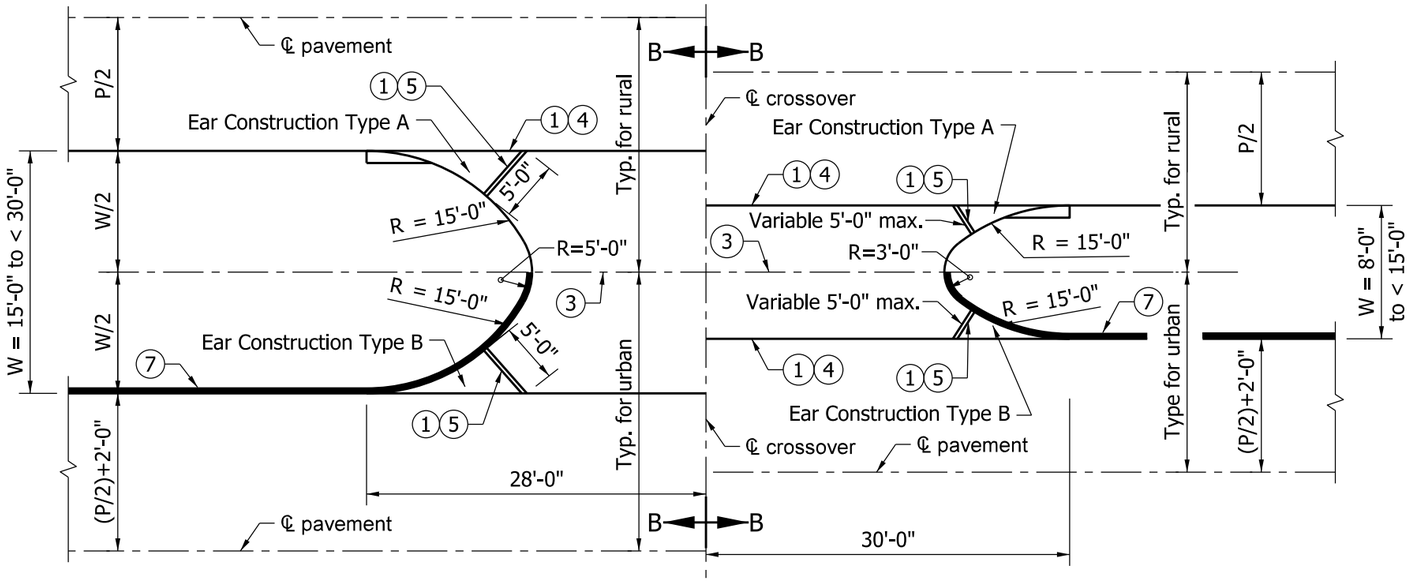

PRIVATE DRIVE CROSSOVER PLAN FOR W = 8'-0" to less than 30'-0"

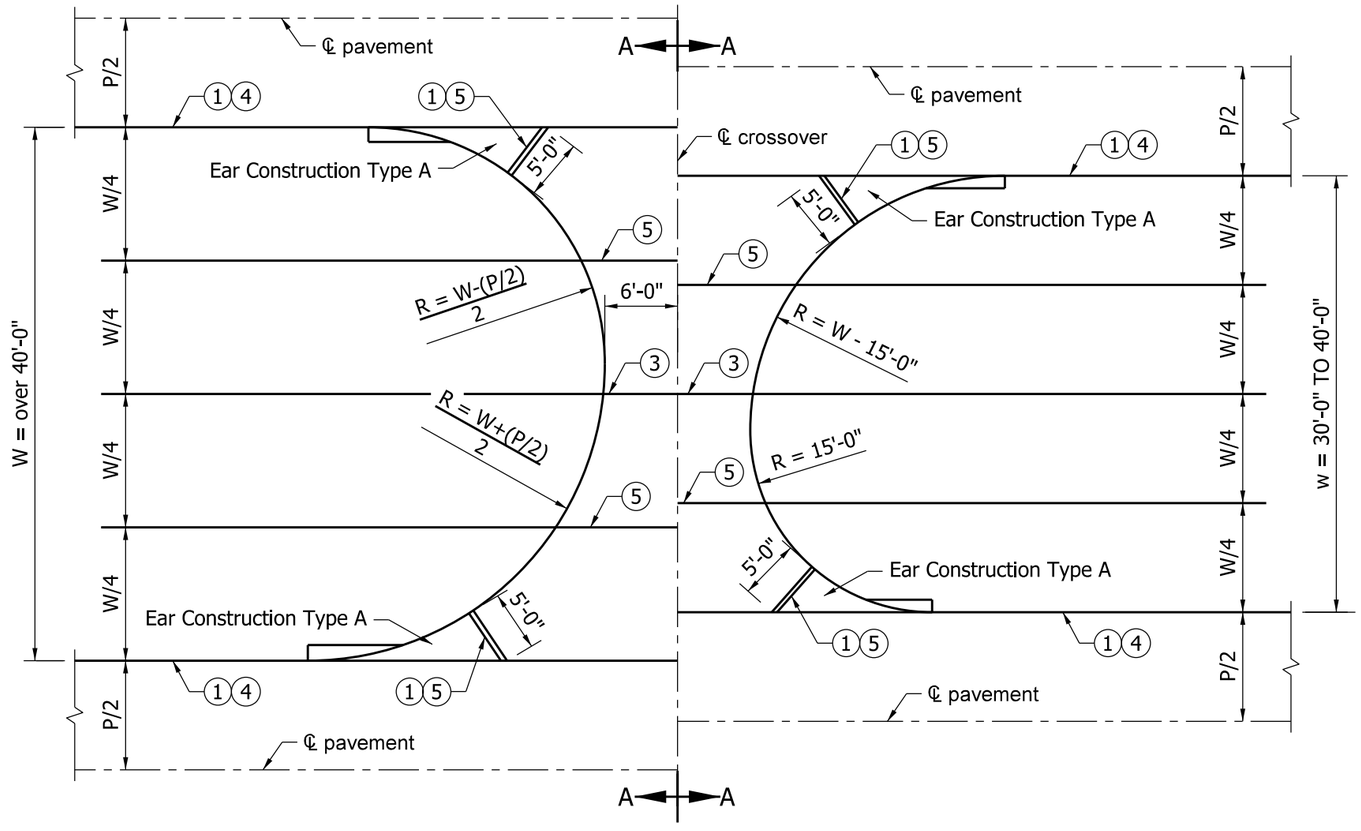

PRIVATE DRIVE CROSSOVER PLAN FOR W = 30'-0" to over 40'-0"

Notes:

(1) Thickened edge

2. See Standard Drawings:
   E 605-ERCN-01 for TYPE "A" Ear Construction
   E 605-ERCN-02 for TYPE "B" Ear Construction
   E 610-DRIV-18 for sections A-A and B-B

(3) Contraction Joint Type D-1, see Standard Drawing E 503-CCPJ-01 for details.

(4) Keyway Construction Joint, see Standard Drawing E 610-DRIV-16 for details.

(5) 1" Preformed Joint Filler.

6. Private drive crossovers shall be constructed of HMA or PCCP as shown on the plans section unless otherwise directed.

(7) Integral Concrete Curb, see Standard Drawing E 605-CCIN-01 for details.

INDIANA DEPARTMENT OF TRANSPORTATION

PRIVATE DRIVE CROSSOVER PLANS

SEPTEMBER 2010

STANDARD DRAWING NO. E 610-DRIV-17

RICHARD L. VanCLEAVE REGISTERED No. 9750 STATE OF INDIANA PROFESSIONAL ENGINEER

DESIGN STANDARDS ENGINEER

/s/ Richard L. VanCleave 09/01/10
DESIGN STANDARDS ENGINEER DATE

/s/ Mark A. Miller 09/01/10
CHIEF HIGHWAY ENGINEER DATE

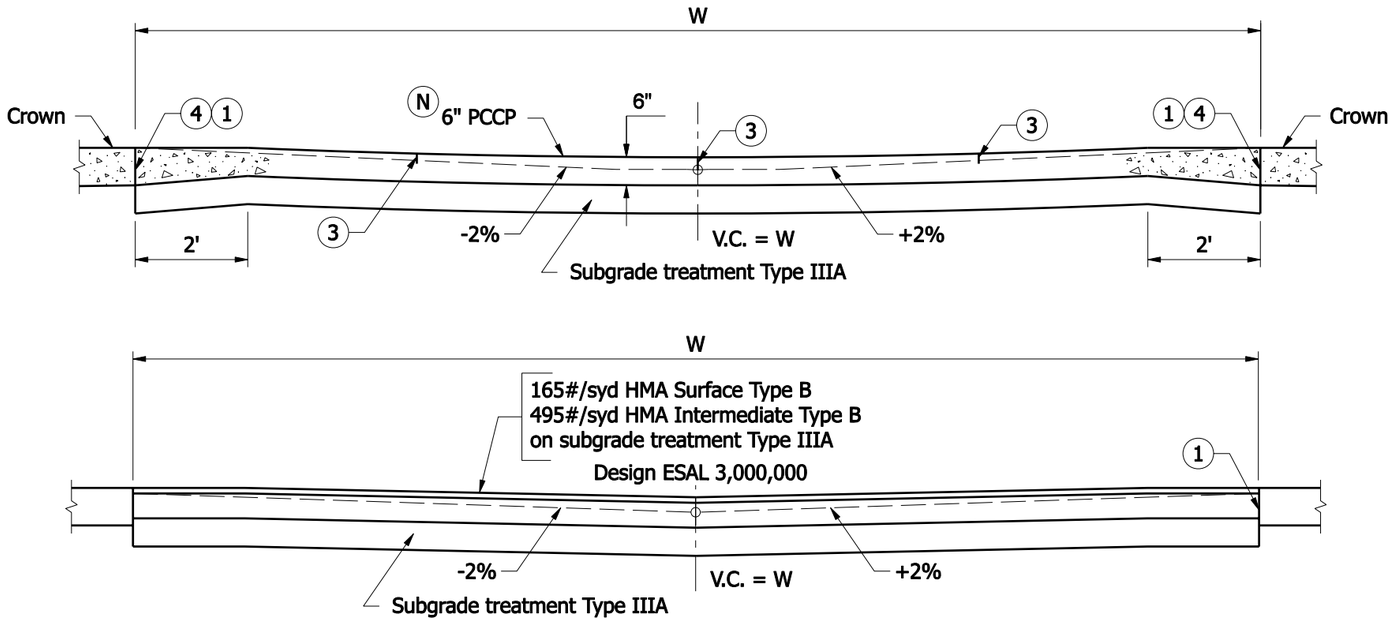

SECTION A-A
TO BE USED WITH CROWN PAVEMENTS.

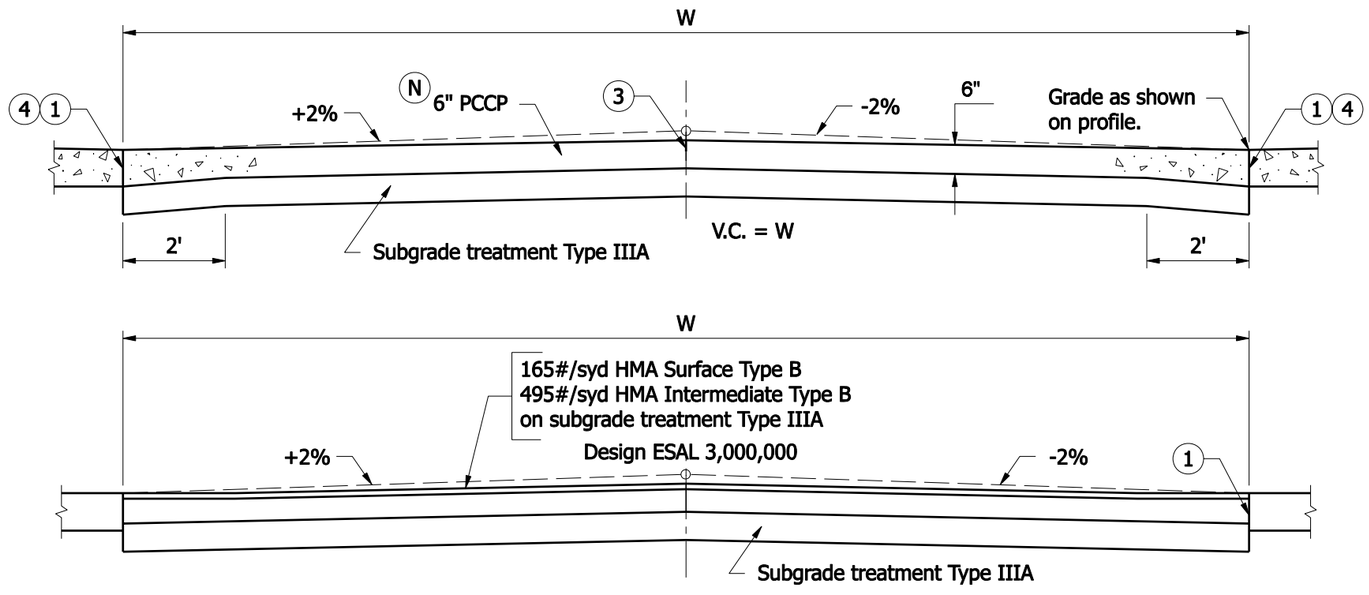

SECTION B-B
TO BE USED WITH 3 in. TILTED PAVEMENTS

NOTES :

(N) Private drive crossover shall be constructed of HMA or PCCP as shown on the plans, unless otherwise directed.

(1) Thickened edge to be same thickness as mainline pavement.

2. For location of cross sections see Standard Drawing E 610-DRIV-17.

(3) Contraction joint type D-1, see Standard Drawing E 501-CCPJ-06 for details, and Standard Drawing E DRIV-17 for spacing.

(4) Keyway construction joint, see Standard Drawing E 610-DRIV-16 for details.

INDIANA DEPARTMENT OF TRANSPORTATION

PRIVATE DRIVE CROSSOVERS CROSS SECTIONS

SEPTEMBER 2007

STANDARD DRAWING NO. E 610-DRIV-18

RICHARD L. VanCLEAVE
REGISTERED
No. 9750
STATE OF INDIANA
PROFESSIONAL ENGINEER

DESIGN STANDARDS ENGINEER

/s/ Richard L. VanCleave 09/04/07
DESIGN STANDARDS ENGINEER DATE

/s/ Mark A. Miller 09/04/07
CHIEF HIGHWAY ENGINEER DATE

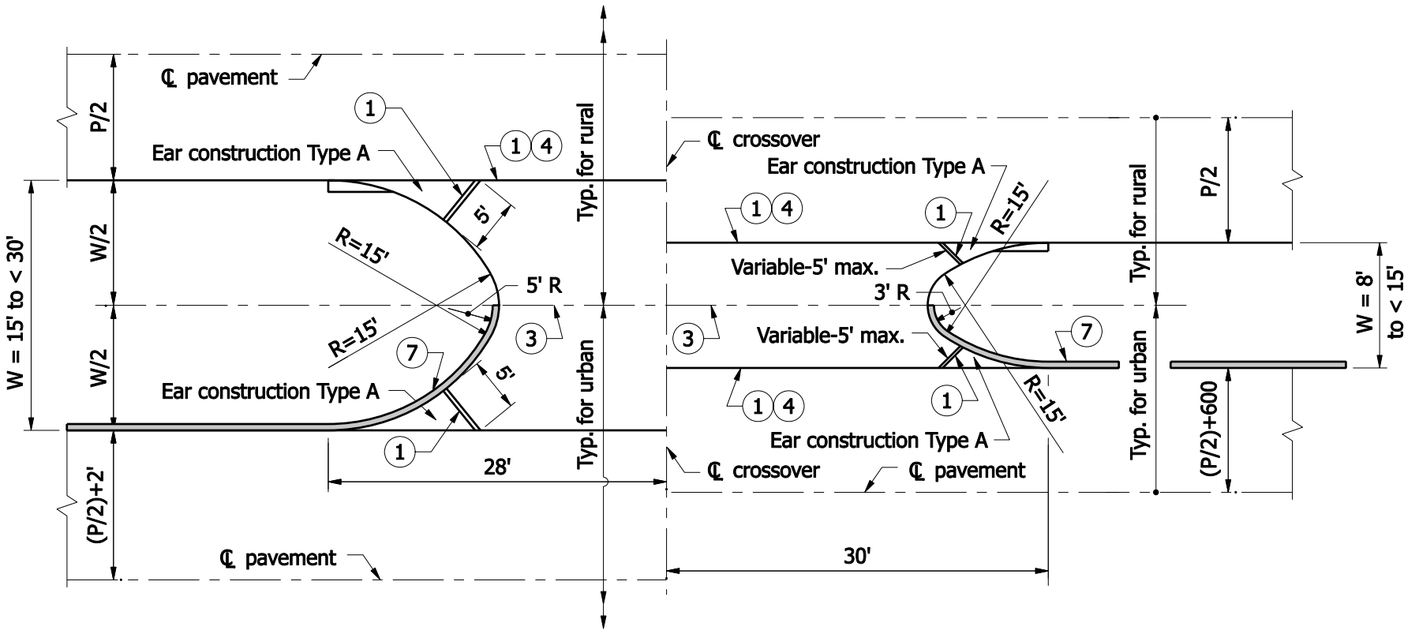

COMMERCIAL DRIVE CROSSOVER PLAN FOR W = 8' to less than 30'

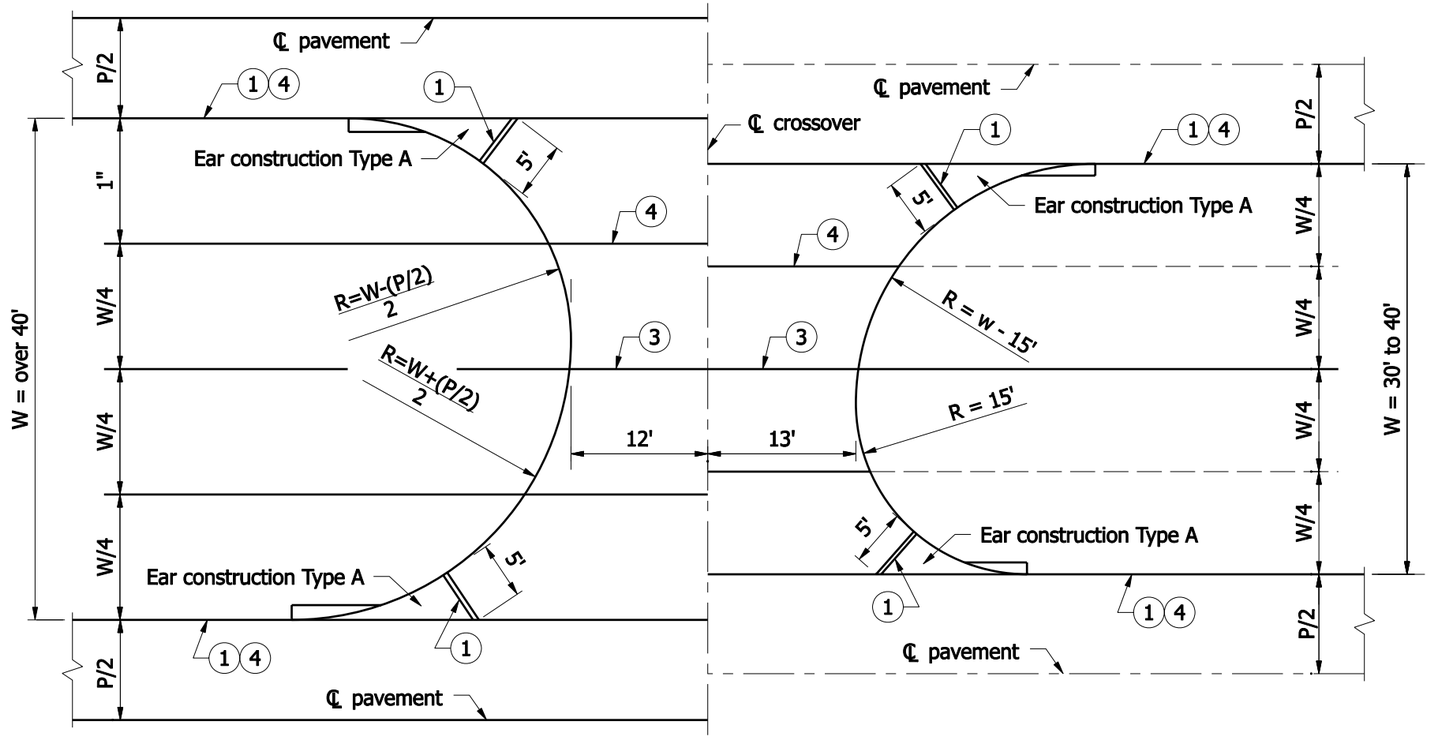

COMMERCIAL DRIVE CROSSOVER PLAN FOR W = 30' to over 40'

NOTES :

(1) Thickened edge

2. See Standard Drawings :
   E 605-ERCN-01 for TYPE "A" ear construction
   E 605-ERCN-02 for TYPE "B" ear construction

(3) Contraction joint type D-1, see Standard Drawing E 503-CCPJ-01 for details.

(4) Keyway construction joint - see Drawing E 610-DRIV-16 for details.

6. Grade for commercial drive crossover shall be the same as for private drive crossover. For cross sections see Standard Drawing E 610-DRIV-18, except the PCCP thickness shall be 9 in.

(7) Integral concrete curb, see Standard Drawing E 605-CCIN-01 for details.

8. Commercial drive crossover shall be constructed of HMA or PCCP as shown on the plans, unless otherwise directed by the Engineer.

INDIANA DEPARTMENT OF TRANSPORTATION

COMMERCIAL DRIVE CROSSOVERS PLANS

SEPTEMBER 2007

STANDARD DRAWING NO. E 610-DRIV-19

RICHARD L. VanCLEAVE REGISTERED No. 9750 STATE OF INDIANA PROFESSIONAL ENGINEER

DESIGN STANDARDS ENGINEER

/s/ Richard L. Van Cleave 09/04/07
DESIGN STANDARDS ENGINEER DATE

/s/ Mark A. Miller 09/04/07
CHIEF HIGHWAY ENGINEER DATE

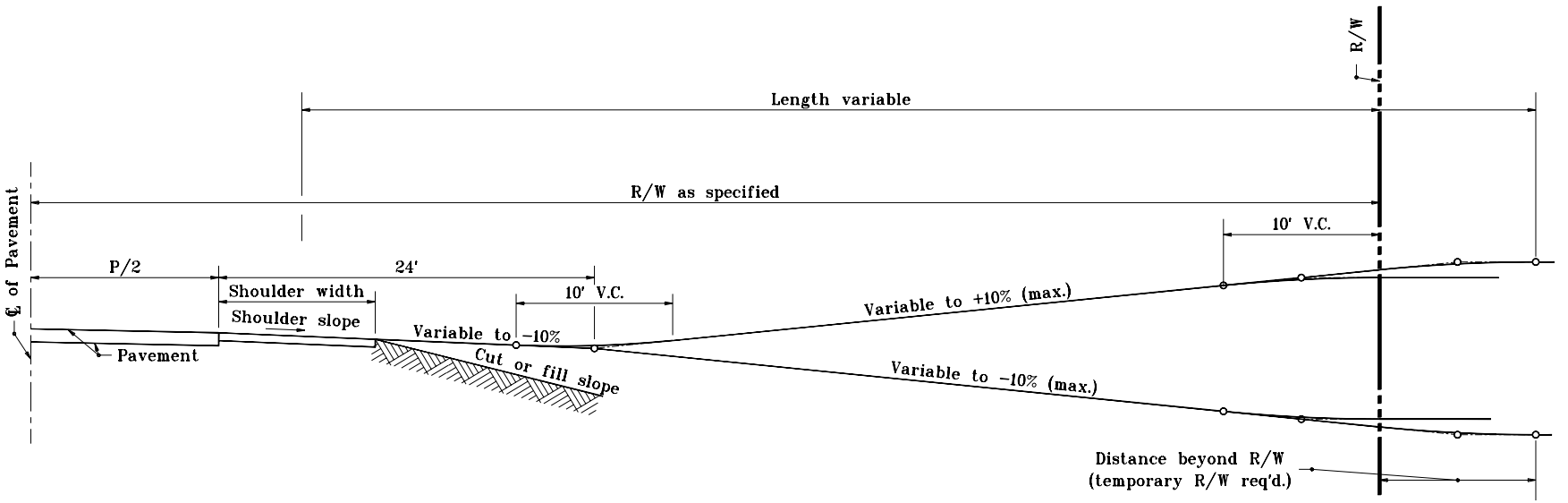

APPROACH GRADE FOR CUT OR FILL
TO BE USED WITH PAVED SHOULDER

INDIANA DEPARTMENT OF TRANSPORTATION

APPROACH GRADE
CUT OR FILL
JANUARY 2000

STANDARD DRAWING NO. **E 610-DRIV-20**

ANTHONY L. UREMOVICH REGISTERED No. 18095 STATE OF INDIANA PROFESSIONAL ENGINEER
DESIGN STANDARDS ENGINEER

/s/ Anthony L. Uremovich — DESIGN STANDARDS ENGINEER — 1-03-00 DATE

/s/ Firooz Zandi — CHIEF HIGHWAY ENGINEER — 1-03-00 DATE

Notes

1. 3 ft. or wider as necessary to feather to existing grade
2. Pavement wedge to be centered on center line of drive.

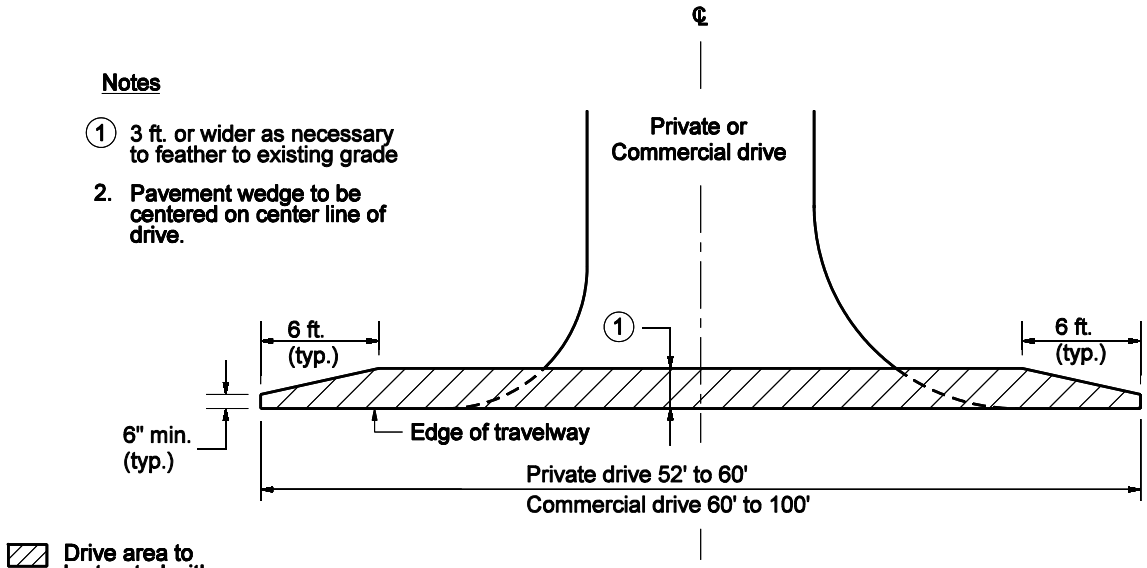

Drive area to be treated with HMA for Approaches

PRIVATE OR COMMERCIAL DRIVE

INDIANA DEPARTMENT OF TRANSPORTATION

PAVEMENT WEDGE LIMITS

MARCH 2004

STANDARD DRAWING NO. E 610-DRIV-21

RICHARD L. VanCLEAVE REGISTERED No. 9750 STATE OF INDIANA PROFESSIONAL ENGINEER

DESIGN STANDARDS ENGINEER

/s/ Richard L.VanCleave 3-01-04
DESIGN STANDARDS ENGINEER DATE

/s/ Richard K.Smutzer 3-01-04
CHIEF HIGHWAY ENGINEER DATE

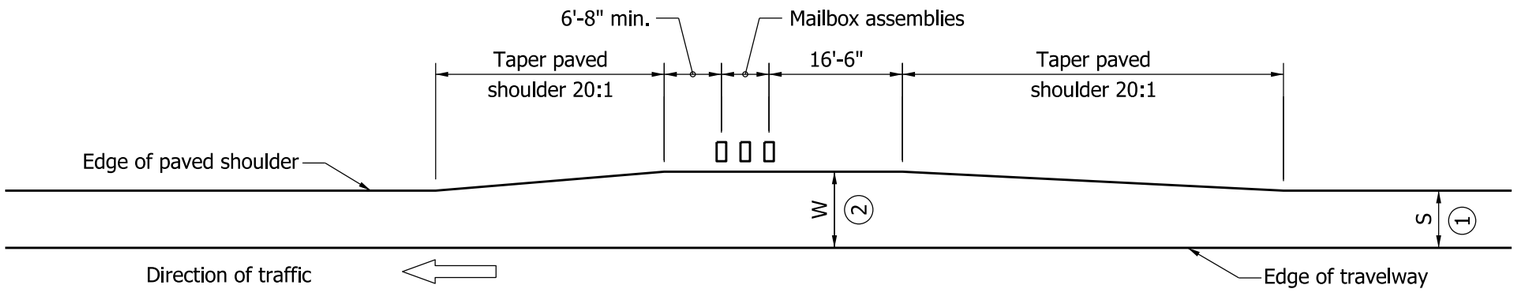

COMBINATION MAILBOX APPROACH & DRIVE
(Mailbox located beyond drive)

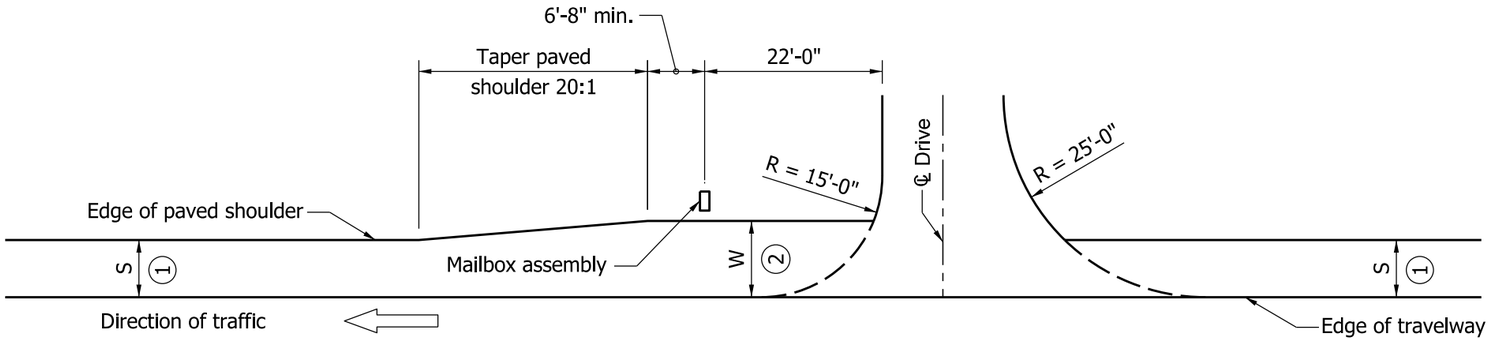

TYPICAL MAILBOX APPROACH

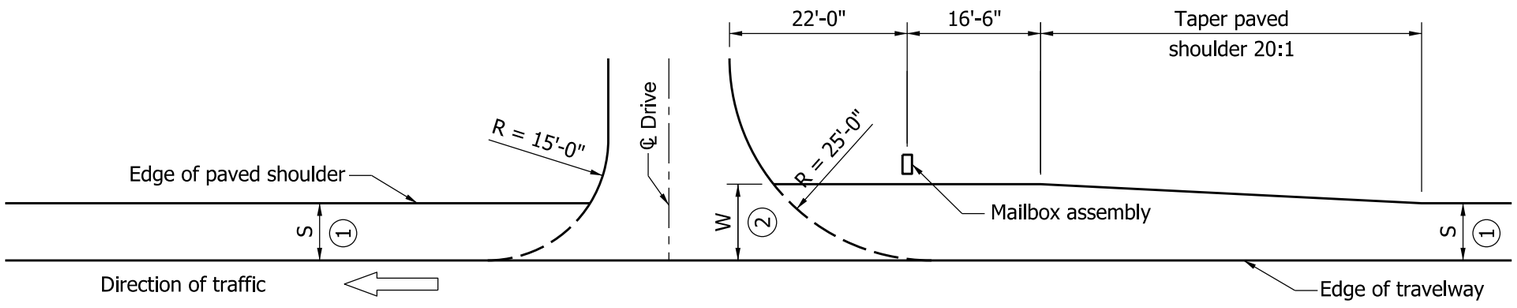

COMBINATION MAILBOX APPROACH & DRIVE
(Mailbox located in advance of drive)

NOTES:

(1) S = Normal width of paved shoulder as shown on plans.

(2) See plans for W

3. Mailbox approach pavement section shall be the same as the shoulder material.

INDIANA DEPARTMENT OF TRANSPORTATION

MAILBOX APPROACHES
HIGH SPEED ROADWAY

SEPTEMBER 2011

STANDARD DRAWING NO. E 610-MBAP-01

RICHARD L. VanCLEAVE
REGISTERED
No. 9750
STATE OF INDIANA
PROFESSIONAL ENGINEER

DESIGN STANDARDS ENGINEER

/s/ Richard L. VanCleave 09/01/11
DESIGN STANDARDS ENGINEER DATE

Mark A. Miller 09/01/11
CHIEF HIGHWAY ENGINEER DATE

NOTES

1. S = Normal width of paved shoulder as shown on plans.
2. See plans for W
3. Mailbox approach pavement section shall be the same as the drive section.

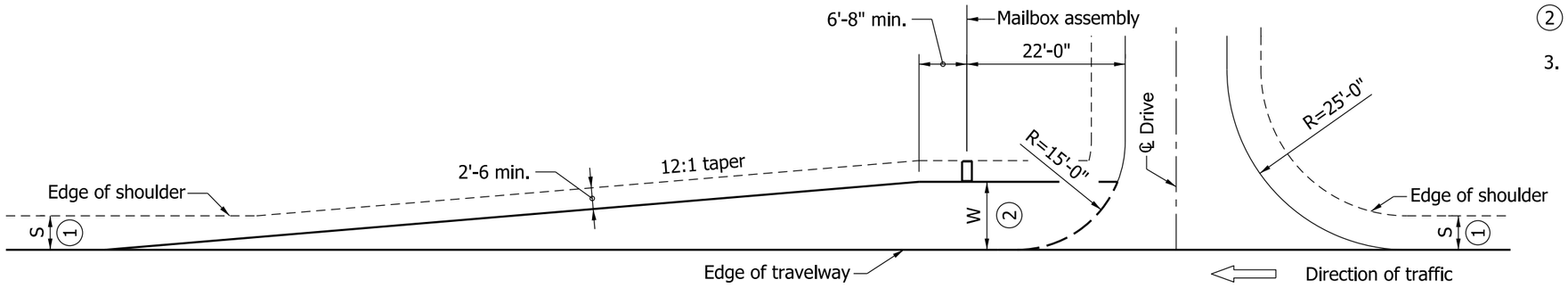

COMBINATION MAILBOX APPROACH & DRIVE
(Mailbox located beyond drive)

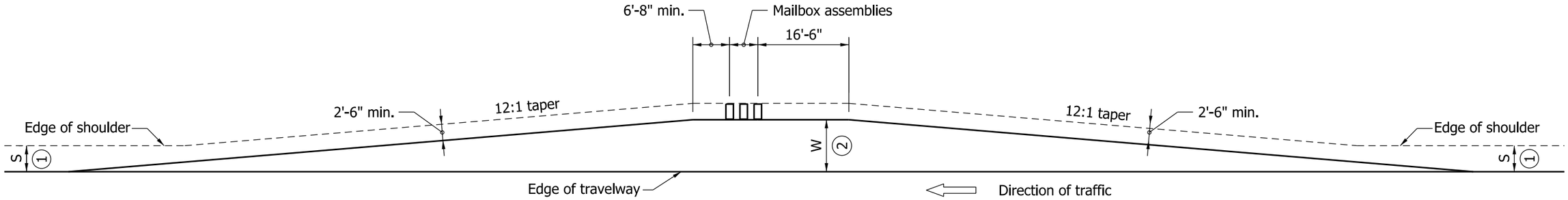

TYPICAL MAILBOX APPROACH

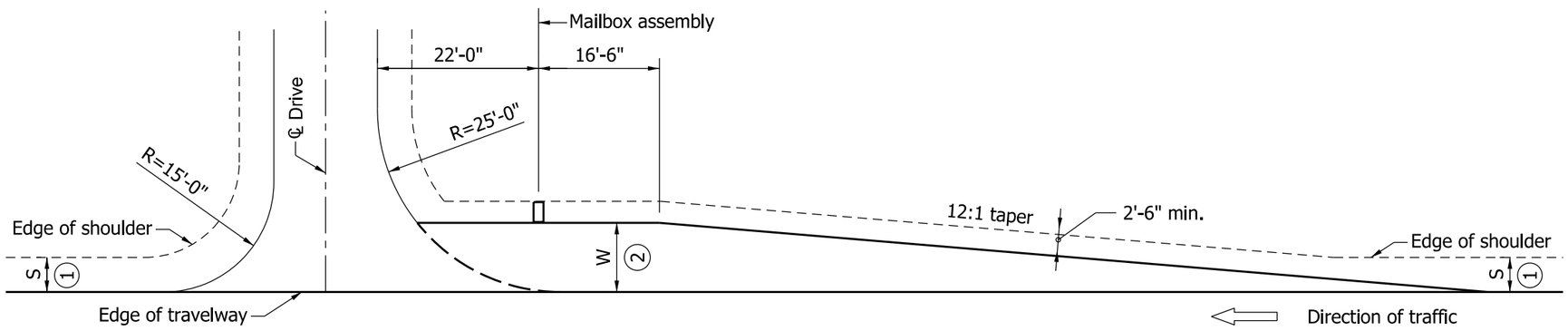

COMBINATION MAILBOX APPROACH & DRIVE
(Mailbox located in advance of drive)

INDIANA DEPARTMENT OF TRANSPORTATION

MAILBOX APPROACHES
LOW SPEED ROADWAY

SEPTEMBER 2010

STANDARD DRAWING NO. E 610-MBAP-02

RICHARD L. VanCLEAVE REGISTERED No. 9750 STATE OF INDIANA PROFESSIONAL ENGINEER

DESIGN STANDARDS ENGINEER

/s/ Richard L. VanCleave 09/01/10
DESIGN STANDARDS ENGINEER DATE

/s/ Mark A. Miller 09/01/10
CHIEF HIGHWAY ENGINEER DATE

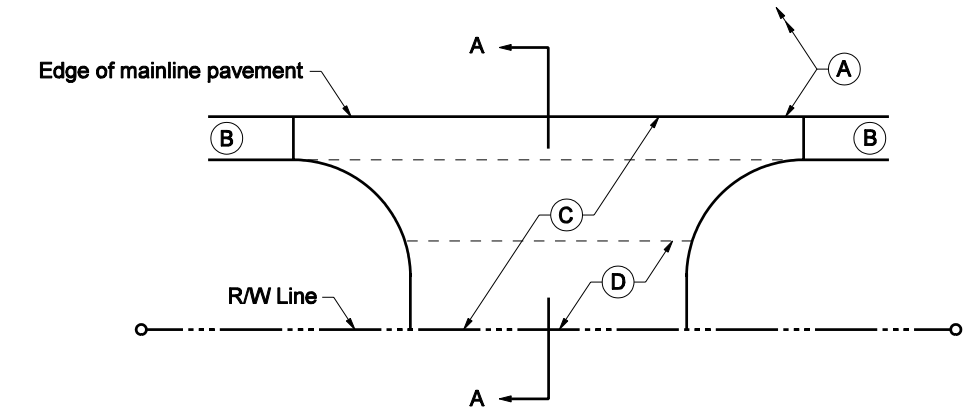

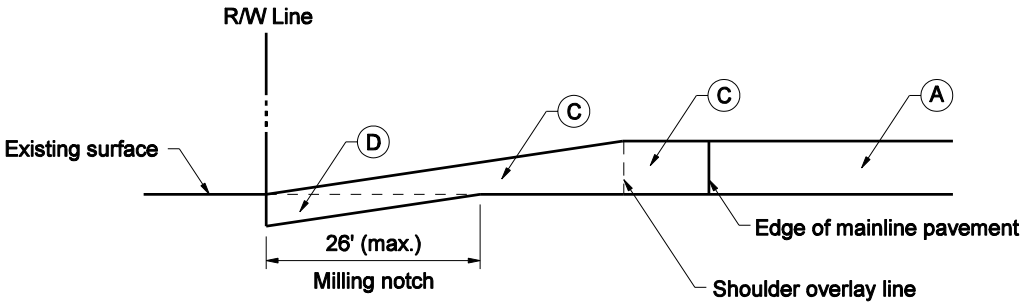

SECTION A-A

LEGEND

- (A) Typical HMA overlay, mainline
- (B) Typical HMA overlay, shoulder
- (C) HMA for approaches
- (D) Surface milling, asphalt

PUBLIC ROAD APPROACH PAVING

INDIANA DEPARTMENT OF TRANSPORTATION

PUBLIC ROAD APPROACH PAVING

MARCH 2004

STANDARD DRAWING NO. E 610-PRAP-01

RICHARD L. VanCLEAVE REGISTERED No. 9750 STATE OF INDIANA PROFESSIONAL ENGINEER

DESIGN STANDARDS ENGINEER

/s/ Richard L.VanCleave 3-01-04
DESIGN STANDARDS ENGINEER DATE

/s/ Richard K.Smutzer 3-01-04
CHIEF HIGHWAY ENGINEER DATE

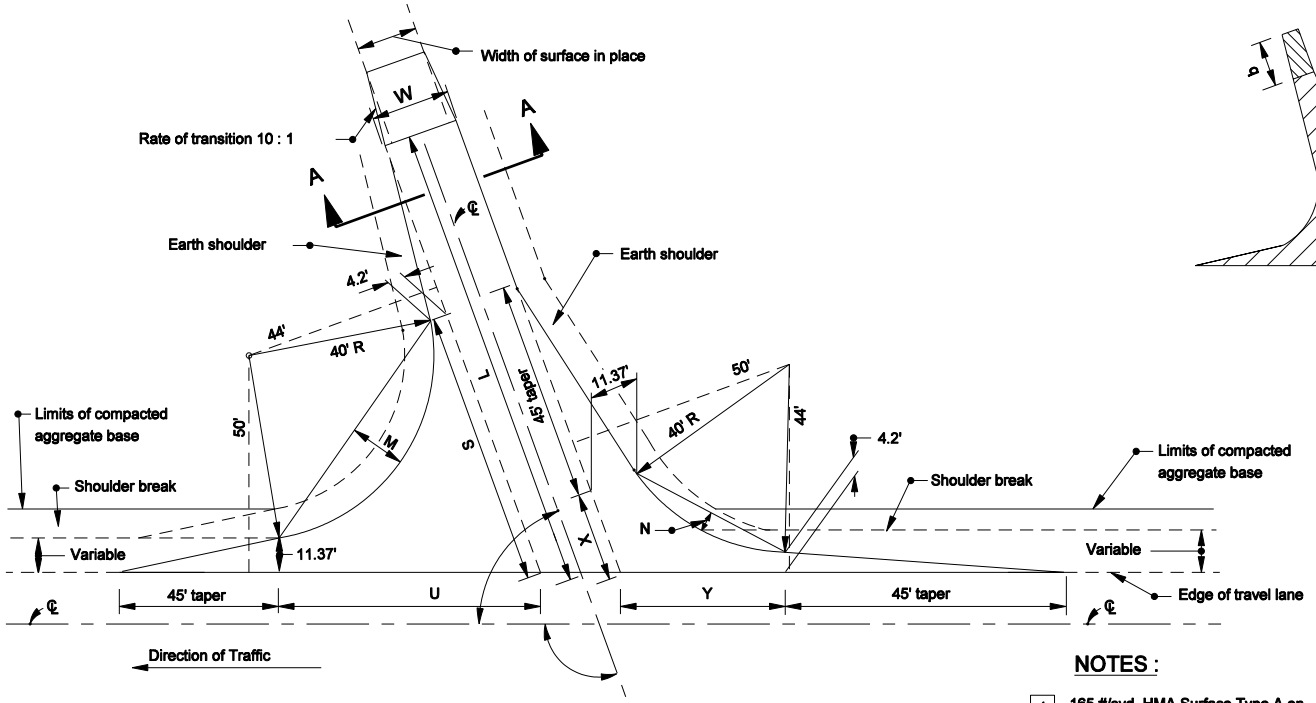

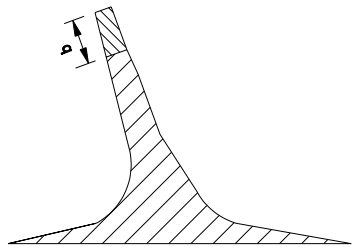

PAY LIMITS

PUBLIC ROAD APPROACH TYPE A

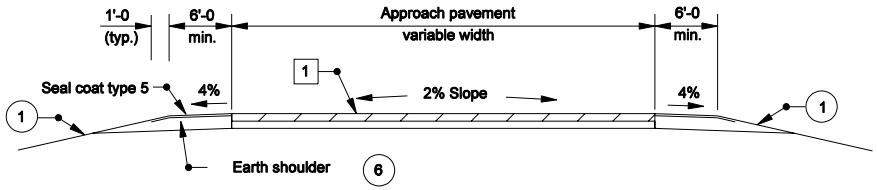

SECTION A-A MINIMUM PAVEMENT SECTION

For ADT ≤ 1000 (7)

NOTES :

1. 165 #/syd. HMA Surface Type A on 275 #/syd. HMA Intermediate Type A on 8" compacted aggregate base #53
2. See General Notes on Standard Drawing E 610-PRAP-04.
3. See Table on Standard Drawing E 610-PRAP-05 for computed values.
4. See Standard Drawing E 610 - PRAP - 07 for pay limit details.

INDIANA DEPARTMENT OF TRANSPORTATION

PUBLIC ROAD APPROACH TYPE A

MARCH 2006

STANDARD DRAWING NO. E 610-PRAP-02

RICHARD L. VanCLEAVE REGISTERED No. 9750 STATE OF INDIANA PROFESSIONAL ENGINEER

DESIGN STANDARDS ENGINEER

/s/ Richard L. VanCleave 3-01-06
DESIGN STANDARDS ENGINEER DATE

/s/ Richard K. Smutzer 3-01-06
CHIEF HIGHWAY ENGINEER DATE

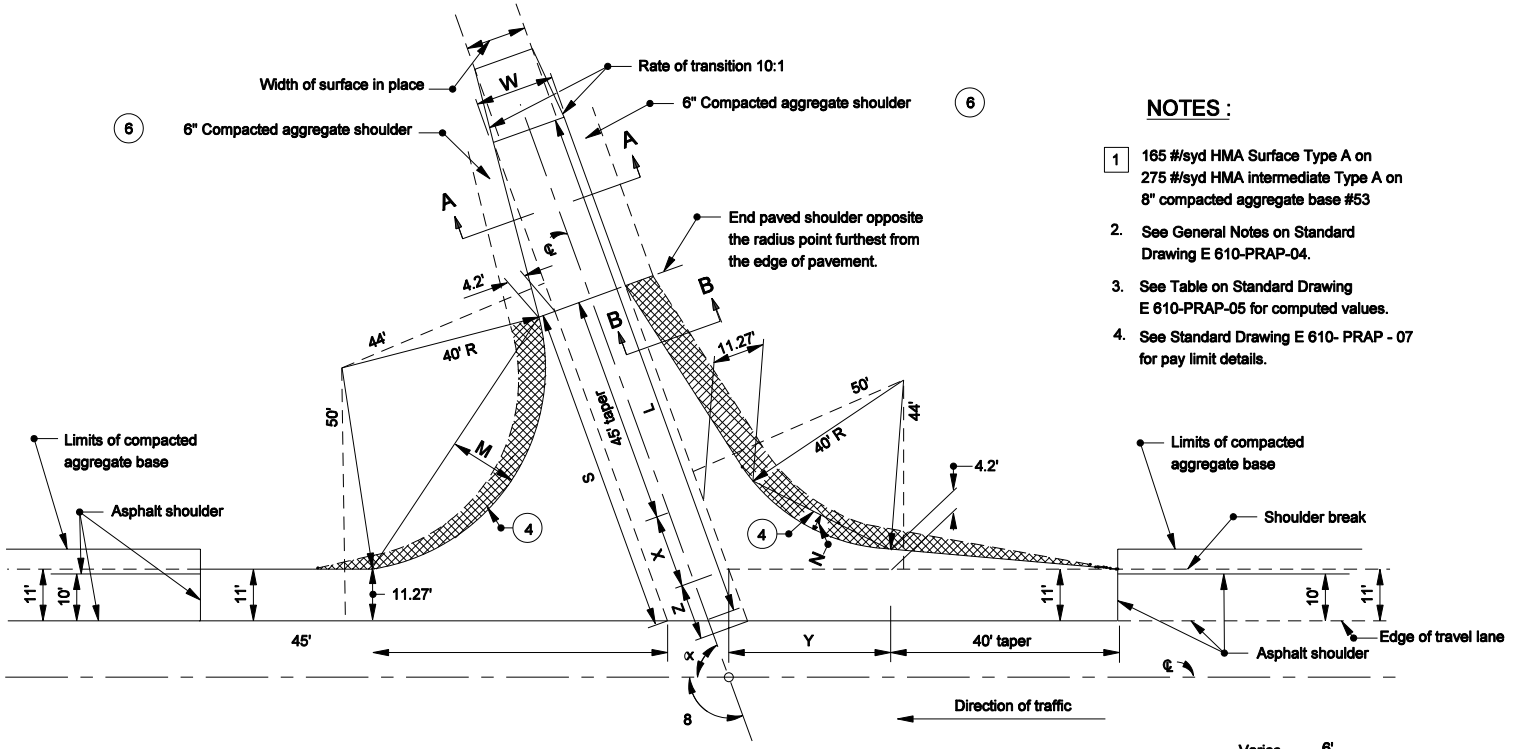

PUBLIC ROAD APPROACH TYPE "B"

NOTES :

1. 165 #/syd HMA Surface Type A on 275 #/syd HMA intermediate Type A on 8" compacted aggregate base #53
2. See General Notes on Standard Drawing E 610-PRAP-04.
3. See Table on Standard Drawing E 610-PRAP-05 for computed values.
4. See Standard Drawing E 610- PRAP - 07 for pay limit details.

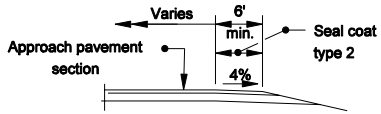

SECTION B-B

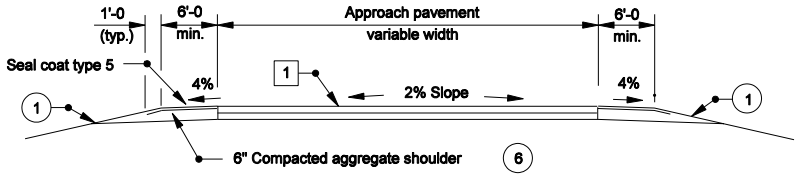

SECTION A-A MINIMUM PAVEMENT SECTION

For ADT ≤ 1000 (7)

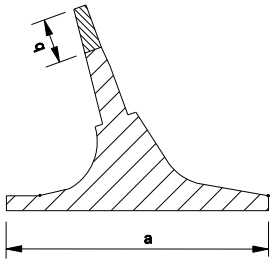

PAY LIMITS

INDIANA DEPARTMENT OF TRANSPORTATION

PUBLIC ROAD APPROACH TYPE B

MARCH 2006

STANDARD DRAWING NO. E 610-PRAP-03

RICHARD L. VanCLEAVE REGISTERED No. 9750 STATE OF INDIANA PROFESSIONAL ENGINEER

DESIGN STANDARDS ENGINEER

/s/ Richard L. VanCleave 3-01-06
DESIGN STANDARDS ENGINEER DATE

/s/ Richard K. Smutzer 3-01-06
CHIEF HIGHWAY ENGINEER DATE

GENERAL NOTES

These notes are for Standard Drawings E 610-PRAP-02, -03, and -05.

(1) Embankment slopes on either side of an approach or drive within the mainline clear zone for new construction/reconstruction projects or the obstruction free zone on 3R projects should conform to the following table:

DESIGN YEAR		High, ≥ 50 mph		Low, ≤ 45 mph
Design Year AADT		≥ 6000	< 6000	All
Multi-Lane Divided, All Functional Class.	Incoming Slope	10:1	10:1	10:1
	Outgoing Slope	4:1	4:1	4:1
Multi-Lane Undivided, All Functional Class.	Incoming Slope	10:1	6:1	6:1
	Outgoing Slope	4:1	4:1	4:1
2-Lane Arterial or collector		6:1	6:1	4:1
2-Lane Local Road		4:1	4:1	4:1

Outside the clear zone or the obstruction free zone, the embankment slopes should desirably be 4:1 but not steeper than 3:1.

2. Cross culverts under the public road approach which cannot be located outside the mainline clear zone will require appropriate end treatments.

(4) The cross hatched ⊠ shoulder area indicates the limits where the shoulder is the same as the approach pavement.

5. If the approach is to be constructed of PCCP, the details shall be as shown elsewhere in the plans for thickness, joint type, and location.

(6) Earth shoulder shall be used with the Type A public road approach. The Type B public road approach shall have 6 in. compacted aggregate and full approach pavement section shoulders as shown on the Type A approach detail.

(7) If the ADT for the public road is greater than 1000, the required pavement section shall be as shown elsewhere in the plans.

INDIANA DEPARTMENT OF TRANSPORTATION

PUBLIC ROAD APPROACH
TYPE A & B - GENERAL NOTES

SEPTEMBER 2007

STANDARD DRAWING NO. E 610-PRAP-04

RICHARD L. VanCLEAVE REGISTERED No. 9750 STATE OF INDIANA PROFESSIONAL ENGINEER

DESIGN STANDARDS ENGINEER

/s/ Richard L. VanCleave 09/04/07
DESIGN STANDARDS ENGINEER DATE

/s/ Mark A. Miller 09/04/07
CHIEF HIGHWAY ENGINEER DATE

β	U	S	M	X	Y	N	L							TOTAL APPROACH AREA A						Hatched shoulder area	C.A.B. shoulder area	β
							TYPE A			TYPE B				TYPE A			TYPE B					
							W=20	W=22	W=24	W=20	W=22	W=24	Z	W=20	W=22	W=24	W=20	W=22	W=24			
(°)	(ft)	(ft)	(ft)	(ft)	(ft)	(ft)	(ft)	(ft)	(ft)	(ft)	(ft)	(ft)	(ft)	(SYS)	(SYS)	(SYS)	(SYS)	(SYS)	(SYS)	(SYS)	(SYS)	(°)
110	55.02	65.23	11.66	18.63	33.20	3.72	108.87	109.23	109.60	108.87	109.23	109.60	11.71	531.19	556.20	501.52	645.05	670.14	695.38	112.40	52.60	110
109	53.75	64.04	11.42	19.32	33.74	3.86	107.48	107.82	108.17	107.48	107.48	108.17	11.63	524.90	549.63	574.51	639.55	664.28	689.15	112.50	51.00	109
108	52.51	62.88	11.19	20.02	34.28	4.02	106.12	106.45	106.77	106.12	106.45	106.77	11.57	518.88	543.25	567.78	634.32	658.70	683.22	112.60	49.50	108
107	51.30	61.74	10.94	20.72	34.84	4.17	104.80	105.10	105.41	104.80	105.10	105.41	11.50	513.11	537.15	561.32	629.37	653.40	677.37	112.60	48.00	107
106	50.11	60.64	10.70	21.44	35.40	4.33	103.50	103.79	104.48	103.50	103.79	104.08	11.44	507.60	531.30	555.13	624.67	648.37	672.20	112.80	46.40	106
105	48.95	59.56	10.46	22.16	35.98	4.49	102.24	102.51	102.77	102.24	102.51	102.77	11.39	502.33	525.70	549.20	620.23	643.61	667.10	112.90	45.10	105
104	47.81	58.51	10.23	22.88	36.56	4.65	101.00	101.25	101.50	101.00	102.25	101.50	11.34	497.30	520.35	543.52	616.04	639.10	662.26	112.90	43.60	104
103	46.70	57.48	9.99	23.62	37.16	4.81	99.79	100.02	100.25	99.79	100.02	100.25	11.29	492.50	515.24	538.06	612.10	634.83	657.68	113.00	42.20	103
102	45.81	56.48	9.76	24.36	37.77	4.98	98.60	98.81	99.02	98.60	98.81	99.02	11.25	487.92	510.35	532.88	608.39	630.82	653.34	113.10	40.80	102
101	44.54	55.49	9.54	25.10	38.39	5.15	97.44	97.63	97.83	97.44	97.63	97.83	11.21	483.57	505.69	527.91	604.91	627.04	649.25	113.10	39.40	101
100	43.50	54.54	9.31	25.86	39.02	5.35	96.30	96.47	96.65	96.30	96.47	96.65	11.17	479.42	501.26	523.16	601.66	623.49	645.40	113.10	37.90	100
99	42.47	53.60	9.09	26.63	39.66	5.50	95.18	95.34	95.50	95.18	95.34	95.50	11.14	475.49	497.03	518.64	598.63	620.17	641.78	113.20	36.30	99
98	41.46	52.68	8.87	27.41	40.31	5.68	94.09	94.23	94.37	94.09	94.23	94.37	11.11	471.77	493.02	514.34	595.83	617.08	638.39	113.20	34.90	98
97	40.47	51.78	8.65	28.19	40.98	5.86	93.10	93.13	93.26	93.01	93.13	93.26	11.08	468.25	489.22	510.24	593.24	614.21	635.23	113.20	33.50	97
96	39.50	50.90	8.44	28.99	41.66	6.04	91.96	92.06	92.17	91.96	92.06	92.17	11.06	464.93	485.62	506.36	590.86	611.56	632.29	113.30	32.40	96
95	38.64	50.04	8.22	29.79	42.35	6.22	90.92	91.01	91.10	90.92	91.01	91.10	11.04	461.80	482.21	502.68	588.70	609.12	629.58	113.30	31.00	95
94	37.60	49.20	8.01	30.61	43.05	6.41	89.90	89.97	90.04	89.90	89.97	90.04	11.03	458.87	479.02	499.20	586.74	606.89	627.07	113.30	29.40	94
93	36.68	48.38	7.80	31.44	43.77	6.60	88.90	88.96	89.01	88.90	88.96	89.01	11.02	456.12	476.01	495.91	584.99	604.88	624.79	113.40	28.00	93
92	35.77	47.57	7.60	32.28	44.50	6.80	87.92	87.96	87.99	87.92	87.96	87.99	11.01	453.57	473.19	492.83	583.45	603.07	622.71	113.40	26.80	92
91	34.88	46.78	7.39	33.14	45.24	6.99	86.96	86.97	86.99	88.96	88.94	88.93	11.00	451.20	470.56	489.94	586.57	606.29	626.01	113.40	27.90	91
90	34.00	46.00	7.19	34.00	46.00	7.19	86.00	86.00	86.00	90.00	90.00	90.00	11.00	449.01	468.12	487.23	589.85	609.85	629.85	113.40	29.30	90
89	33.14	45.24	6.99	34.88	46.78	7.39	85.07	85.05	85..04	91.06	91.07	91.09	11.00	447.01	465.87	484.72	593.33	613.61	633.90	113.40	30.60	89
88	32.28	44.50	6.80	35.77	47.57	7.60	84.15	84.12	84.08	92.13	92.16	92.20	11.01	445.18	463.80	482.40	597.03	617.58	638.16	113.30	32.00	88
87	31.44	43.77	6.60	36.68	48.38	7.80	83.24	83.19	83.14	93.22	93.27	93.33	11.02	443.54	461.91	480.26	600.93	621.77	642.64	113.30	33.40	87
86	30.61	43.05	6.41	37.60	49.20	8.01	83.30	83.37	83.44	94.33	94.40	94.47	11.03	444.20	462.79	481.60	605.04	626.18	647.34	113.30	34.80	86
85	29.79	42.35	6.22	38.64	50.04	8.22	84.42	84.51	84.59	95.46	95.55	95.64	11.04	447.35	466.32	485.34	609.37	630.80	652.27	113.30	36.20	85
84	28.99	41.66	6.04	39.50	50.90	8.44	85.55	85.65	85.76	96.61	96.72	96.82	11.06	450.69	469.96	489.27	613.92	635.65	657.42	113.30	37.60	84
83	28.19	40.98	5.86	40.47	51.78	8.65	86.70	86.82	86.94	97.78	97.90	98.03	11.08	454.22	473.79	493.41	618.70	640.72	662.81	113.30	39.00	83
82	27.41	40.31	5.68	41.46	52.68	8.87	87.87	88.01	88.15	98.97	99.11	99.26	11.11	457.95	477.82	497.75	623.70	646.03	668.43	113.30	40.40	82
81	26.63	39.66	5.50	42.47	53.60	9.09	89.05	89.21	89.37	100.19	100.35	100.51	11.14	461.88	482.05	502.30	628.93	651.58	674.30	113.20	41.80	81
80	25.86	39.02	5.35	43.50	54.54	9.31	90.26	90.44	90.61	101.43	101.61	101.78	11.17	466.00	486.49	507.06	634.40	657.37	680.42	113.20	43.20	80
79	25.10	38.39	5.15	44.54	55.49	9.54	91.49	91.68	91.88	102.69	102.89	103.08	11.21	470.34	491.15	512.04	640.11	663.40	686.78	113.10	44.60	79
78	24.36	37.77	4.98	45.61	56.48	9.76	92.74	92.95	93.16	103.96	104.20	104.41	11.25	474.89	496.02	517.24	646.07	669.69	693.41	113.00	46.10	78
77	23.62	37.16	4.81	46.70	57.48	9.99	94.01	94.24	94.47	105.30	105.53	105.76	11.29	479.66	501.11	522.67	652.78	676.24	700.31	113.00	47.50	77
76	22.88	36.56	4.65	47.81	58.51	10.23	95.31	95.56	95.81	106.64	106.89	107.14	11.34	484.65	506.44	528.34	658.75	683.06	707.48	113.00	49.00	76
75	22.16	35.98	4.49	48.95	59.56	10.46	96.63	96.90	97.17	108.02	108.29	108.55	11.39	489.87	511.99	534.24	665.50	690.16	714.94	112.90	50.50	75
74	21.44	35.40	4.33	50.11	60.64	10.70	97.98	98.26	98.55	109.42	109.71	110.00	11.44	495.32	517.79	540.39	672.52	697.54	722.68	112.80	52.00	74
73	20.72	34.84	4.17	51.30	61.74	10.94	99.36	99.66	99.97	110.86	111.16	111.47	11.50	501.01	523.84	546.80	679.82	705.21	730.72	112.80	53.50	73
72	20.02	34.28	4.02	52.51	62.88	11.18	100.76	101.08	101.41	112.33	112.65	112.98	11.57	506.96	530.14	553.47	687.42	713.18	739.08	112.70	55.00	72
71	19.32	33.74	3.86	53.75	64.04	11.42	102.20	102.54	102.88	113.83	114.17	114.52	11.63	513.16	536.71	560.42	695.32	721.46	747.75	112.60	56.60	71
70	18.63	33.20	3.72	55.02	65.23	11.66	103.66	104.03	104.39	115.37	115.73	116.10	11.71	519.62	543.55	567.64	703.54	730.07	756.76	112.50	58.10	70

LEGEND

α = ANGLE OF TURN

The angle through which a vehicle travels on the public road approach toward making a right hand turn. It is measured from the extension of the tangent on which a vehicle approaches the intersecting road to the corresponding tangent on the intersecting road to which the vehicle turns.

β = INTERSECTION CONTROL ANGLE

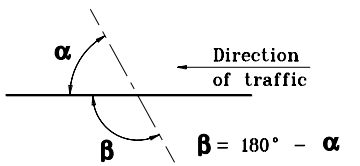

NOTES :

1. See Standard Drawing E 610–PRAP–02 for public road approach type A.
2. See Standard Drawing E 610–PRAP–03 for public road approach type B.
3. See Standard Drawing E 610–PRAP–04 for General Notes.

INDIANA DEPARTMENT OF TRANSPORTATION

PUBLIC ROAD APPROACH TYPE A & TYPE B – TABLE OF VALUE

SEPTEMBER 2001

STANDARD DRAWING NO. **E 610–PRAP–05**

ANTHONY L. UREMOVICH REGISTERED No. 18095 STATE OF INDIANA PROFESSIONAL ENGINEER

DESIGN STANDARDS ENGINEER

/s/ Anthony L. Uremovich 9-04-01
DESIGN STANDARDS ENGINEER — DATE

/s/ Firooz Zandi 9-04-01
CHIEF HIGHWAY ENGINEER — DATE

EXAMPLE FOR TYPE C, W = 24 ft

Intersection control angle 8 = 100°

L = 86.50'
S = 44.38'
U = 51.73'
X = 25.86'
Y = 39.02'

Total area = 421.03 sys

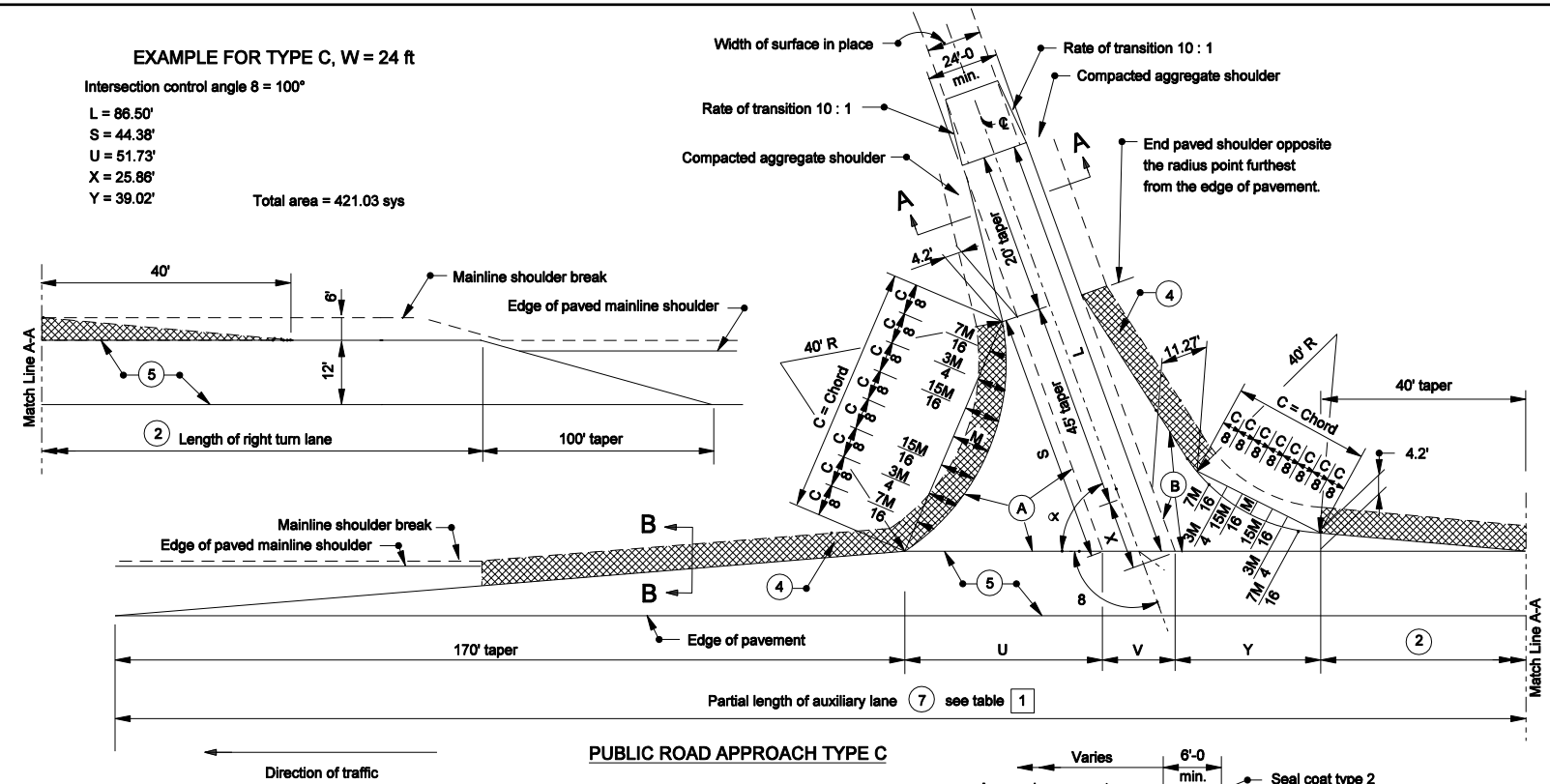

PUBLIC ROAD APPROACH TYPE C

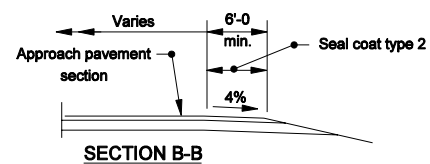

SECTION B-B

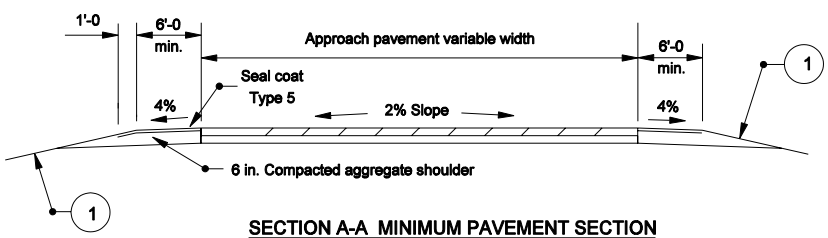

SECTION A-A MINIMUM PAVEMENT SECTION

For ADT ≤ 1000

165#/syd HMA Surface Type A on
275#/syd HMA Intermediate Type A on
8" compacted aggregate base #53

NOTES :

1. See Standard Drawing E 610-PRAP-09 for table with computed values.
2. See Standard Drawing E 610-PRAP-11 for Table A.
3. See Standard Drawing E-610-PRAP-08 for General Notes and pay limits.

INDIANA DEPARTMENT OF TRANSPORTATION

PUBLIC ROAD APPROACH TYPE C

MARCH 2006

STANDARD DRAWING NO. E 610-PRAP-06

RICHARD L. VanCLEAVE REGISTERED No. 9750 STATE OF INDIANA PROFESSIONAL ENGINEER

DESIGN STANDARDS ENGINEER

/s/ Richard L. VanCleave 3-01-06
DESIGN STANDARDS ENGINEER DATE

/s/ Richard K. Smutzer 3-01-06
CHIEF HIGHWAY ENGINEER DATE

a < 100', HMA or PCCP for Approaches

a ≥ 100', 401 or 402 HMA or 501 or 502 PCCP

HMA or PCCP for Approaches

b < 100', HMA or PCCP for Approaches

b ≥ 100', 401 or 402 HMA or 501 or 502 PCCP

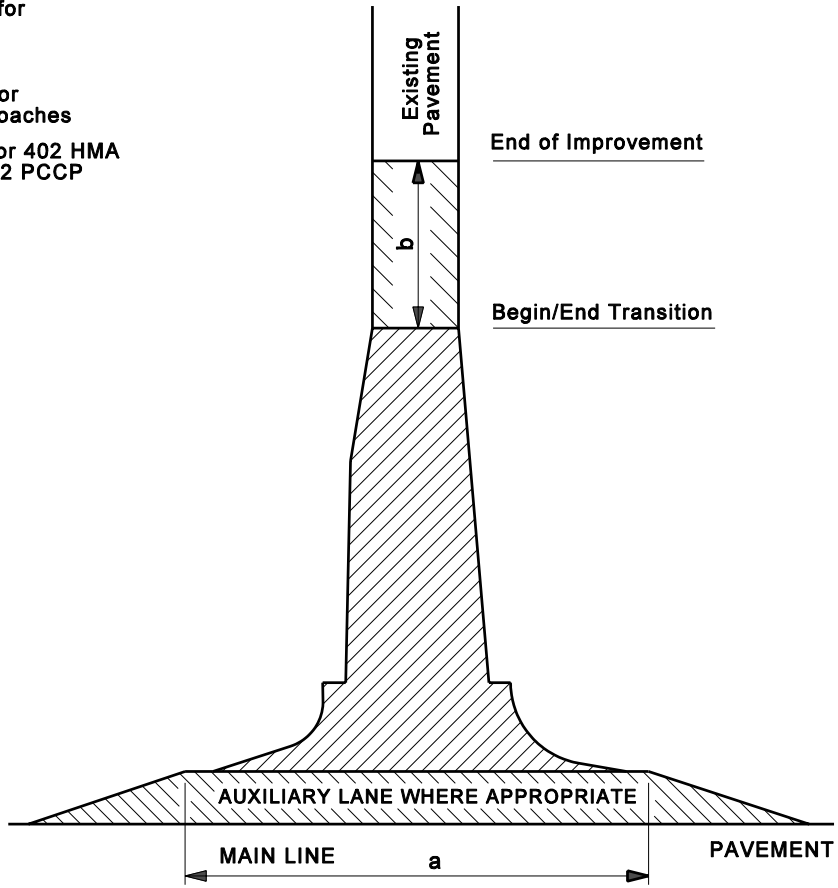

NOTES:

1. The pay limits shown hereon generally apply to Types A, B, C, and D Public Road Approaches as shown on Standard Drawings E 610-PRAP-02, -03, -06, and -10 respectively.

INDIANA DEPARTMENT OF TRANSPORTATION

PUBLIC ROAD APPROACH PAY LIMITS

MARCH 2006

STANDARD DRAWING NO. E 610-PRAP-07

RICHARD L. VanCLEAVE REGISTERED No. 9750 STATE OF INDIANA PROFESSIONAL ENGINEER

DESIGN STANDARDS ENGINEER

/s/ Richard L. VanCleave 3-01-06
DESIGN STANDARDS ENGINEER DATE

/s/ Richard K. Smutzer 3-01-06
CHIEF HIGHWAY ENGINEER DATE

GENERAL NOTES

These notes are for Standard Drawings
E 610-PRAP-06 and E 610-PRAP-09.

(1) See table on Standard Drawing E 610-PRAP-04 for embankment slopes to be built on either side of the approach.

2. Cross culverts under the public road approach which cannot be located outside the mainline clear zone will require appropriate end treatments at each end as shown on the plans.

3. If the approach is to be constructed of concrete, the details shall be as shown elsewhere in the plans for pavement thickness, joint type, and location.

(4) The cross hatched ▨ shoulder area indicates the limits where the shoulder is the same section as the approach pavement.

(5) The pavement section for the auxiliary lane shall be as detailed elsewhere in the plans.

(6) If the ADT for the public road is greater than 1000, the required pavement section shall be as shown elswhere in the plans.

7. See Standard Drawing E 610 - PRAP - 07 for pay limit details.

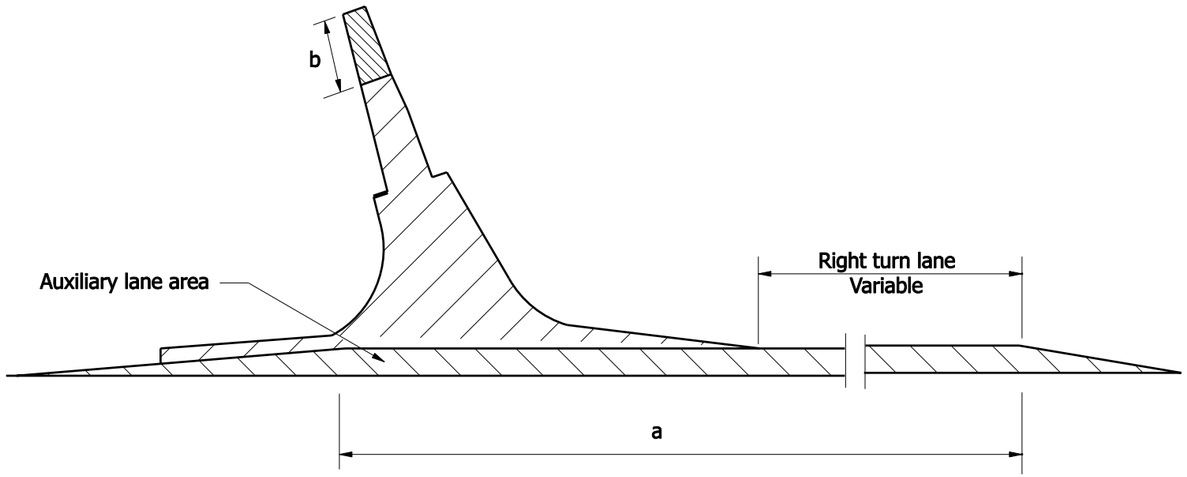

PAY LIMITS

INDIANA DEPARTMENT OF TRANSPORTATION

PUBLIC ROAD APPROACH
TYPE C - GENERAL NOTES

SEPTEMBER 2007

STANDARD DRAWING NO. E 610-PRAP-08

RICHARD L. VanCLEAVE
REGISTERED
No. 9750
STATE OF INDIANA
PROFESSIONAL ENGINEER

DESIGN STANDARDS ENGINEER

/s/ Richard L. VanCleave 09/04/07
DESIGN STANDARDS ENGINEER — DATE

/s/ Mark A. Miller 09/04/07
CHIEF HIGHWAY ENGINEER — DATE

β degree	L ft.	S ft.	U ft.	X ft.	Y ft.	V ft.	Shoulder gap ft.	Chord Lt. ft.	Chord Rt. ft.	M Lt. ft.	M Rt. ft.	Approach Areas (A) sys.	Approach Areas (B) sys.	Approach Areas Total sys.	Auxiliary lane part.area (7) sys.	β degree
110	98.95	54.59	61.38	18.63	33.20	25.54	330.12	63.16	33.68	15.45	3.72	116.48	85.95	466.32	326.83	110
109	97.59	53.46	60.31	19.32	33.74	25.38	329.43	62.72	34.31	15.17	3.86	112.89	87.65	460.78	325.90	109
108	96.26	52.36	59.26	20.02	34.28	25.24	328.78	62.29	34.94	14.90	4.02	109.42	89.37	455.49	325.04	108
107	94.95	51.28	58.24	20.72	34.84	25.10	328.18	61.85	35.56	14.63	4.17	106.08	91.14	450.43	324.23	107
106	93.68	50.23	57.24	21.44	35.40	24.97	327.61	61.40	36.19	14.36	4.33	102.85	92.95	445.59	323.48	106
105	92.42	49.21	56.27	22.16	35.98	24.85	327.10	60.95	36.81	14.09	4.49	99.72	94.80	440.98	322.79	105
104	91.19	48.20	55.32	22.88	36.56	24.74	326.62	60.50	37.43	13.83	4.65	96.70	96.70	436.58	322.16	104
103	89.99	47.22	54.39	23.62	37.16	24.63	328.18	60.04	38.04	13.56	4.81	93.79	98.65	432.39	321.58	103
102	88.60	46.25	53.48	24.36	37.77	24.54	325.79	60.58	38.66	13.30	4.98	90.96	100.64	428.41	321.05	102
101	87.64	45.31	52.60	25.10	38.39	24.45	325.44	59.11	39.27	13.04	5.15	88.24	102.68	424.62	320.58	101
100	86.50	44.38	51.73	25.86	39.02	24.37	325.12	58.64	39.87	12.79	5.32	85.60	104.77	421.03	320.16	100
99	85.37	43.47	50.88	26.63	39.66	24.30	324.84	58.16	40.48	12.53	5.50	83.05	108.92	417.63	319.79	99
98	84.27	42.58	50.05	27.41	40.31	24.24	324.60	57.68	41.08	12.28	5.68	80.58	109.12	414.41	319.47	98
97	83.18	41.71	49.24	28.19	40.98	24.18	324.40	57.19	41.68	12.03	5.86	78.19	111.38	411.38	319.20	97
96	82.11	40.85	48.45	28.99	41.66	24.13	324.24	56.70	42.27	11.78	6.04	76.87	113.70	408.53	318.98	96
95	81.06	40.01	47.67	29.79	42.35	24.09	324.11	56.21	42.86	11.54	6.22	73.63	116.07	405.86	318.81	95
94	80.02	39.16	46.90	30.61	43.05	24.06	324.01	56.71	43.45	11.29	6.41	71.47	118.51	403.36	318.68	94
93	79.00	38.37	46.16	31.44	43.77	24.03	323.96	55.20	44.03	11.05	6.60	69.37	121.02	401.04	318.61	93
92	77.98	37.57	45.42	32.28	44.50	24.02	323.94	54.70	44.62	10.81	6.80	67.33	123.59	398.88	318.58	92
91	77.92	36.79	44.70	33.14	45.24	24.00	323.94	54.18	45.19	10.57	6.99	65.36	126.23	399.40	318.60	91
90	79.00	36.00	44.00	34.00	46.00	24.00	324.00	53.67	48.77	10.34	7.19	63.48	128.84	403.07	318.67	90
89	80.09	35.24	43.31	34.88	46.78	24.00	324.09	53.15	46.34	10.10	7.39	61.61	131.73	406.91	318.79	89
88	81.19	34.49	42.63	35.77	47.57	24.02	324.22	52.63	46.90	9.87	7.60	59.82	134.60	410.93	318.96	88
87	82.31	33.75	41.96	36.68	48.38	24.03	324.37	52.10	47.47	9.64	7.80	58.08	137.54	415.12	319.17	87
86	83.44	33.03	41.31	37.60	49.20	24.06	324.57	51.57	48.03	9.42	8.01	58.40	140.57	419.49	319.43	86
85	84.59	32.31	40.67	38.54	50.04	24.09	324.80	51.03	48.58	9.20	8.22	54.77	143.68	424.04	319.74	85
84	85.76	31.60	40.04	39.50	50.09	24.13	325.07	50.49	49.14	8.97	8.44	53.20	146.88	428.77	320.10	84
83	86.94	30.94	39.42	40.47	51.78	24.18	325.38	49.95	49.69	8.75	8.65	51.67	150.18	433.69	320.51	83
82	88.15	30.21	38.81	41.46	52.68	24.24	325.73	49.40	50.23	8.54	8.87	50.18	153.57	438.81	320.97	82
81	89.37	29.54	38.21	42.47	53.60	24.30	326.11	48.85	50.77	8.32	9.09	48.74	157.06	444.12	321.48	81
80	90.61	28.86	37.63	43.50	54.54	24.37	326.54	48.30	51.31	8.11	9.31	47.35	160.66	449.04	322.04	80
79	91.88	28.20	37.05	44.54	55.49	24.45	326.99	47.74	51.84	7.90	9.54	46.00	164.36	455.36	322.65	79
78	93.16	27.55	36.48	45.61	58.48	24.54	327.50	47.17	52.38	7.69	9.76	44.69	168.17	461.29	323.32	78
77	94.47	26.90	35.92	46.70	57.48	24.63	328.30	46.61	52.90	7.49	9.99	43.42	172.10	467.44	324.04	77
76	95.81	26.26	35.37	47.81	58.51	24.74	328.82	46.04	53.42	7.29	10.23	42.18	176.15	473.82	324.82	76
75	97.17	25.63	35.83	48.95	59.56	24.85	328.24	45.47	53.94	7.09	10.46	40.99	180.33	480.43	325.65	75
74	98.55	25.00	34.30	50.11	60.64	24.97	329.91	44.89	54.45	6.89	10.70	39.83	184.64	487.28	326.54	74
73	99.97	24.38	33.78	51.30	61.74	25.10	330.62	44.31	54.96	6.70	10.94	38.71	189.08	494.37	327.49	73
72	101.41	23.77	33.27	52.51	62.88	25.24	331.39	43.73	55.47	6.50	11.18	37.62	193.67	501.72	328.50	72
71	102.88	23.16	32.76	53.75	64.04	25.38	332.18	43.14	55.97	6.32	11.42	36.56	198.41	509.33	329.58	71
70	104.39	22.56	32.26	55.06	65.23	25.54	333.03	42.55	56.47	6.13	11.66	35.54	203.30	517.21	330.71	70

LEGEND

α = ANGLE OF TURN

It is the angle which a vehicle travels on the public road approach toward making a right hand turn. It is measured from the extension of the tangent on which a vehicle approaches the intersecting road to the corresponding tangent on the intersecting road to which the vehicle turns.

β = INTERSECTION CONTROL ANGLE

$\beta = 180° - \alpha$

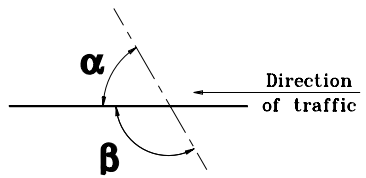

NOTES :

1. See Standard Drawing E 610-PRAP-06 for public road approach type C.
2. See Standard Drawing E 610-PRAP-08 for General Notes.

INDIANA DEPARTMENT OF TRANSPORTATION

PUBLIC ROAD APPROACH TYPE C – TABLE OF VALUES

SEPTEMBER 2001

STANDARD DRAWING NO. **E 610-PRAP-09**

ANTHONY L. UREMOVICH REGISTERED No. 18095 STATE OF INDIANA PROFESSIONAL ENGINEER

DESIGN STANDARDS ENGINEER

/s/ Anthony L. Uremovich — DESIGN STANDARDS ENGINEER — 9-04-01 DATE

/s/ Firooz Zandi — CHIEF HIGHWAY ENGINEER — 9-04-01 DATE

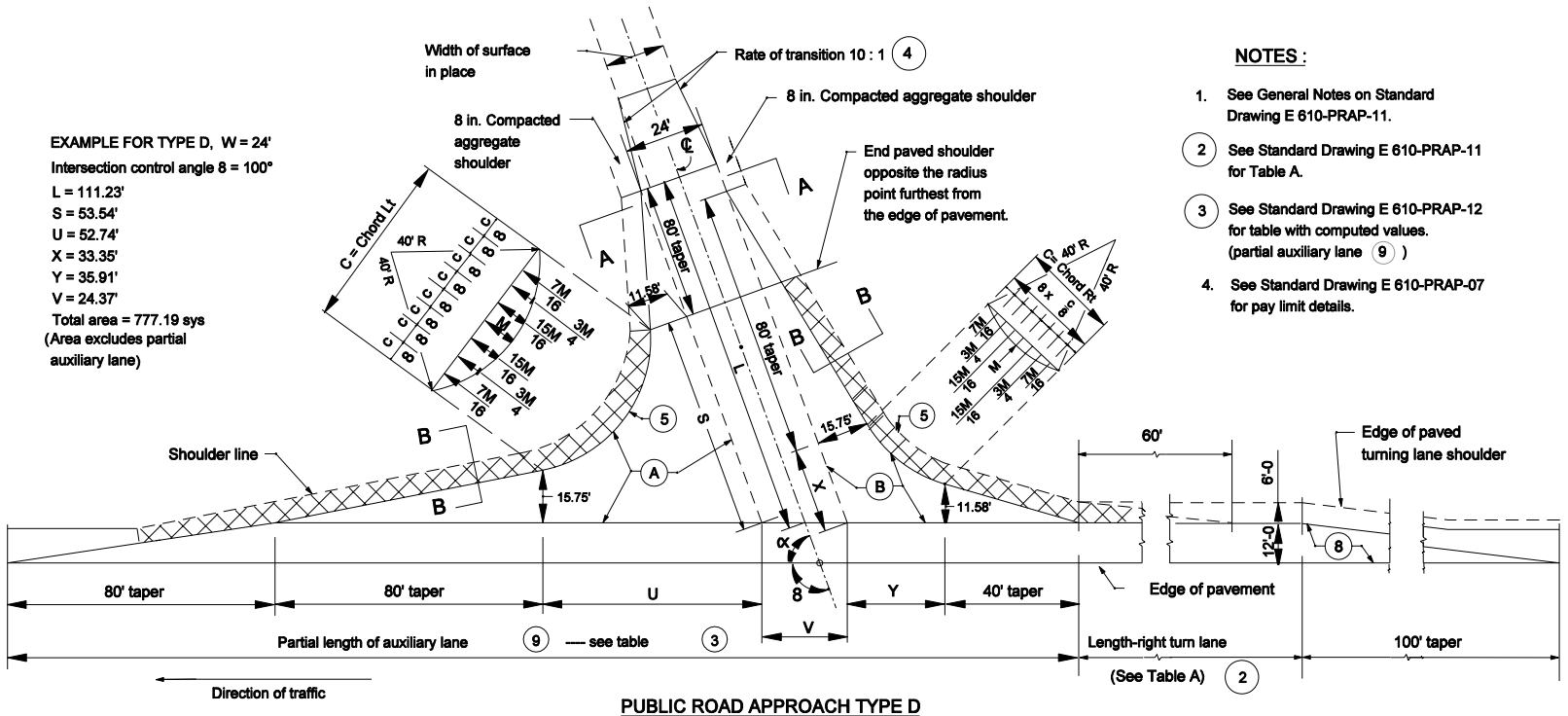

PUBLIC ROAD APPROACH TYPE D

NOTES :

1. See General Notes on Standard Drawing E 610-PRAP-11.
2. See Standard Drawing E 610-PRAP-11 for Table A.
3. See Standard Drawing E 610-PRAP-12 for table with computed values. (partial auxiliary lane 9)
4. See Standard Drawing E 610-PRAP-07 for pay limit details.

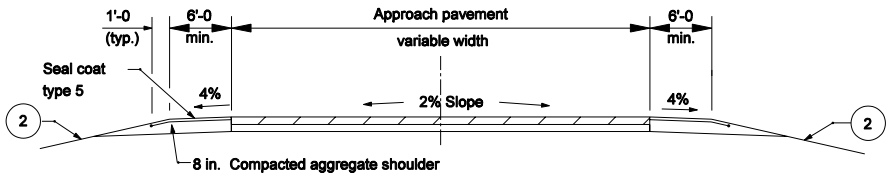

SECTION A-A MINIMUM PAVEMENT SECTION

FOR ≤ 50: TRUCKS, CLASS V OR ABOVE PER DAY

165#/syd HMA Surface 9.5mm Type A on
495 #/syd HMA Intermediate 19.0 mm Type A on
8" compacted aggregate base #53

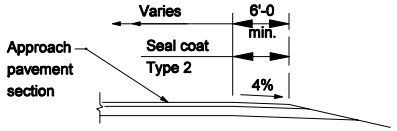

SECTION B-B

INDIANA DEPARTMENT OF TRANSPORTATION

PUBLIC ROAD APPROACH TYPE D

MARCH 2006

STANDARD DRAWING NO. E 610-PRAP-10

RICHARD L. VanCLEAVE REGISTERED No. 9750 STATE OF INDIANA PROFESSIONAL ENGINEER

DESIGN STANDARDS ENGINEER

/s/ Richard L. VanCleave 3-01-06
DESIGN STANDARDS ENGINEER DATE

/s/ Richard K. Smutzer 3-01-06
CHIEF HIGHWAY ENGINEER DATE

GENERAL NOTES

These notes are for Standard Drawings E 610-PRAP-10 and E 610-PRAP-12.

1. Standard Drawings E 610-PRAP-10 and -12 are for intersection control angle 70° to 110° .
   If intersection control angle is less than 70° or greater than 110° a special design will be required.

(2) See table on Standard Drawing E 610-PRAP-04 for embankment slopes to be built on either side of the approach

3. Cross culverts under the public road approach which cannot be located outside the mainline clear zone will require an appropriate end section at each end.

(4) If the existing pavement is asphalt the transition area shall be the same section as the approach and will be included in the pay limits for HMA for Approaches.

(5) The cross hatched ⊠ shoulder area indicates the limits where the shoulder is the same as the approach pavement.

6. If the approach is to be constructed of PCCP, the details shall be as shown elsewhere in the plans for pavement thickness, joint type, and location.

7. If the Class V or above truck count for the public road approach is greater than 50 per day, the required pavement section shall be as provided elsewhere in the plans

(8) The pavement section for the turn lane shall be as shown elsewhere in the plans.

Design speed (m.p.h.)	TABLE A: MINIMUM LENGTH OF TURNING LANES (excluding taper) , ft.									
	Downgrade slope in %					Upgrade slope in %				
	6 to 5	4.99 to 4	3.99 to 3	2.99 to 2.01	2 to 0	0 to 2	2.01 to 2.99	3 to 3.99	4 to 4.99	5 to 6
40	400	380	355	325	295	295	280	265	250	235
50	550	520	485	445	405	405	385	365	345	325
60	675	640	600	555	500	500	475	450	425	400
65	730	690	650	595	540	540	515	485	460	435
70	800	755	710	650	590	590	560	530	505	475

INDIANA DEPARTMENT OF TRANSPORTATION

PUBLIC ROAD APPROACH TYPE D GENERAL NOTES AND TABLE A

SEPTEMBER 2007

STANDARD DRAWING NO. E 610-PRAP-11

RICHARD L. VanCLEAVE REGISTERED No. 9750 STATE OF INDIANA PROFESSIONAL ENGINEER

DESIGN STANDARDS ENGINEER

/s/ Richard L. VanCleave 09/04/07
DESIGN STANDARDS ENGINEER DATE

/s/ Mark A. Miller 09/04/07
CHIEF HIGHWAY ENGINEER DATE

β degree	L ft	S ft	U ft	X ft	Y ft	V ft	Shoulder gap ft	Chord Lt. ft	Chord Rt. ft	M Lt. ft	M Rt. ft	Approach Areas (A) sys	Approach Areas (B) sys	Approach Areas Total sys	Auxiliary lane part.area (9) sys	β degree
110	109.97	65.61	65.50	25.46	29.21	25.54	320.25	52.66	29.14	9.98	2.75	335.88	174.50	803.64	373.67	110
109	108.40	64.26	64.09	26.22	29.83	25.38	319.31	52.34	29.79	9.75	2.88	329.40	176.97	795.42	372.41	109
108	106.85	62.98	62.72	26.97	30.46	25.24	318.41	51.81	30.43	9.52	3.01	323.11	179.49	787.55	371.22	108
107	105.35	61.68	61.37	27.74	31.11	25.10	317.57	51.27	31.08	9.30	3.14	317.01	182.07	780.00	370.10	107
106	105.08	60.43	60.06	28.52	31.76	24.97	316.78	50.73	31.72	9.07	3.28	311.08	184.70	775.99	369.04	106
105	106.08	59.22	58.77	29.30	32.42	24.85	316.04	50.19	32.36	8.85	3.42	305.33	187.38	775.60	368.06	105
104	107.10	58.03	57.52	30.09	33.10	24.73	315.35	49.65	33.00	8.63	3.56	299.74	190.12	775.45	367.13	104
103	108.12	56.87	56.28	30.89	33.78	24.63	314.70	49.10	3.63	8.42	3.71	294.31	192..92	775.54	366.26	103
102	109.15	55.74	55.08	31.70	34.48	24.54	314.10	48.54	34.26	8.21	3.85	289.03	195.78	775.87	365.46	102
101	110.18	54.63	53.90	32.52	35.19	24.45	313.54	47.99	34.89	8.00	4.01	283.89	198.70	776.42	364.72	101
100	111.23	53.54	52.74	33.35	35.91	24.37	313.02	47.43	35.52	7.79	4.16	278.90	201.68	777.19	364.03	100
99	112.28	52.48	51.61	34.18	36.65	24.30	312.55	46.86	36.14	7.58	4.32	274.04	204.73	778.19	363.40	99
98	113.35	51.45	50.49	35.03	37.39	24.24	312.12	46.30	36.77	7.38	4.47	269.31	207.85	779.42	362.83	98
97	114.42	50.43	49.40	35.89	38.15	24.18	311.73	45.72	37.38	7.18	4.64	264.70	211.04	780.86	362.31	97
96	115.51	49.44	48.33	36.77	38.93	24.13	311.39	45.15	38.00	6.98	4.80	260.21	214.31	782.53	361.85	96
95	116.60	48.46	47.27	37.65	39.71	24.09	311.08	44.57	38.61	6.78	4.97	255.84	217.65	784.42	361.44	95
94	117.71	47.51	46.24	38.55	40.52	24.06	310.82	43.99	39.22	6.59	5.14	251.58	221.01	786.54	361.09	94
93	118.83	46.57	45.22	39.46	41.33	24.03	310.59	43.41	39.83	6.40	5.31	247.43	224.56	788.87	360.79	93
92	119.96	45.66	44.22	40.38	42.17	24.01	310.40	42.82	40.43	6.21	5.48	243.38	228.15	791.43	360.54	92
91	121.11	44.76	43.24	41.32	43.01	24.00	310.26	42.23	41.03	6.03	5.66	239.43	231.82	794.21	360.34	91
90	122.27	43.88	42.27	42.27	43.88	24.00	310.15	41.63	41.63	5.84	5.84	235.58	235.58	797.21	360.20	90
89	123.45	43.01	41.32	43.24	44.76	24.00	310.08	41.03	42.23	5.66	6.03	231.82	239.43	800.44	360.11	89
88	124.64	42.17	40.38	44.22	45.66	24.01	310.06	40.43	42.82	5.48	6.21	228.15	243.38	803.90	360.07	88
87	125.85	41.33	39.46	45.22	46.57	24.03	310.07	39.83	43.41	5.31	6.40	224.56	247..38	807.60	360.09	87
86	127.08	40.52	38.55	46.24	47.51	24.06	310.12	39.22	43.99	5.14	6.59	221.06	251.56	811.52	360.16	86
85	128.32	39.71	37.65	47.27	48.46	24.09	310.21	38.61	44.57	4.97	6.78	217.65	255.84	815.69	360.28	85
84	129.59	38.93	36.77	48.33	49.44	24.13	310.34	38.00	45.15	4.80	6.98	214.31	260.21	820.09	360.45	84
83	130.87	38.15	35.89	49.40	50.43	24.18	310.51	37.38	45.72	4.64	7.18	211.04	264.70	824.74	360.67	83
82	132.18	37.39	35.03	50.49	51.45	24.24	310.72	36.77	46.30	4.47	7.38	207.85	269.31	829.64	360.95	82
81	133.51	36.65	34.18	51.61	52.48	24.30	310.97	36.14	46.86	4.32	7.58	204.73	274.04	834.79	361.29	81
80	134.86	35.91	33.35	52.74	53.54	24.37	311.26	35.52	47.43	4.16	7.79	201.68	278.90	840.20	361.68	80
79	136.23	35.19	32.52	53.90	54.63	24.45	311.59	34.89	47.99	4.01	8.00	198.70	283.89	845.87	362.12	79
78	137.63	34.48	31.70	55.08	55.74	24.54	311.97	34.26	48.54	3.85	8.21	195.78	289.03	851.82	362.63	78
77	139.06	33.78	30.89	56.28	56.87	24.63	312.39	33.63	49.10	3.71	8.42	192.92	294.31	858.04	363.19	77
76	140.51	33.10	30.09	57.52	58.03	24.73	312.85	33.00	49.65	3.56	8.63	190.12	299.74	864.55	363.80	76
75	141.99	32.42	29.30	58.77	59.22	24.85	313.36	32.36	50.19	3.42	8.85	187.38	305.33	871.35	364.48	75
74	143.50	31.76	28.52	60.06	60.43	24.97	313.92	31.72	50.73	3.28	9.07	184.70	311.08	878.44	365.22	74
73	145.04	31.11	27.74	61.37	61.68	25.10	313.92	31.08	51.27	3.14	9.30	182.07	317.01	885.85	366.02	73
72	146.61	30.46	26.97	62.72	62.96	25.24	315.17	30.43	51.81	3.01	9.52	179.49	323.11	893.57	366.89	72
71	148.22	29.83	26.22	64.09	64.26	25.38	315.86	29.79	52.34	2.88	9.75	176.97	329.40	901.63	367.82	71
70	149.87	29.21	25.46	65.50	65.61	25.54	316.61	29.14	52.86	2.75	9.99	174.50	335.88	910.02	368.81	70

LEGEND

α = ANGLE OF TURN

The angle which a vehicle travels on the public road approach toward making a right hand turn. It is measured from the extention of the tangent on which a vehicle approaches the intersecting road to the corresponding tangent on the intersecting road to which the vehicle turns.

β = INTERSECTION CONTROL ANGLE

β = 180°- α

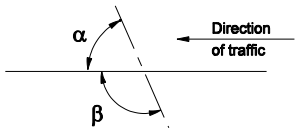

NOTES:

1. See Standard Drawing E 610-PRAP-10 for public road approach type D.
2. See Standard Drawing E 610-PRAP-11 for General Notes.

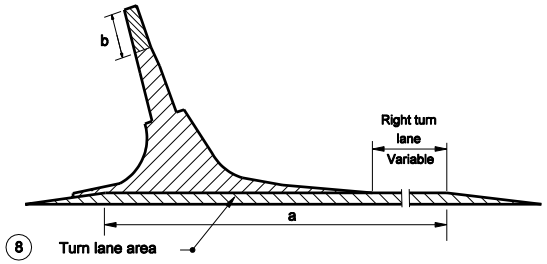

PAY LIMITS

INDIANA DEPARTMENT OF TRANSPORTATION

PUBLIC ROAD APPROACH TYPE D - TABLE OF VALUES

MARCH 2006

STANDARD DRAWING NO. E 610-PRAP-12

RICHARD L. VanCLEAVE REGISTERED No. 9750 STATE OF INDIANA PROFESSIONAL ENGINEER

DESIGN STANDARDS ENGINEER

/s/ Richard L. VanCleave 3-01-06
DESIGN STANDARDS ENGINEER DATE

/s/ Richard K. Smutzer 3-01-06
CHIEF HIGHWAY ENGINEER DATE

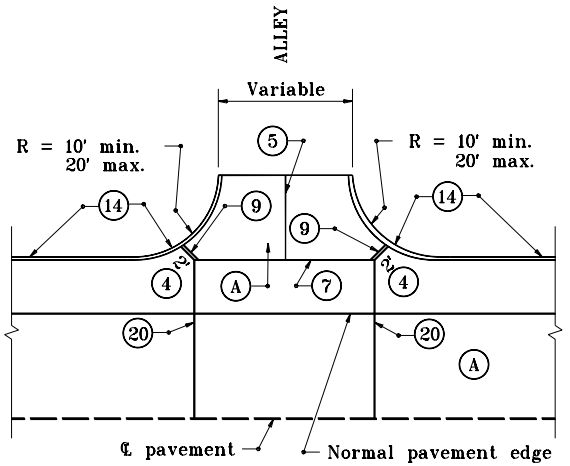

ALLEY APPROACH
WITH PCCP MAINLINE PAVEMENT

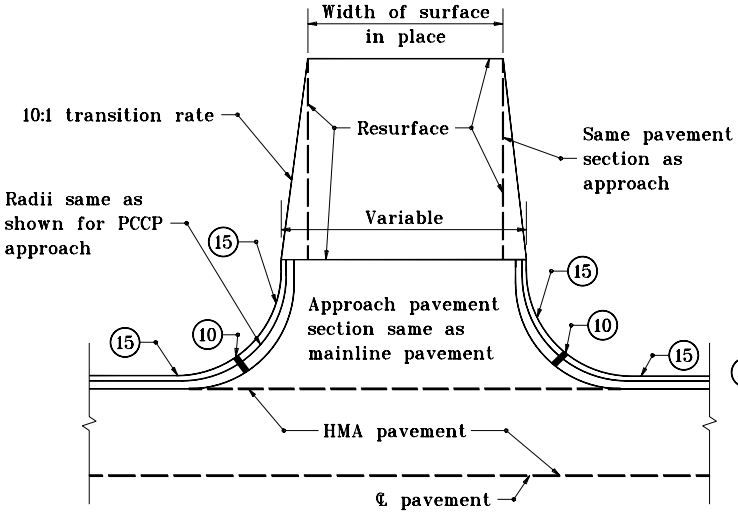

STREET OR ALLEY APPROACH
WITH HMA MAINLINE PAVEMENT

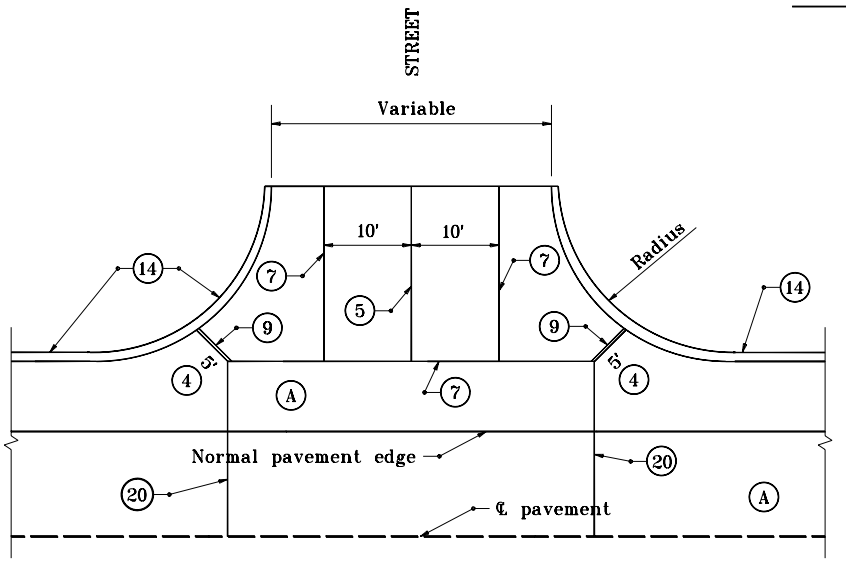

STREET APPROACH
WITH PCCP MAINLINE PAVEMENT

GENERAL NOTES

1. Radii of 25' at minor cross streets shall be provided on new construction and on reconstruction where space permits.
2. Radii of 30' or more at major cross streets shall be provided where feasible so that a truck may turn without encroachment.
3. Radii of 40' or more at major cross streets shall be provided where trucks and buses repeatedly turn.

(4) Ear construction type B permitted as shown on Standard Drawing E 605-ERCN-02.

LEGEND

- (A) PCCP
- (5) Longitudinal joint
- (7) Keyway joint
- (9) 1" preformed joint filler
- (10) ½" preformed joint filler
- (14) Integral concrete curb
- (15) Combined curb and gutter
- (20) Contraction joint

INDIANA DEPARTMENT OF TRANSPORTATION

STREET or ALLEY APPROACH
HMA MAINLINE PAVEMENT

JANUARY 2000

STANDARD DRAWING NO. **E 610-PRAP-13**

ANTHONY L. UREMOVICH REGISTERED No. 18095 STATE OF INDIANA PROFESSIONAL ENGINEER

DESIGN STANDARDS ENGINEER

/s/ Anthony L. Uremovich — DESIGN STANDARDS ENGINEER — 1-03-00 DATE

/s/ Firooz Zandi — CHIEF HIGHWAY ENGINEER — 1-03-00 DATE

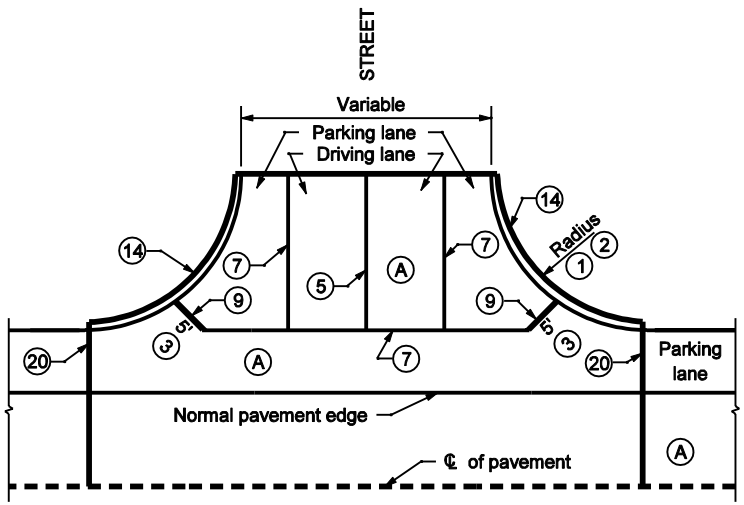

STREET APPROACH
WITH PCCP MAINLINE APPROACH

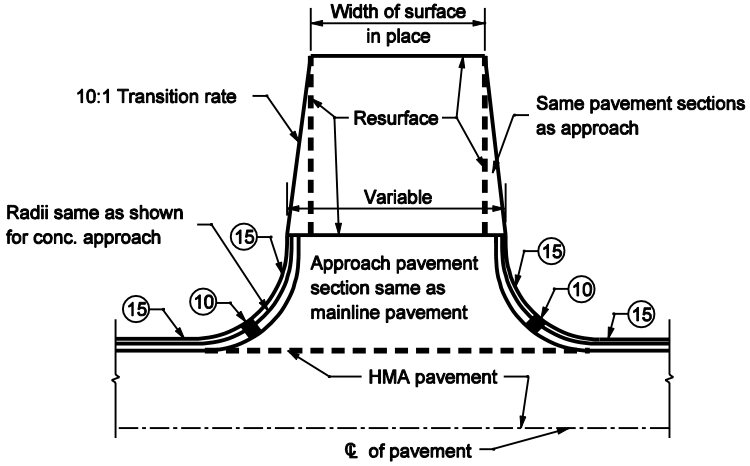

STREET APPROACH
WITH HMA MAINLINE PAVEMENT

GENERAL NOTES

1. Provide radii of 30' or more at major cross streets where WB-15 trucks and or buses turn repeatedly.
2. Provide radii of 60' or more at the intersection of two State or U.S. highways and streets servicing heavy industrial areas requiring repeated turns by the Indiana Single Unit Vehicle.
3. Ear construction Type B as shown on Standard Drawing E 605-ERCN-02 will be permitted.
4. See General Notes on Standard Drawing E 610-PRAP-11.

LEGEND

- Ⓐ PCCP
- Ⓚ HMA pavement
- ⑤ Longitudinal joint
- ⑦ Keyway joint
- ⑨ 1" Preformed joint filler
- ⑩ ½" Preformed joint filler
- ⑭ Integral concrete curb
- ⑮ Combined curb and gutter
- ⑳ Contraction joint

INDIANA DEPARTMENT OF TRANSPORTATION

STREET APPROACH WITH PCCP OR HMA MAINLINE PAVEMENT

SEPTEMBER 2002

STANDARD DRAWING NO. E 610-PRAP-14

RICHARD L. VANCLEAVE REGISTERED No. 9750 STATE OF INDIANA PROFESSIONAL ENGINEER

DESIGN STANDARDS ENGINEER

/s/ Richard L VanCleave 9-03-02
DESIGN STANDARDS ENGINEER DATE

/s/ Richard K. Smulzer 9-03-02
CHIEF HIGHWAY ENGINEER DATE

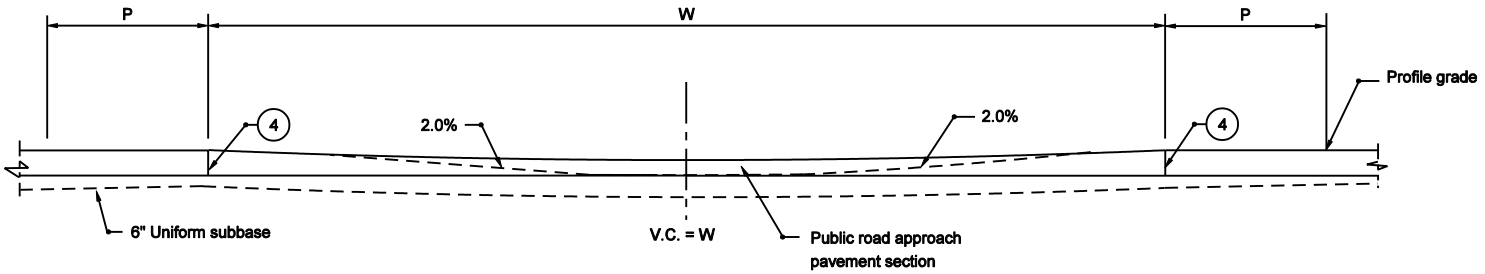

SECTION A-A

LEGEND

(3) Construction joint type D-1. See Standard Drawing E 503-CCPJ-01 for details.

(4) Longitudinal keyway joint, if pavement is PCCP. See Standard Drawing E 503-CCPJ-04 for details.

(8) Longitudinal contraction joint. See Standard Drawings E 503-CCPJ-07 AND -08 for details.

(9) 1" preformed joint filler

(10) Ear construction type A. See Standard Drawing E 605-ERCN-01 for details.

(11) Ear construction type B. See Standard Drawing E 605-ERCN-02 for details.

(14) Integral concrete curb

L = Minimum longitudinal length of crossover

P = Travel lane or turn lane width

W = Width of median

V.C. = Vertical curve length

= Stabilized shoulder

GENERAL NOTES :

1. The crossover length L is based on a 90° road intersection.
2. PCCP crossover shall be constructed if the cross road approach is concrete HMA crossover shall be constructed if the cross road approach asphalt.
3. See Standard Drawings E 610-PRCO-01A through -07 for crossover plans.

INDIANA DEPARTMENT OF TRANSPORTATION

PUBLIC ROAD CROSSOVER SECTION

MARCH 2003

STANDARD DRAWING NO. E 610-PRCO-01

ANTHONY L. UREMOVICH REGISTERED No. 18095 STATE OF INDIANA PROFESSIONAL ENGINEER

DESIGN STANDARDS ENGINEER

/s/ Anthony L.Uremovich 3-03-03
DESIGN STANDARDS ENGINEER DATE

/s/ Richard K.Smutzer 3-03-03
CHIEF HIGHWAY ENGINEER DATE

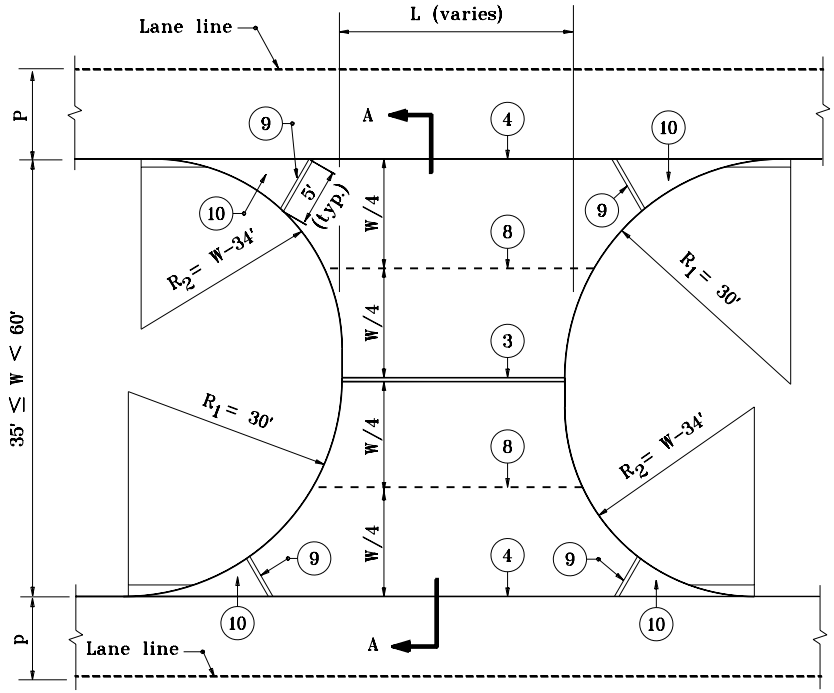

CROSSOVER PLAN FOR MEDIAN WIDTH OF 35 ft OR GREATER BUT LESS THAN 60 ft

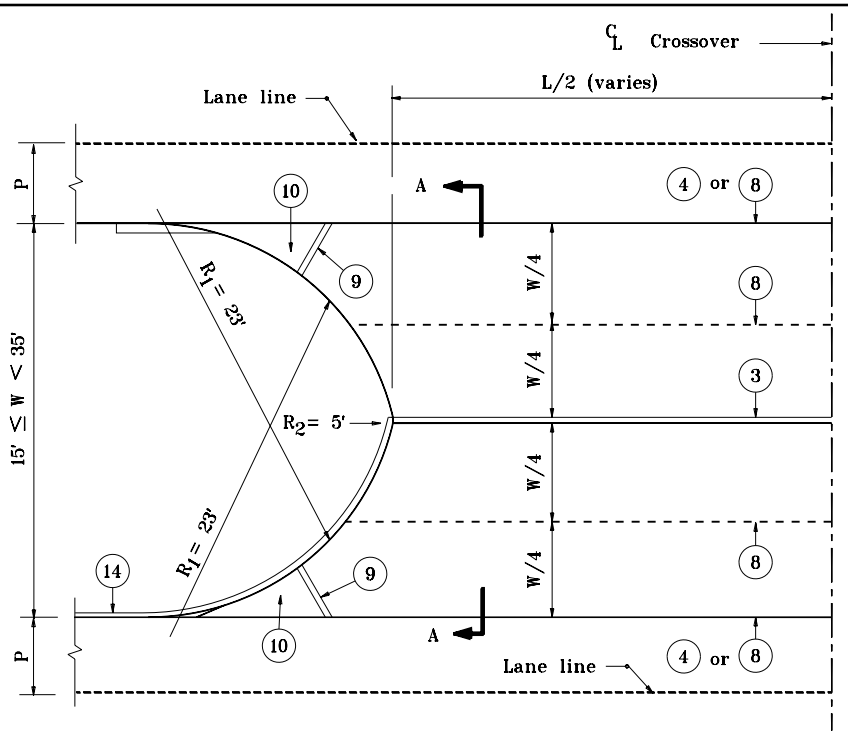

CROSSOVER PLAN FOR MEDIAN WIDTH OF 15 ft OR GREATER BUT LESS THAN 35 ft

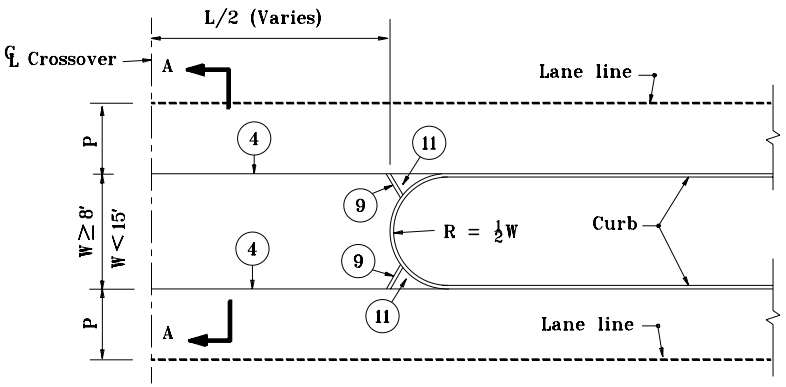

CROSSOVER PLAN FOR MEDIAN WIDTH OF 8 ft OR GREATER BUT LESS THAN 15 ft

NOTES :

1. For median width W of 60' or greater, R = 30'.
2. For median width W of less than 8', L = 100' min.
3. See Standard Drawing E 610-PRCO-01 for Legend and Section A-A.

(8) Use construction joint in place of keyway joint if W is 32' or more.

INDIANA DEPARTMENT OF TRANSPORTATION

PUBLIC ROAD CROSSOVER PLANS

MAY 2000

STANDARD DRAWING NO. **E 610-PRCO-01A**

ANTHONY L. UREMOVICH REGISTERED No. 18095 STATE OF INDIANA PROFESSIONAL ENGINEER

DESIGN STANDARDS ENGINEER

/s/ Anthony L. Uremovich 5-01-00
DESIGN STANDARDS ENGINEER — DATE

/s/ Firooz Zandi 5-01-00
CHIEF HIGHWAY ENGINEER — DATE

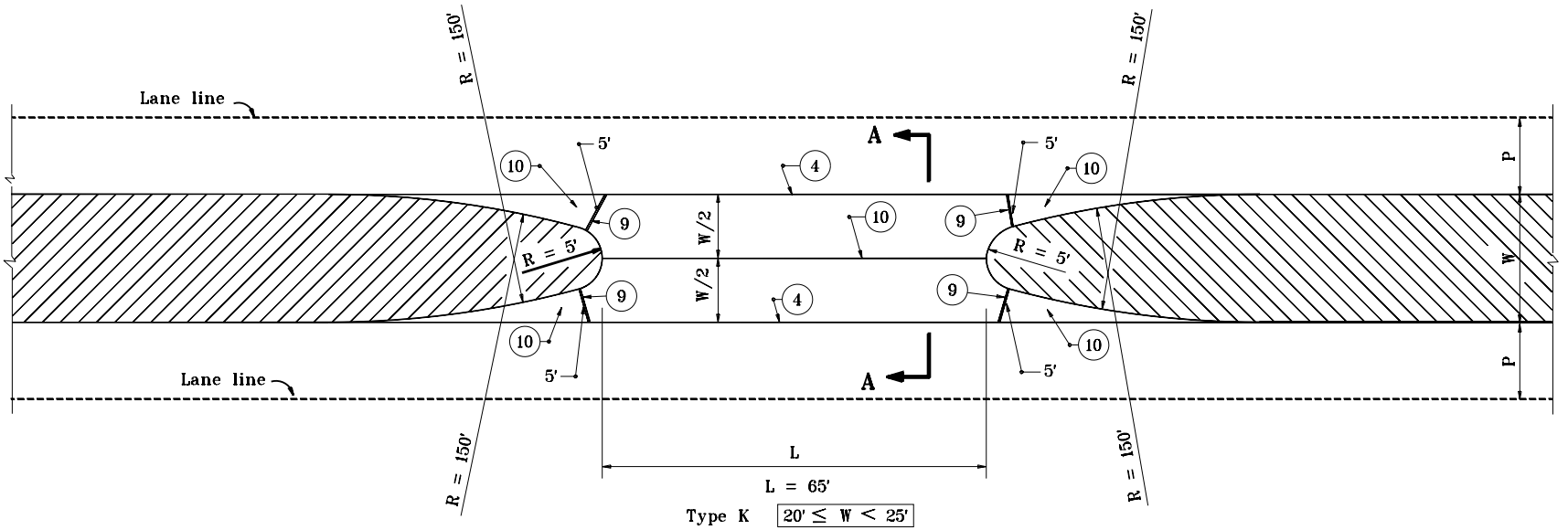

PLAN

NOTES :

1. See Standard Drawing E 610-PRCO-01 for Legend and Section A-A.

INDIANA DEPARTMENT OF TRANSPORTATION

PUBLIC ROAD CROSSOVERS TYPE K & L

MAY 2000

STANDARD DRAWING NO. **E 610-PRCO-02**

ANTHONY L. UREMOVICH REGISTERED No. 18095 STATE OF INDIANA PROFESSIONAL ENGINEER

DESIGN STANDARDS ENGINEER

/s/ Anthony L. Uremovich 5-01-00
DESIGN STANDARDS ENGINEER — DATE

/s/ Firooz Zandi 5-01-00
CHIEF HIGHWAY ENGINEER — DATE

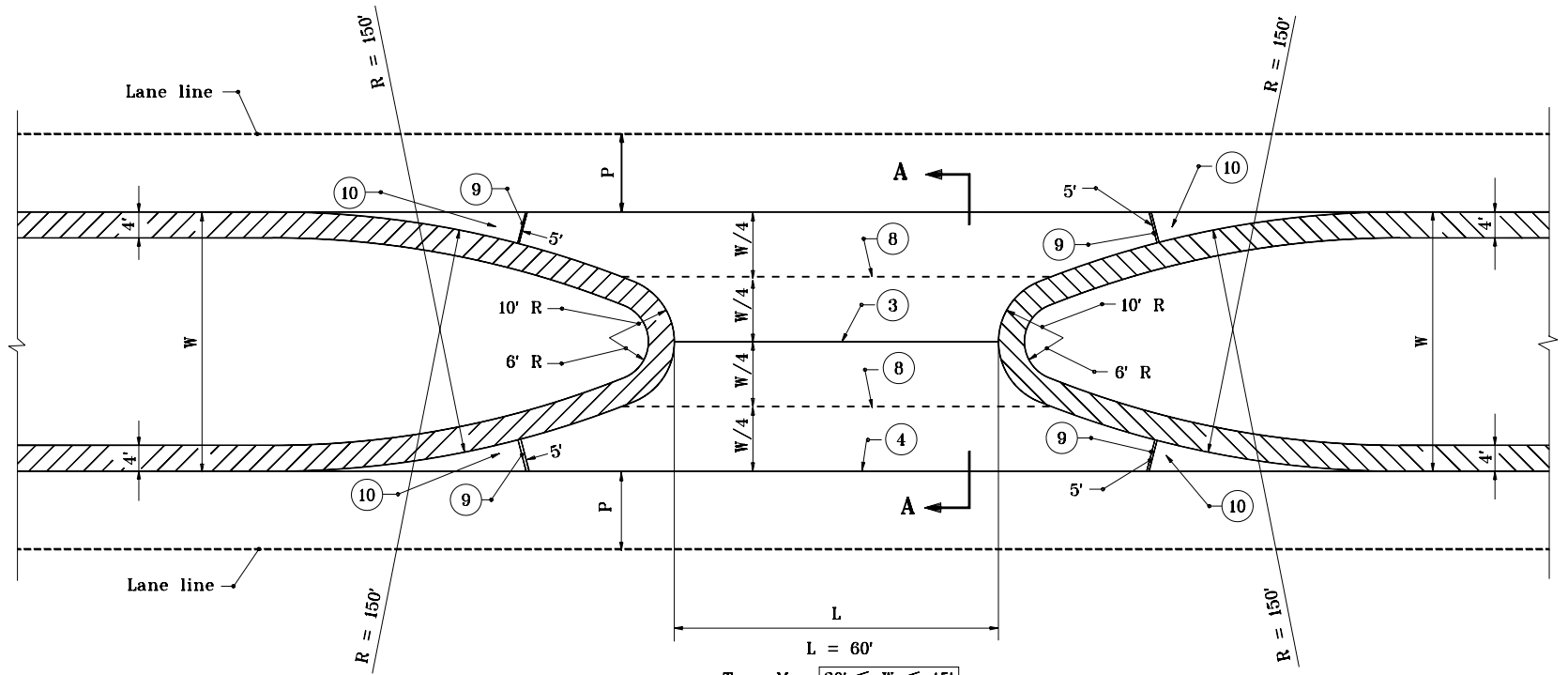

PLAN

NOTES :

1. See Standard Drawing E 610-PRCO-01 for Legend and Section A-A.

INDIANA DEPARTMENT OF TRANSPORTATION

PUBLIC ROAD CROSSOVERS TYPE M & N

MAY 2000

STANDARD DRAWING NO. **E 610-PRCO-03**

ANTHONY L. UREMOVICH REGISTERED No. 18095 STATE OF INDIANA PROFESSIONAL ENGINEER

DESIGN STANDARDS ENGINEER

/s/ Anthony L. Uremovich 5-01-00
DESIGN STANDARDS ENGINEER — DATE

/s/ Firooz Zandi 5-01-00
CHIEF HIGHWAY ENGINEER — DATE

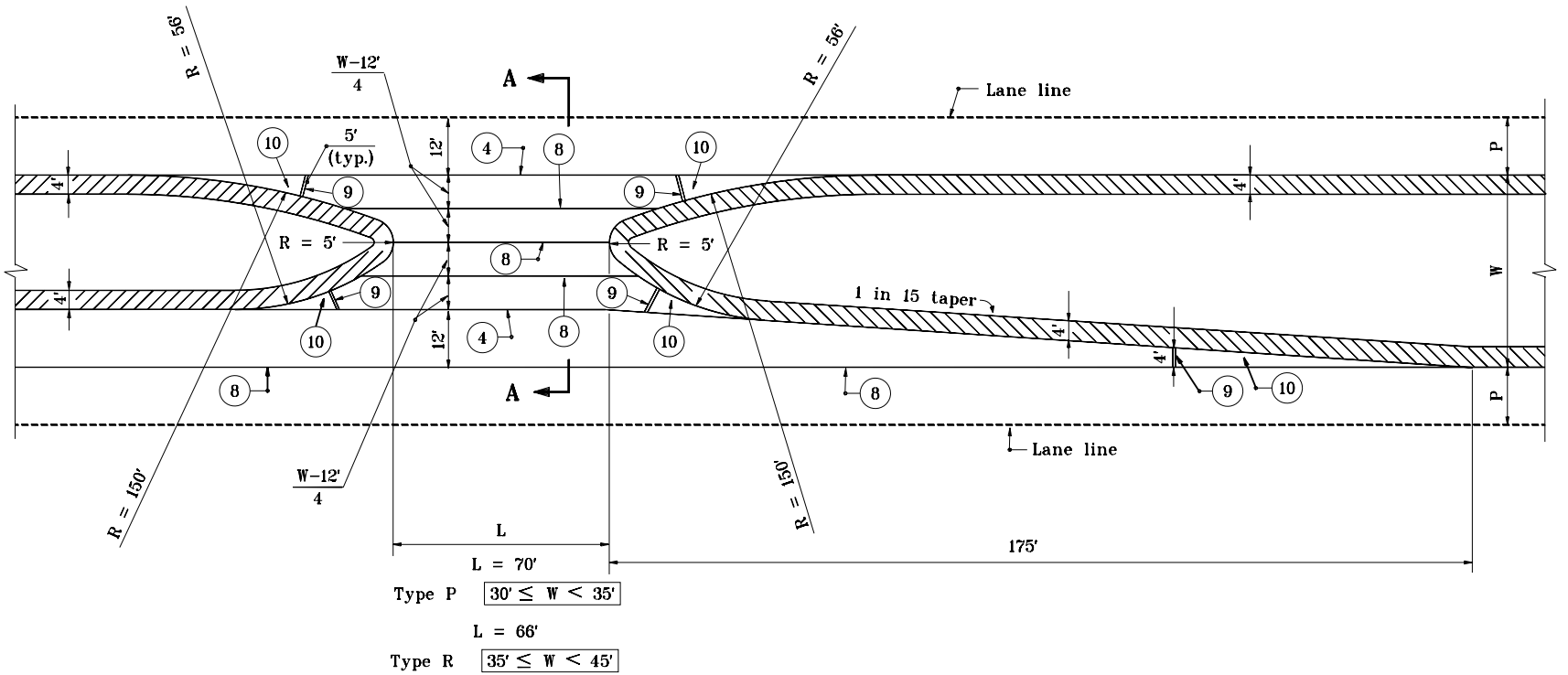

L = 70'

Type P $30' \leq W < 35'$

L = 66'

Type R $35' \leq W < 45'$

PLAN

NOTES :

1. See Standard Drawing E 610-PRCO-01 for Legend and Section A-A.

INDIANA DEPARTMENT OF TRANSPORTATION

PUBLIC ROAD CROSSOVERS TYPE P & R

MAY 2000

STANDARD DRAWING NO. **E 610-PRCO-04**

ANTHONY L. UREMOVICH REGISTERED No. 18095 STATE OF INDIANA PROFESSIONAL ENGINEER

DESIGN STANDARDS ENGINEER

/s/ Anthony L. Uremovich 5-01-00
DESIGN STANDARDS ENGINEER — DATE

/s/ Firooz Zandi 5-01-00
CHIEF HIGHWAY ENGINEER — DATE

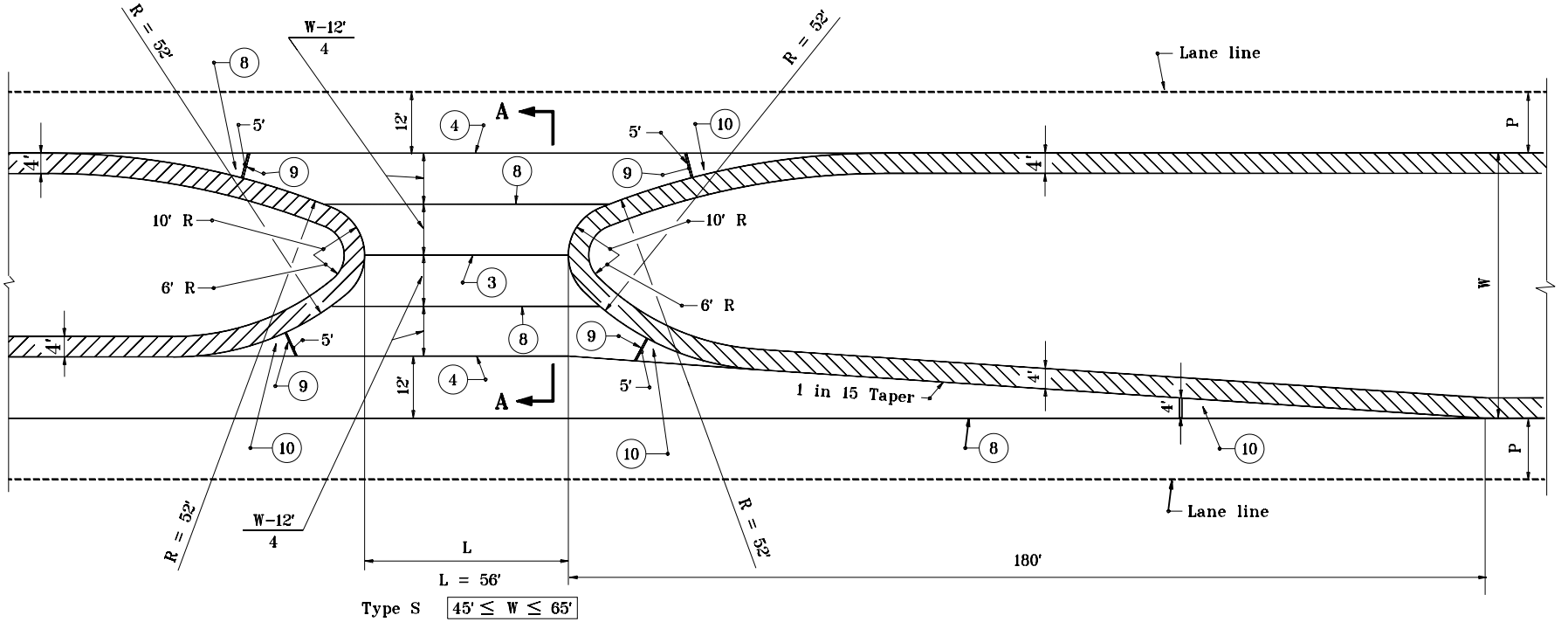

PLAN

NOTES :

1. See Standard Drawing E 610-PRCO-01 for Legend and Section A-A.

INDIANA DEPARTMENT OF TRANSPORTATION

PUBLIC ROAD CROSSOVER TYPE S

MAY 2000

STANDARD DRAWING NO. **E 610-PRCO-05**

ANTHONY L. UREMOVICH REGISTERED No. 18095 STATE OF INDIANA PROFESSIONAL ENGINEER

DESIGN STANDARDS ENGINEER

/s/ Anthony L. Uremovich 5-01-00
DESIGN STANDARDS ENGINEER — DATE

/s/ Firooz Zandi 5-01-00
CHIEF HIGHWAY ENGINEER — DATE

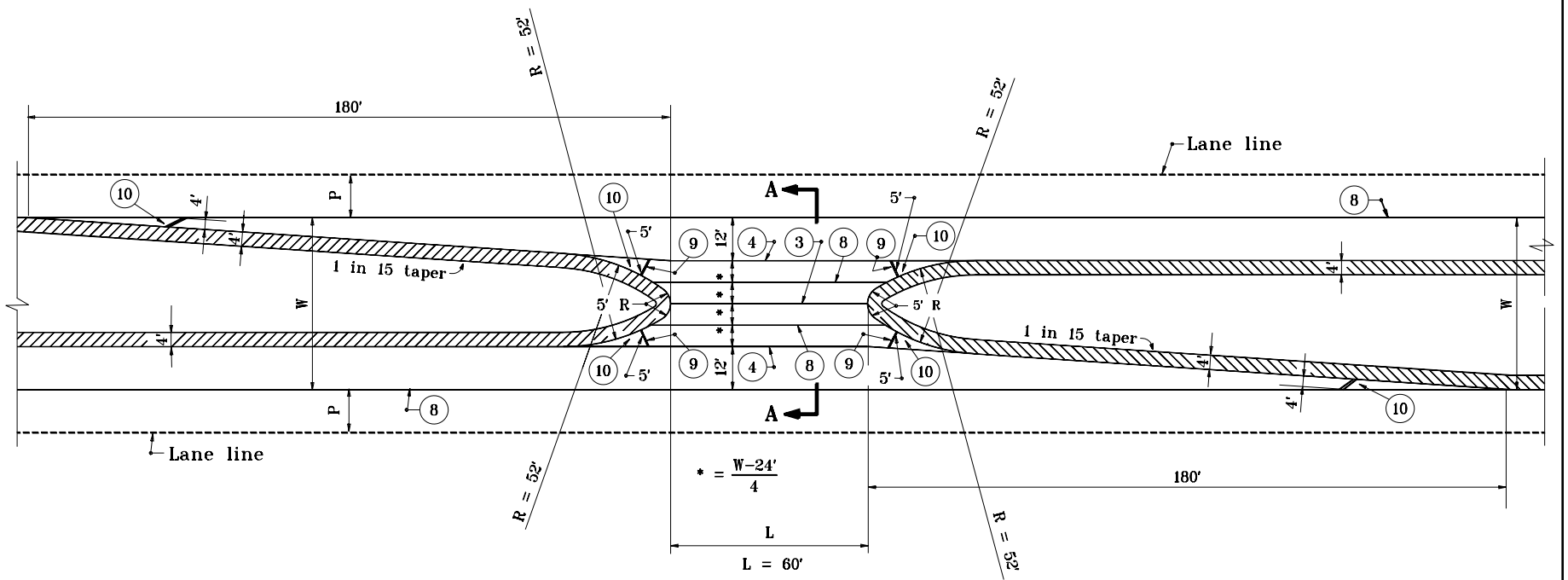

PLAN

NOTES :

1. See Standard Drawing E 610-PRCO-01 for Legend and Section A-A .

INDIANA DEPARTMENT OF TRANSPORTATION

PUBLIC ROAD CROSSOVERS TYPE T & U

MAY 2000

STANDARD DRAWING NO. **E 610-PRCO-06**

ANTHONY L. UREMOVICH REGISTERED No. 18095 STATE OF INDIANA PROFESSIONAL ENGINEER

DESIGN STANDARDS ENGINEER

/s/ Anthony L. Uremovich 5-01-00
DESIGN STANDARDS ENGINEER — DATE

/s/ Firooz Zandi 5-01-00
CHIEF HIGHWAY ENGINEER — DATE

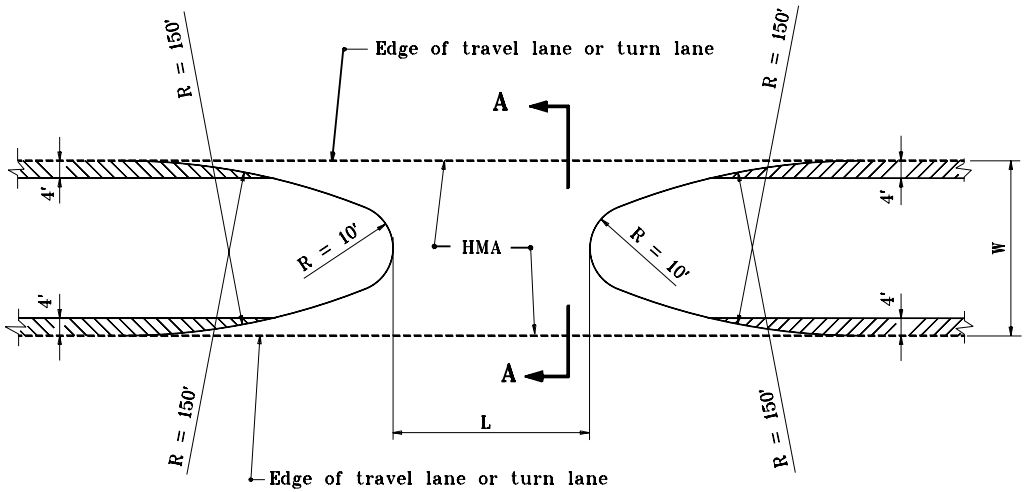

PLAN

NOTES :

1. Plan dimensions for HMA pavement crossover shall be as shown for PCCP on Standard Drawings E 610-PRCO-01A through -07.

2. See Standard Drawing E 610-PRCO-01 for Legend and Section A-A.

INDIANA DEPARTMENT OF TRANSPORTATION

PUBLIC ROAD CROSSOVER PLAN FOR HMA PAVEMENT

MAY 2000

STANDARD DRAWING NO. **E 610-PRCO-07**

ANTHONY L. UREMOVICH REGISTERED No. 18095 STATE OF INDIANA PROFESSIONAL ENGINEER

DESIGN STANDARDS ENGINEER

/s/ Anthony L. Uremovich 5-01-00
DESIGN STANDARDS ENGINEER — DATE

/s/ Firooz Zandi 5-01-00
CHIEF HIGHWAY ENGINEER — DATE

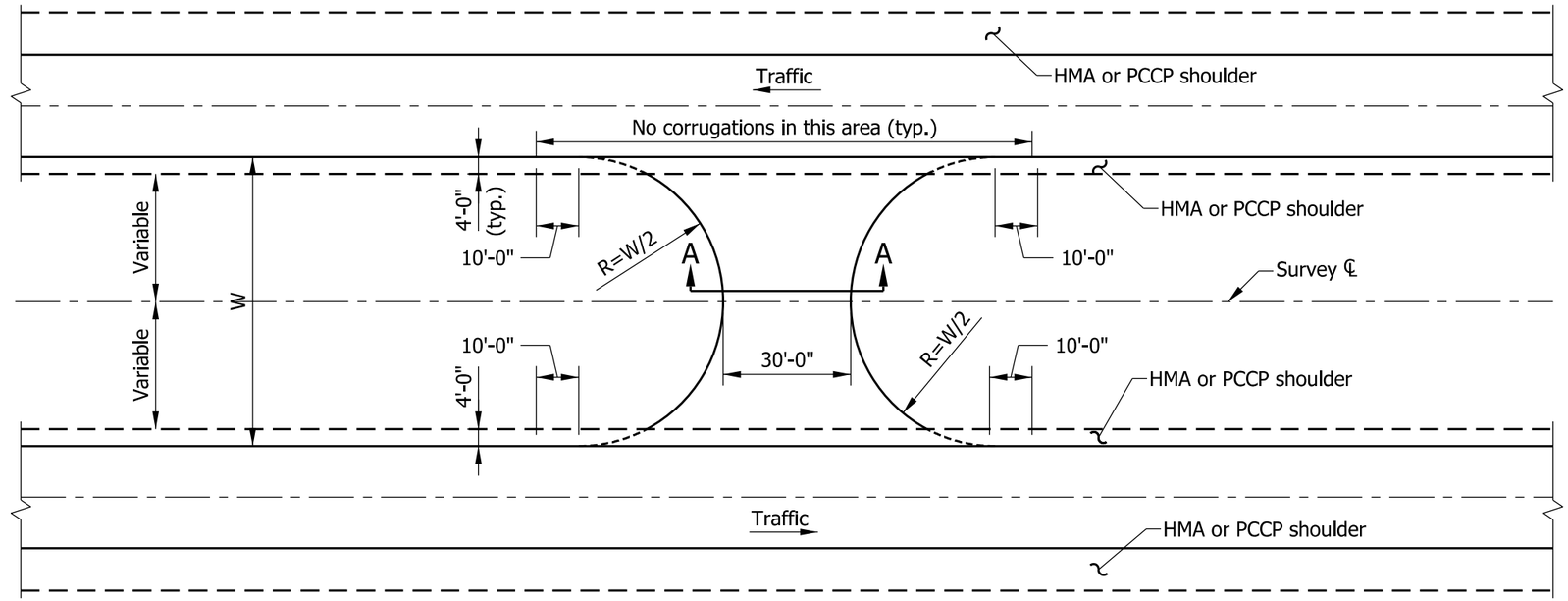

PLAN

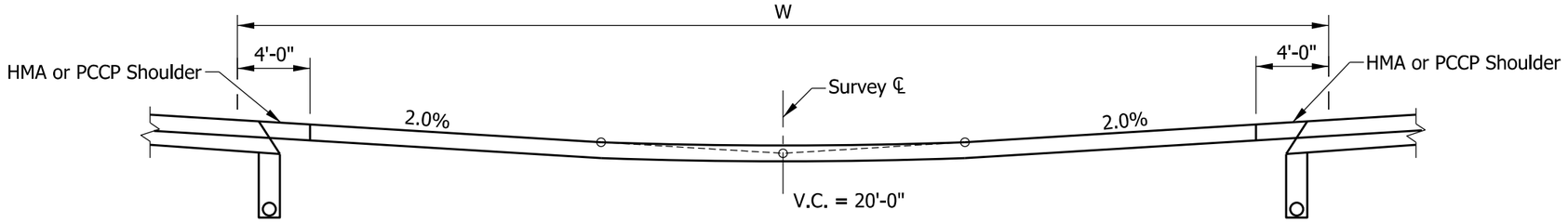

GRADE OF U-TURN MEDIAN OPENING

Vertical scale exaggerated for clarity

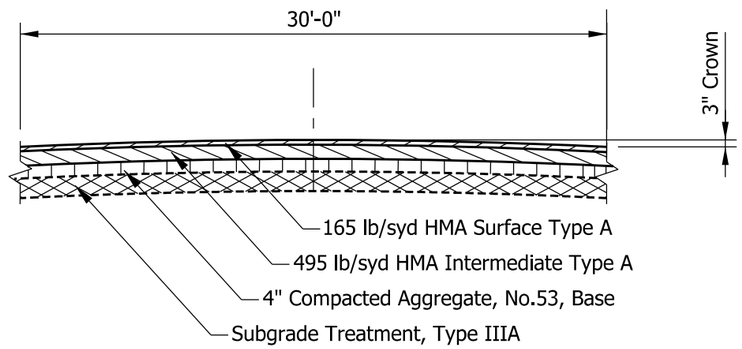

SECTION A-A

Vertical scale exaggerated for clarity

INDIANA DEPARTMENT OF TRANSPORTATION

U-TURN MEDIAN OPENING

SEPTEMBER 2013

STANDARD DRAWING NO. E 610-UTMO-01

RICHARD L. VanCLEAVE REGISTERED No. 9750 STATE OF INDIANA PROFESSIONAL ENGINEER

/s/ Richard L. VanCleave 02/04/13

DESIGN STANDARDS ENGINEER DATE

/s/ Mark A. Miller 03/27/13

CHIEF ENGINEER DATE

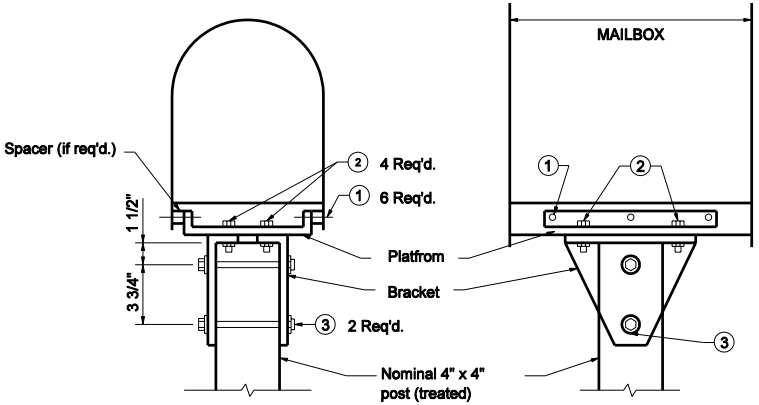

WITH WOOD POST

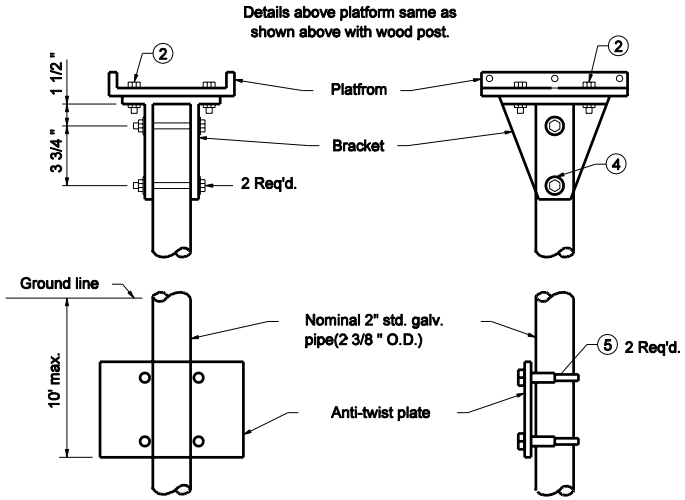

WITH PIPE POST

LEGEND

1. #8-32 x "L" truss head machine screw with two #8 flat washers, #8 lock washers, and #8 hex nut.
2. 5/16"-18 x 3/4" hex cap screw with two 5/16" flat washers, 5/16" lock washer and 5/16" hex nut.
3. 5/16"-18 x 4 1/2" hex cap screw with two 5/16" flat washers, 5/16" lock washer, and 5/16" hex nut.
4. 5/16"-18 x 3" hex cap screw with two 5/16" flat washers, 5/16" lock washer, and 5/16" hex nut.
5. Nominal 2 3/4" muffler clamp
6. For platfrom, bracket, shelf, spacer and anti-twist plate details, see Standard Drawing E 611-MBAS-03.

INDIANA DEPARTMENT OF TRANSPORTATION

SINGLE MAILBOX ASSEMBLY

MARCH 2005

STANDARD DRAWING NO. E 611-MBAS-01

RICHARD L. VanCLEAVE REGISTERED No. 9750 STATE OF INDIANA PROFESSIONAL ENGINEER

DESIGN STANDARDS ENGINEER

/s/ Richard L.VanCleave 3-01-05
DESIGN STANDARDS ENGINEER DATE

/s/ Richard K.Smutzer 3-01-05
CHIEF HIGHWAY ENGINEER DATE

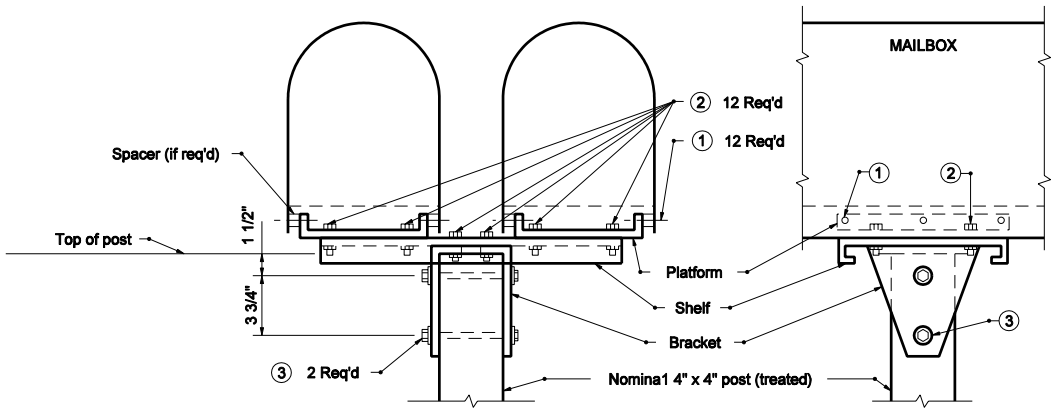

WITH WOOD POST

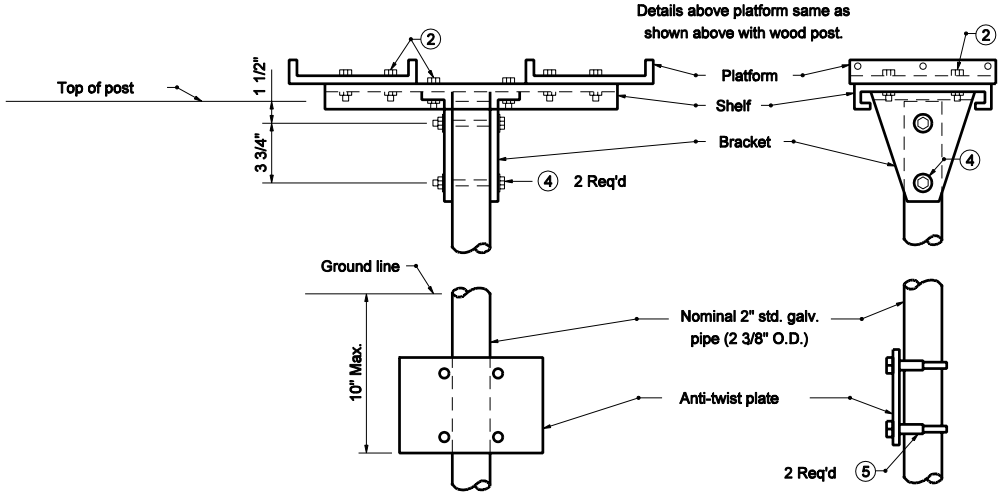

WITH PIPE POST

LEGEND

① #8-32 x "L" truss head machine screw with two #8 flat washers, #8 lock washers, and #8 hex nut.

② 5/16"-18 x 3/4" hex cap screw with two 5/16" flat washers, 5/16" lock washer and 5/16" hex nut.

③ 5/16"-18 x 4 1/2" hex cap screw with two 5/16" flat washers, 5/16" lock washer, and 5/16" hex nut.

④ 5/16"-18 x 3" hex cap screw with two 5/16" flat washers, 5/16" lock washer, and 5/16" hex nut.

⑤ Nominal 2 3/4" muffler clamp

⑥ For platfrom, bracket, shelf, spacer and anti-twist plate details, see Standard Drawing E 611-MBAS-03.

INDIANA DEPARTMENT OF TRANSPORTATION

DOUBLE MAILBOX ASSEMBLY

MARCH 2005

STANDARD DRAWING NO. E 611-MBAS-02

RICHARD L. VanCLEAVE REGISTERED No. 9750 STATE OF INDIANA PROFESSIONAL ENGINEER

DESIGN STANDARDS ENGINEER

/s/ Richard L.VanCleave 3-01-05
DESIGN STANDARDS ENGINEER DATE

/s/ Richard K.Smutzer 3-01-05
CHIEF HIGHWAY ENGINEER DATE

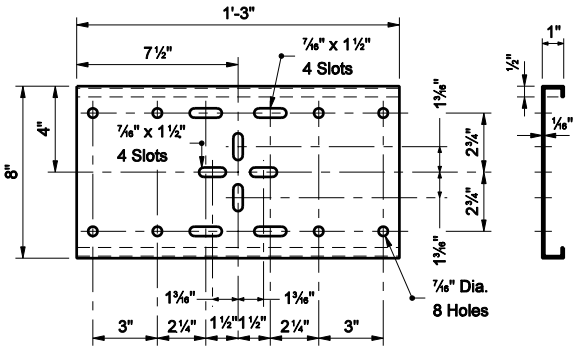

SHELF

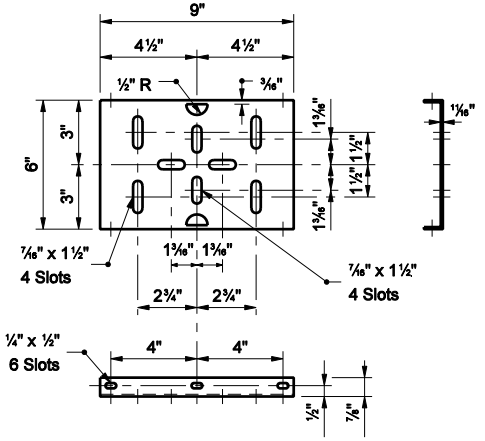

PLATFORM

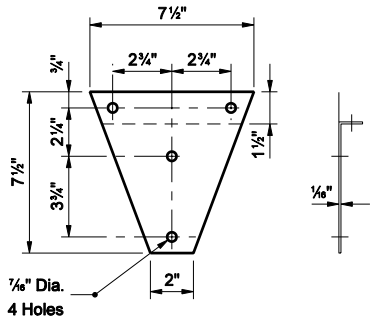

BRACKET

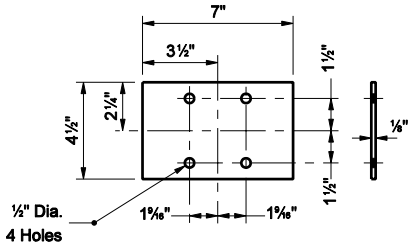

ANTI-TWIST PLATE

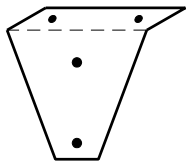

FINISHED BRACKET
ISOMETRIC

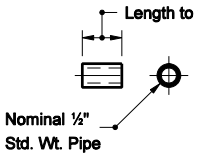

SPACER

INDIANA DEPARTMENT OF TRANSPORTATION

MAILBOX SUPPORT HARDWARE

MARCH 2005

STANDARD DRAWING NO. E 611-MBAS-03

RICHARD L. VanCLEAVE REGISTERED No. 9750 STATE OF INDIANA PROFESSIONAL ENGINEER

DESIGN STANDARDS ENGINEER

/s/ Richard L.VanCleave 3-01-05
DESIGN STANDARDS ENGINEER DATE

/s/ Richard K.Smutzer 3-01-05
CHIEF HIGHWAY ENGINEER DATE

GENERAL NOTES

(2) See plans for W

(5) The normal height range is 3'-3 to 3'-11. Contact the local postmaster to establish appropriate installation height.

(6) Established by the U.S. Postal Service, usually 3'-4 to 4'-0.

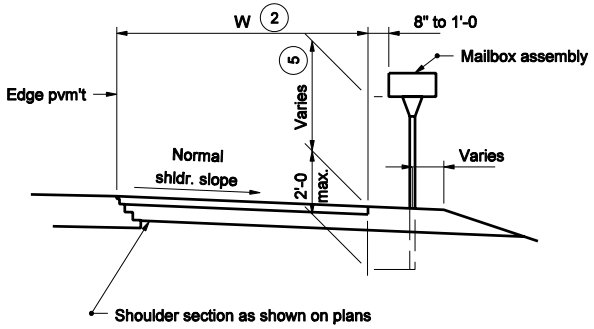

NORMAL SHOULDER SECTION

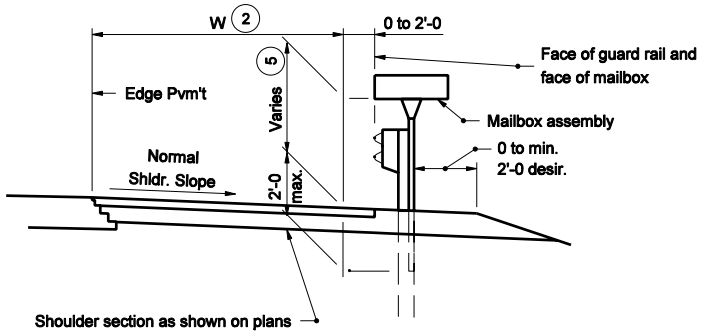

SHOULDER SECTION WITH GUARDRAIL

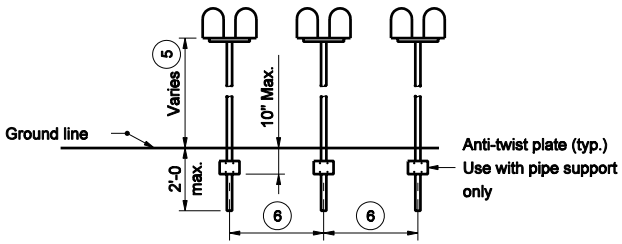

SPACING FOR MULTIPLE POST INSTALLATION

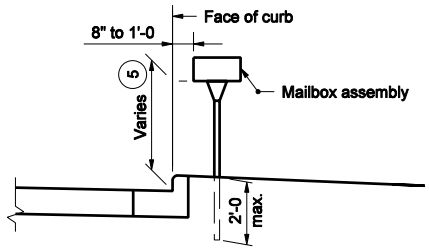

CURBED SECTION

INDIANA DEPARTMENT OF TRANSPORTATION

MAILBOX ASSEMBIES ELEVATION VIEW

MARCH 2005

STANDARD DRAWING NO. E 611-MBAS-04

RICHARD L. VanCLEAVE REGISTERED No. 9750 STATE OF INDIANA PROFESSIONAL ENGINEER

DESIGN STANDARDS ENGINEER

/s/ Richard L. VanCleave 3-01-05
DESIGN STANDARDS ENGINEER DATE

/s/ Richard K. Smutzer 3-01-05
CHIEF HIGHWAY ENGINEER DATE

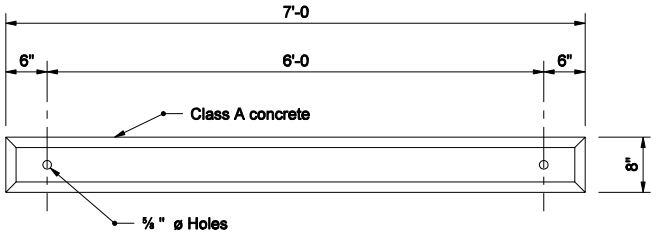

TOP VIEW

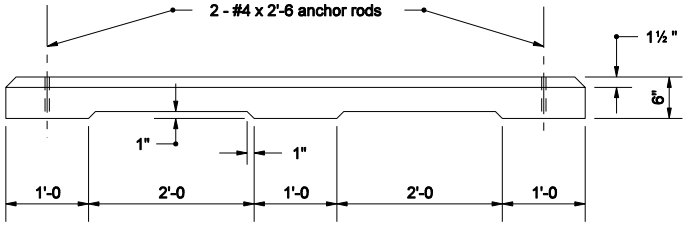

SIDE VIEW

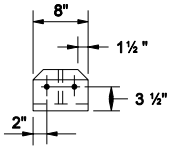

END VIEW

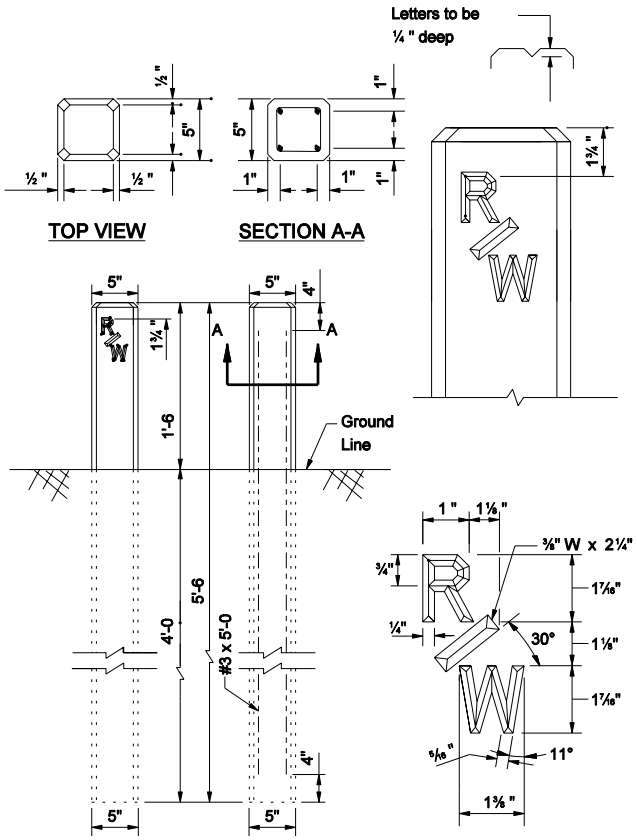

INDIANA DEPARTMENT OF TRANSPORTATION

RIGHT-OF-WAY MARKER AND CONCRETE PARKING BARRIER

MARCH 2004

STANDARD DRAWING NO. E 615-RWPB-01

RICHARD L. VanCLEAVE REGISTERED No. 9750 STATE OF INDIANA PROFESSIONAL ENGINEER

DESIGN STANDARDS ENGINEER

/s/ Richard L. VanCleave X-OX-OX
DESIGN STANDARDS ENGINEER DATE

/s/ Richard K. Smutzer X-OX-OX
CHIEF HIGHWAY ENGINEER DATE

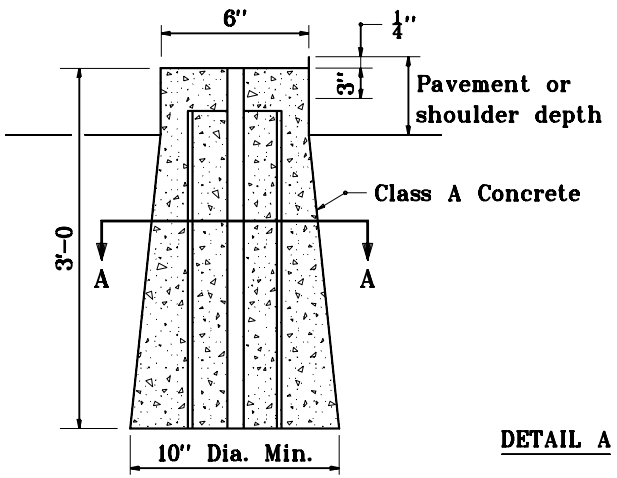

DETAIL A

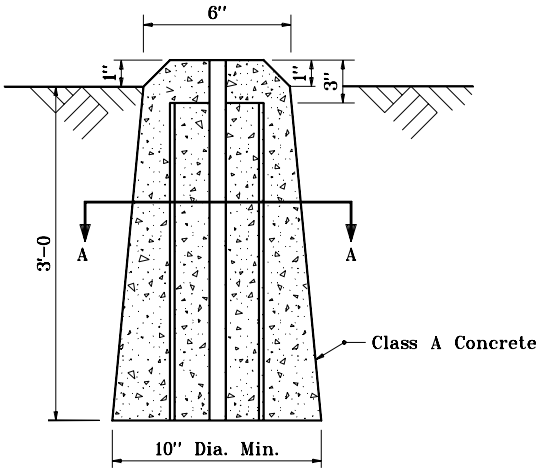

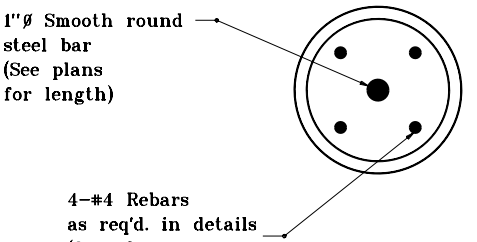

SECTION A-A

INSIDE PAVEMENT OR SHOULDER AREA

OUTSIDE PAVEMENT OR SHOULDER AREA

NEW SECTION CORNER MONUMENT INSTALLATION

NOTES

1. If the existing section corner monument is 0 to 1 ft below surface, it shall be removed and replaced as shown in Detail A.

2. If the existing section corner monument is over 1 ft to 3 ft below surface, the county surveyor shall determine whether it shall remain in place or be replaced. If the monument is to be replaced, the installation shall be as shown in Detail A. If the existing monument is to remain in place, it shall be extended as shown in Detail A.

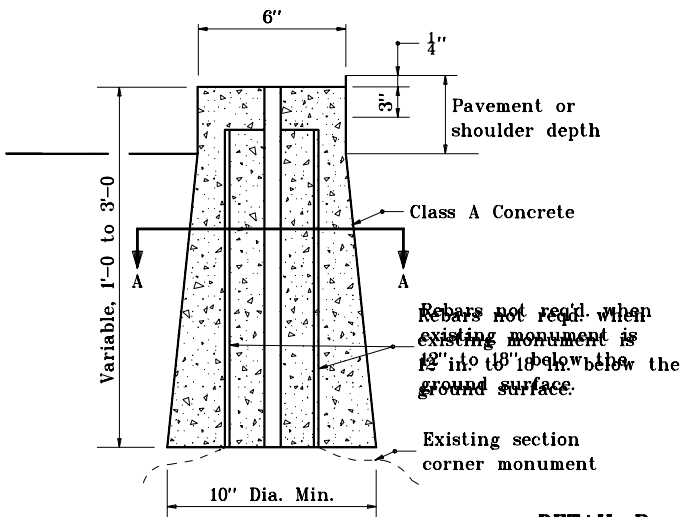

DETAIL B

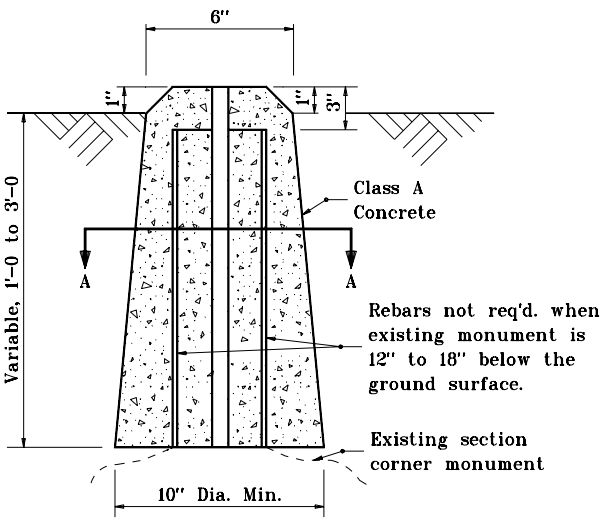

INSIDE PAVEMENT OR SHOULDER AREA

OUTSIDE PAVEMENT OR SHOULDER AREA

EXTENSION OF EXISTING SECTION CORNER MONUMENT

INDIANA DEPARTMENT OF TRANSPORTATION

SECTION CORNER MONUMENTS

APRIL 1995

STANDARD DRAWING NO. **E 615-SCMN-01**

ANTHONY L. URENOVICH REGISTERED No. 18095 STATE OF INDIANA PROFESSIONAL ENGINEER

DESIGN STANDARDS ENGINEER

DETAILS PLACED IN THIS FORMAT 11-15-99

/s/ Anthony L. Uremovich 11-15-99
DESIGN STANDARDS ENGINEER DATE

/s/ Firooz Zandi 11-15-99
CHIEF HIGHWAY ENGINEER DATE

ORIGINALLY APPROVED 4-03-95

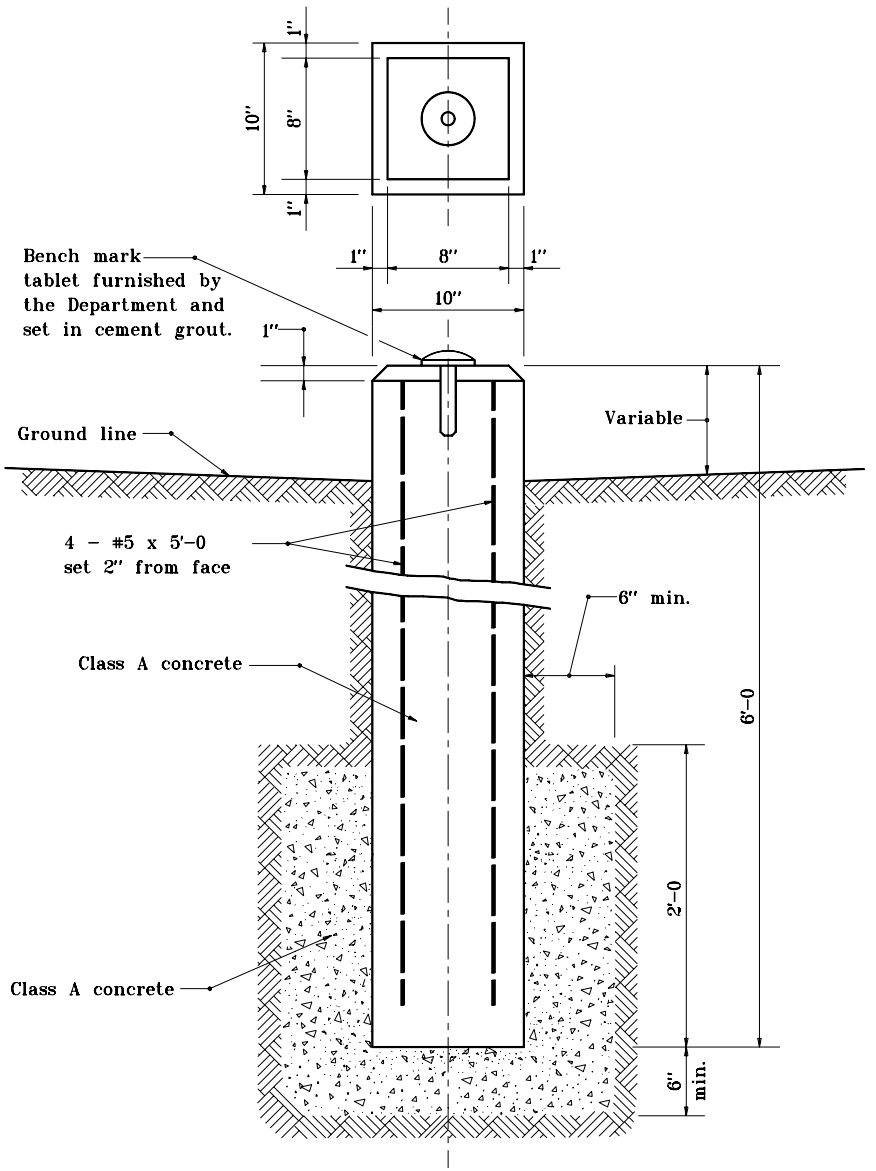

BENCH MARK POST

INDIANA DEPARTMENT OF TRANSPORTATION

BENCH MARK POST

SEPTEMBER 1997

STANDARD DRAWING NO. **E 615-SLBM-01**

ANTHONY L. UREMOVICH REGISTERED No. 18095 STATE OF INDIANA PROFESSIONAL ENGINEER

DESIGN STANDARDS ENGINEER

DETAILS PLACED IN THIS FORMAT	11-15-99
/s/ Anthony L. Uremovich DESIGN STANDARDS ENGINEER	11-15-99 DATE
/s/ Firooz Zandi CHIEF HIGHWAY ENGINEER	11-15-99 DATE
ORIGINALLY APPROVED	9-01-97

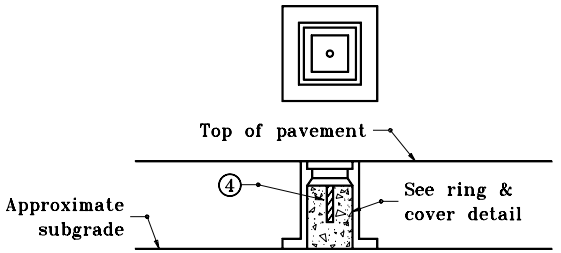

INSTALLATION FOR VITRIFIED BRICK OR BITUMINOUS SURFACE ON CONCRETE BASE (TYPE A)

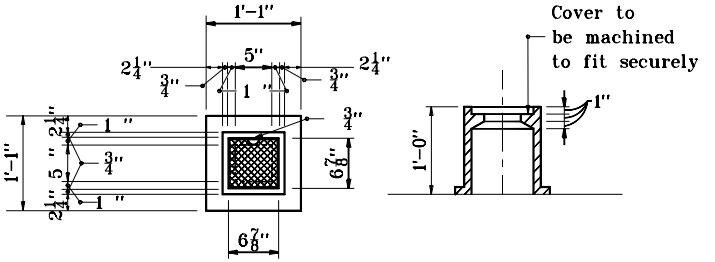

SURVEY LINE MONUMENT RING & COVER

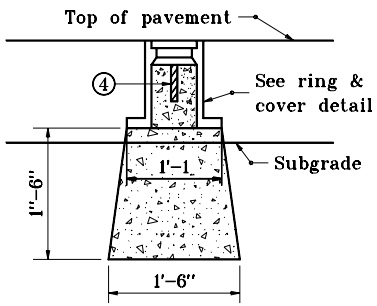

INSTALLATION FOR FLEXIBLE PAVEMENT (TYPE B)

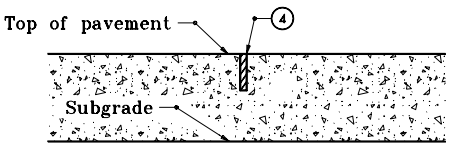

INSTALLATION FOR CONCRETE PAVEMENT (TYPE D)

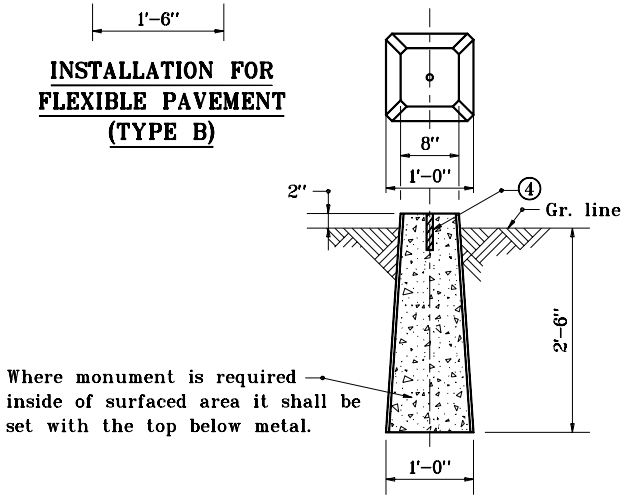

INSTALLATION OUTSIDE OF PAVEMENT (TYPE C)

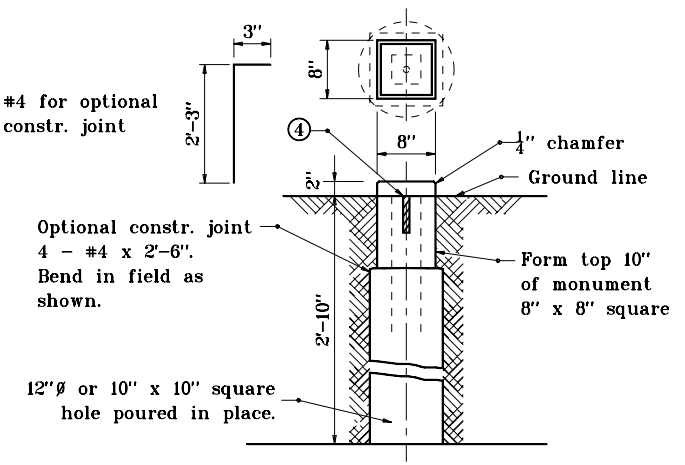

OPTIONAL INSTALLATION FOR TYPE C MONUMENT

GENERAL NOTES

1. Sign shall be white background with black copy.
2. One steel type A or 4" x 4" wood post required.
3. Letter height shall be as follows:
   Border: ½" series D
   Line 1: 1" series B
   Line 2: 1" series B
   Line 3: 1" series B
4. 1"Ø x 5" steel rod

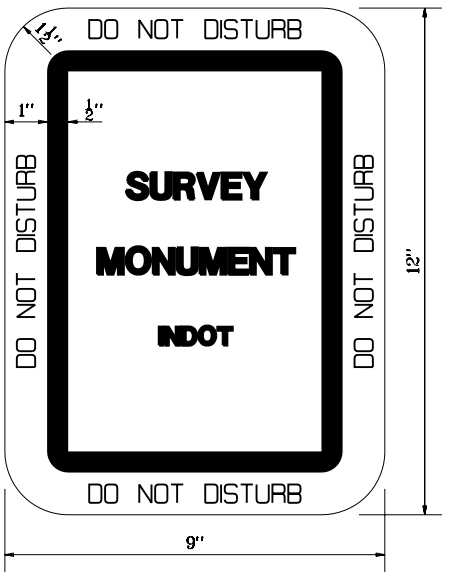

INDIANA DEPARTMENT OF TRANSPORTATION

SURVEY LINE MONUMENTS

SEPTEMBER 1997

STANDARD DRAWING NO. **E 615-SLMN-01**

ANTHONY L. URENOVICH REGISTERED No. 18095 STATE OF INDIANA PROFESSIONAL ENGINEER

DESIGN STANDARDS ENGINEER

DETAILS PLACED IN THIS FORMAT	11-15-99
/s/ Anthony L. Uremovich	11-15-99
DESIGN STANDARDS ENGINEER	DATE
/s/ Firooz Zandi	11-15-99
CHIEF HIGHWAY ENGINEER	DATE
ORIGINALLY APPROVED	9-01-97

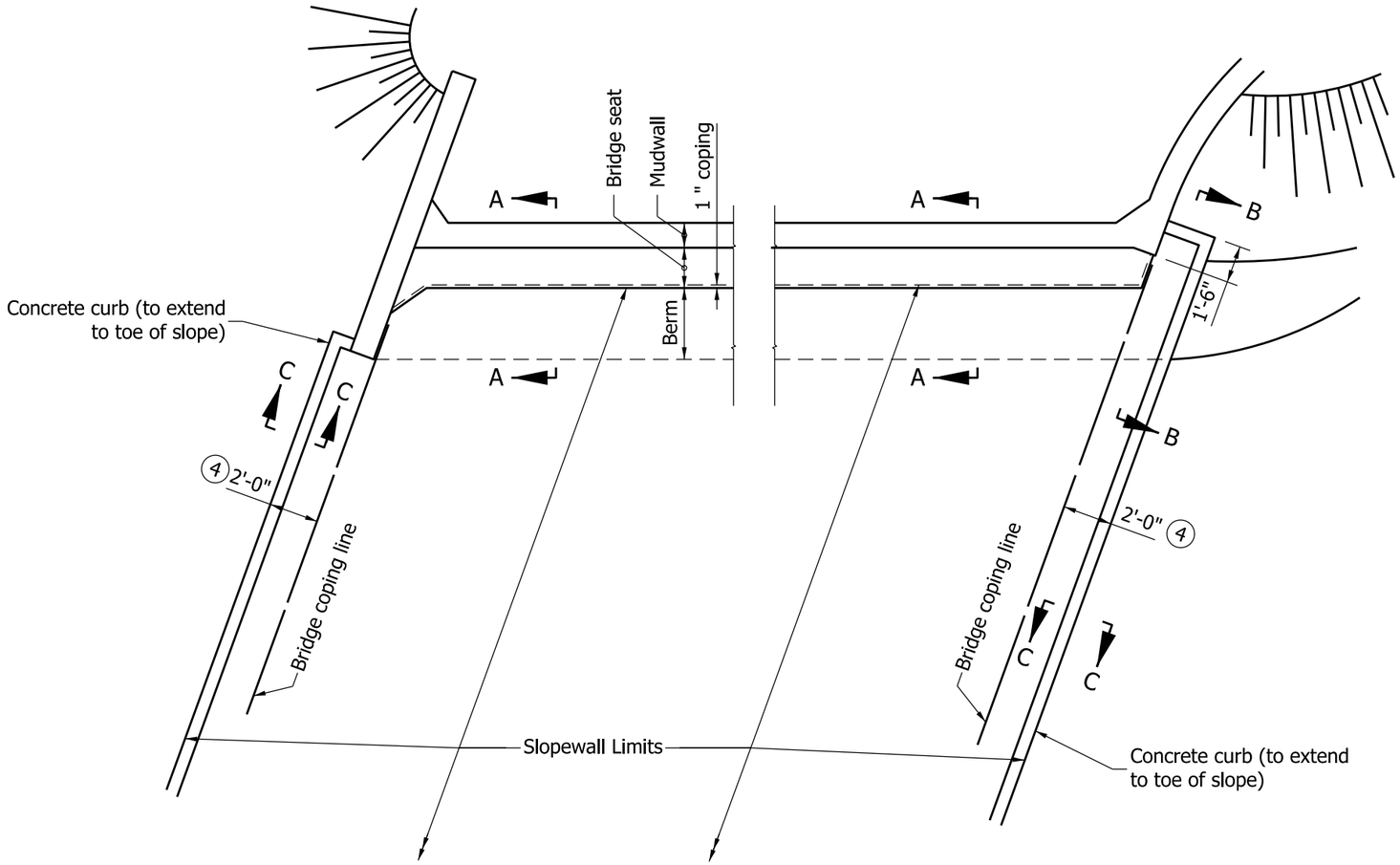

STRAIGHT WINGS

FLARED WINGS

NOTES:

1. See Standard Drawing E 616-SWCO-03 for Sections A-A, B-B, and C-C.
2. When paved slopewall abuts or surrounds columns, piers or other structures, use 1/2" bituminous expansion joint material between slopewall and structure.
3. If slopewall is specified, 1'-0" hand-laid riprap or precast concrete riprap type A may be used.

(4) This dimension shall be increased to 5'-0" where no curb is used on the bridge.

INDIANA DEPARTMENT OF TRANSPORTATION

CONCRETE SLOPEWALL DETAILS

SEPTEMBER 2011

STANDARD DRAWING NO. E 616-SWCO-01

RICHARD L. VanCLEAVE REGISTERED No. 9750 STATE OF INDIANA PROFESSIONAL ENGINEER

DESIGN STANDARDS ENGINEER

/s/ Richard L. VanCleave 9/01/11
DESIGN STANDARDS ENGINEER DATE

/s/ Mark A. Miller 9/01/01
CHIEF HIGHWAY ENGINEER DATE

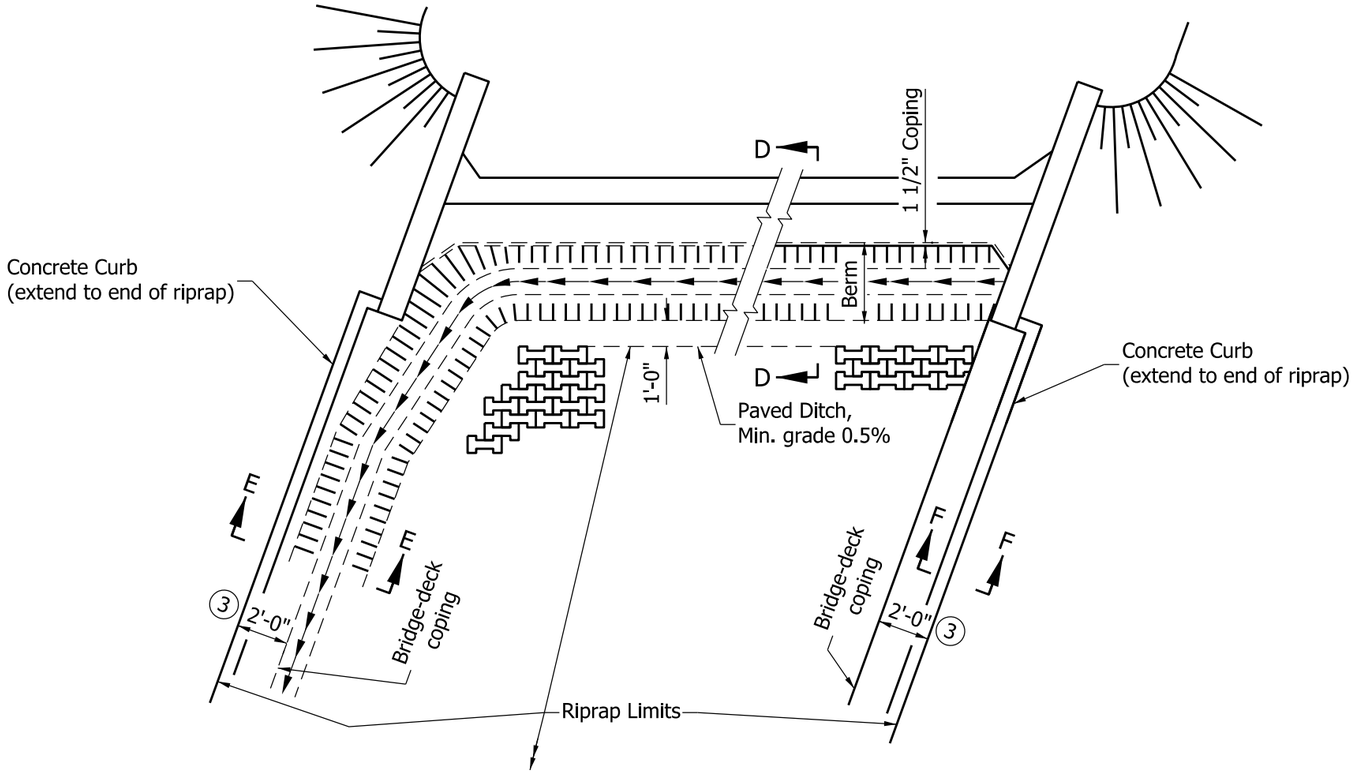

STRAIGHT WINGS

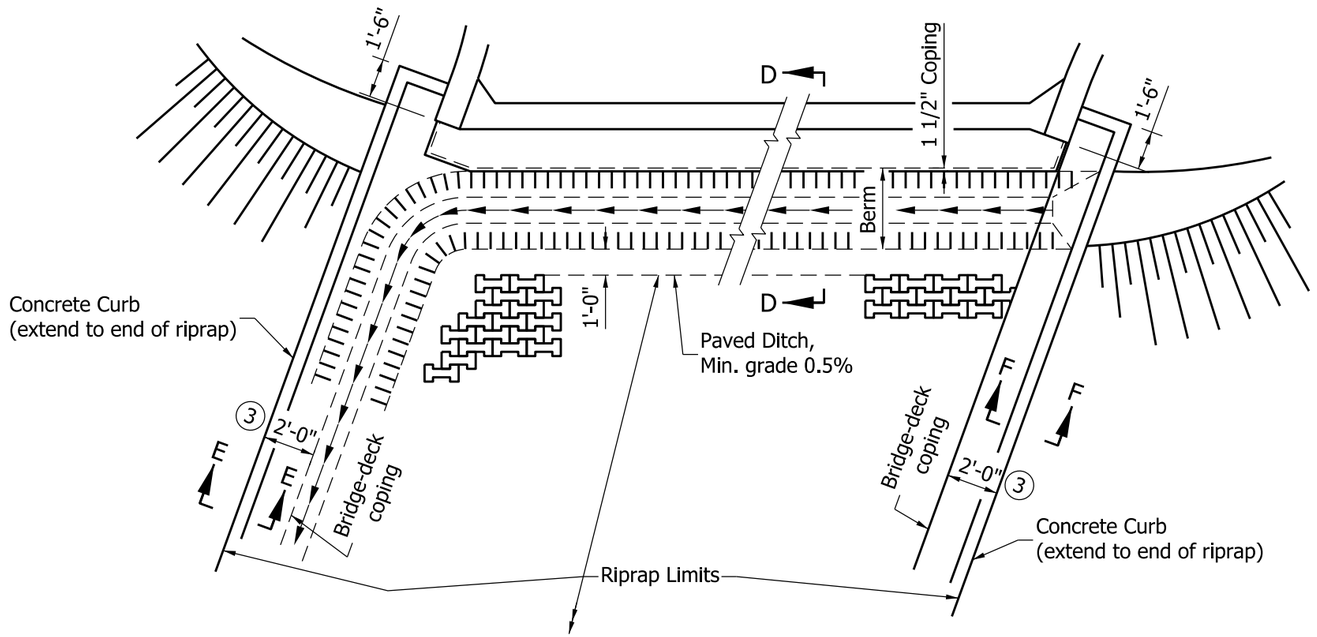

FLARED WINGS

NOTES:

1. These configurations to be used with precast or hand-laid riprap.
2. See Standard Drawing E 616-SWRR-01 for Sections D-D, E-E, and F-F.

(3) This dimension shall be increased to 5'-0" where no curb is used on the bridge.

INDIANA DEPARTMENT OF TRANSPORTATION

DRAINAGE DETAILS
AT END BENTS

SEPTEMBER 2011

STANDARD DRAWING NO. E 616-SWCO-02

RICHARD L. VanCLEAVE
REGISTERED
No. 9750
STATE OF INDIANA
PROFESSIONAL ENGINEER

DESIGN STANDARDS ENGINEER

/s/ Richard L. VanCleave 09/01/11
DESIGN STANDARDS ENGINEER DATE

/s/ Mark A. Miller 09/01/11
CHIEF HIGHWAY ENGINEER DATE

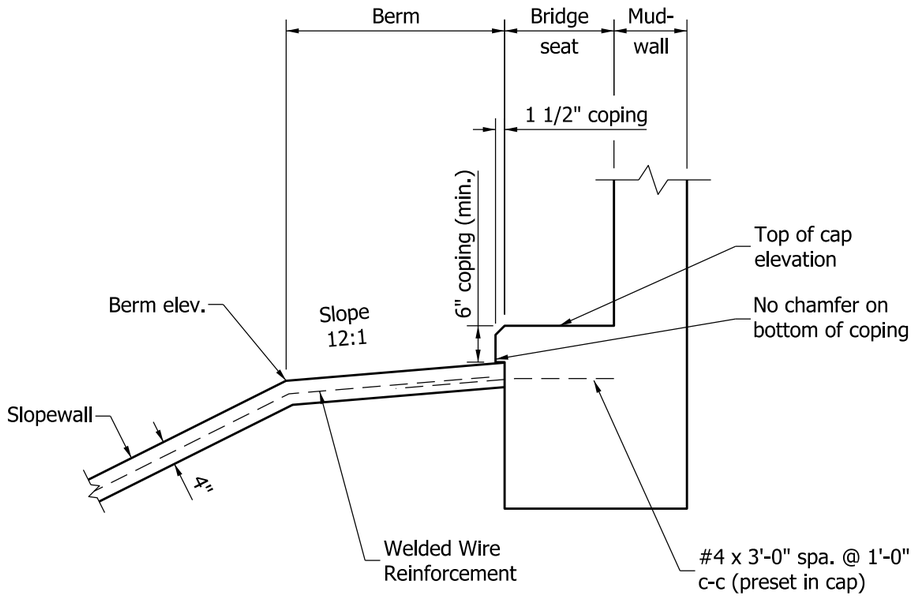

SECTION A-A

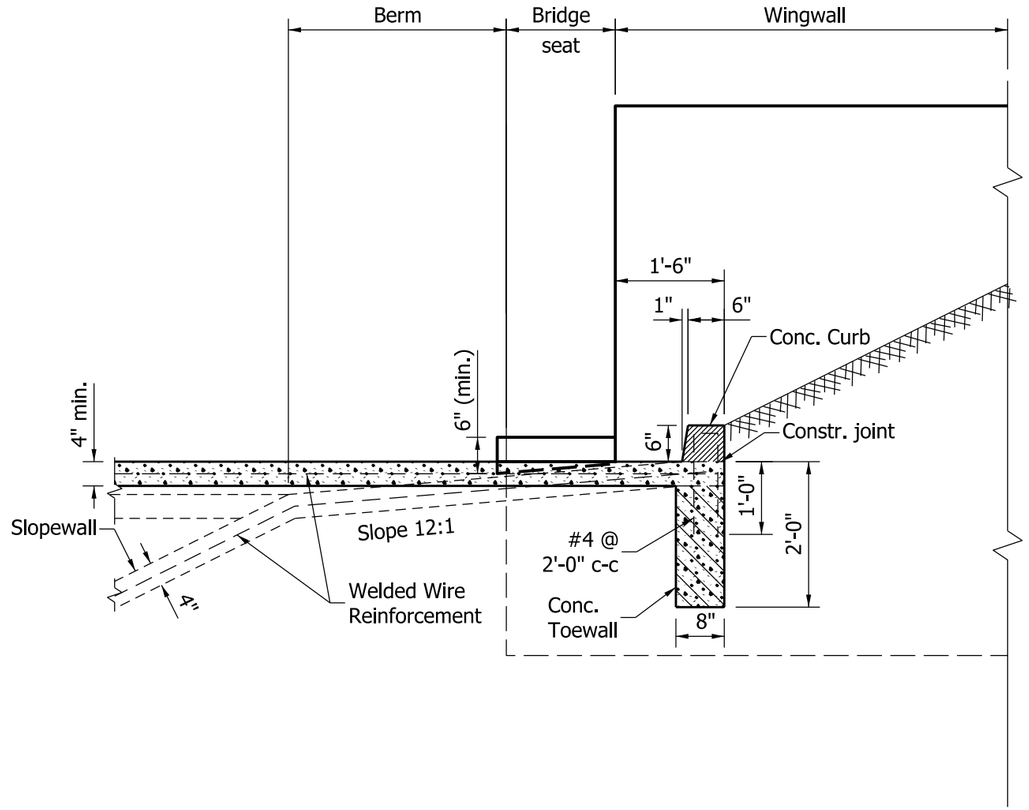

SECTION B-B

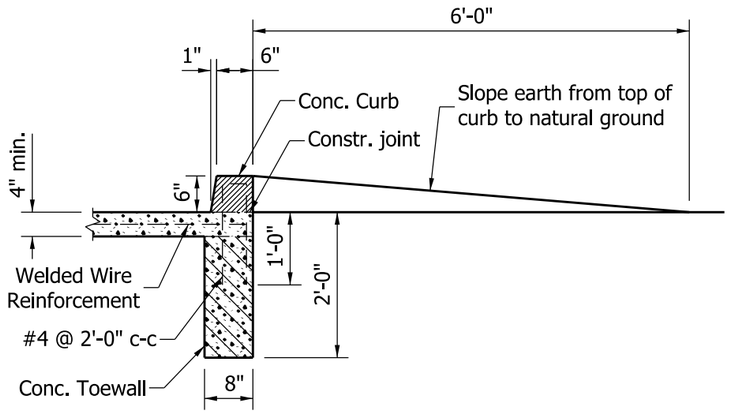

SECTION C-C

INDIANA DEPARTMENT OF TRANSPORTATION

CONCRETE SLOPEWALL DETAILS

SEPTEMBER 2011

STANDARD DRAWING NO. E 616-SWCO-03

RICHARD L. VanCLEAVE REGISTERED No. 9750 STATE OF INDIANA PROFESSIONAL ENGINEER

DESIGN STANDARDS ENGINEER

/s/ Richard L. VanCleave *09/01/11*

DESIGN STANDARDS ENGINEER — DATE

/s/ Mark A. Miller *09/01/11*

CHIEF HIGHWAY ENGINEER — DATE

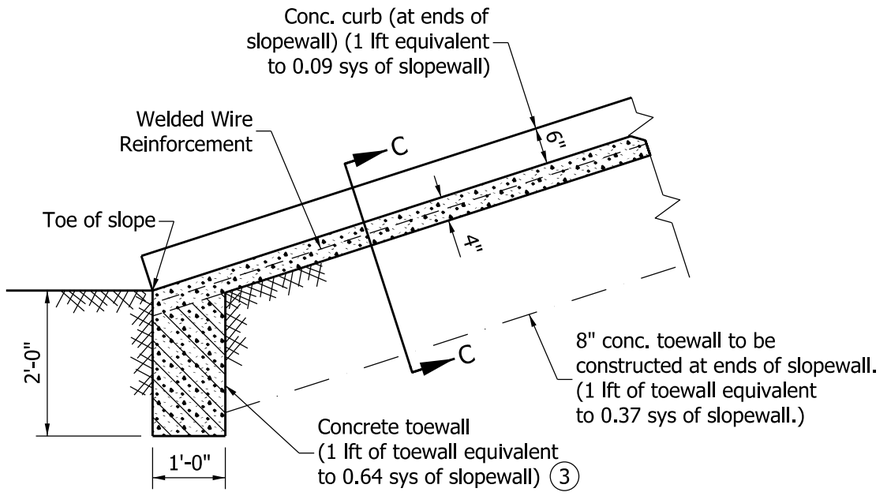

SECTION THROUGH CONCRETE SLOPEWALL

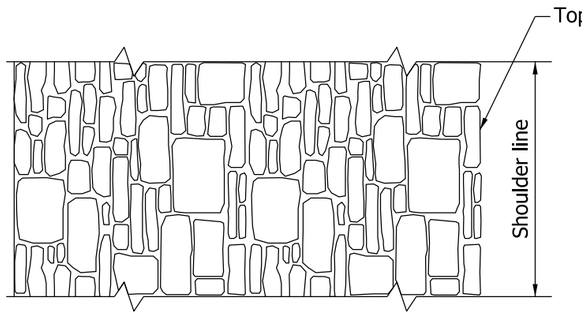

PLAN

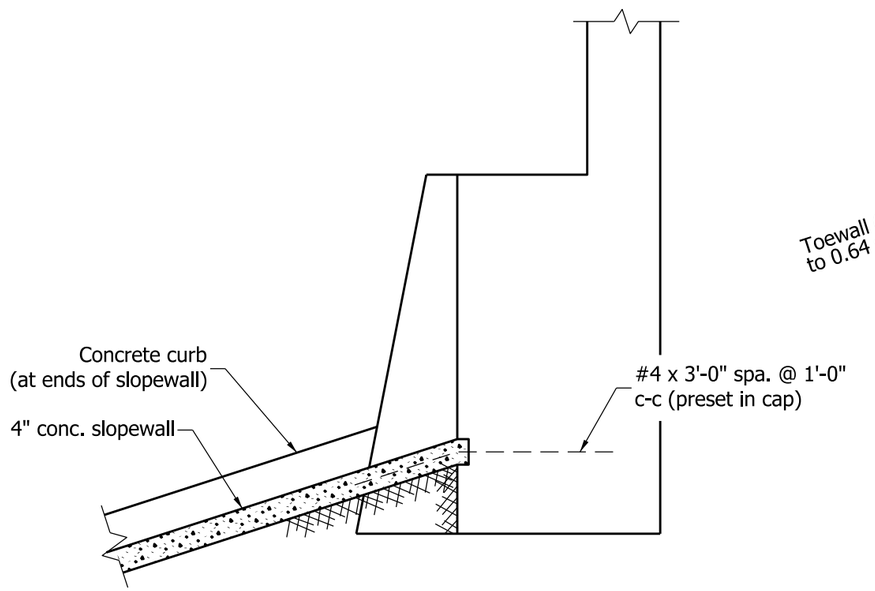

TYPICAL SECTION THROUGH SLOPEWALL AT STRUCTURES WITHOUT BERMS

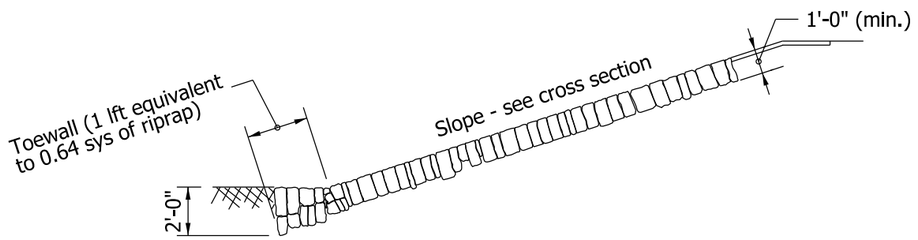

SECTION THROUGH HAND-LAID RIPRAP

NOTES:

1. See Section F-F on Standard Drawing E 616-SWCO-03 for Section C-C.
2. Where hand-laid riprap is used under a structure, a drainage configuration similar to that shown for precast concrete riprap shall be used. See Standard Drawing E 616-SWRR-02 for such configuration.

(3) Toewall is not required adjacent to a pier or bent.

INDIANA DEPARTMENT OF TRANSPORTATION

CONCRETE AND RIPRAP SLOPEWALL DETAILS

SEPTEMBER 2011

STANDARD DRAWING NO. E 616-SWCO-04

RICHARD L. VanCLEAVE REGISTERED No. 9750 STATE OF INDIANA PROFESSIONAL ENGINEER

DESIGN STANDARDS ENGINEER

/s/ Richard L. VanCleave 09/01/11
DESIGN STANDARDS ENGINEER DATE

/s/ Mark A. Miller 09/01/11
CHIEF HIGHWAY ENGINEER DATE

NOTES:

1. See Standard Drawing E 616-SWCO-06 for Sections A-A, B-B, C-C, D-D, and E-E.
2. See General Plan for stations and locations of inlets and pipe.

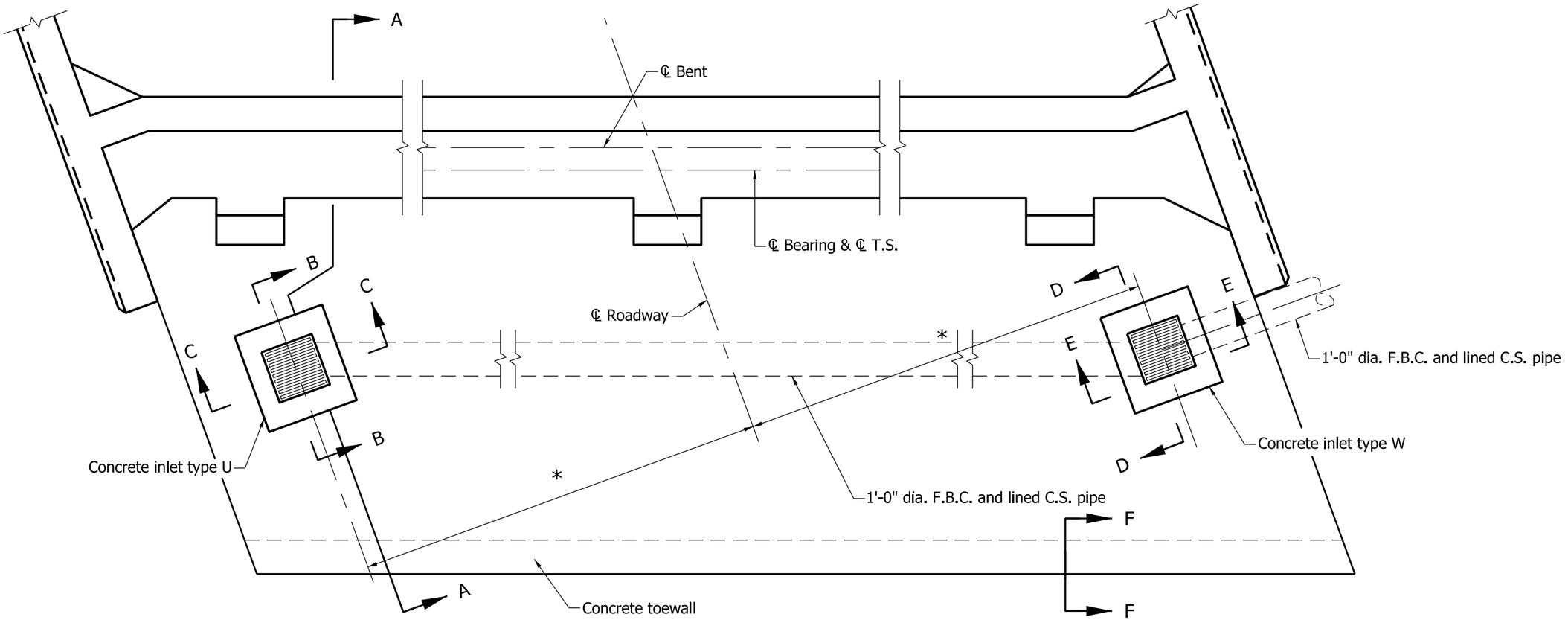

PLAN
(to be used on structures without berms)

* Dimension varies according to roadway width and type of drain used

INDIANA DEPARTMENT OF TRANSPORTATION

SLOPEWALL AND DRAINAGE DETAILS

SEPTEMBER 2011

STANDARD DRAWING NO. E 616-SWCO-05

RICHARD L. VanCLEAVE REGISTERED No. 9750 STATE OF INDIANA PROFESSIONAL ENGINEER

DESIGN STANDARDS ENGINEER

/s/ Richard L. VanCleave 09/01/11
DESIGN STANDARDS ENGINEER DATE

/s/ Mark A. Miller 09/01/11
CHIEF HIGHWAY ENGINEER DATE

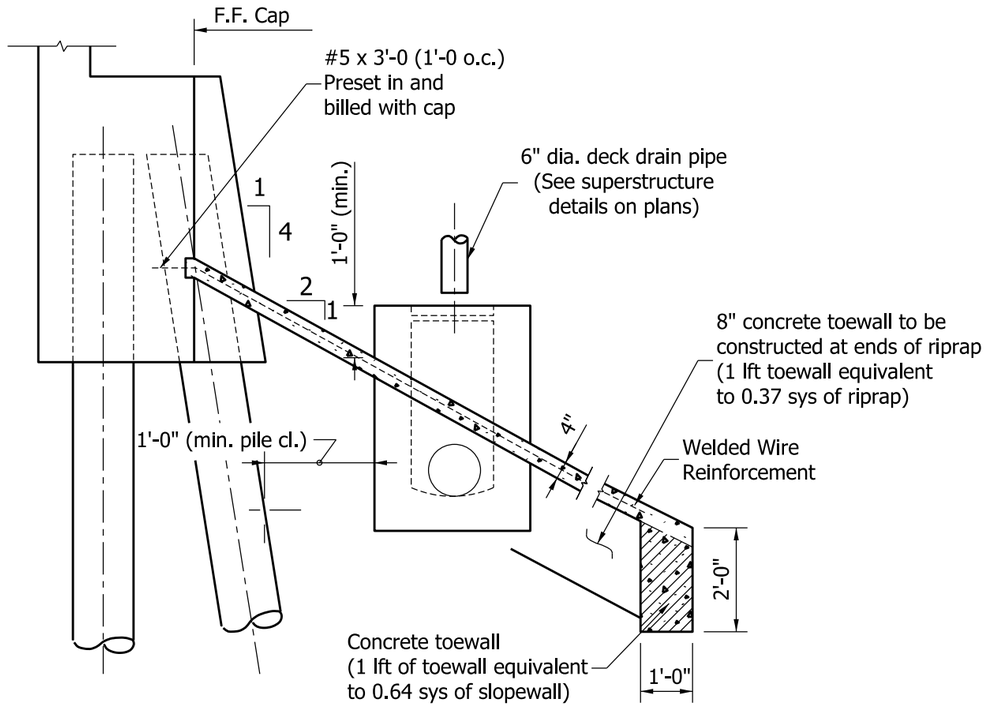

SECTION A-A
TYPICAL ELEVATION THRU SLOPEWALL

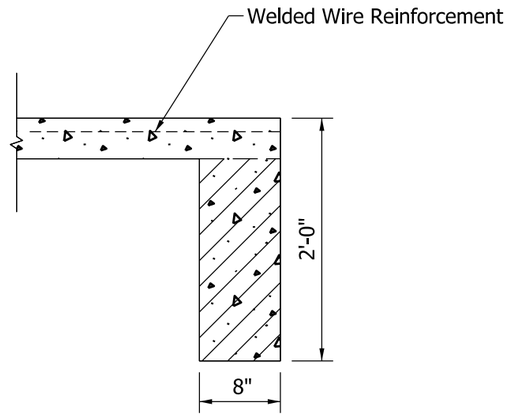

SECTION F-F

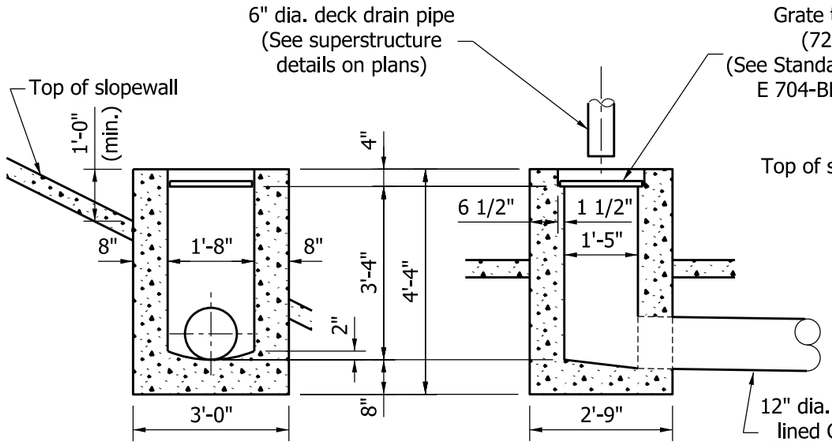

SECTION B-B

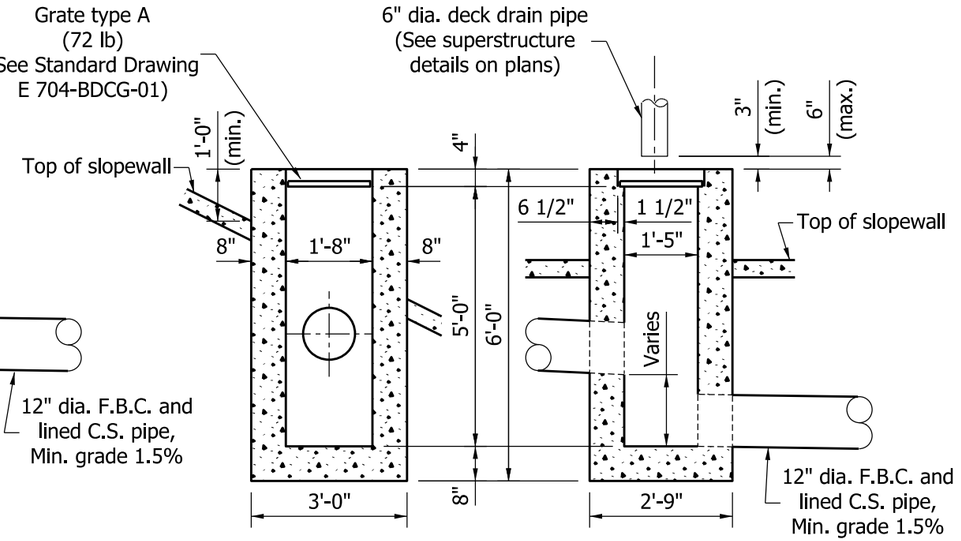

SECTION C-C

DETAIL OF CONCRETE INLET TYPE U

SECTION D-D

SECTION E-E

DETAIL OF CONCRETE INLET TYPE W

INDIANA DEPARTMENT OF TRANSPORTATION

SLOPEWALL AND DRAINAGE
DETAILS

SEPTEMBER 2011

STANDARD DRAWING NO. E 616-SWCO-06

RICHARD L. VanCLEAVE
REGISTERED
No. 9750
STATE OF INDIANA
PROFESSIONAL ENGINEER

DESIGN STANDARDS ENGINEER

/s/ Richard L. VanCleave 09/01/11
DESIGN STANDARDS ENGINEER DATE

/s/ Mark A. Miller 09/01/11
CHIEF HIGHWAY ENGINEER DATE

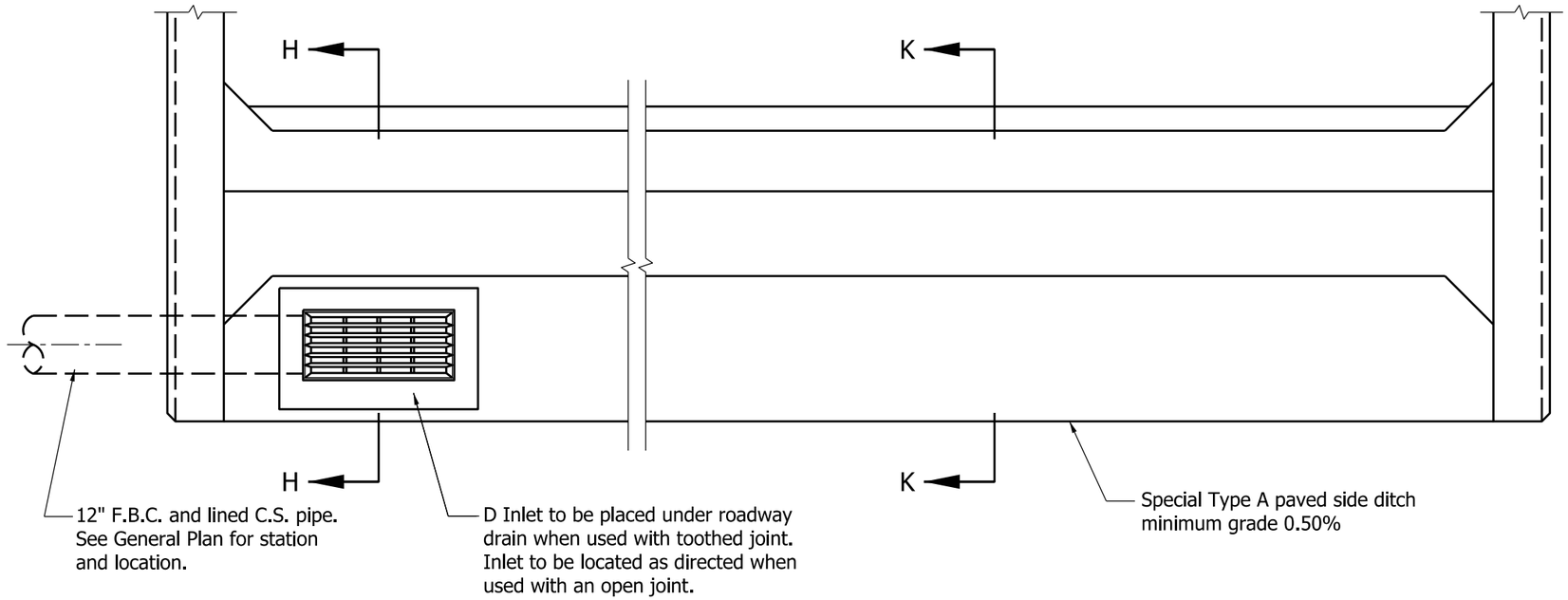

PLAN
(to be used on structures with berms)

NOTES:

1. Precast concrete riprap may be used as an alternate to concrete slopewall only on a structure having a berm adjacent to a cap.

(2) For appropriate casting, see Standard Drawing E 720-CDSC-01.

(3) For additional details of type D inlet, see Standard Drawing E 720-INST-03.

4. WWR shall be placed within the middle third of slopewall thickness and shall extend through all construction joints.

(5) WWR 6" x 6", W2.9 x W2.9 at 42 lb/100 sq. ft., or equivalent.

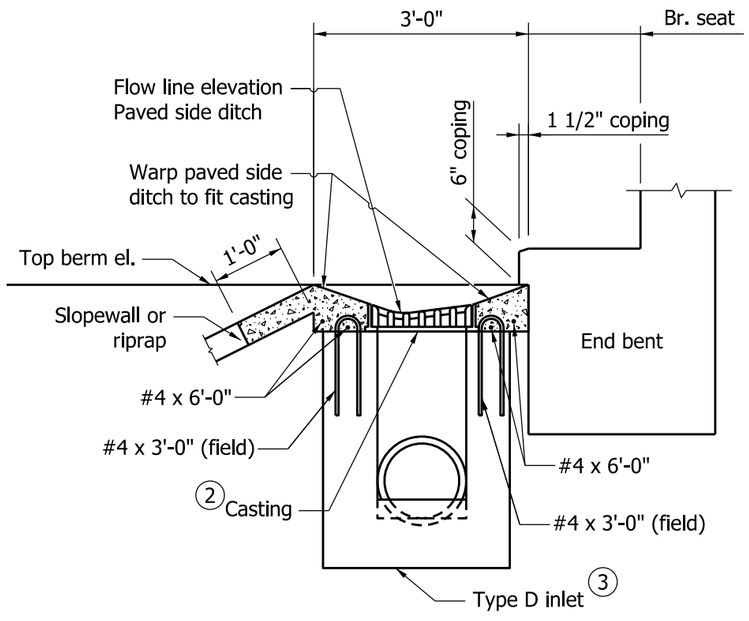

SECTION H-H

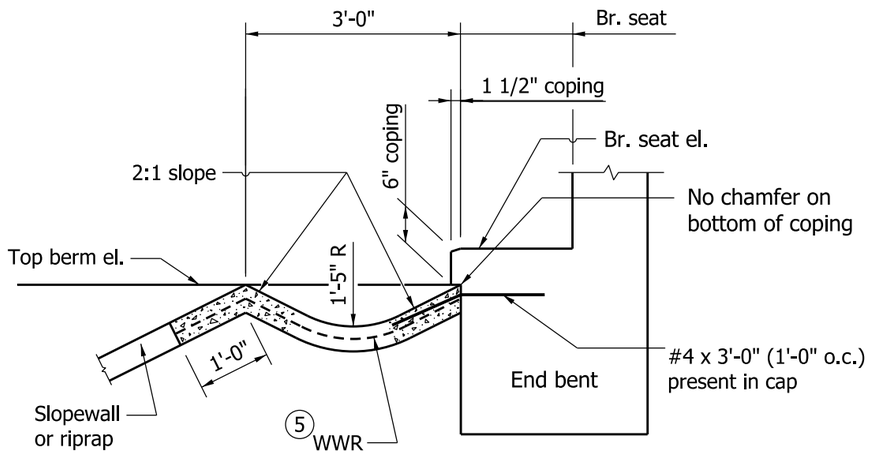

SECTION K-K

INDIANA DEPARTMENT OF TRANSPORTATION

SLOPEWALL AND DRAINAGE DETAILS

SEPTEMBER 2011

STANDARD DRAWING NO. E 616-SWCO-07

RICHARD L. VanCLEAVE
REGISTERED
No. 9750
STATE OF INDIANA
PROFESSIONAL ENGINEER

DESIGN STANDARDS ENGINEER

/s/ Richard L. VanCleave 09/01/11
DESIGN STANDARDS ENGINEER DATE

/s/ Mark A. Miller 09/01/11
CHIEF HIGHWAY ENGINEER DATE

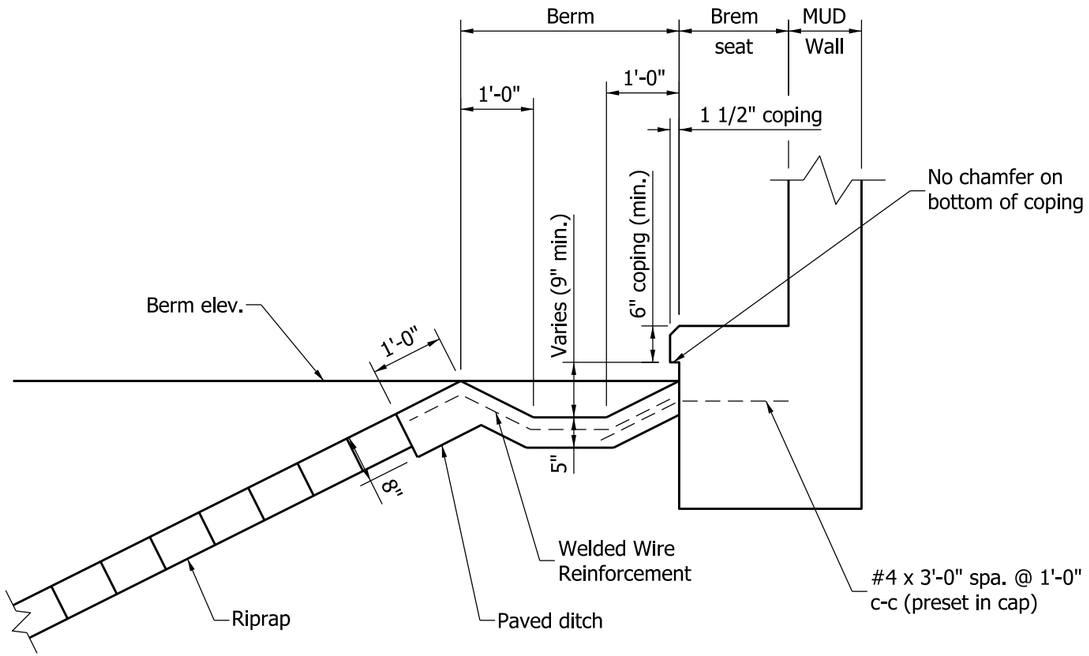

SECTION D-D

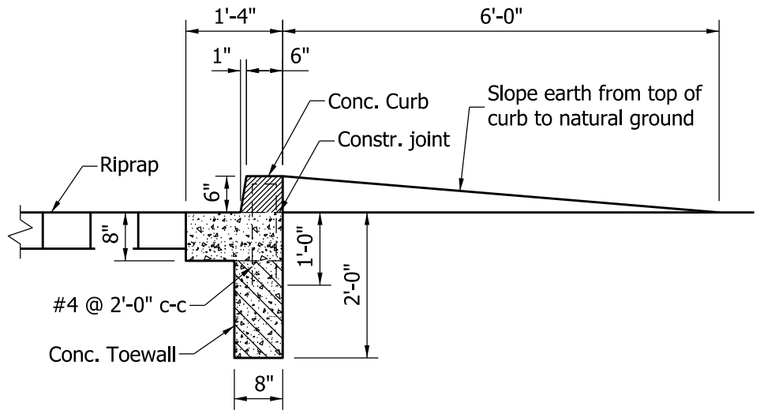

SECTION F-F

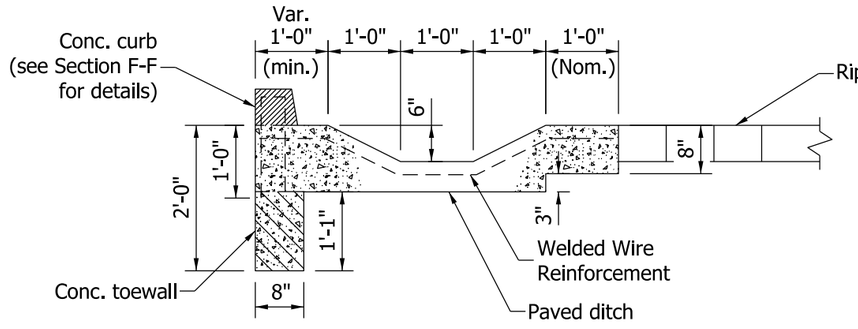

SECTION E-E
Where riprap terminates
2'-0" outside of coping line

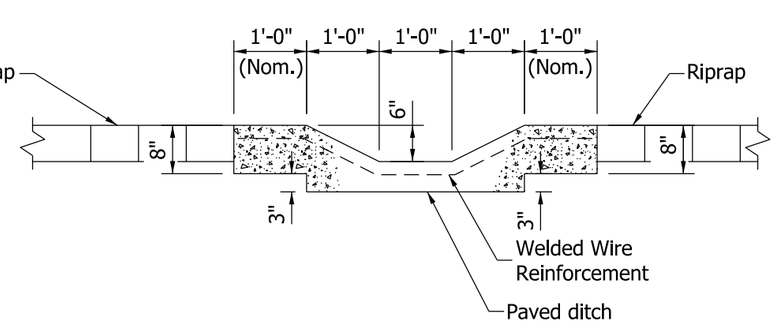

SECTION E-E
Where riprap terminates more
than 2'-0" outside of coping line

INDIANA DEPARTMENT OF TRANSPORTATION

RIPRAP SLOPEWALL DETAILS

SEPTEMBER 2011

STANDARD DRAWING NO. E 616-SWRR-01

RICHARD L. VanCLEAVE REGISTERED No. 9750 STATE OF INDIANA PROFESSIONAL ENGINEER

DESIGN STANDARDS ENGINEER

/s/ Richard L. VanCleave 09/01/11
DESIGN STANDARDS ENGINEER DATE

/s/ Mark A. Miller 09/01/11
CHIEF HIGHWAY ENGINEER DATE

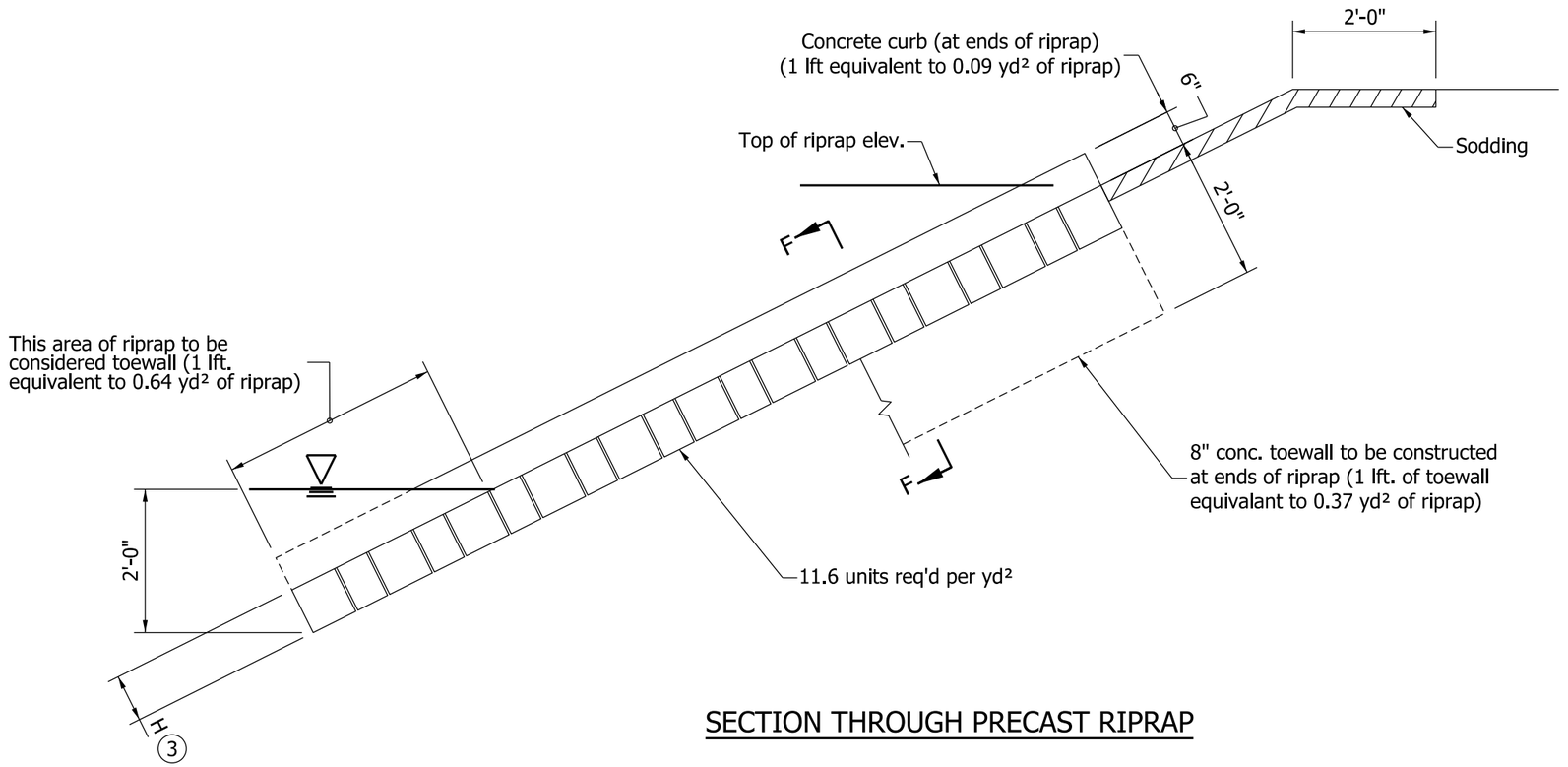

SECTION THROUGH PRECAST RIPRAP

NOTES:

1. See Standard Drawing E 616-SWRR-01 for Section F-F.
2. If riprap is specified, 1'-0" hand-laid riprap or precast concrete riprap type A may be used.

(3) Precast concrete riprap:
Type A: H = 7 5/8" (8" nom.)
Type B: H = 3 5/8" (4" nom.)

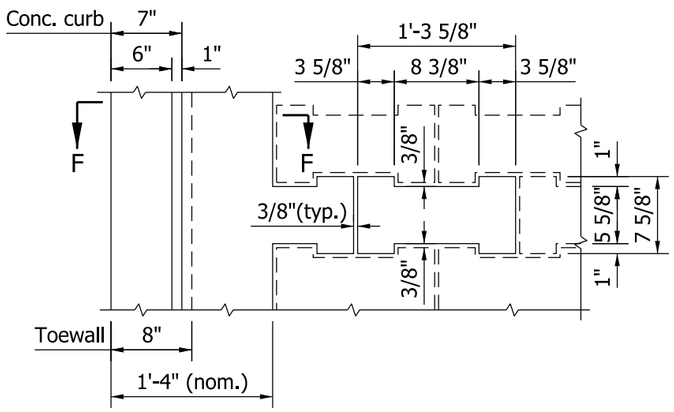

PLAN - PRECAST CONCRETE RIPRAP
(Type A shown)

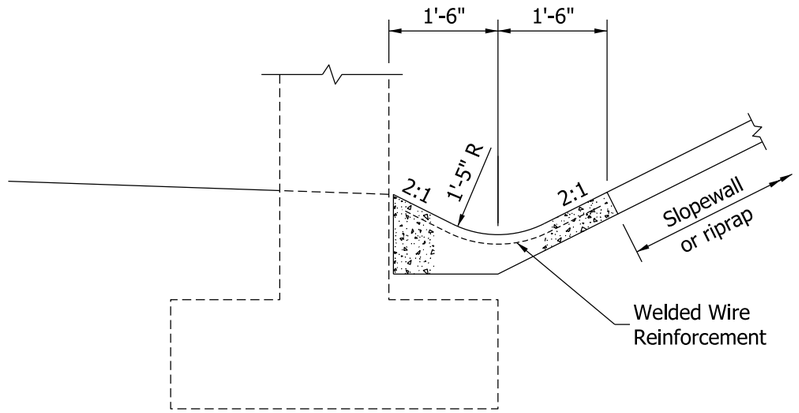

SECTION THROUGH PAVED DITCH AT TOE OF SLOPE
(See layout on plans for location of paved ditch)

INDIANA DEPARTMENT OF TRANSPORTATION

RIPRAP SLOPEWALL DETAILS

SEPTEMBER 2011

STANDARD DRAWING NO. E 616-SWRR-02

RICHARD L. VanCLEAVE REGISTERED No. 9750 STATE OF INDIANA PROFESSIONAL ENGINEER

DESIGN STANDARDS ENGINEER

/s/ Richard L. VanCleave 09/01/11
DESIGN STANDARDS ENGINEER DATE

/s/ Mark A. Miller 09/01/11
CHIEF HIGHWAY ENGINEER DATE

GENERAL NOTES:

1. See Standard Drawing MS for inlet type N-12 details.
2. Contours and top of weir elevation shown in Section A-A are in feet relative to the ditch grade.
3. The type N-12 inlet may be placed at the cross pipe structure to eliminate the longitudinal pipe which connects the inlet to the cross pipe.

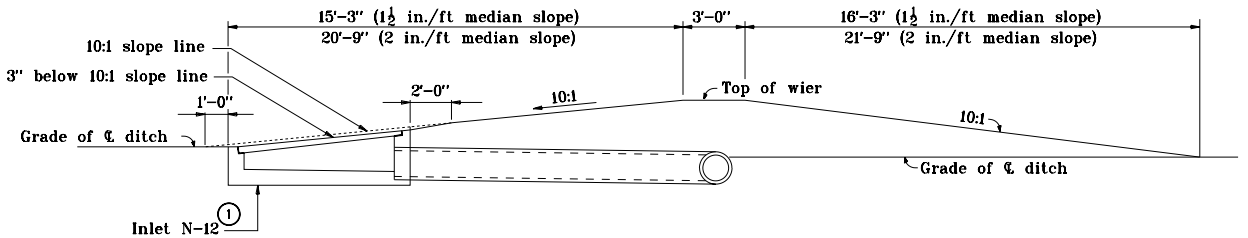

SECTION A-A

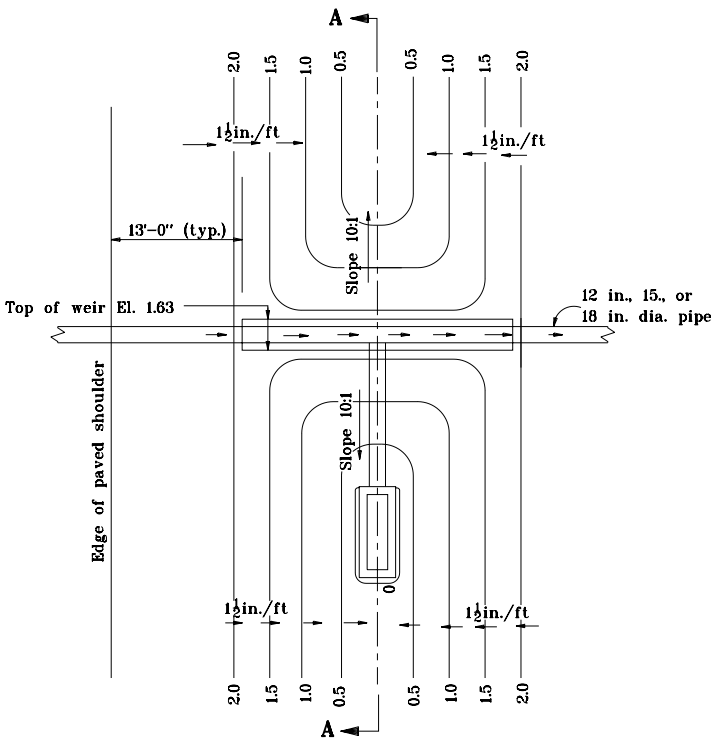

PLAN

1½ in./ft MEDIAN SLOPE

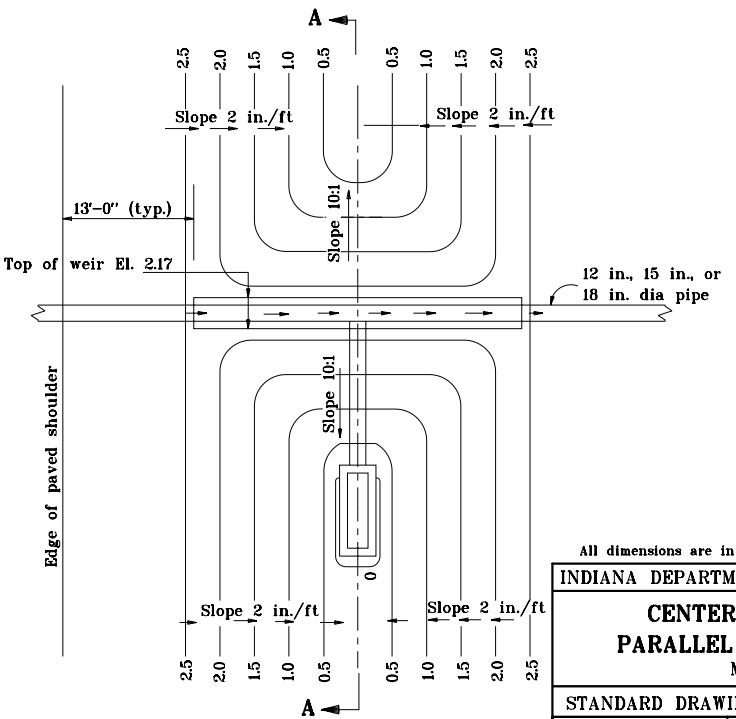

PLAN

2 in./ft MEDIAN SLOPE

All dimensions are in mm unless otherwise specified.

INDIANA DEPARTMENT OF TRANSPORTATION

CENTER DITCH INLET PARALLEL TO ℄ ROADWAY

MAY 1998

STANDARD DRAWING NO. **E 617-CDIN-01**

Source Sheet: MS1

ANTHONY L. UREMOVICH REGISTERED No. 18095 STATE OF INDIANA PROFESSIONAL ENGINEER

DESIGN STANDARDS ENGINEER

/s/ Anthony L. Uremovich 5-01-98
DESIGN STANDARDS ENGINEER — DATE

/s/ Donald W. Lucas 5-01-98
CHIEF HIGHWAY ENGINEER — DATE

GENERAL NOTES

(1) See Standard Drawing MS for inlet type N–12 details.

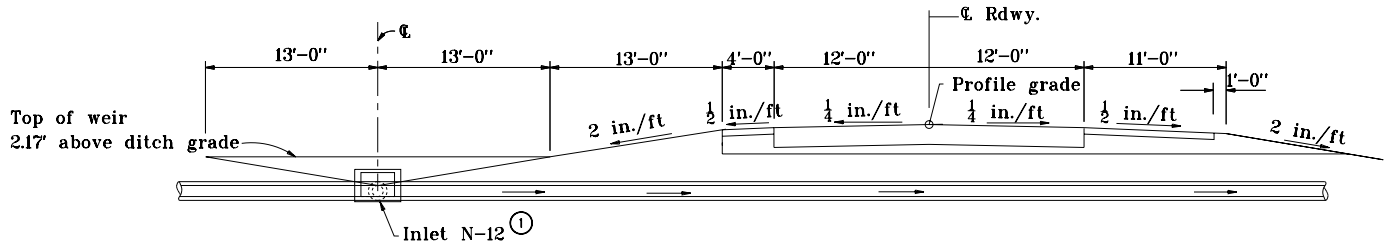

USE WITH MEDIAN SLOPE OF 2 in./ft

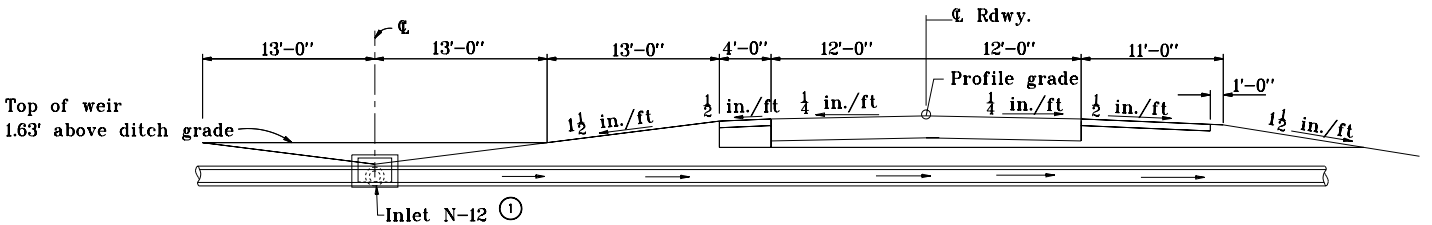

USE WITH MEDIAN SLOPE OF 1½ in./ft

All dimensions are in mm unless otherwise specified.

INDIANA DEPARTMENT OF TRANSPORTATION

CENTER DITCH INLET PARALLEL TO ℄ ROADWAY

MAY 1998

STANDARD DRAWING NO. **E 617–CDIN–02**

ANTHONY L. UREMOVICH REGISTERED No. 18095 STATE OF INDIANA PROFESSIONAL ENGINEER

DESIGN STANDARDS ENGINEER

/s/ Anthony L. Uremovich 5–01–98
DESIGN STANDARDS ENGINEER DATE

/s/ Donald W. Lucas 5–01–98
CHIEF HIGHWAY ENGINEER DATE

Source Sheet: MS1

GENERAL NOTES:

1. See Standard Drawing MS for inlet type P-12 details.
2. Contours and top of weir elevation shown in Section B-B are in feet relative to the ditch grade.

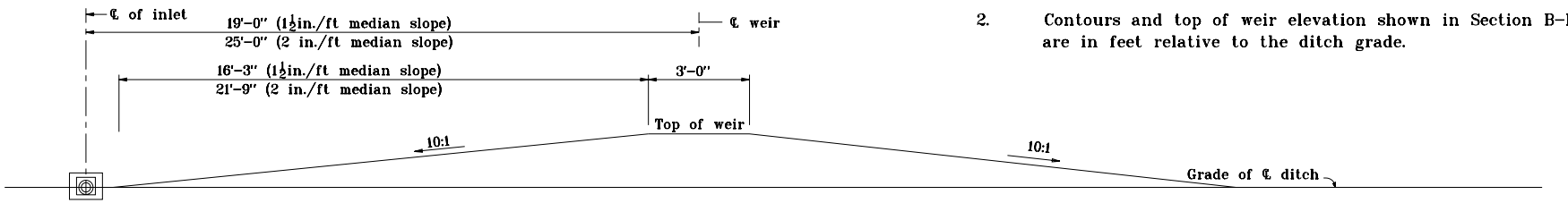

SECTION B-B

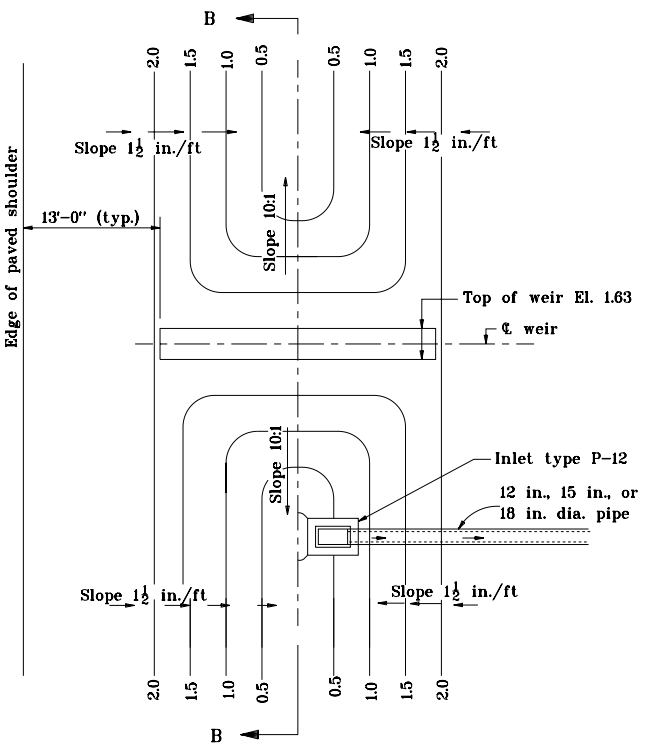

PLAN
1½ in./ft MEDIAN SLOPE

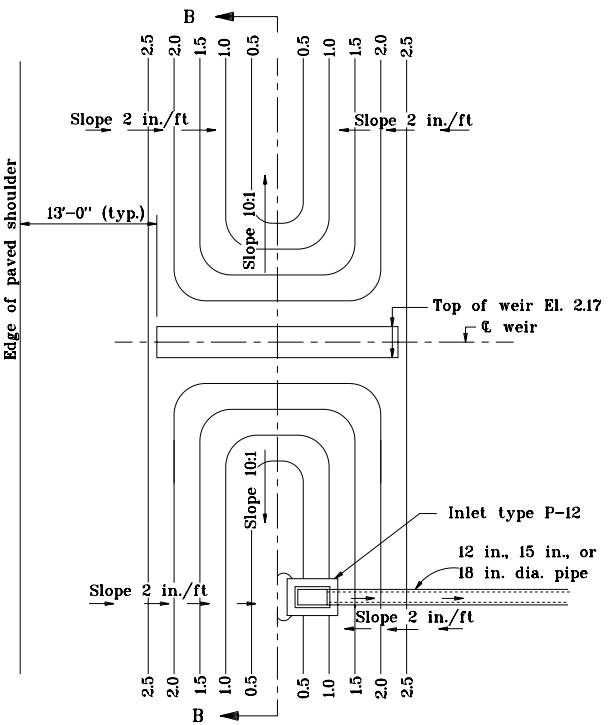

PLAN
2 in./ft MEDIAN SLOPE

All dimensions are in mm unless otherwise specified.

INDIANA DEPARTMENT OF TRANSPORTATION

CENTER DITCH INLET PERPENDICULAR TO ℄ ROADWAY

MAY 1998

STANDARD DRAWING NO. **E 617-CDIN-03**

ANTHONY L. UREMOVICH REGISTERED No. 18095 STATE OF INDIANA PROFESSIONAL ENGINEER

DESIGN STANDARDS ENGINEER

/s/ Anthony L. Uremovich 5-01-98
DESIGN STANDARDS ENGINEER — DATE

/s/ Donald W. Lucas 5-01-98
CHIEF HIGHWAY ENGINEER — DATE

Source Sheet: MS1

GENERAL NOTES

(1) See Standard drawing MS for inlet type P-12 details.

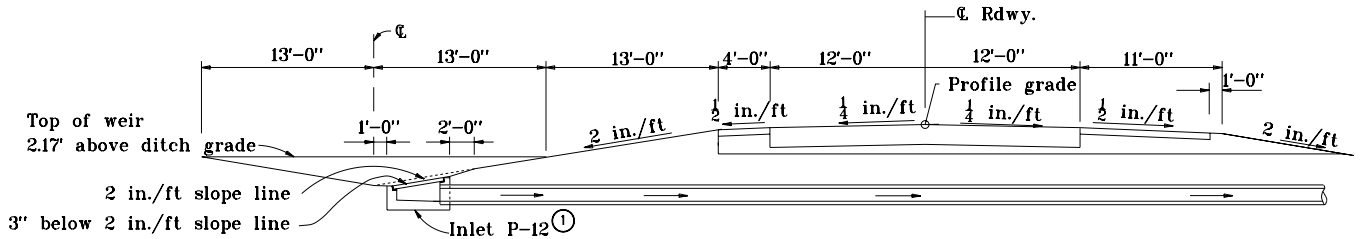

USE WITH MEDIAN SLOPE OF 2 in./ft

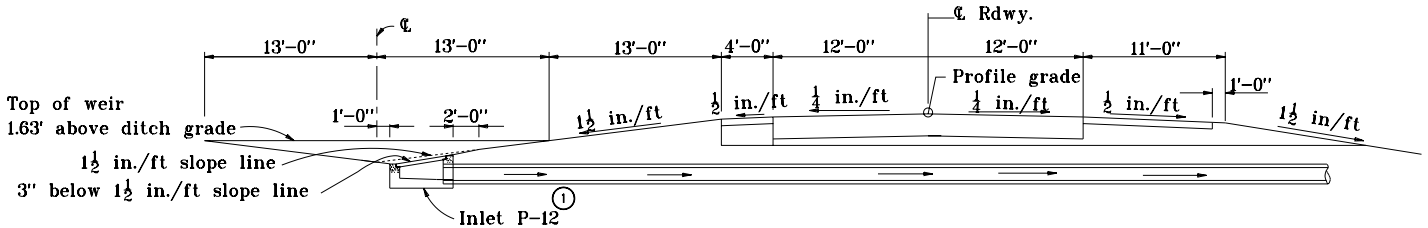

USE WITH MEDIAN SLOPE OF 1½ in./ft

All dimensions are in mm unless otherwise specified.

INDIANA DEPARTMENT OF TRANSPORTATION

CENTER DITCH INLET PERPENDICULAR TO ℄ ROADWAY

MAY 1998

STANDARD DRAWING NO. **E 617-CDIN-04**

ANTHONY L. UREMOVICH REGISTERED No. 18095 STATE OF INDIANA PROFESSIONAL ENGINEER

DESIGN STANDARDS ENGINEER

/s/ Anthony L. Uremovich 5-01-98
DESIGN STANDARDS ENGINEER DATE

/s/ Donald W. Lucas 5-01-98
CHIEF HIGHWAY ENGINEER DATE

Source Sheet: MS1

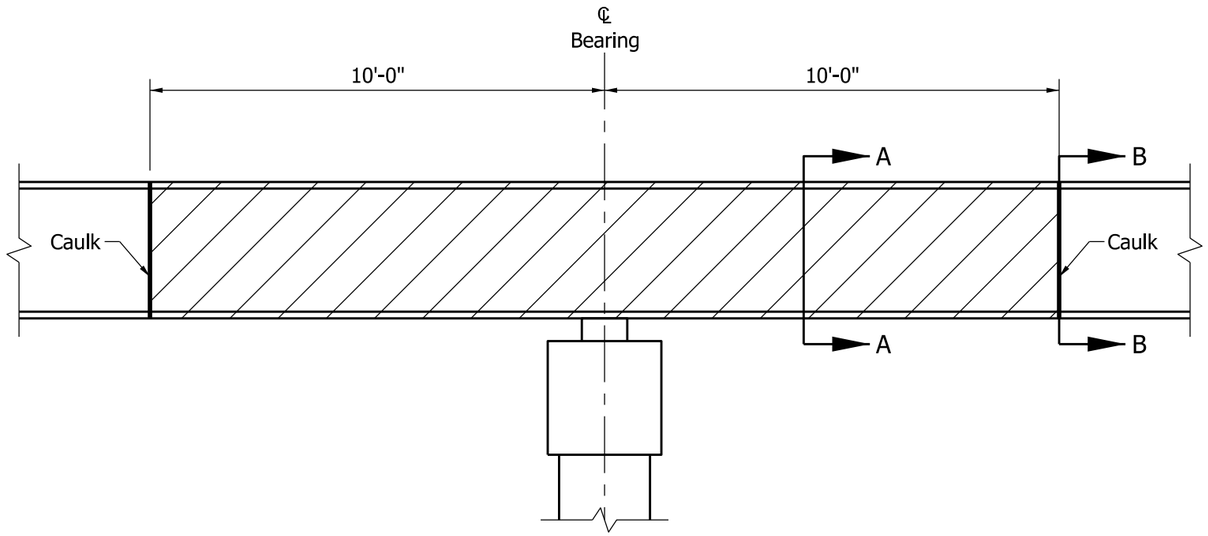

BEAM OR GIRDER AT INTERIOR SUPPORT

ELEVATION VIEW
(Bridge Deck not shown for clarity)

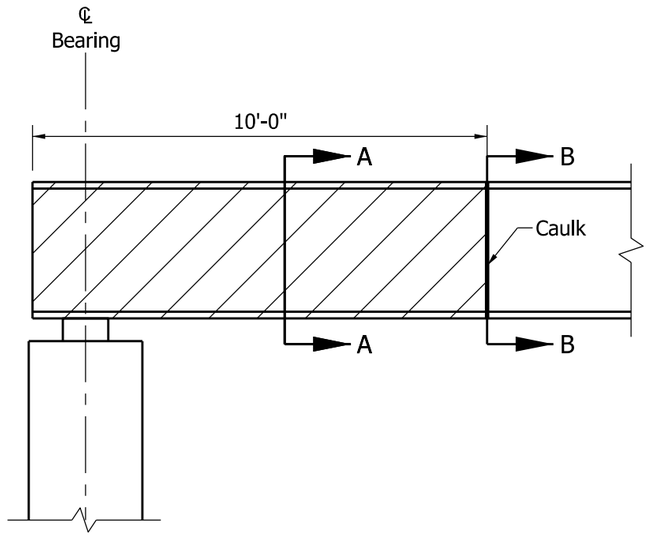

BEAM OR GIRDER AT END-BENT SUPPORT

ELEVATION VIEW
(Bridge Deck, Mudwall, and Concrete Encasement not shown for clarity)

NOTE:

1. Caulk shall be placed on the painted surface at the painted/unpainted interface and is intended to function as a drip bead.

LEGEND:

= Area to be painted

= Caulk Bead

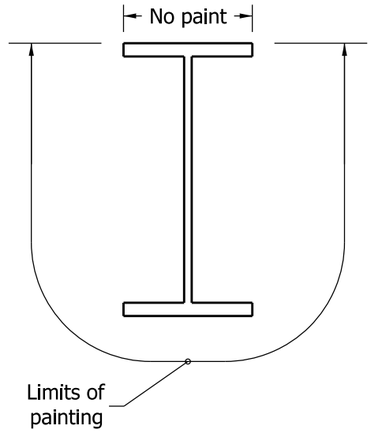

SECTION A-A

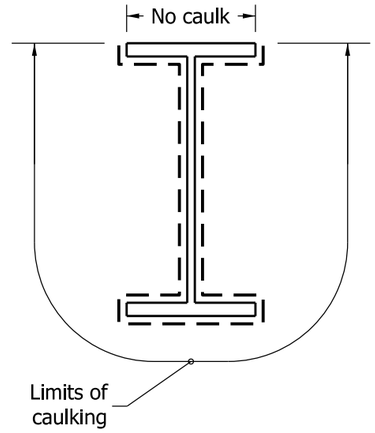

SECTION B-B

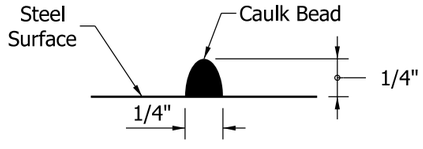

CAULK BEAD DETAIL

INDIANA DEPARTMENT OF TRANSPORTATION

PAINTING REQUIREMENTS
FOR WEATHERING STEEL

SEPTEMBER 2011

STANDARD DRAWING NO. E 619-PRWS-01

RICHARD L. VanCLEAVE REGISTERED No. 9750 STATE OF INDIANA PROFESSIONAL ENGINEER

DESIGN STANDARDS ENGINEER

/s/ Richard L. VanCleave 09/01/11
DESIGN STANDARDS ENGINEER DATE

/s/ Mark A. Miller 09/01/11
CHIEF HIGHWAY ENGINEER DATE

GENERAL NOTES

1. Tie wire securement points on tree shall be above the first or second main branch.

(2) See Standard Drawing E 622-LSPL-04 for for Rubber Hose Detail.

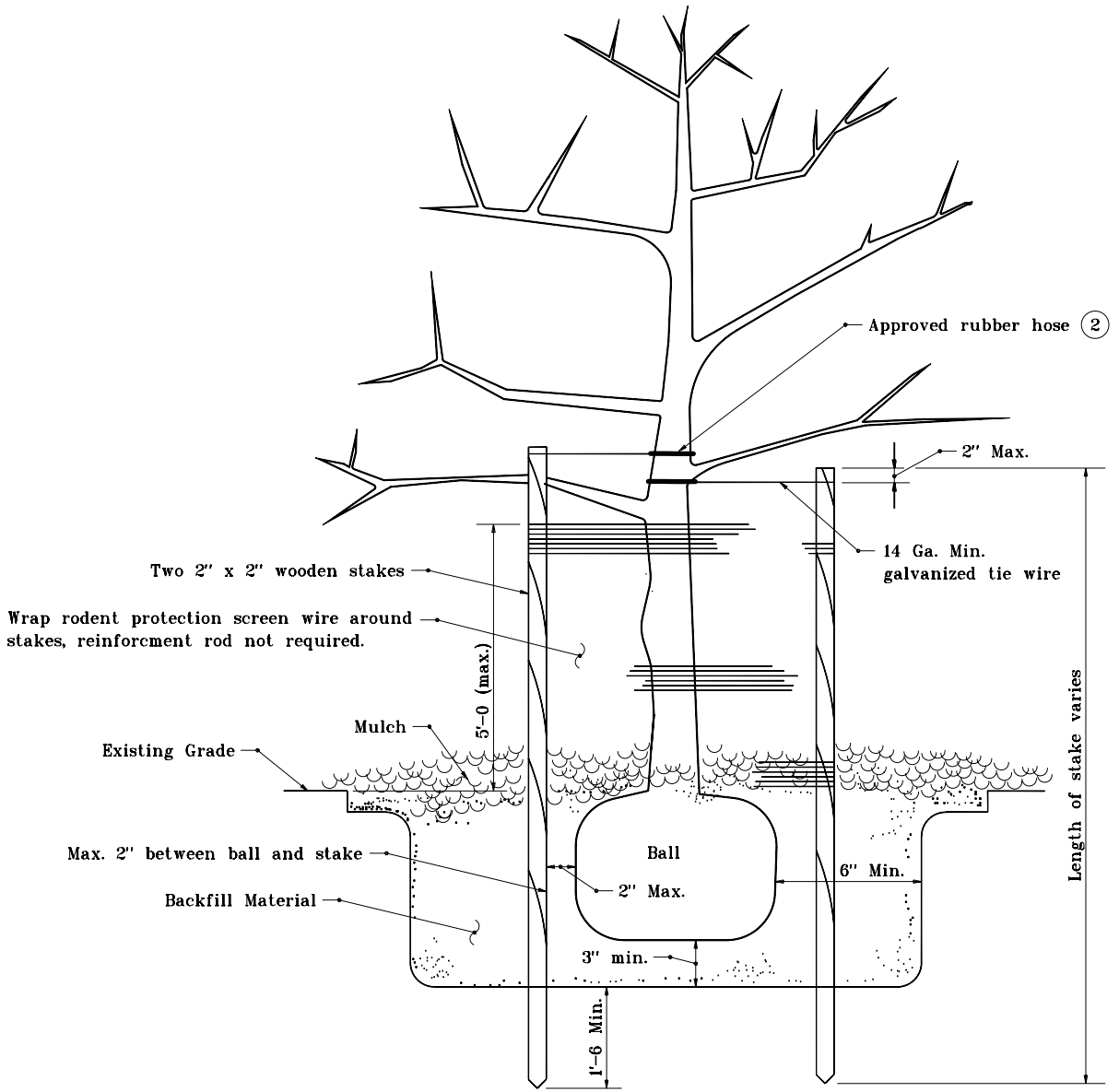

Detail applies to trees
less than $1\frac{1}{4}$" caliper.

INDIANA DEPARTMENT OF TRANSPORTATION

PLANTING BALLED AND BURLAPPED TREE

APRIL 1995

STANDARD DRAWING NO. **E 622-LSPL-01**

ANTHONY L. UREMOVICH REGISTERED No. 18095 STATE OF INDIANA PROFESSIONAL ENGINEER

DESIGN STANDARDS ENGINEER

DETAILS PLACED IN THIS FORMAT	11-15-99
/s/ Anthony L. Uremovich DESIGN STANDARDS ENGINEER	11-15-99 DATE
/s/ Firooz Zandi CHIEF HIGHWAY ENGINEER	11-15-99 DATE
ORIGINALLY APPROVED	4-03-95

GENERAL NOTES

1. This detail applies to Pine Trees (48" and over) with exception that screen wire protection shall not be required.
2. Plastic coil-type protective wrapping is an acceptable alternative to screen wire and reinforcement rod method of tree protection.

(3) See Standard Drawing E 622-LSPL-04 for Rubber Hose Detail.

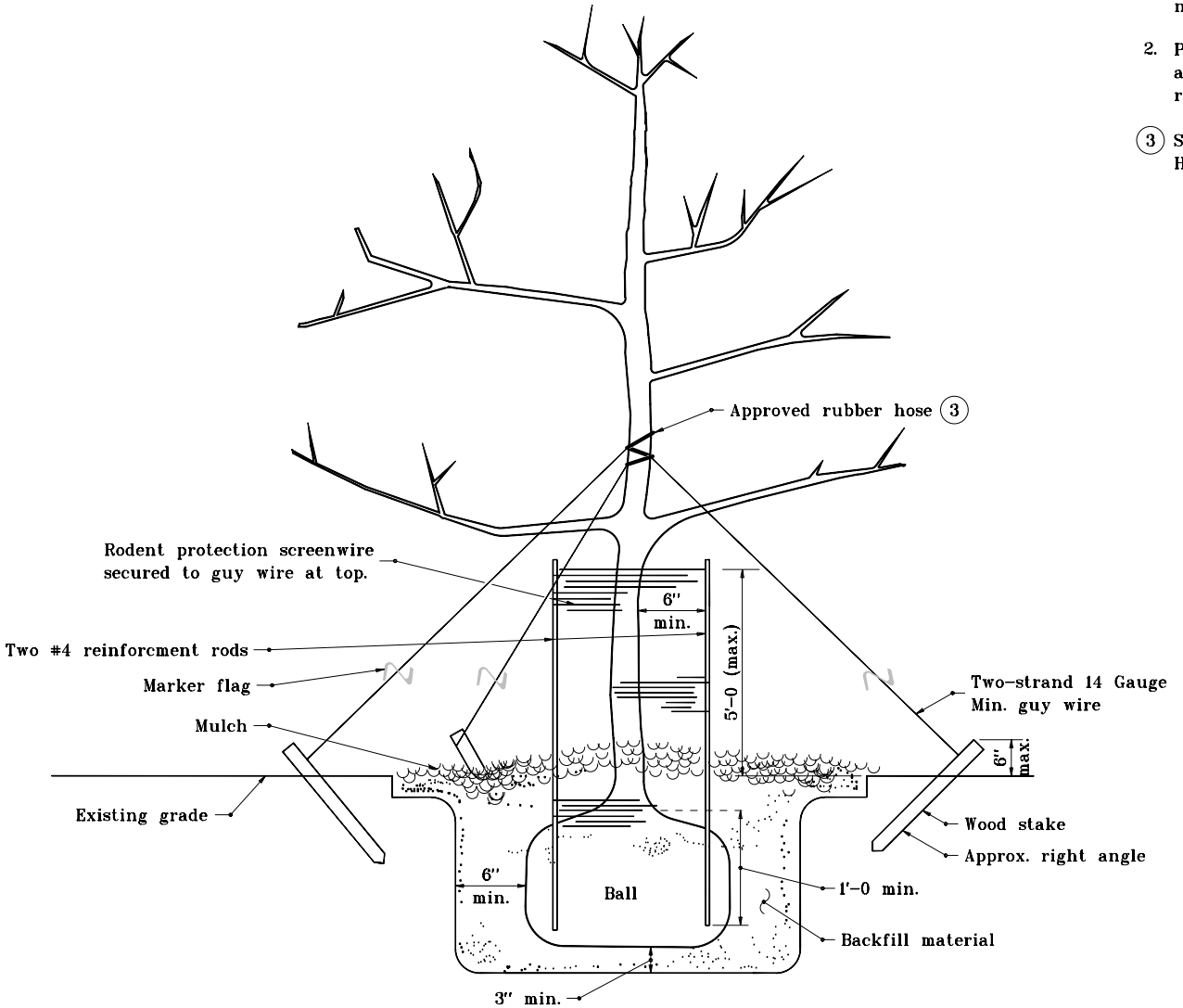

Detail applies to trees
1¼" caliper and greater

INDIANA DEPARTMENT OF TRANSPORTATION

PLANTING BALLED AND BURLAPPED TREE

APRIL 1995

STANDARD DRAWING NO. **E 622-LSPL-02**

ANTHONY L. UREMOVICH REGISTERED No. 18095 STATE OF INDIANA PROFESSIONAL ENGINEER

DESIGN STANDARDS ENGINEER

DETAILS PLACED IN THIS FORMAT	11-15-99
/s/ Anthony L. Uremovich DESIGN STANDARDS ENGINEER	11-15-99 DATE
/s/ Firooz Zandi CHIEF HIGHWAY ENGINEER	11-15-99 DATE
ORIGINALLY APPROVED	4-01-95

GENERAL NOTES

1. This detail applies to trees over 72".

(2) See Standard Drawing E 622-LSPL-04 for Rubber Hose Detail.

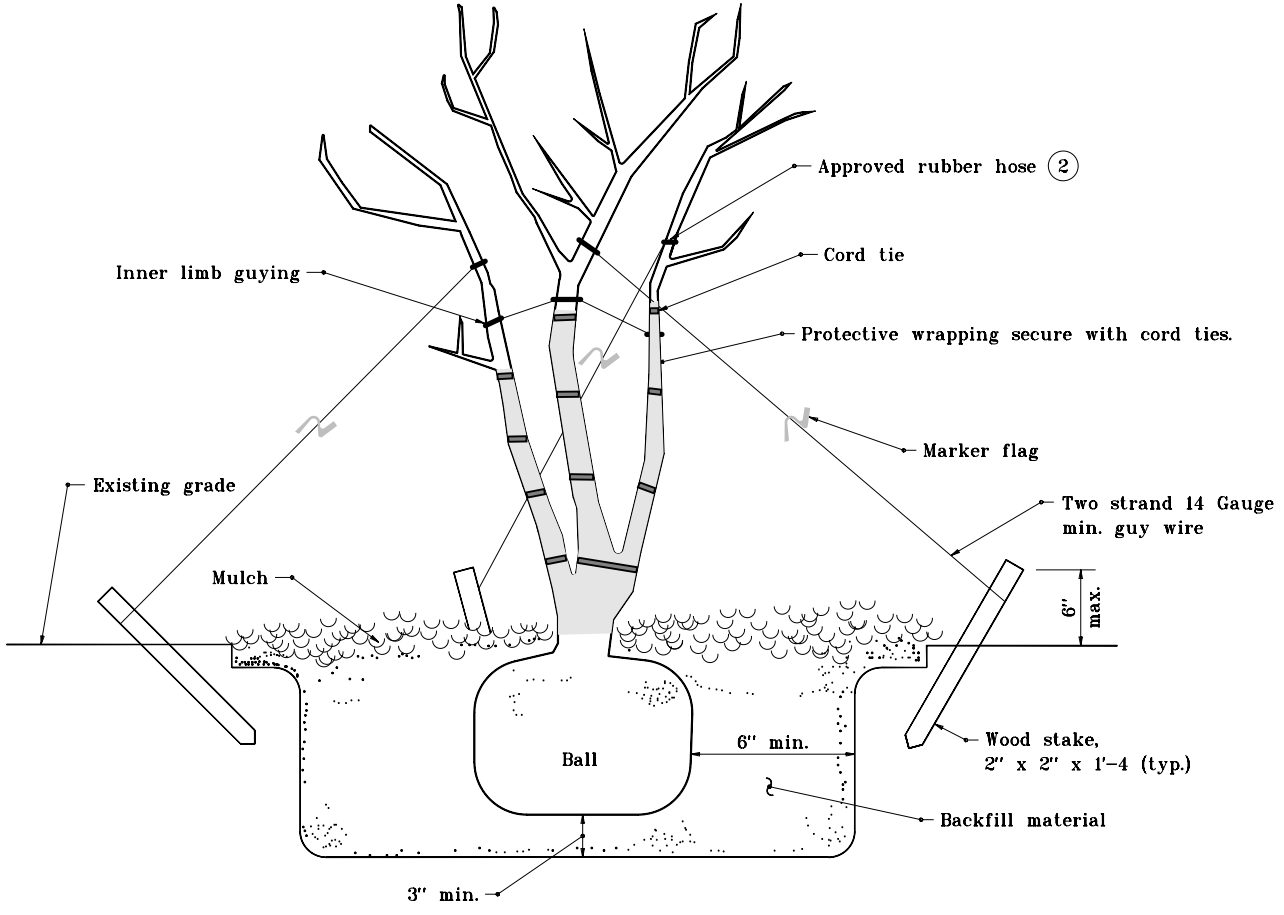

INDIANA DEPARTMENT OF TRANSPORTATION

PLANTING MULTI-STEM TREE

JANUARY 2000

STANDARD DRAWING NO. **E 622-LSPL-03**

ANTHONY L. UREMOVICH REGISTERED No. 18095 STATE OF INDIANA PROFESSIONAL ENGINEER

DESIGN STANDARDS ENGINEER

/s/ Anthony L. Uremovich 4-03-95
DESIGN STANDARDS ENGINEER — DATE

/s/ Donald W. Lucas 4-03-95
CHIEF HIGHWAY ENGINEER — DATE

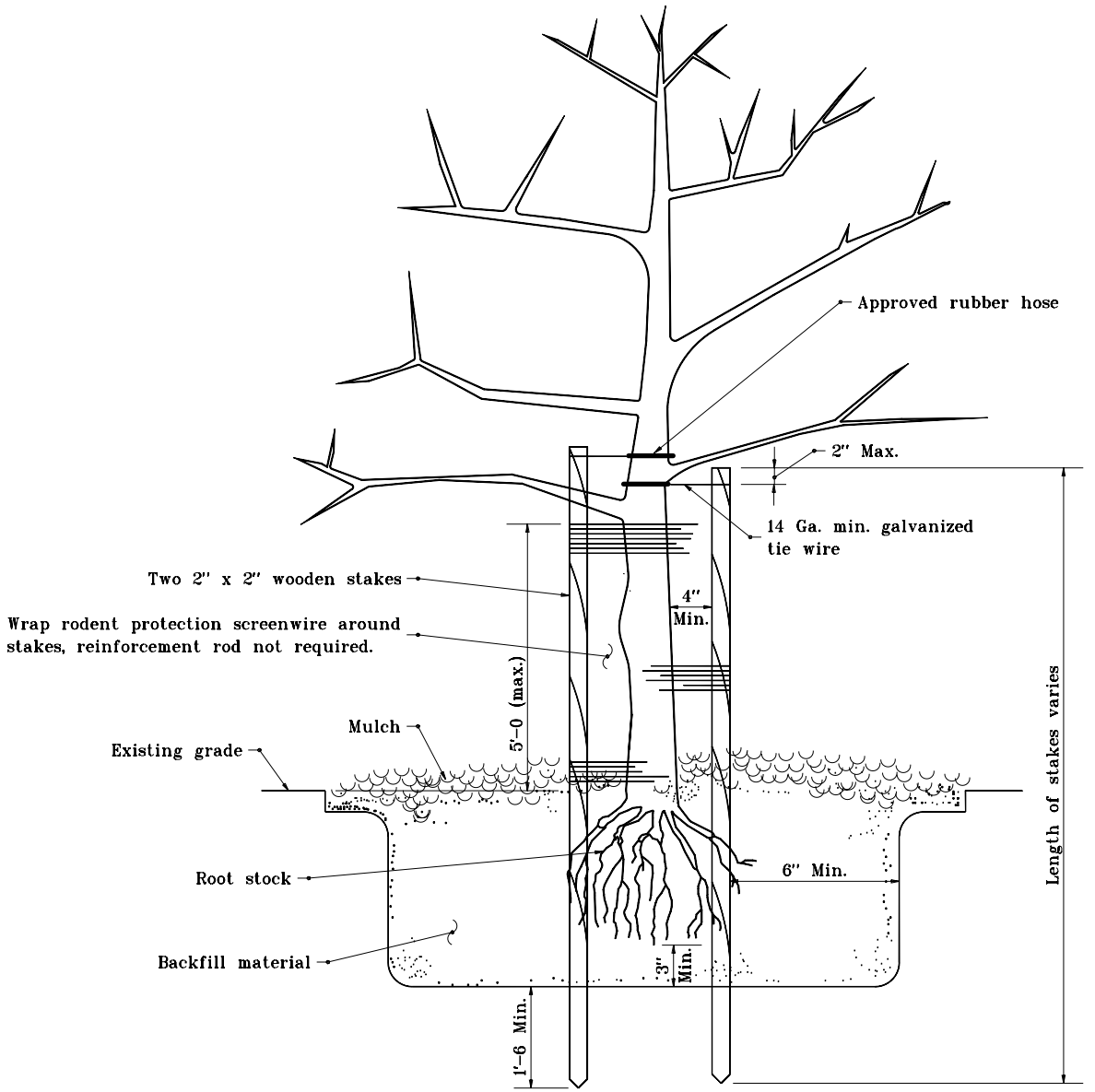

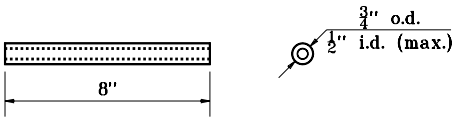

RUBBER HOSE DETAIL

INDIANA DEPARTMENT OF TRANSPORTATION

PLANTING BARE ROOT TREE

APRIL 1995

STANDARD DRAWING NO. **E 622-LSPL-04**

ANTHONY L. UREMOVICH REGISTERED No. 18095 STATE OF INDIANA PROFESSIONAL ENGINEER

DESIGN STANDARDS ENGINEER

DETAILS PLACED IN THIS FORMAT	11-15-99
/s/ Anthony L. Uremovich	11-15-99
DESIGN STANDARDS ENGINEER	DATE
/s/ Firooz Zandi	11-15-99
CHIEF HIGHWAY ENGINEER	DATE
ORIGINALLY APPROVED	4-01-95

GENERAL NOTES

1. This detail to be followed in the planting of grafted bare root stock.

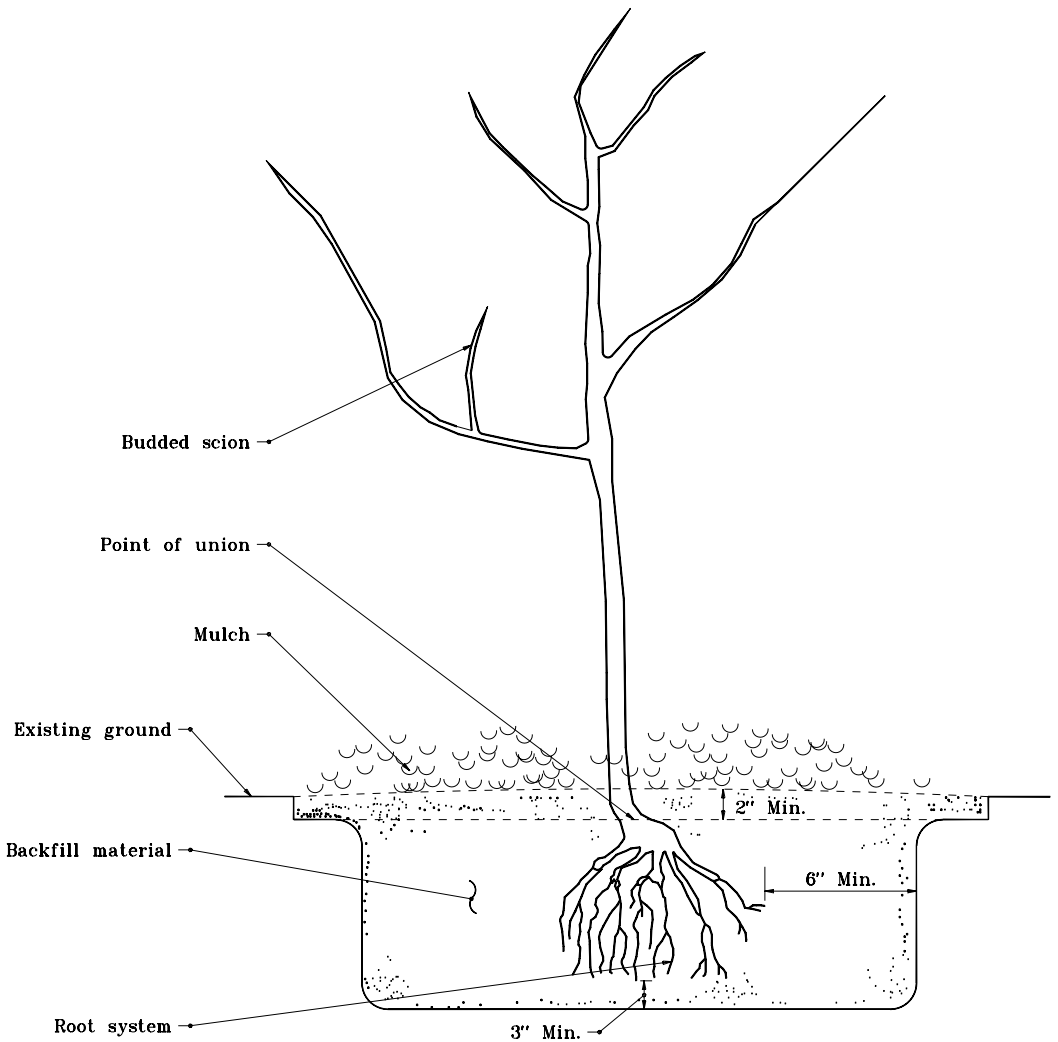

INDIANA DEPARTMENT OF TRANSPORTATION

PLANTING GRAFTED TREE

APRIL 1995

STANDARD DRAWING NO. **E 622-LSPL-05**

ANTHONY L. UREMOVICH REGISTERED No. 18095 STATE OF INDIANA PROFESSIONAL ENGINEER

DESIGN STANDARDS ENGINEER

DETAILS PLACED IN THIS FORMAT 11-15-99

/s/ Anthony L. Uremovich 11-15-99
DESIGN STANDARDS ENGINEER DATE

/s/ Firooz Zandi 11-15-99
CHIEF HIGHWAY ENGINEER DATE

ORIGINALLY APPROVED 4-01-95

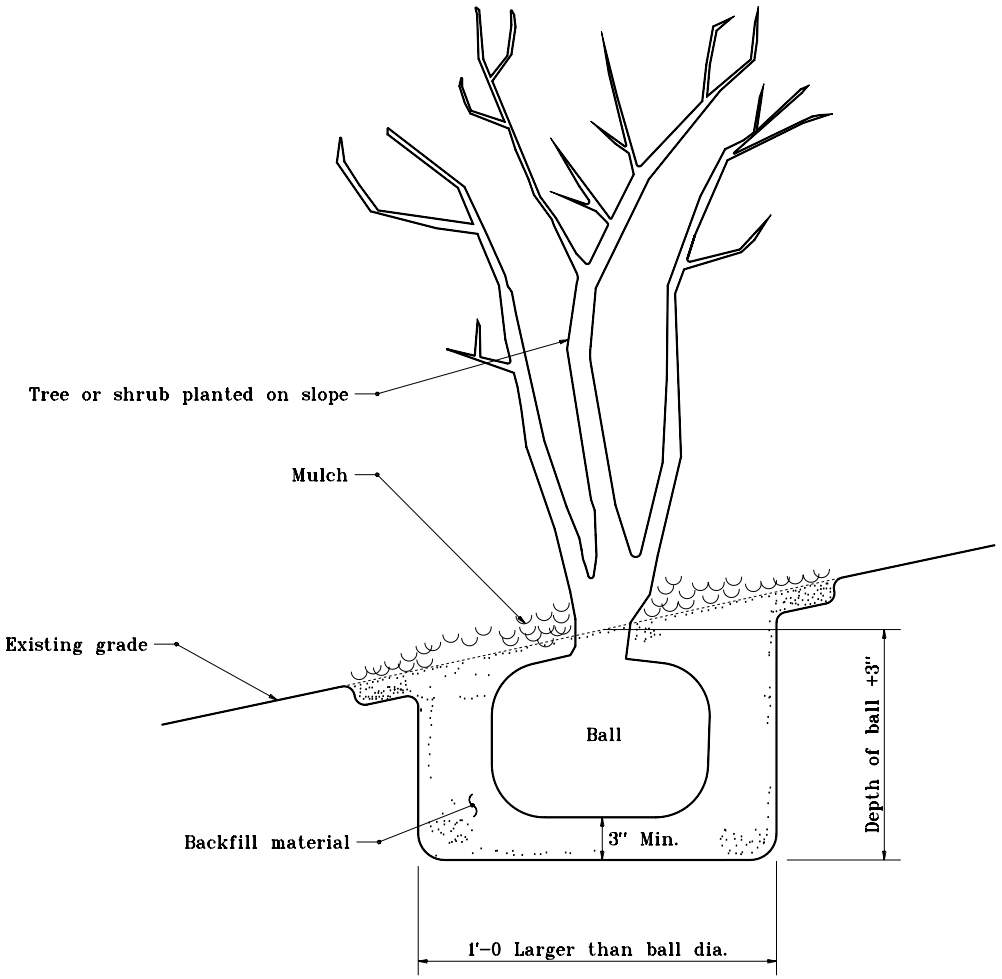

INDIANA DEPARTMENT OF TRANSPORTATION

PLANTING ON SLOPE

APRIL 1995

STANDARD DRAWING NO. **E 622-LSPL-06**

ANTHONY L. UREMOVICH REGISTERED No. 18095 STATE OF INDIANA PROFESSIONAL ENGINEER

DESIGN STANDARDS ENGINEER

DETAILS PLACED IN THIS FORMAT	11-15-99
/s/ Anthony L. Uremovich	11-15-99
DESIGN STANDARDS ENGINEER	DATE
/s/ Firooz Zandi	11-15-99
CHIEF HIGHWAY ENGINEER	DATE
ORIGINALLY APPROVED	4-03-95

GENERAL NOTES

1. Prostrate shrub planted at right angle to slope.

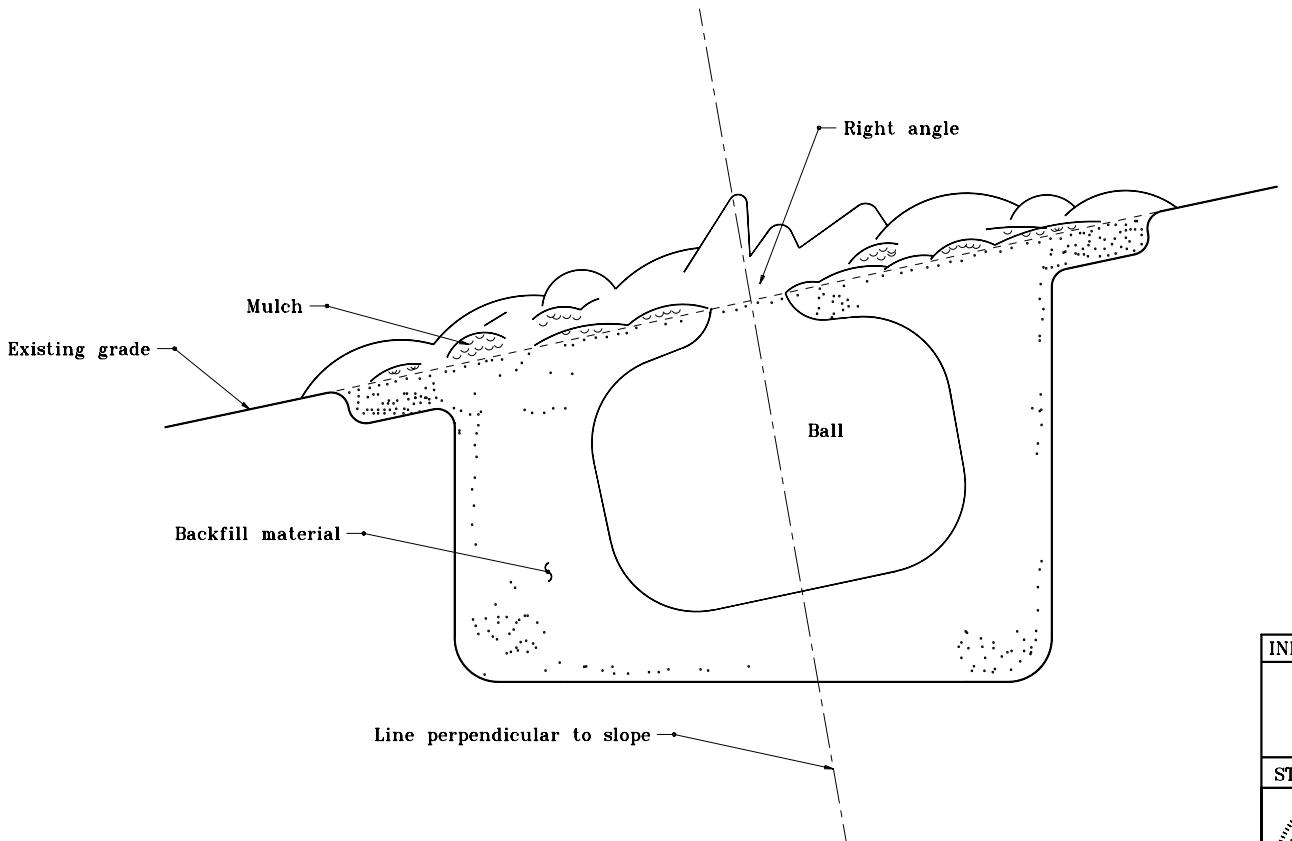

INDIANA DEPARTMENT OF TRANSPORTATION

PLANTING ON SLOPE

APRIL 1995

STANDARD DRAWING NO. **E 622-LSPL-07**

ANTHONY L. UREMOVICH REGISTERED No. 18095 STATE OF INDIANA PROFESSIONAL ENGINEER

DESIGN STANDARDS ENGINEER

DETAILS PLACED IN THIS FORMAT 11-15-99

/s/ Anthony L. Uremovich 11-15-99
DESIGN STANDARDS ENGINEER DATE

/s/ Firooz Zandi 11-15-99
CHIEF HIGHWAY ENGINEER DATE

ORIGINALLY APPROVED 4-01-95

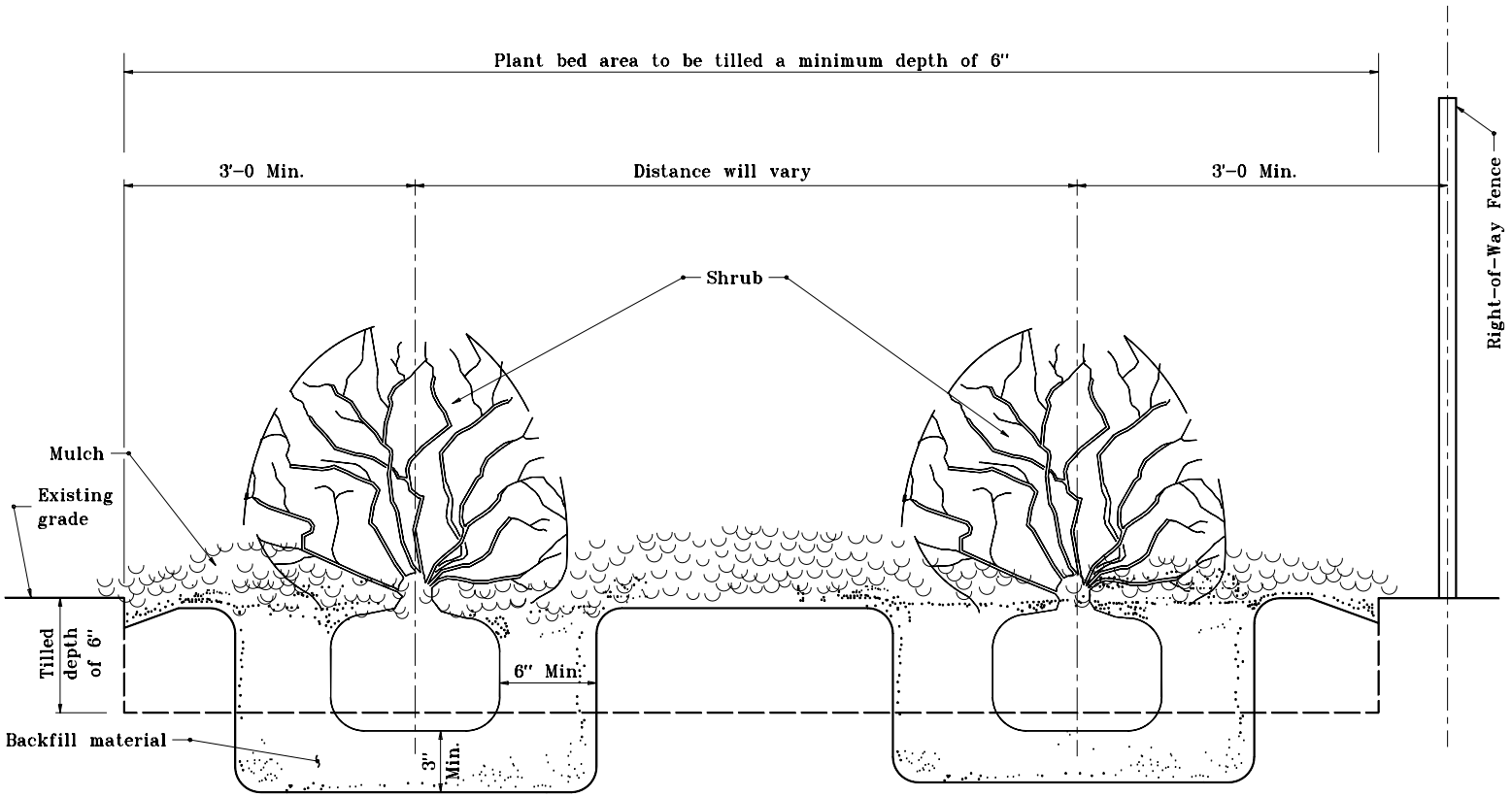

GENERAL NOTES

1. Take specified mulch depth to edge of bed over 3'-0 distance from center of outer plant.
2. See Standard Drawing E 622-LSPL-10 for typical plan of shrub bed.

INDIANA DEPARTMENT OF TRANSPORTATION

TYPICAL SECTION OF SHRUB BED

APRIL 1995

STANDARD DRAWING NO. **E 622-LSPL-08**

ANTHONY L. UREMOVICH REGISTERED No. 18095 STATE OF INDIANA PROFESSIONAL ENGINEER

DESIGN STANDARDS ENGINEER

DETAILS PLACED IN THIS FORMAT 11-15-99

/s/ Anthony L. Uremovich 11-15-99
DESIGN STANDARDS ENGINEER DATE

/s/ Firooz Zandi 11-15-99
CHIEF HIGHWAY ENGINEER DATE

ORIGINALLY APPROVED 4-01-95

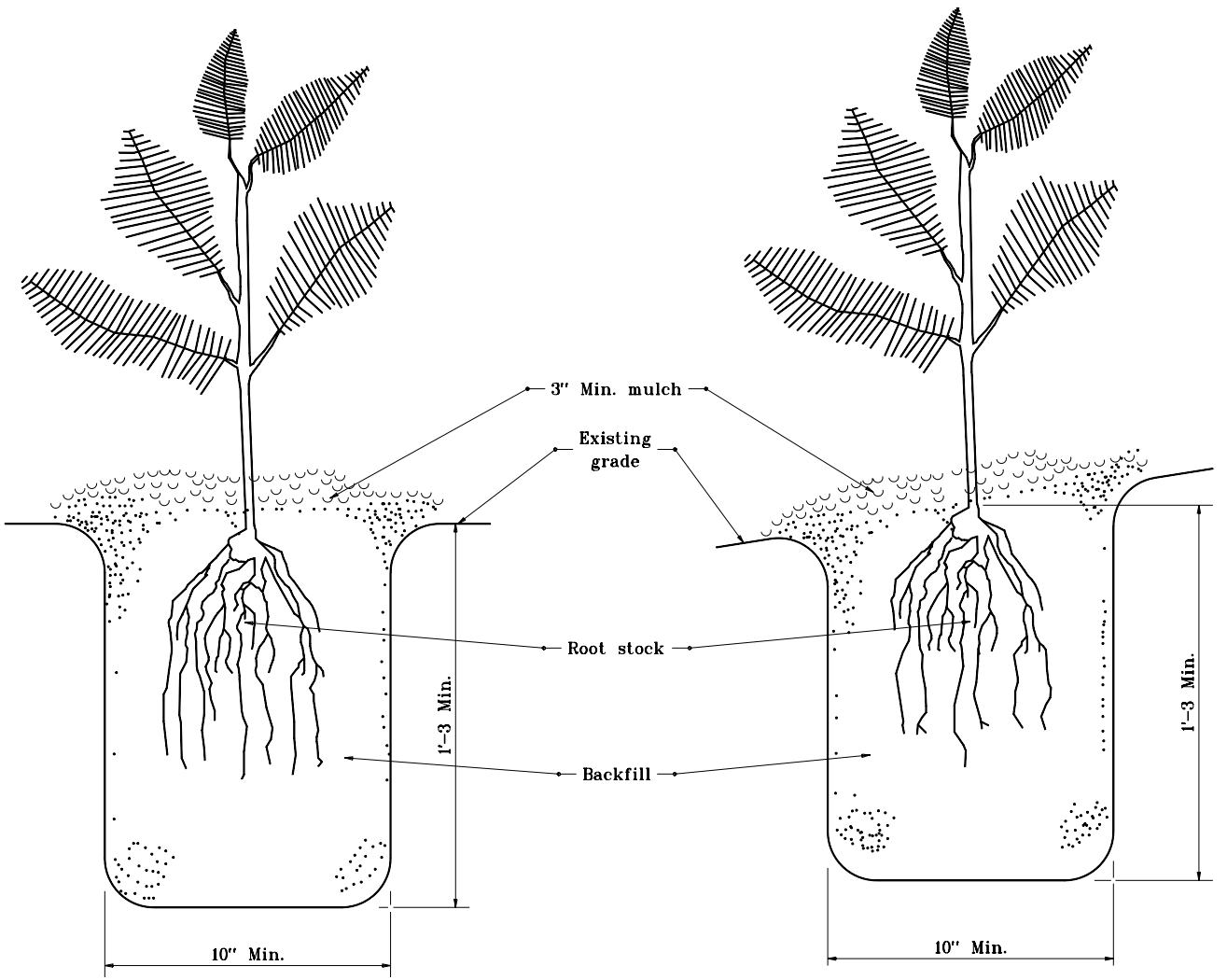

Seedling Variety on Level Land

Seedling Variety on Slope

INDIANA DEPARTMENT OF TRANSPORTATION

PLANTING SEEDLING VARIETIES

APRIL 1995

STANDARD DRAWING NO. **E 622-LSPL-09**

ANTHONY L. UREMOVICH REGISTERED No. 18095 STATE OF INDIANA PROFESSIONAL ENGINEER

DESIGN STANDARDS ENGINEER

DETAILS PLACED IN THIS FORMAT 11-15-99

/s/ Anthony L. Uremovich 11-15-99
DESIGN STANDARDS ENGINEER DATE

/s/ Firooz Zandi 11-15-99
CHIEF HIGHWAY ENGINEER DATE

ORIGINALLY APPROVED 4-01-95

GENERAL NOTES

1. Specific variations on shrub bed configurations and layout will be shown on plans. Plans will show exceptions to 10 ft minimum distance from ditch to center of outer plants.

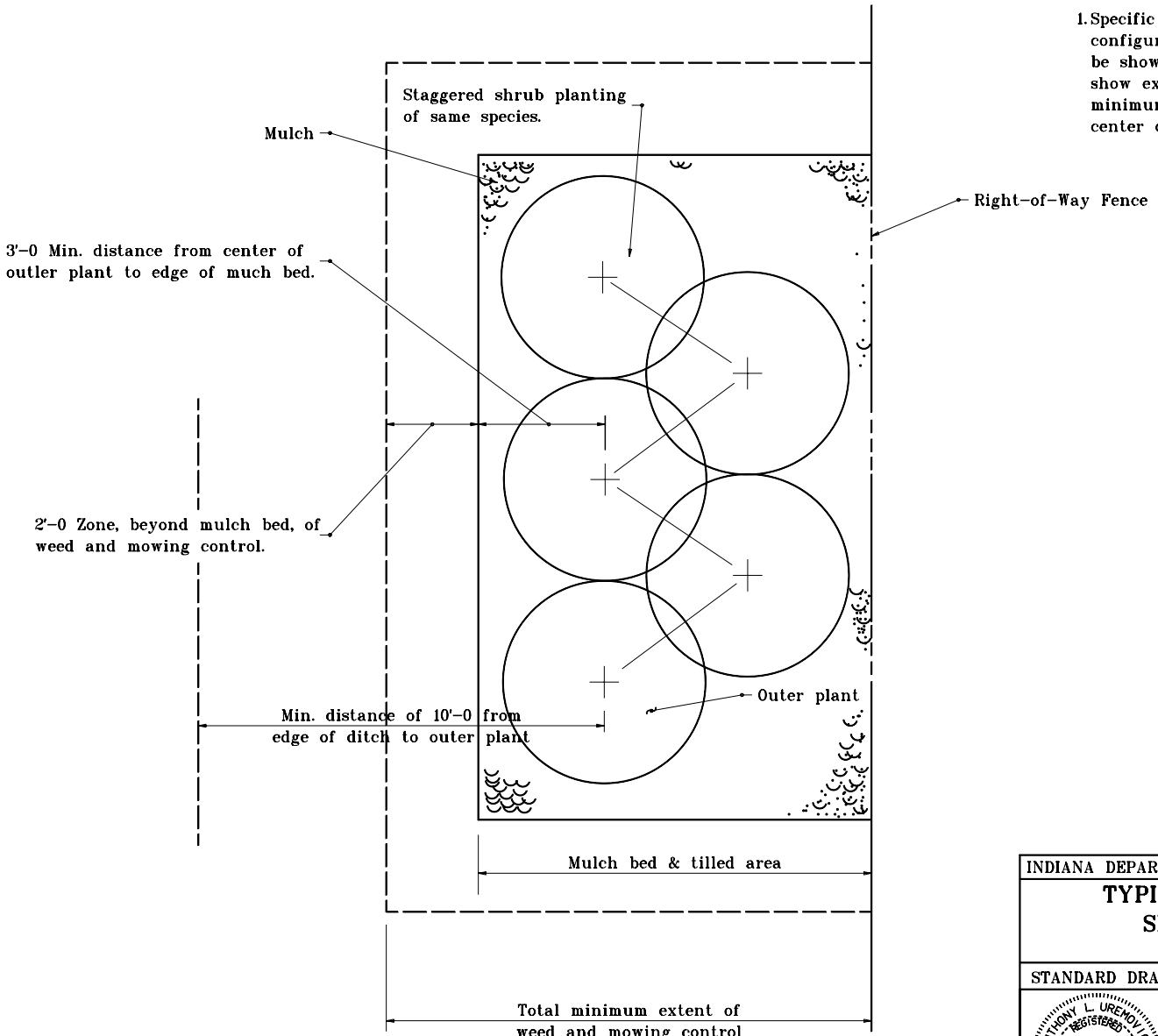

INDIANA DEPARTMENT OF TRANSPORTATION

TYPICAL PLAN OF SHRUB BED

APRIL 1995

STANDARD DRAWING NO. **E 622-LSPL-10**

ANTHONY L. UREMOVICH REGISTERED No. 18095 STATE OF INDIANA PROFESSIONAL ENGINEER

DESIGN STANDARDS ENGINEER

DETAILS PLACED IN THIS FORMAT	11-15-99
/s/ Anthony L. Uremovich DESIGN STANDARDS ENGINEER	11-15-99 DATE
/s/ Firooz Zandi CHIEF HIGHWAY ENGINEER	11-15-99 DATE
ORGINALLY APPROVED	4-01-95

GENERAL NOTES

1. See master plant list for specific dimensions applied to individual plants.

(2) 2 ft minimum distance for weed and mowing control applies to zone beyond stakes or mulch bed.

A = Diameter of ball

B = Depth of ball

C = Diameter of pit

D = Depth of pit

E = Diameter of mulch bed

F = Depth of mulch bed

(3) See Standard Drawing E 622-LSPL-04 for Rubber Hose Detail.

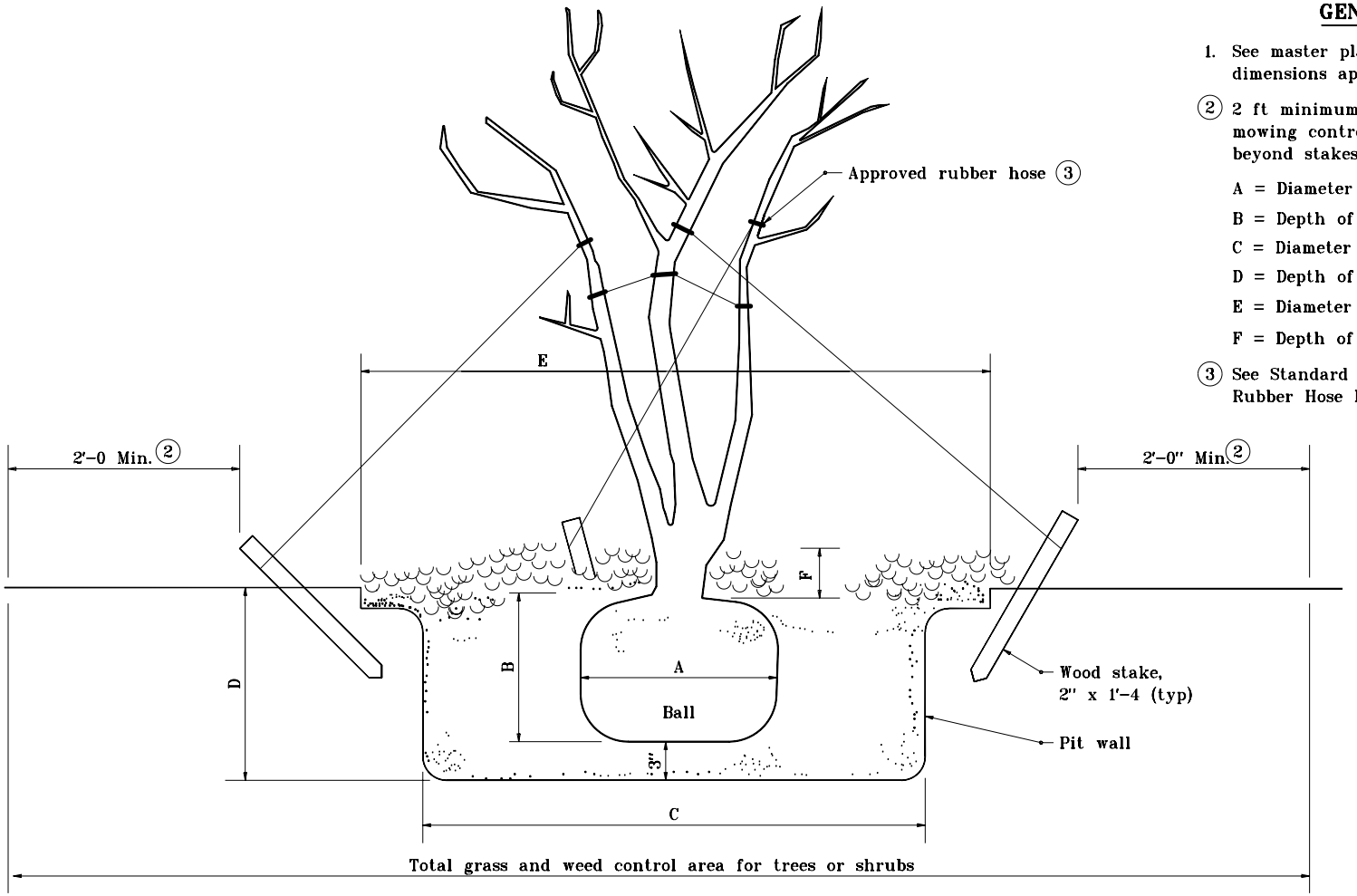

INDIANA DEPARTMENT OF TRANSPORTATION

COMMONLY USED DIMENSIONS

APRIL 1995

STANDARD DRAWING NO. **E 622-LSPL-11**

ANTHONY L. UREMOVICH REGISTERED No. 18095 STATE OF INDIANA PROFESSIONAL ENGINEER

DESIGN STANDARDS ENGINEER

DETAILS PLACED IN THIS FORMAT	11-15-99
/s/ Anthony L. Uremovich DESIGN STANDARDS ENGINEER	11-15-99 DATE
/s/ Firooz Zandi CHIEF HIGHWAY ENGINEER	11-15-99 DATE
ORIGINALLY APPROVED	4-03-95

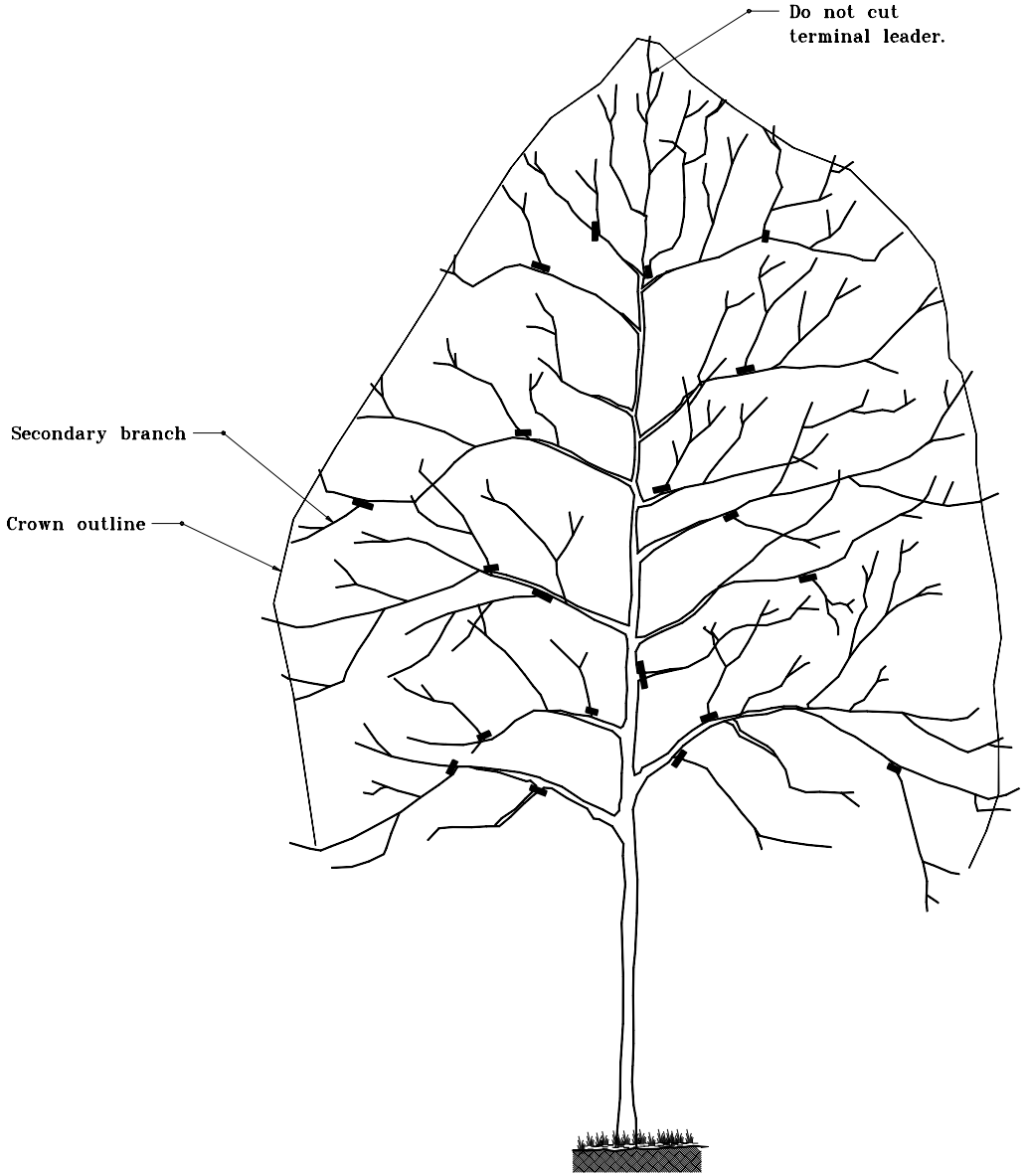

GENERAL NOTES

1. Pruning cuts shall be made as close as possible to remaining branch and in direction of symbol for cuts (▬).

2. Cut back secondary branching to reduce foliage by a minimum of 1/3 to a maximum of 1/2.

INDIANA DEPARTMENT OF TRANSPORTATION

TREE PRUNING
TALL SHADE TREE

APRIL 1995

STANDARD DRAWING NO. **E 622-LSPR-01**

ANTHONY L. UREMOVICH REGISTERED No. 18095 STATE OF INDIANA PROFESSIONAL ENGINEER

DESIGN STANDARDS ENGINEER

DETAILS PLACED IN THIS FORMAT	11-15-99
/s/ Anthony L. Uremovich DESIGN STANDARDS ENGINEER	11-15-99 DATE
/s/ Firooz Zandi CHIEF HIGHWAY ENGINEER	11-15-99 DATE
ORIGINALLY APPROVED	4-01-95

GENERAL NOTES

1. Pruning cuts shall be made as close as possible to remaining branch and in direction of symbol for cuts (▬).

2. Cut back secondary branching to reduce foliage by a minimum of 1/3 to a maximum of 1/2.

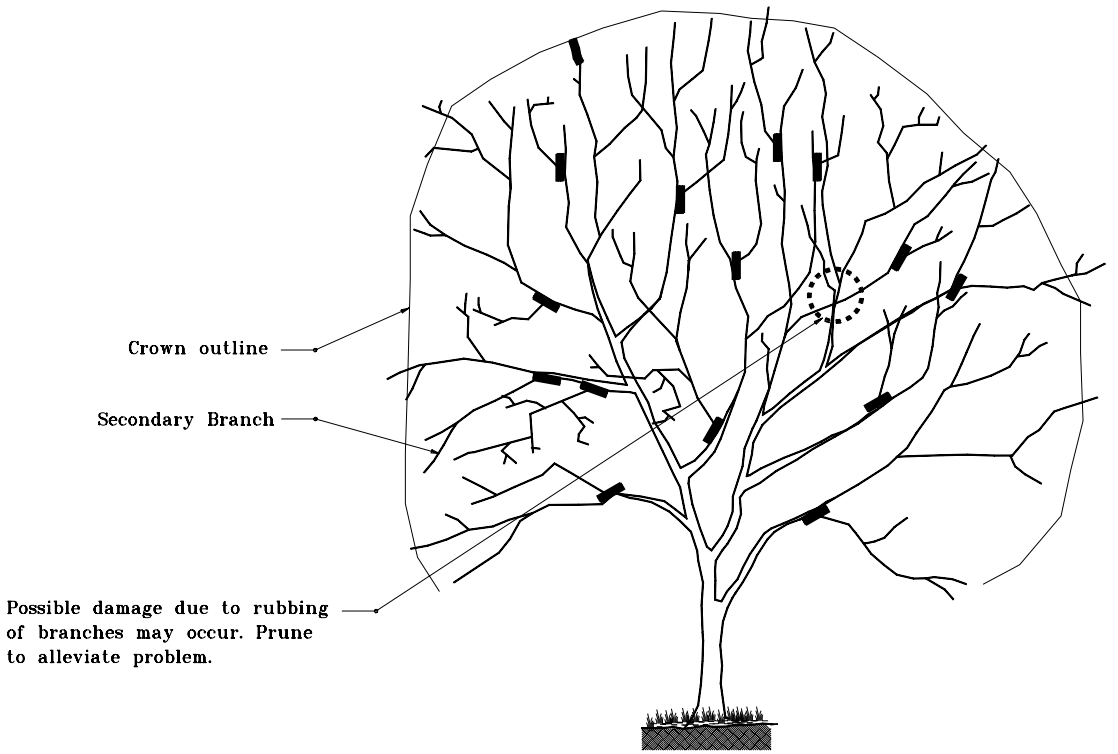

INDIANA DEPARTMENT OF TRANSPORTATION

TREE PRUNING
INTERMEDIATE TREE–ONE STEM

APRIL 1995

STANDARD DRAWING NO. **E 622–LSPR–02**

ANTHONY L. UREMOVICH REGISTERED No. 18095 STATE OF INDIANA PROFESSIONAL ENGINEER

DESIGN STANDARDS ENGINEER

DETAILS PLACED IN THIS FORMAT	11-15-99
/s/ Anthony L. Uremovich DESIGN STANDARDS ENGINEER	11-15-99 DATE
/s/ Firooz Zandi CHIEF HIGHWAY ENGINEER	11-15-99 DATE
ORIGINALLY APPROVED	4-01-95

GENERAL NOTES

1. Pruning cuts shall be made as close as possible to remaining branch and in direction of symbol for cuts (▬).

2. Cut back secondary branching to reduce foliage by a minimum of 1/3 to a maximum of 1/2

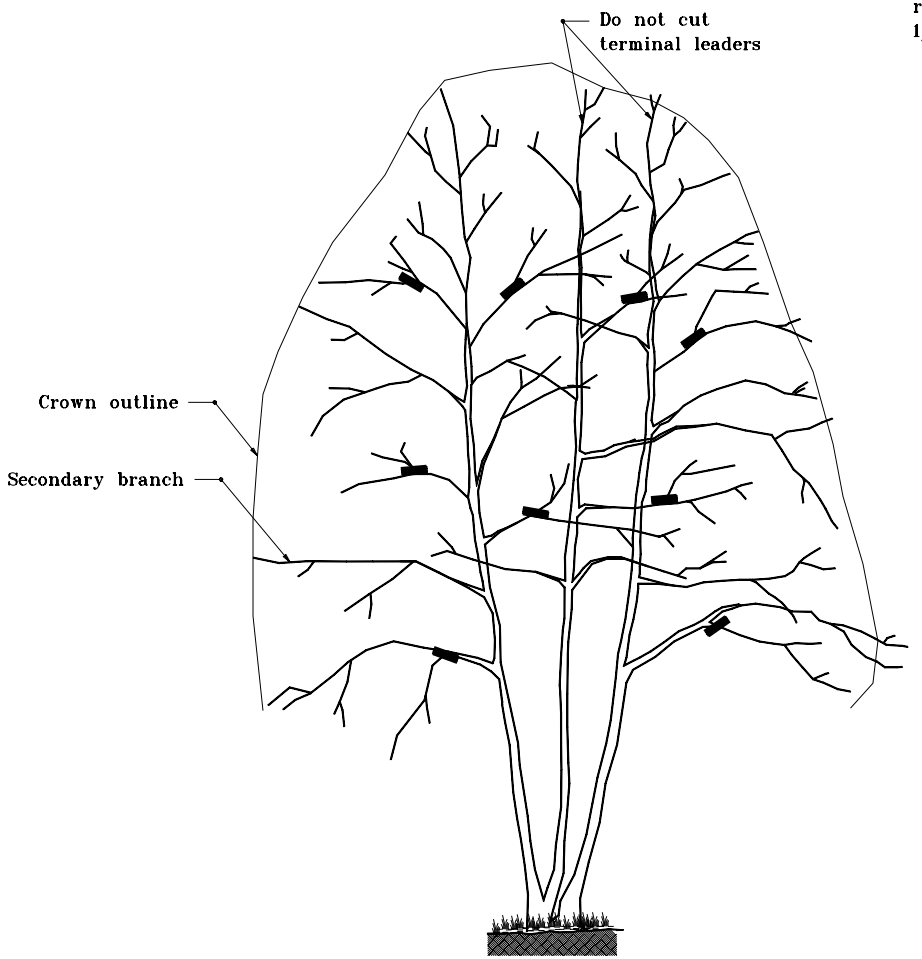

INDIANA DEPARTMENT OF TRANSPORTATION

TREE PRUNING
INTERMED. TREE–MULT. STEM

APRIL 1995

STANDARD DRAWING NO. **E 622–LSPR–03**

ANTHONY L. UREMOVICH REGISTERED No. 18095 STATE OF INDIANA PROFESSIONAL ENGINEER

DESIGN STANDARDS ENGINEER

DETAILS PLACED IN THIS FORMAT 11-15-99

/s/ Anthony L. Uremovich 11-15-99
DESIGN STANDARDS ENGINEER DATE

/s/ Firooz Zandi 11-15-99
CHIEF HIGHWAY ENGINEER DATE

ORIGINALLY APPROVED 4-01-95

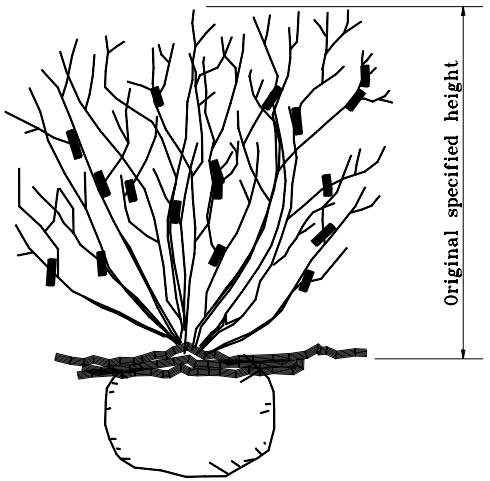

BALLED & BURLAPPED SHRUB

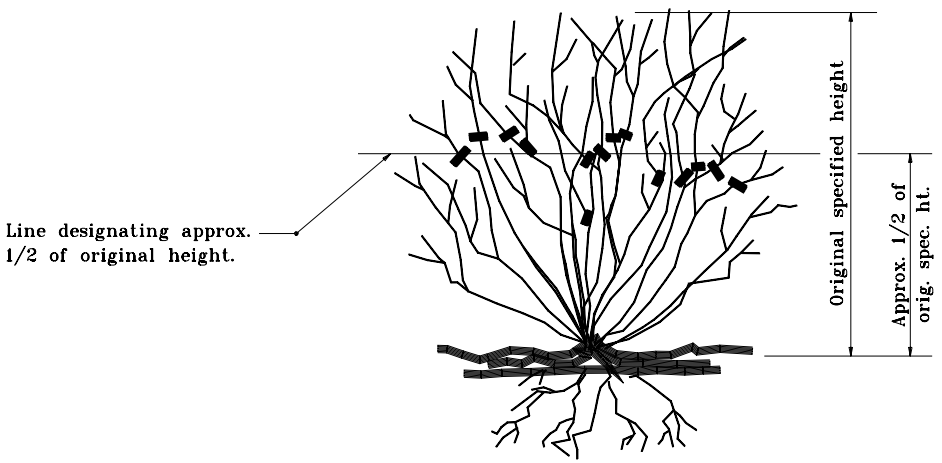

BARE ROOT SHRUB

GENERAL NOTES

1. Pruning operations for balled & burlapped stock shall maintain the natural shape and characteristic branching pattern.

2. Cut back secondary branching to reduce foliage by a minimum of 1/3 to a maximum of 1/2.

3. Budding variations and different growth characteristic of the various shrub species may alter pruning procedures. See suggested procedure on Standard Drawing E 622-LSPR-05 which applies to most shrub species.

INDIANA DEPARTMENT OF TRANSPORTATION

SHRUB PRUNING

APRIL 1995

STANDARD DRAWING NO. **E 622-LSPR-04**

ANTHONY L. UREMOVICH REGISTERED No. 18095 STATE OF INDIANA PROFESSIONAL ENGINEER

DESIGN STANDARDS ENGINEER

DETAILS PLACED IN THIS FORMAT	11-15-99
/s/ Anthony L. Uremovich DESIGN STANDARDS ENGINEER	11-15-99 DATE
/s/ Firooz Zandi CHIEF HIGHWAY ENGINEER	11-15-99 DATE
ORIGINALLY APPROVED	4-01-95

GENERAL NOTES

(1) See Standard Drawing E 622-LSPL-04 for Rubber Hose Detail.

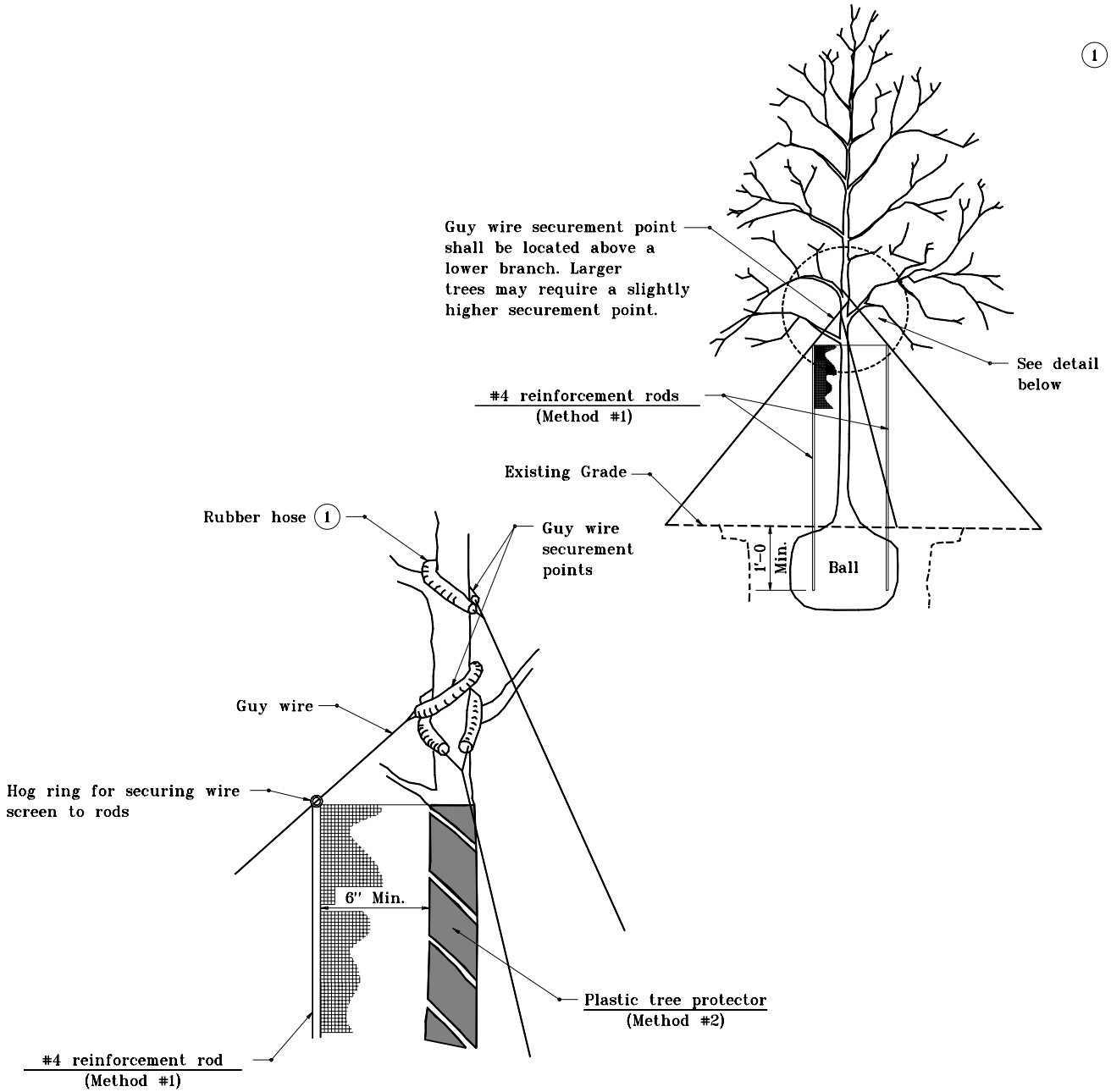

DETAIL APPLIES TO TREES 1¼" CALIPER AND GREATER

INDIANA DEPARTMENT OF TRANSPORTATION

TREE PROTECTION

APRIL 1995

STANDARD DRAWING NO. **E 622-LSPR-05**

ANTHONY L. UREMOVICH REGISTERED No. 18095 STATE OF INDIANA PROFESSIONAL ENGINEER

DESIGN STANDARDS ENGINEER

DETAILS PLACED IN THIS FORMAT	11-15-99
/s/ Anthony L. Uremovich	11-15-99
DESIGN STANDARDS ENGINEER	DATE
/s/ Firooz Zandi	11-15-99
CHIEF HIGHWAY ENGINEER	DATE
ORIGINALLY APPROVED	4-01-95

GENERAL NOTES

(1) Cut at bud starts opposite the base of bud and slants up toward top of bud.

(2) Cut at secondary branch shall be parallel to remaining branch.

Improper Cut
Pruning cut too slanting (too much heartwood is exposed). Die-back will occur.

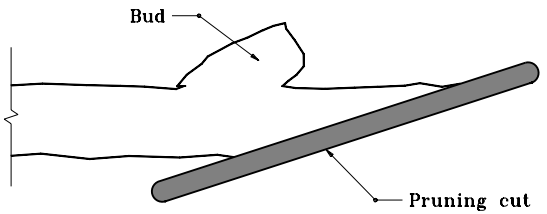

Improper Cut
Pruning cut too far beyond bud. Die-back will occur.

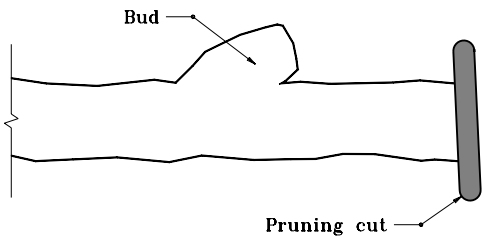

Improper Cut
Pruning cut too close to bud (will interfere with bud growth).

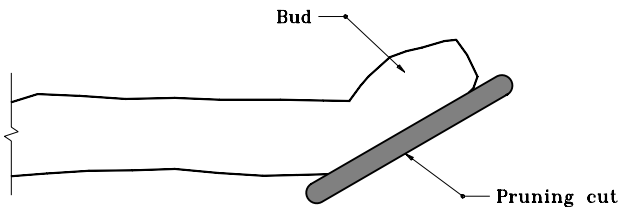

Suggested Cuts

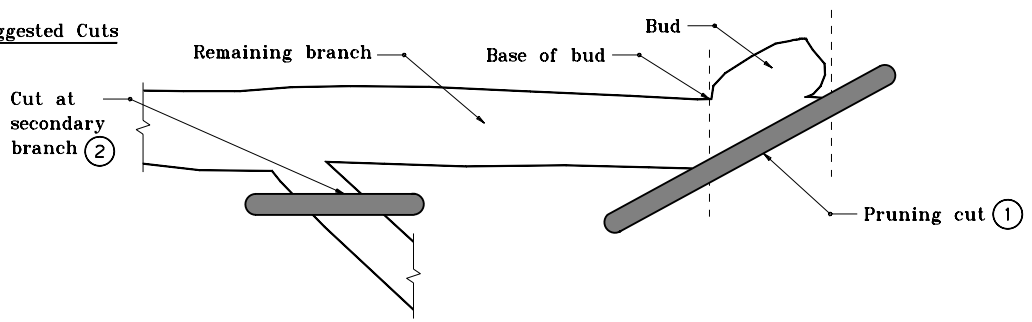

INDIANA DEPARTMENT OF TRANSPORTATION

PRUNING PROCEDURE TREES AND SHRUBS

APRIL 1995

STANDARD DRAWING NO. **E 622-LSPR-06**

ANTHONY L. UREMOVICH REGISTERED No. 18095 STATE OF INDIANA PROFESSIONAL ENGINEER

DESIGN STANDARDS ENGINEER

DETAILS PLACED IN THIS FORMAT	11-15-99
/s/ Anthony L. Uremovich, DESIGN STANDARDS ENGINEER	11-15-99
/s/ Firooz Zandi, CHIEF HIGHWAY ENGINEER	11-15-99
ORIGINALLY APPROVED	4-01-95

GENERAL NOTES

1. This is a suggested method for pruning heavier limbs. If these limbs are not properly cut, damage to adjacent portions of the tree may occur.

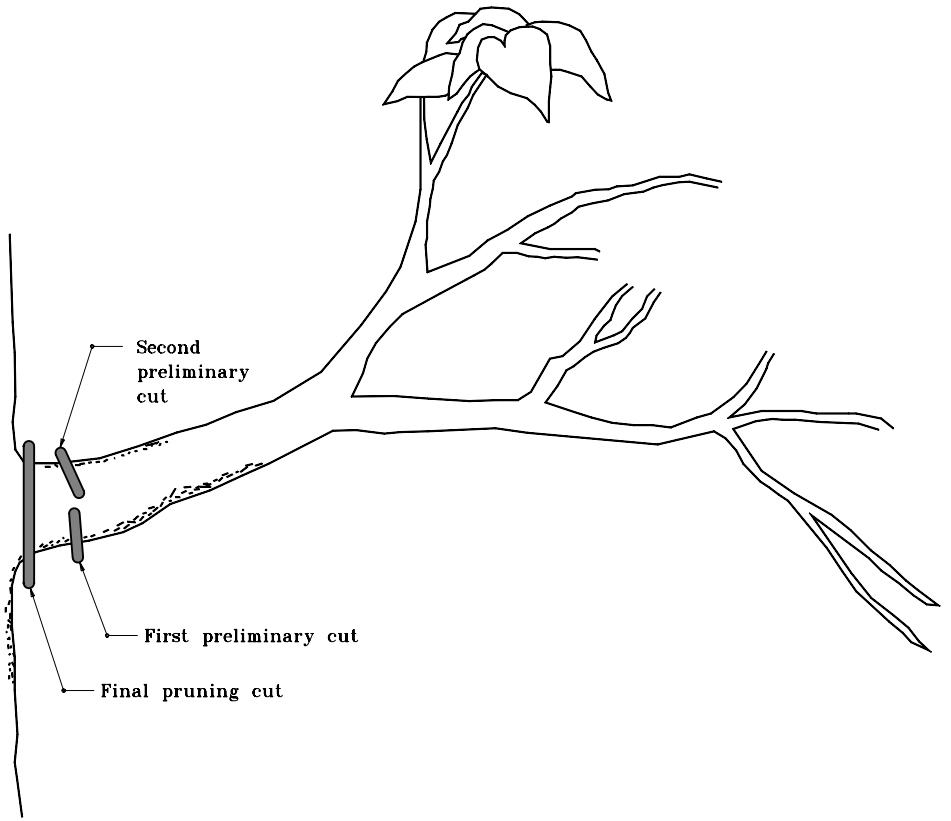

INDIANA DEPARTMENT OF TRANSPORTATION

PRUNING PROCEDURE HEAVIER LIMBS

APRIL 1995

STANDARD DRAWING NO. **E 622-LSPR-07**

ANTHONY L. UREMOVICH REGISTERED No. 18095 STATE OF INDIANA PROFESSIONAL ENGINEER

DESIGN STANDARDS ENGINEER

DETAILS PLACED IN THIS FORMAT	11-15-99
/s/ Anthony L. Uremovich	11-15-99
DESIGN STANDARDS ENGINEER	DATE
/s/ Firooz Zandi	11-15-99
CHIEF HIGHWAY ENGINEER	DATE
ORIGINALLY APPROVED	4-01-95

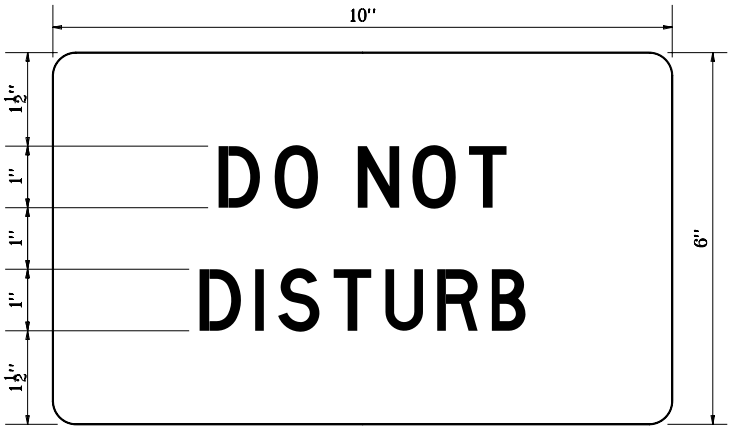

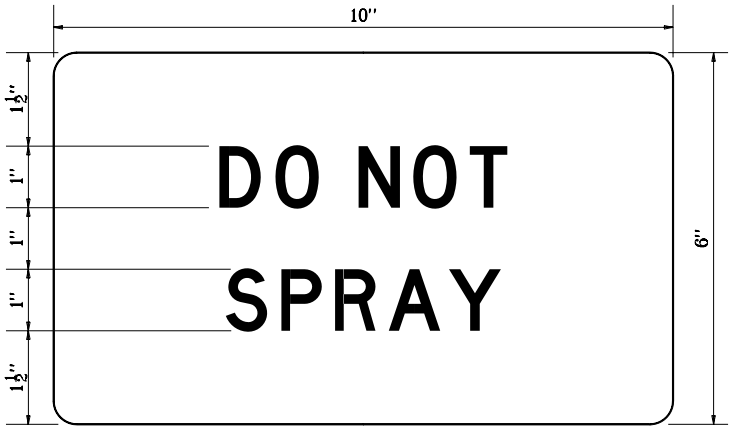

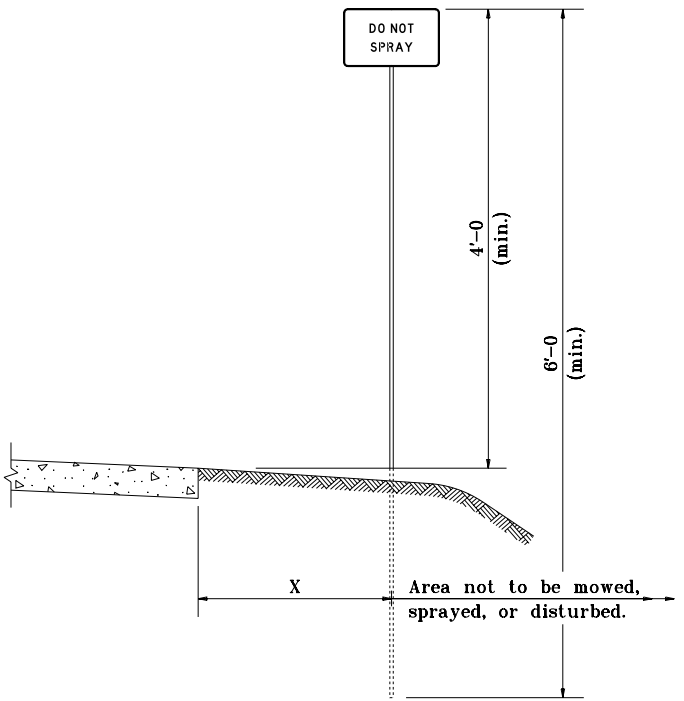

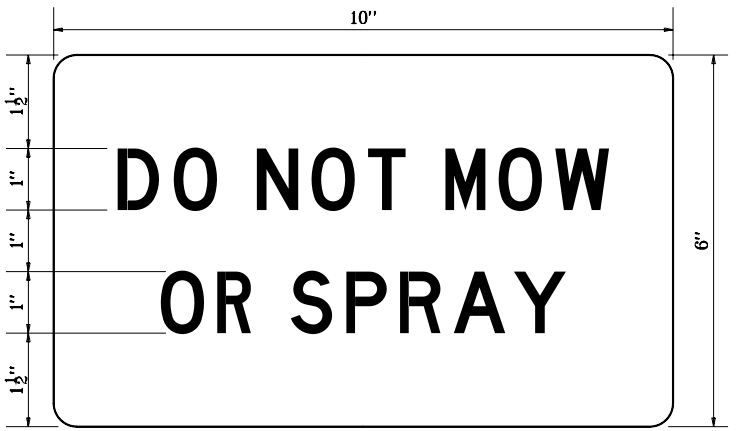

X = Approximate distance from edge of paved shoulder to edge of area not to be mowed, sprayed, or disturbed.

INDIANA DEPARTMENT OF TRANSPORTATION

LANDSCAPE SIGNS

JUNE 1996

STANDARD DRAWING NO. **E 622-LSSN-01**

ANTHONY L. UREMOVICH REGISTERED No. 18095 STATE OF INDIANA PROFESSIONAL ENGINEER

DESIGN STANDARDS ENGINEER

DETAILS PLACED IN THIS FORMAT 11-15-99

/s/ Anthony L. Uremovich 11-15-99
DESIGN STANDARDS ENGINEER DATE

/s/ Firooz Zandi 11-15-99
CHIEF HIGHWAY ENGINEER DATE

ORIGINALLY APPROVED 6-03-96

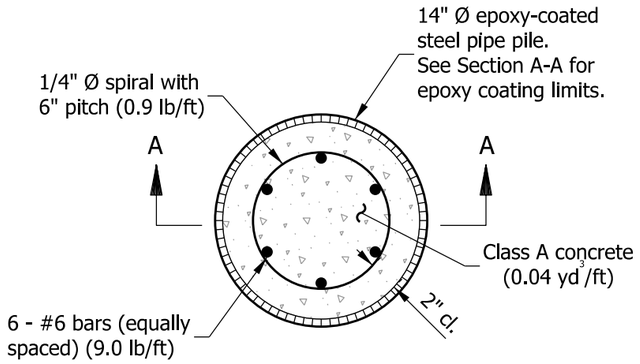

REINFORCED-CONCRETE FILLED EPOXY-COATED STEEL PIPE PILE ENCASEMENT PLAN VIEW

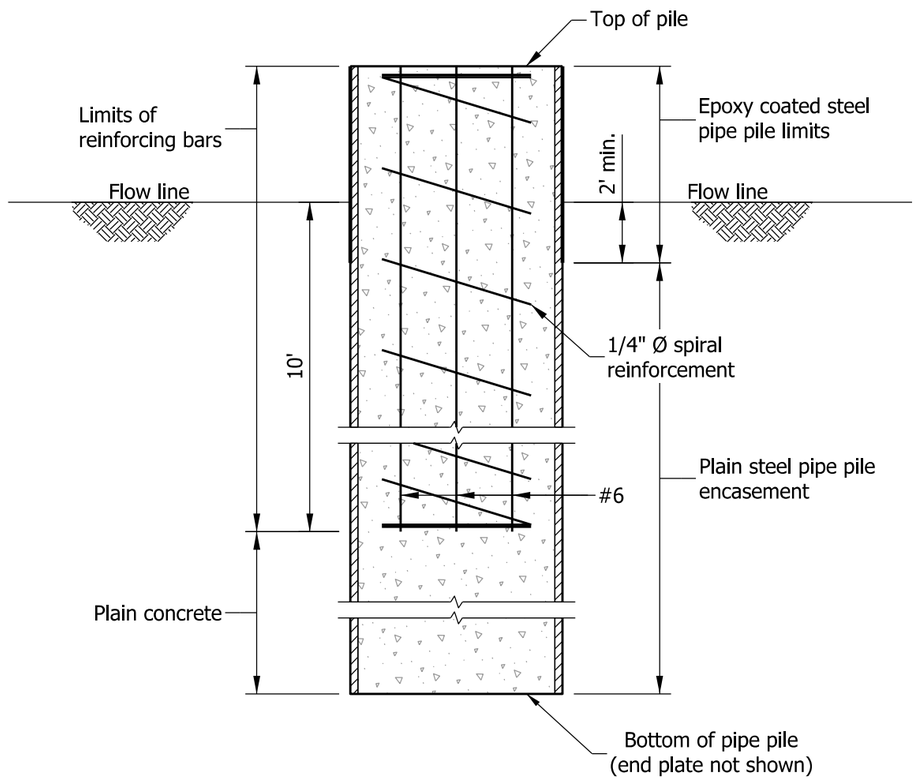

SECTION A-A

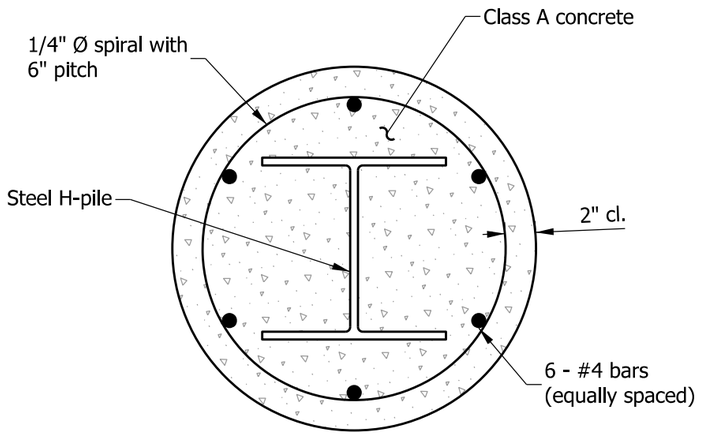

STEEL H - PILES
REINFORCED-CONCRETE ENCASEMENT PLAN VIEW

TABLE OF MATERIALS			
Steel H-Pile designation	Minimum pile diameter	Reinforcing bars, lb/ft	Class A concrete, yd³/ft
HP 14	2'-3"	5.8	0.12
HP 12	2'-0"	5.6	0.10
HP 10	1'-9"	5.4	0.08

INDIANA DEPARTMENT OF TRANSPORTATION

REINFORCED-CONCRETE ENCASEMENT FOR PILES

SEPTEMBER 2012

STANDARD DRAWING NO. E 701-BPIL-01

RICHARD L. VanCLEAVE REGISTERED No. 9750 STATE OF INDIANA PROFESSIONAL ENGINEER

/s/ Richard L. VanCleave 09/04/12
SUPERVISOR, ROADWAY STANDARDS DATE

/s/ Mark A. Miller 09/04/12
CHIEF ENGINEER DATE

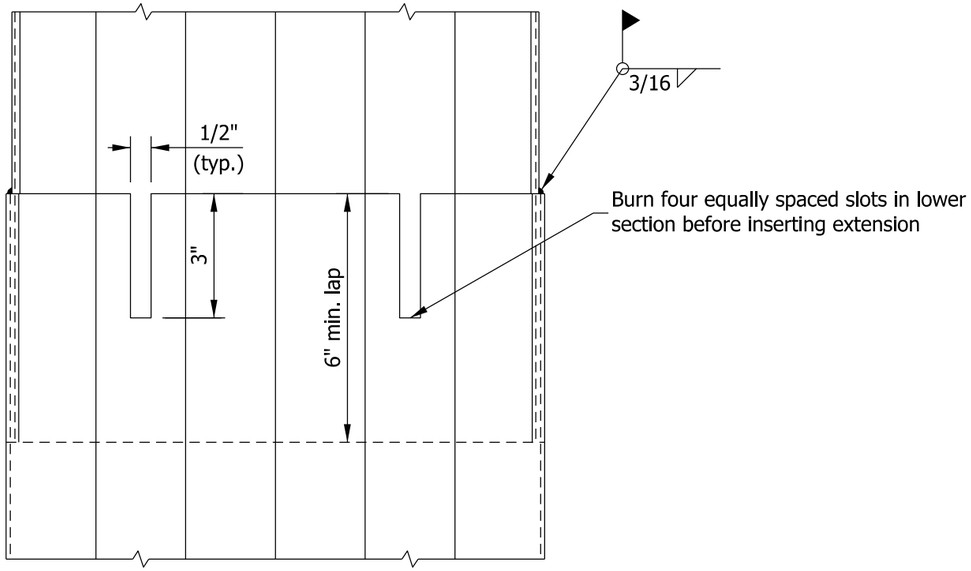

FOR FLUTED PIPE

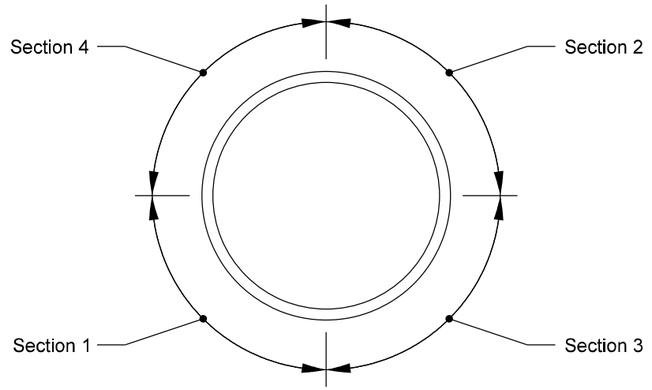

WELDING SEQUENCE

FOR ROUNDED PIPE

WELDING DETAIL

INDIANA DEPARTMENT OF TRANSPORTATION

FIELD SPLICING PIPE PILES

SEPTEMBER 2012

STANDARD DRAWING NO. E 701-BPIL-02

RICHARD L. VanCLEAVE
REGISTERED
No. 9750
STATE OF INDIANA
PROFESSIONAL ENGINEER

/s/ Richard L. VanCleave 09/04/12
SUPERVISOR, ROADWAY STANDARDS DATE

/s/ Mark A. Miller 09/04/12
CHIEF ENGINEER DATE

PROCEDURE FOR SPLICING PARTIALLY DRIVEN PILING

1. Upper Pile Section

Prepare outside of both flanges and one side of web by beveling to a 45° angle. Prepare all surfaces to be welded by grinding.

WEB ELEVATION

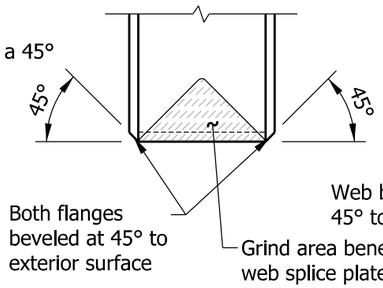

FLANGE ELEVATION

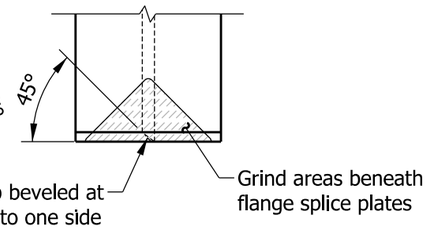

END VIEW

2. Lower Pile Section

Prepare top of pile by restoring it to its original cross section. Grind all surfaces to be welded, extending 1/2" beyond weld area(s).

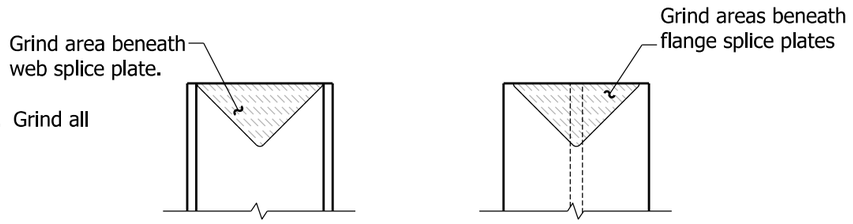

3. Upper Pile Section

Fillet weld web splice plate to upper pile section at two locations.

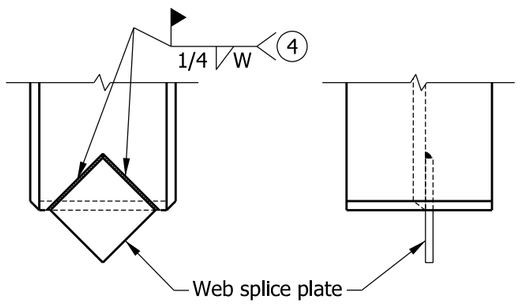

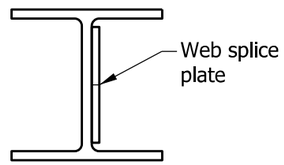

4. Lower Pile Section

Tack weld two backer plates to inside of flange.

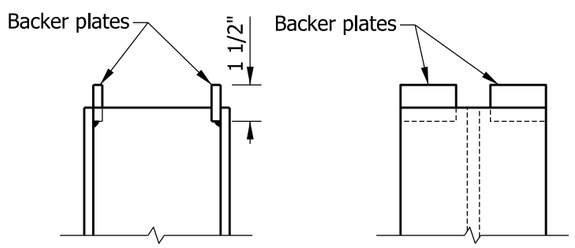

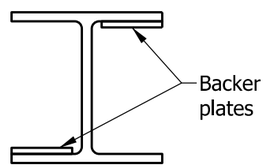

Procedure continued on Standard Drawing E 701-BPIL-04.

NOTES

1. Steel H piling may be spliced in a horizontal position prior to driving, using splice plates and web and flange welds as shown.
2. Two flange splice plates, one web splice plate, and four backer plates will be required per splice.
3. All fillet welds shall be single pass.
4. See table for splice plate dimensions W and F.

SPLICE PLATE AND BACKER PLATE DIMENSIONS

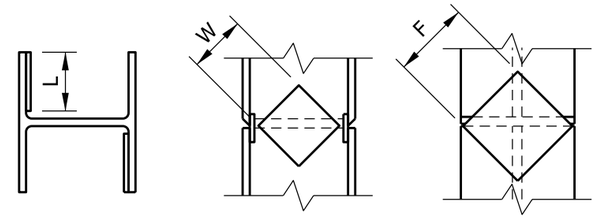

END VIEW | ELEVATION VIEW OF WEB | ELEVATION VIEW OF FLANGE

H-PILE SIZE	HP 10	HP 12	HP 14
Flange Splice Plate, F	7"	8 1/4"	10 1/4"
Web Splice Plate, W	5 3/8"	6 3/4"	8"
Backer Plate Length, L	4 1/8"	5"	6 1/4"

NOTE: Splice plate thickness = 3/8"
Backer plate thickness = 1/4"

INDIANA DEPARTMENT OF TRANSPORTATION

STEEL H-PILE SPLICE

SEPTEMBER 2012

STANDARD DRAWING NO. E 701-BPIL-03

RICHARD L. VanCLEAVE REGISTERED No. 9750 STATE OF INDIANA PROFESSIONAL ENGINEER

/s/ Richard L. VanCleave 09/04/12
SUPERVISOR, ROADWAY STANDARDS DATE

/s/ Mark A. Miller 09/04/12
CHIEF ENGINEER DATE

PROCEDURE FOR SPLICING PARTIALLY DRIVEN PILING (cont.)

5. Combine Pile Sections

Lift and hold upper pile section into place, maintaining 1/4" gap between upper and lower pile sections by using the remaining two backer plates as a spacing guide. Plumb the pile. Tack weld the untacked side of the two backer plates to the inside upper flange. Remove the backer plate spacers and tack weld them to the inside flange portion of the upper and lower sections of the pile. Fillet weld the remaining two sides of the web splice plate to the lower section.

WEB ELEVATION

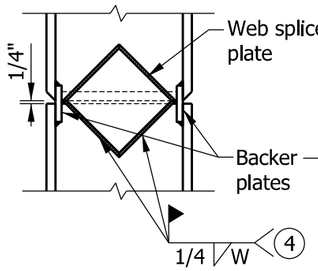

FLANGE ELEVATION

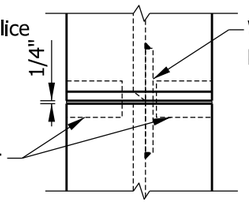

END VIEW

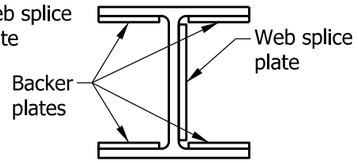

6. Combined Pile Section

Complete Joint Penetration (CJP) weld the web. See Detail A.

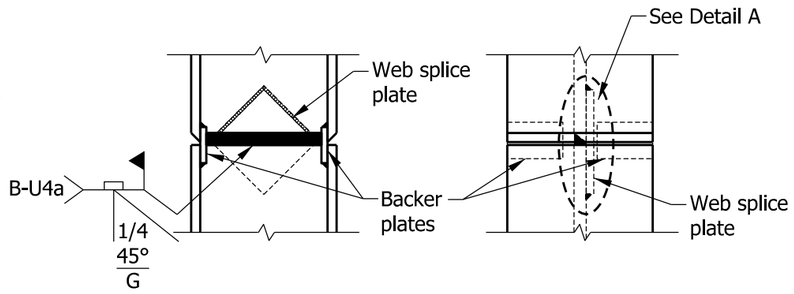

7. Combined Pile Section

Complete Joint Penetration (CJP) weld both flanges. Grind weld smooth with the pile exterior face. See Detail B.

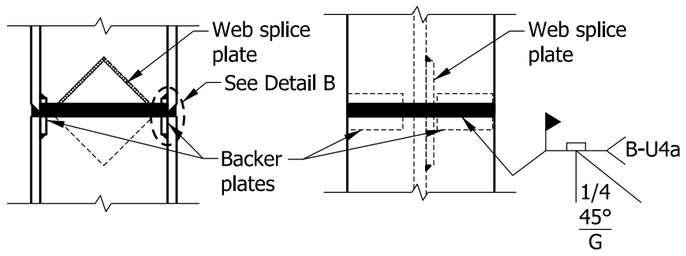

8. Combined Pile Section

Fillet weld the flange splice plates to the flanges.

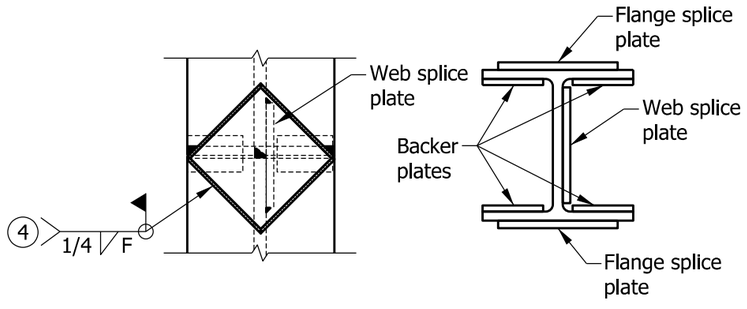

NOTES

1. Steel H piling may be spliced in a horizontal position prior to driving, using splice plates and web and flange welds as shown.
2. Two flange splice plates, one web splice plate, and four backer plates will be required per splice.
3. All fillet welds shall be single pass.

(4) See Standard Drawing E 701-BPIL-03 table for splice plate dimensions W and F.

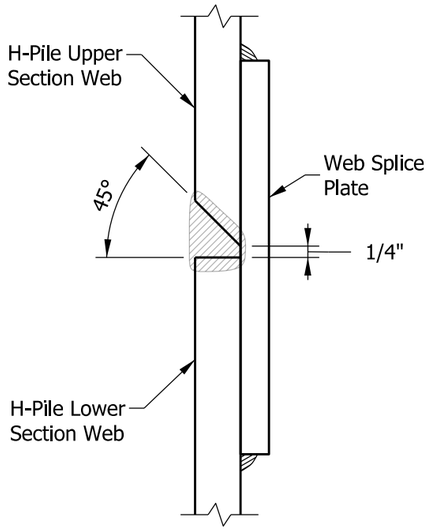

DETAIL A

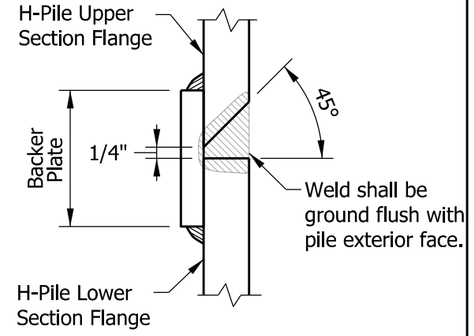

DETAIL B

INDIANA DEPARTMENT OF TRANSPORTATION

STEEL H-PILE SPLICE (CONTINUED)

SEPTEMBER 2012

STANDARD DRAWING NO. E 701-BPIL-04

RICHARD L. VanCLEAVE REGISTERED No. 9750 STATE OF INDIANA PROFESSIONAL ENGINEER

/s/ Richard L. VanCleave 09/04/12
SUPERVISOR, ROADWAY STANDARDS DATE

/s/ Mark A. Miller 09/04/12
CHIEF ENGINEER DATE

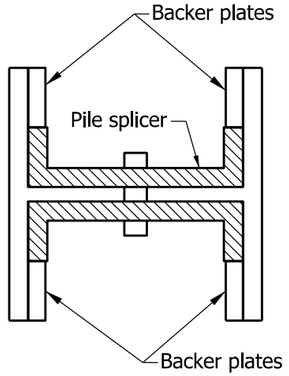

PLAN

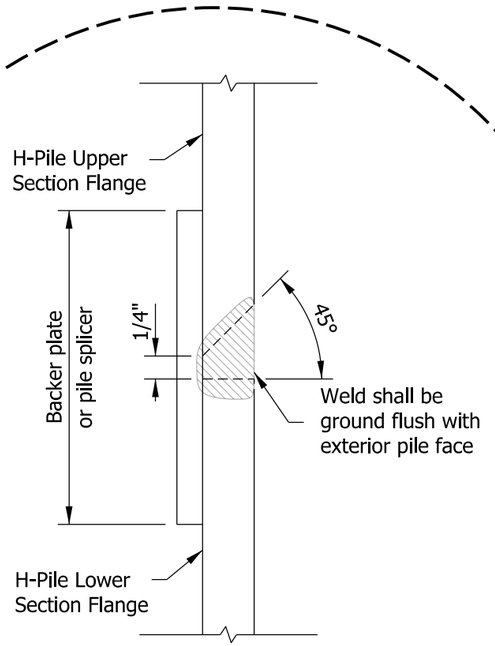

WELDING DETAIL

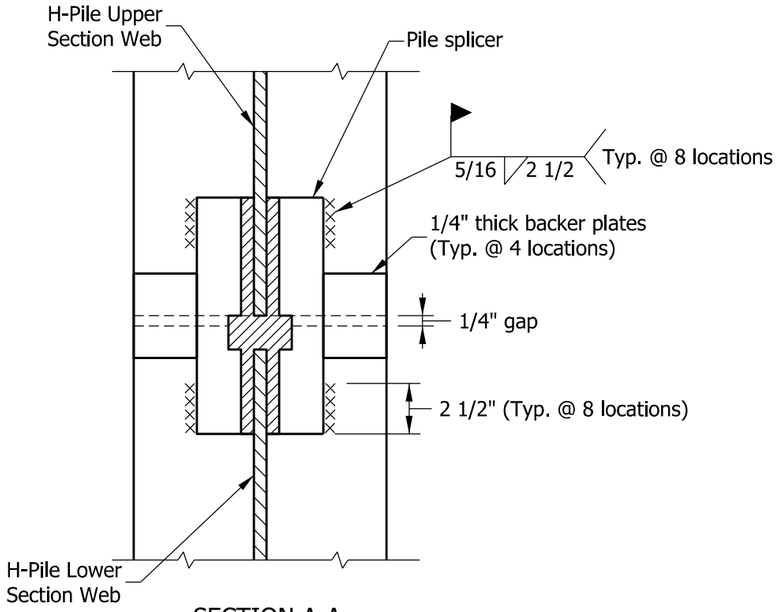

SECTION A-A

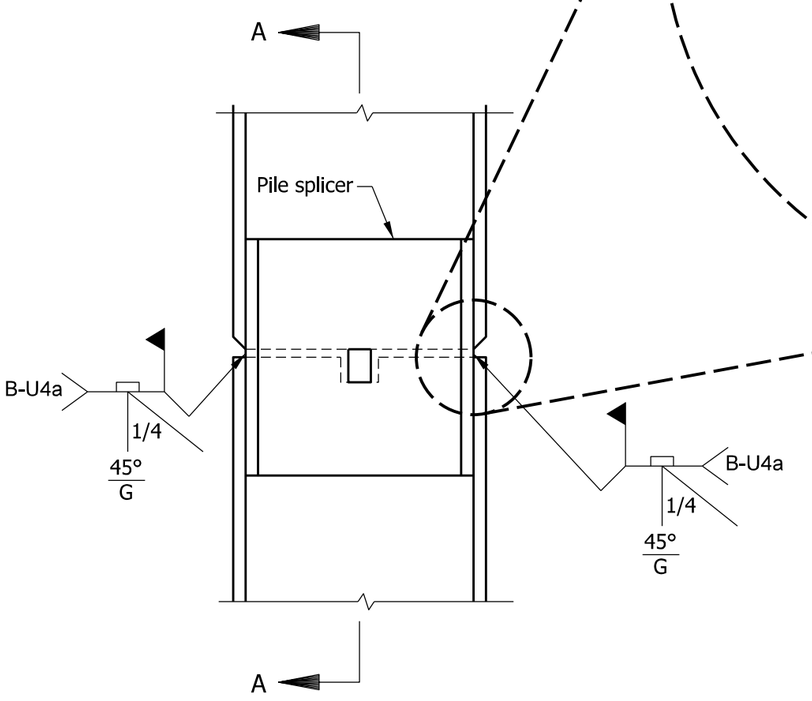

ELEVATION

ALTERNATE STEEL H-PILE SPLICE
USING MECHANICAL PILE SPLICER

INDIANA DEPARTMENT OF TRANSPORTATION

ALTERNATE STEEL
H-PILE MECHANICAL SPLICE

SEPTEMBER 2012

STANDARD DRAWING NO. E 701-BPIL-05

RICHARD L. VanCLEAVE
REGISTERED
No. 9750
STATE OF INDIANA
PROFESSIONAL ENGINEER

/s/ Richard L. VanCleave 09/04/12
SUPERVISOR, ROADWAY STANDARDS DATE

/s/ Mark A. Miller 09/04/12
CHIEF ENGINEER DATE

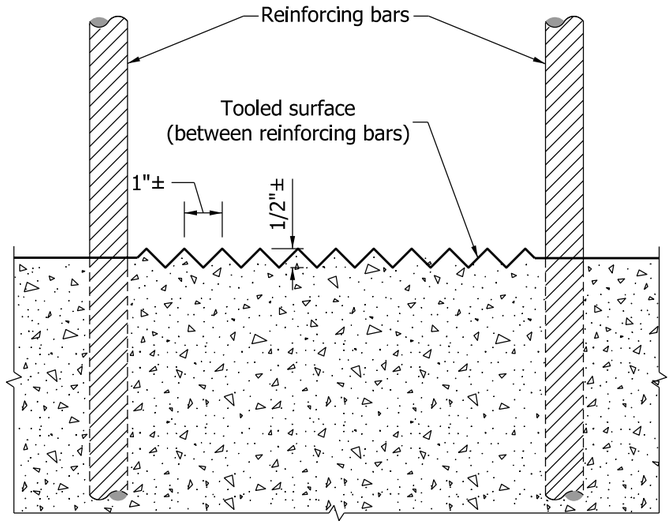

INDIANA DEPARTMENT OF TRANSPORTATION

TYPE A
CONSTRUCTION JOINT

MARCH 2003

STANDARD DRAWING NO. E 702-CJTA-01

RICHARD L. VanCLEAVE
REGISTERED
No. 9750
STATE OF INDIANA
PROFESSIONAL ENGINEER

DETAILS PLACED IN THIS FORMAT 09/04/12

/s/ Richard L. Van Cleave *09/04/12*

SUPERVISOR, ROADWAY STANDARDS DATE

/s/ Mark A. Miller *09/04/12*

CHIEF ENGINEER DATE

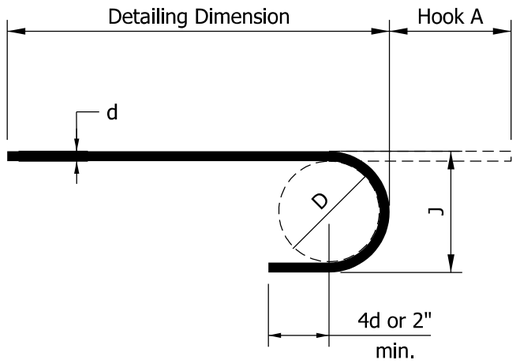

180° HOOK

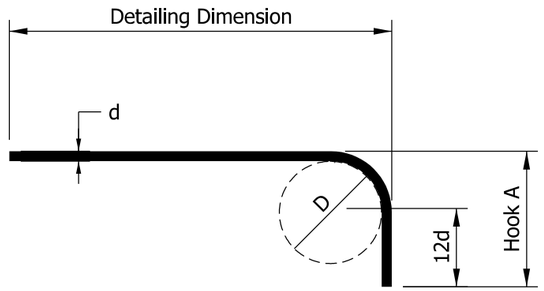

90° HOOK

REINFORCING BAR NOTES

1. All dimensions on bending diagrams shall be measured out-to-out of bars.
2. All dimensions on details shall be measured on centerlines of bars, except where cover or cl. is indicated.
3. Bent bars will be given a numeric bar mark, e.g., 588. The last two digits, e.g., 88, indicate the mark. The characters preceding the last two digits, e.g., 5, indicate the size of the bar.
4. Bent reinforcing bars' marks on standard drawings will consist of the first digit as the bar size; the second digit, 7, indicating that it shall be placed in a bridge railing, or 8, indicating that it shall be placed in a bridge-railing transition, or 9, indicating that it shall be placed elsewhere; and the third and fourth digits as the serial number for that bar size.
5. Straight bars will be designated by size and length.
6. Standard size hooks shown shall be used on all hooked bars unless noted.
7. See the plans for lap and embedment lengths.

STANDARD END HOOKS				
		180° HOOK		90° HOOK
BAR SIZE	D	HOOK A	J	HOOK A
#3	2 1/4"	5"	3"	6"
#4	3"	6"	4"	8"
#5	3 3/4"	7"	5"	10"
#6	4 1/2"	8"	6"	1'-0"
#7	5 1/4"	10"	7"	1'-2"
#8	6"	11"	8"	1'-4"
#9	9 1/2"	1'-3"	11 3/4"	1'-7"
#10	10 3/4"	1'-5"	1'-1 1/4"	1'-10"
#11	12"	1'-7"	1'-2 3/4"	2'-0"
#14	18 1/4"	2'-3"	1'-9 3/4"	2'-7"
#18	24"	3'-0"	2'-4 1/2"	3'-5"

INDIANA DEPARTMENT OF TRANSPORTATION

BAR BENDING DETAILS

SEPTEMBER 2012

STANDARD DRAWING NO. E 703-BRST-01

RICHARD L. VanCLEAVE REGISTERED No. 9750 STATE OF INDIANA PROFESSIONAL ENGINEER

/s/ Richard L. Van Cleave 09/04/12
SUPERVISOR, ROADWAY STANDARDS DATE

/s/ Mark A. Miller 09/04/12
CHIEF ENGINEER DATE

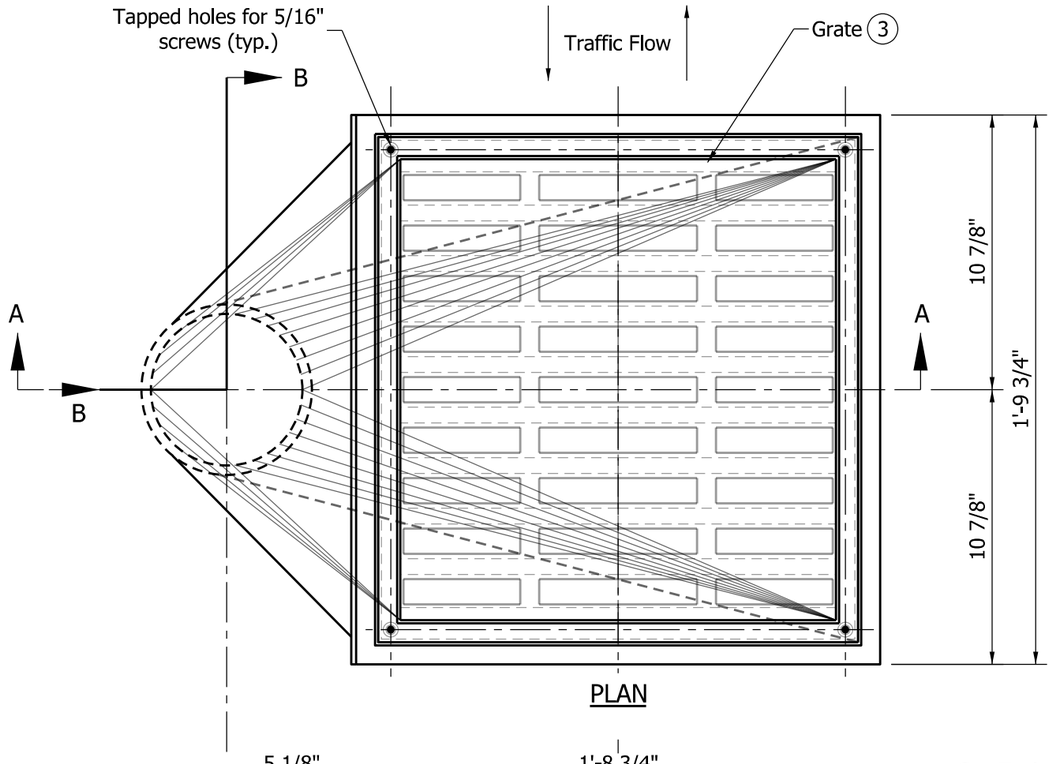

PLAN

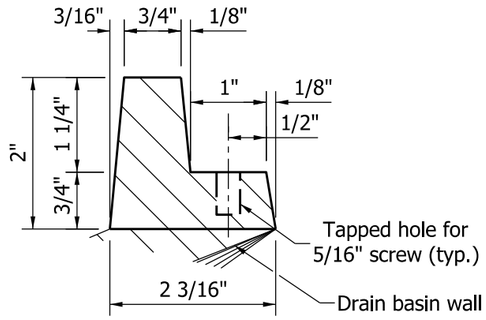

TYPICAL GRATE SHELF PROFILE A
(OUTLET SIDE OF BASIN)

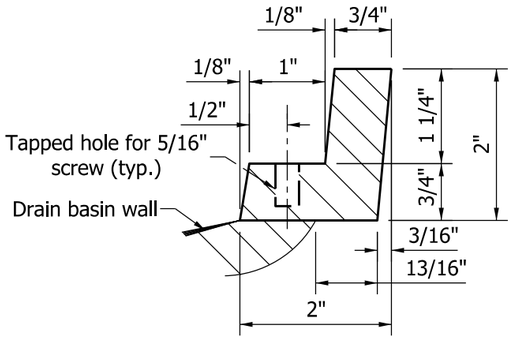

TYPICAL GRATE SHELF PROFILE B
(NON-OUTLET SIDE OF BASIN)

NOTES

1. See Standard Drawing E 715-BDCG-01 for deck drain casting extension pipe details.
2. See Standard Drawing E 704-BDCG-05 for adjusting frame details.
3. See Standard Drawing E 704-BDCG-02 for grate details.

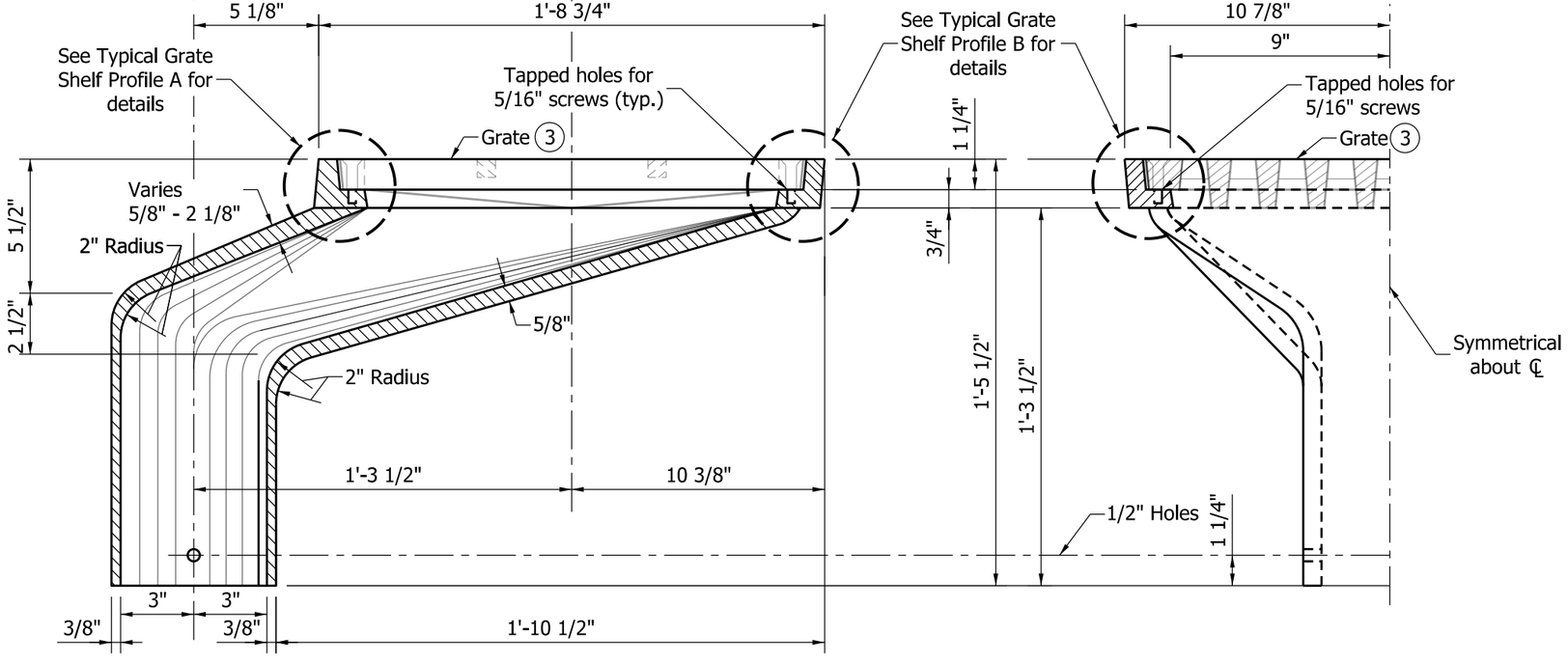

SECTION A-A

HALF SECTION B-B

INDIANA DEPARTMENT OF TRANSPORTATION

DECK DRAIN
TYPE OS

SEPTEMBER 2012

STANDARD DRAWING NO. E 704-BDCG-01

RICHARD L. VanCLEAVE REGISTERED No. 9750 STATE OF INDIANA PROFESSIONAL ENGINEER

/s/ Richard L. VanCleave 09/04/12
SUPERVISOR, ROADWAY STANDARDS DATE

/s/ Mark A. Miller 09/04/12
CHIEF ENGINEER DATE

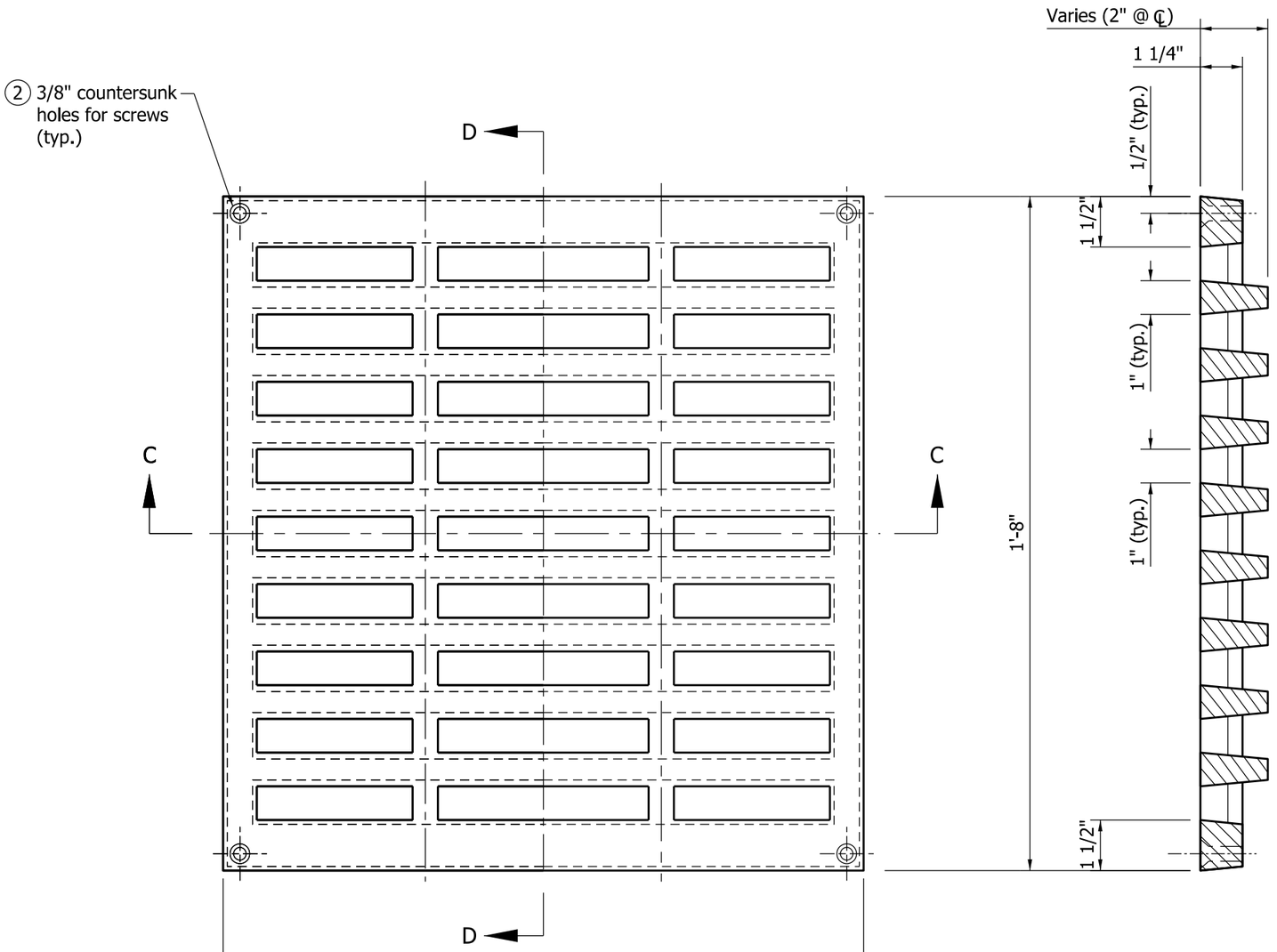

PLAN

SECTION D-D

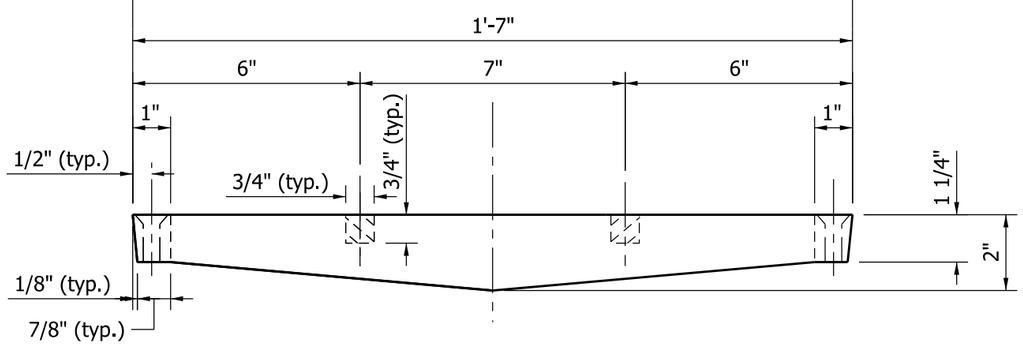

SECTION C-C

NOTES

1. This grate used with Type OS deck drain. See Standard Drawing E 704-BDCG-01 for deck drain details.

(2) 4 - 5/16" x 1 3/4" flat-head stainless steel screws required for each grate.

INDIANA DEPARTMENT OF TRANSPORTATION

DECK DRAIN TYPE OS
GRATE

SEPTEMBER 2012

STANDARD DRAWING NO. E 704-BDCG-02

RICHARD L. VanCLEAVE REGISTERED No. 9750 STATE OF INDIANA PROFESSIONAL ENGINEER

/s/ Richard L. VanCleave 09/04/12
SUPERVISOR, ROADWAY STANDARDS DATE

/s/ Mark A. Miller 09/04/12
CHIEF ENGINEER DATE

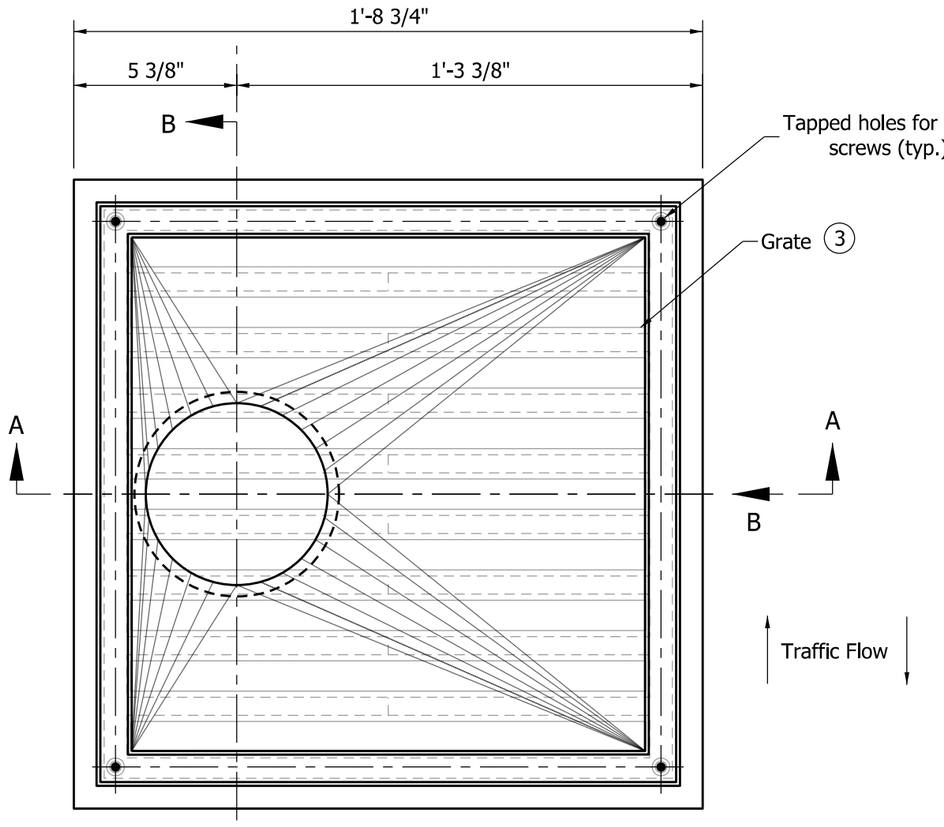

PLAN

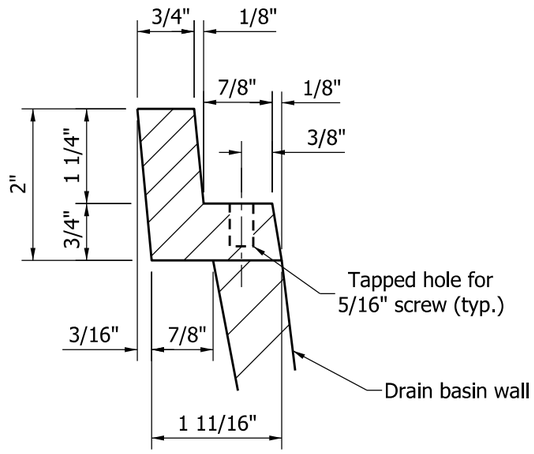

TYPICAL GRATE SHELF PROFILE

NOTES

1. See Standard Drawing E 715-BDCG-01 for deck drain casting extension pipe details.
2. See Standard Drawing E 704-BDCG-05 for adjusting frame details.

(3) See Standard Drawing E 704-BDCG-04 for grate details.

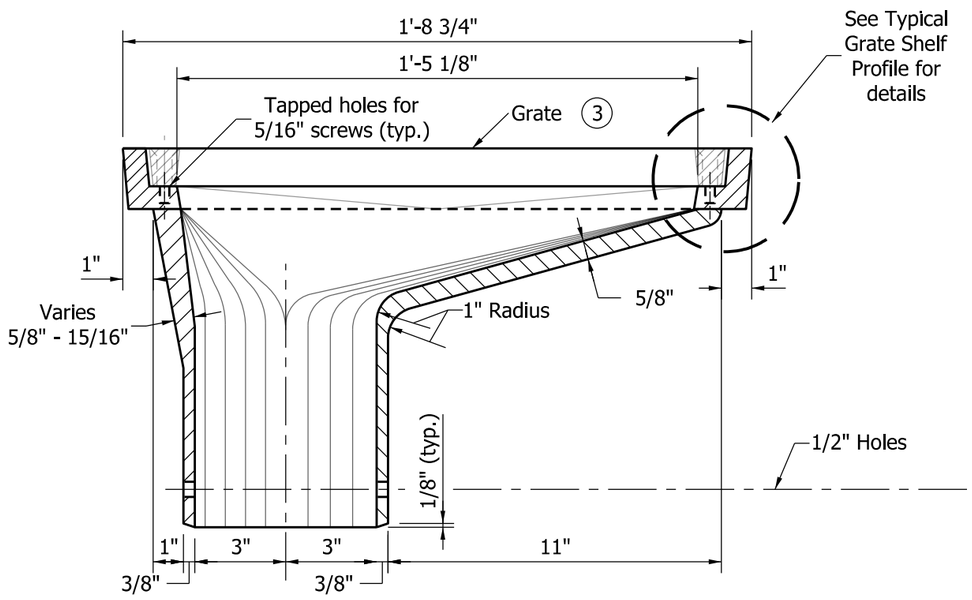

SECTION A-A

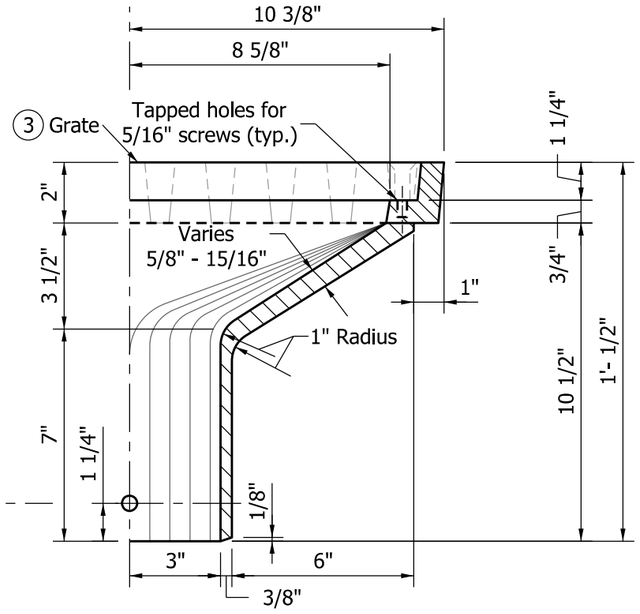

HALF SECTION B-B

INDIANA DEPARTMENT OF TRANSPORTATION

DECK DRAIN
TYPE SQ

SEPTEMBER 2012

STANDARD DRAWING NO. E 704-BDCG-03

RICHARD L. VanCLEAVE REGISTERED No. 9750 STATE OF INDIANA PROFESSIONAL ENGINEER

/s/ Richard L. VanCleave 09/04/12
SUPERVISOR, ROADWAY STANDARDS DATE

/s/ Mark A. Miller 09/04/12
CHIEF ENGINEER DATE

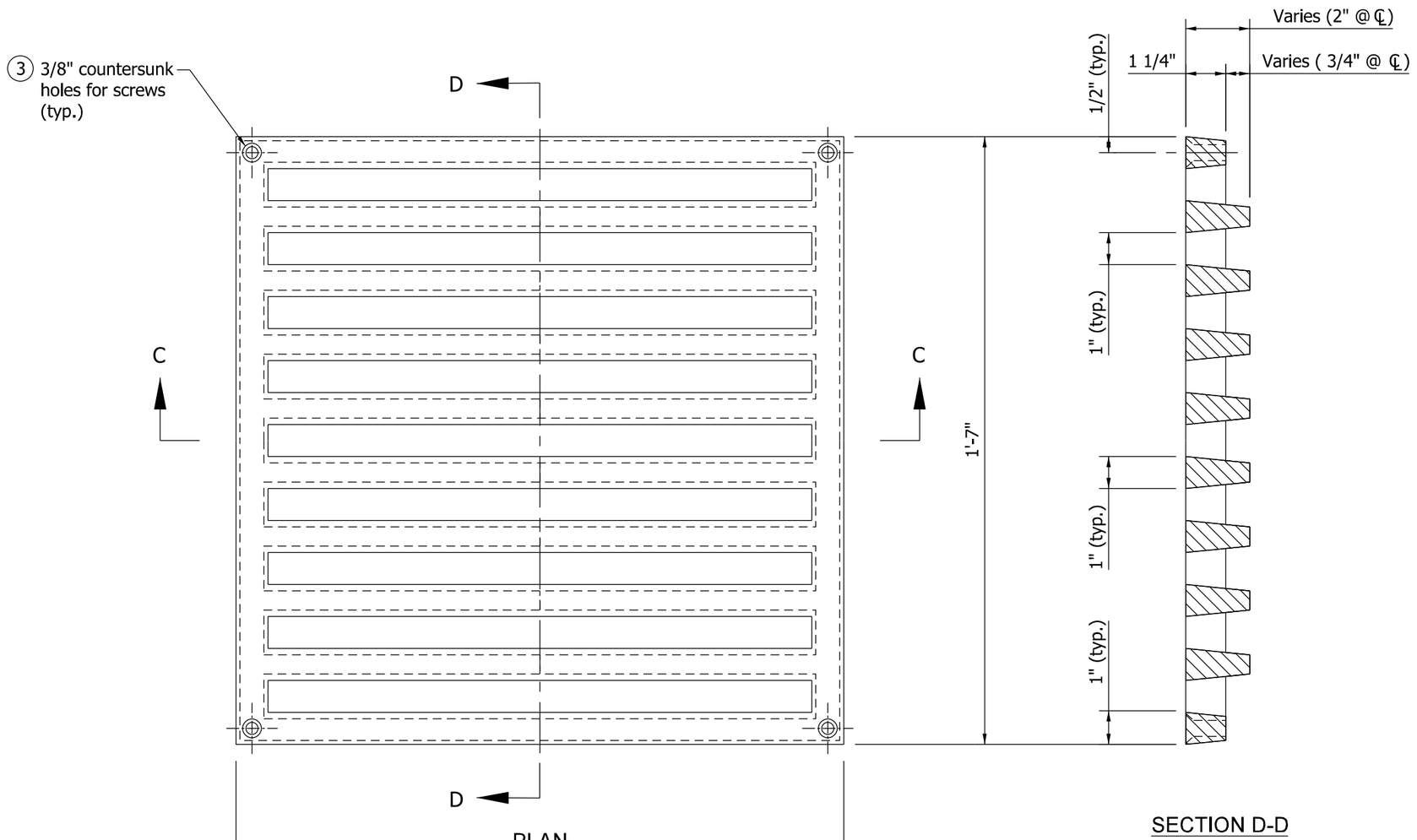

PLAN

SECTION D-D

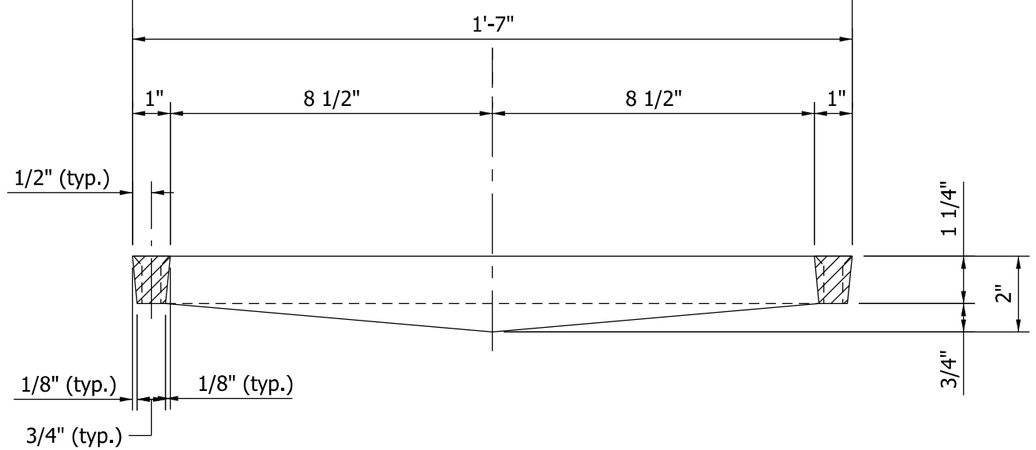

SECTION C-C

NOTES

1. See the floor details on the plans for orientation of the grate.
2. This grate used with Type SQ deck drain. See Standard Drawing E 704-BDCG-03 for deck drain details.

(3) 4 - 5/16" x 1 3/4" flat-head stainless steel screws required for each grate.

INDIANA DEPARTMENT OF TRANSPORTATION

DECK DRAIN TYPE SQ
GRATE

SEPTEMBER 2012

STANDARD DRAWING NO. E 704-BDCG-04

RICHARD L. VanCLEAVE REGISTERED No. 9750 STATE OF INDIANA PROFESSIONAL ENGINEER

/s/ Richard L. VanCleave 09/04/12
SUPERVISOR, ROADWAY STANDARDS DATE

/s/ Mark A. Miller 09/04/12
CHIEF ENGINEER DATE

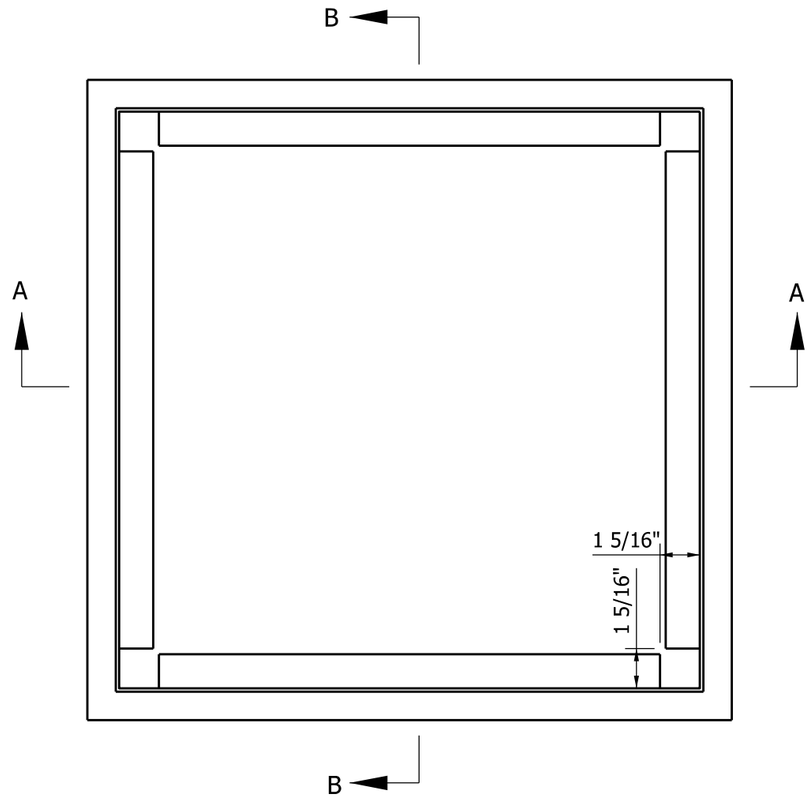

PLAN VIEW

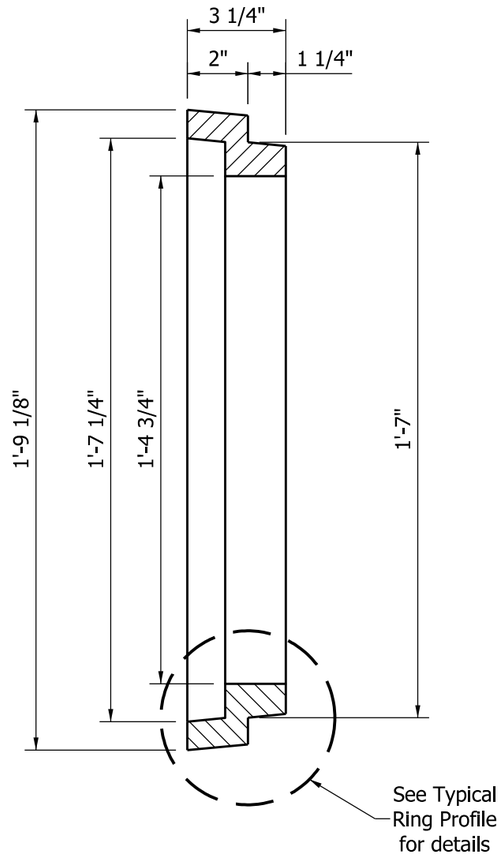

SECTION B-B

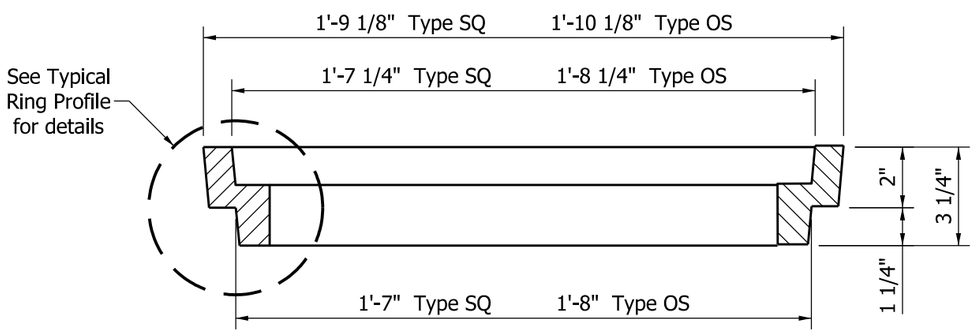

SECTION A-A

NOTES

1. 4 - 5/16" x 3 3/4" flat-head stainless steel screws required when frame is used.

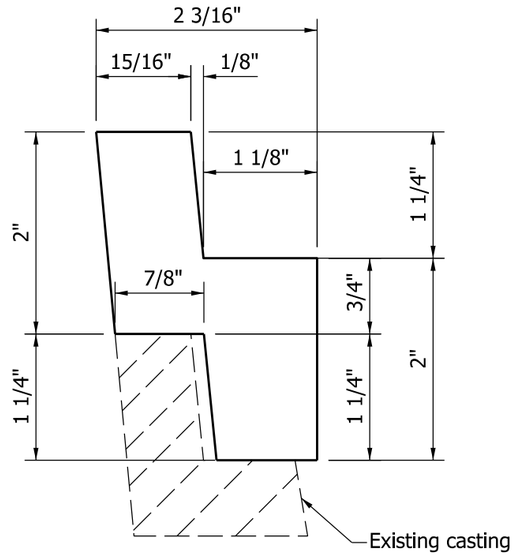

TYPICAL RING PROFILE

INDIANA DEPARTMENT OF TRANSPORTATION

DECK DRAIN TYPE OS OR SQ
ADJUSTING FRAME

SEPTEMBER 2012

STANDARD DRAWING NO. E 704-BDCG-05

RICHARD L. VanCLEAVE
REGISTERED
No. 9750
STATE OF INDIANA
PROFESSIONAL ENGINEER

/s/ Richard L. VanCleave 09/04/12
SUPERVISOR, ROADWAY STANDARDS DATE

/s/ Mark A. Miller 09/04/12
CHIEF ENGINEER DATE

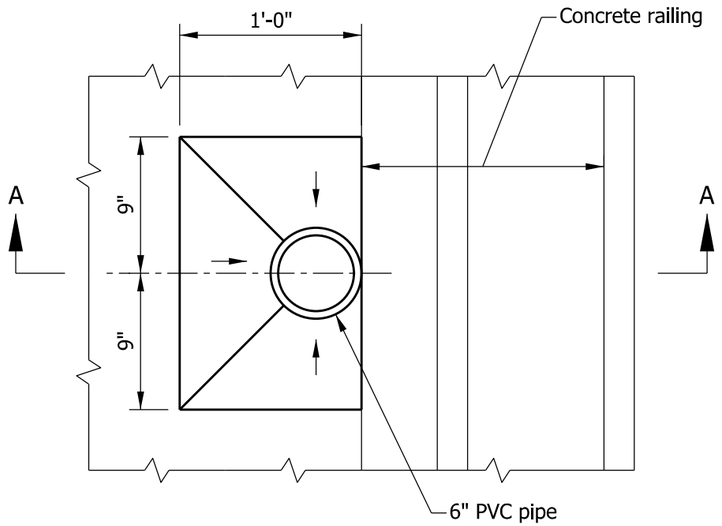

PLAN

NOTE

1. See plans for drain spacing.

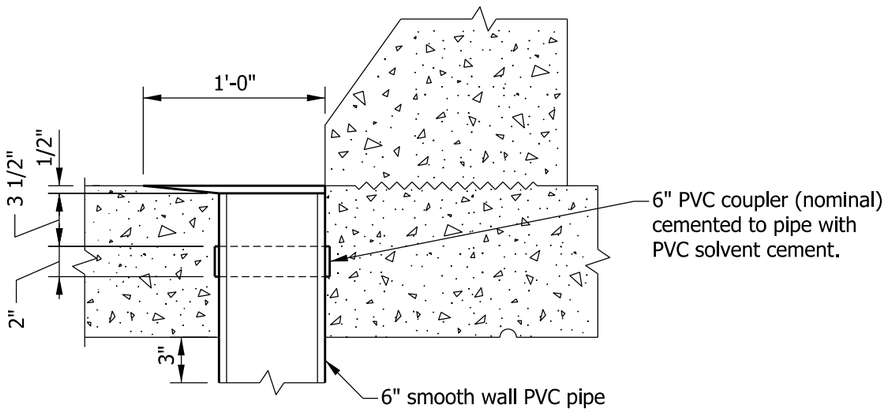

6" SMOOTH WALL PVC PIPE

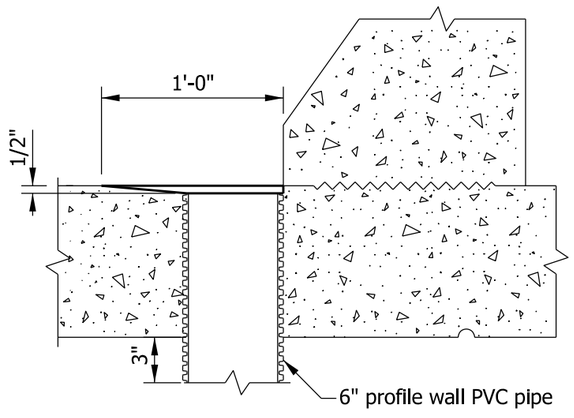

6" PROFILE WALL PVC PIPE

SECTION A-A

INDIANA DEPARTMENT OF TRANSPORTATION

SLAB BRIDGE FLOOR DRAIN
DETAIL

SEPTEMBER 2012

STANDARD DRAWING NO. E 704-SBFD-01

RICHARD L. VanCLEAVE
REGISTERED
No. 9750
STATE OF INDIANA
PROFESSIONAL ENGINEER

/s/ Richard L. Van Cleave 09/04/12
SUPERVISOR, ROADWAY STANDARDS DATE

/s/ Mark A. Miller 09/04/12
CHIEF ENGINEER DATE

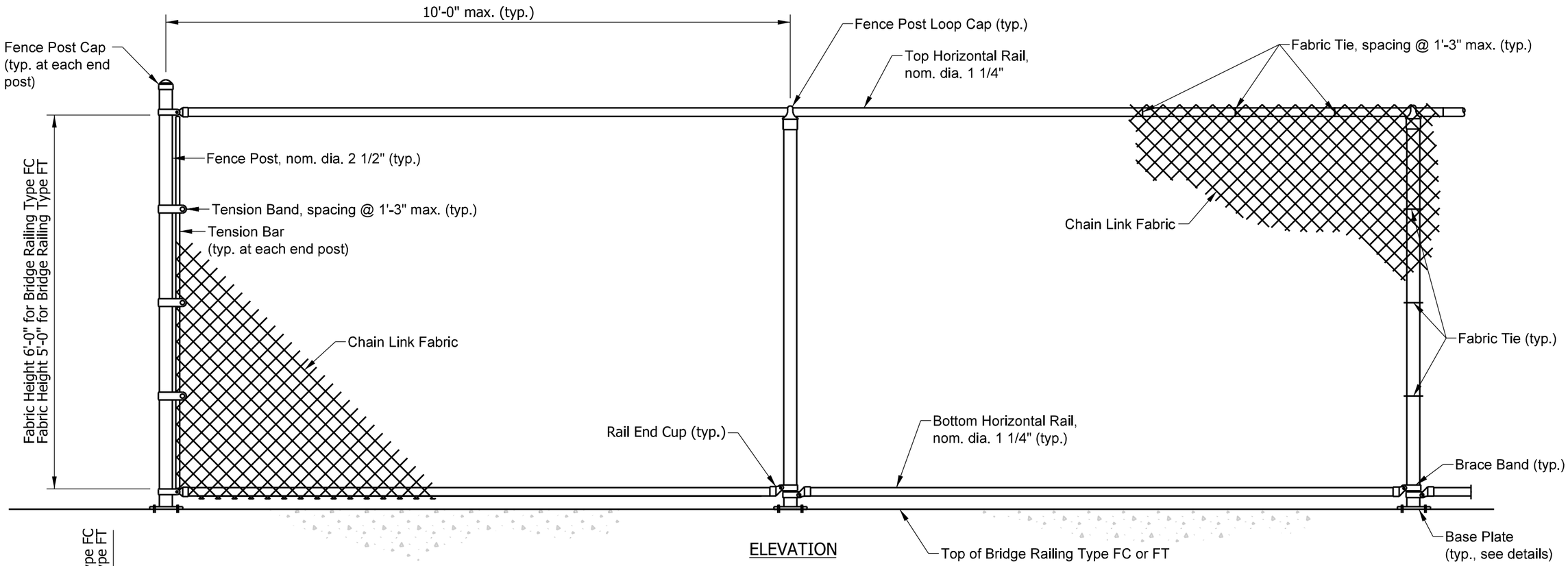

ELEVATION

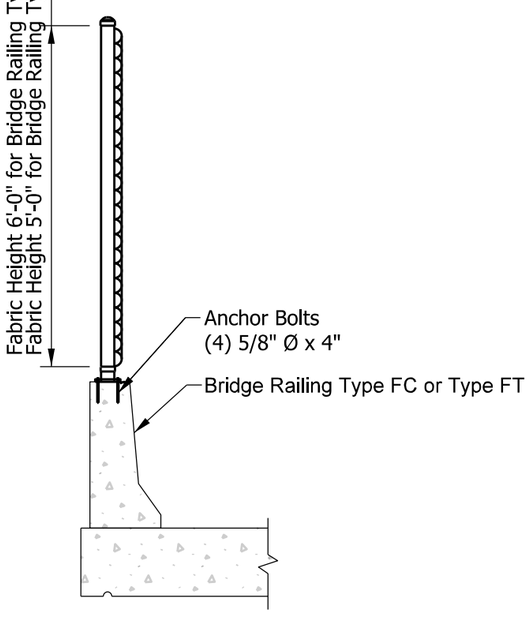

TYPICAL SECTION

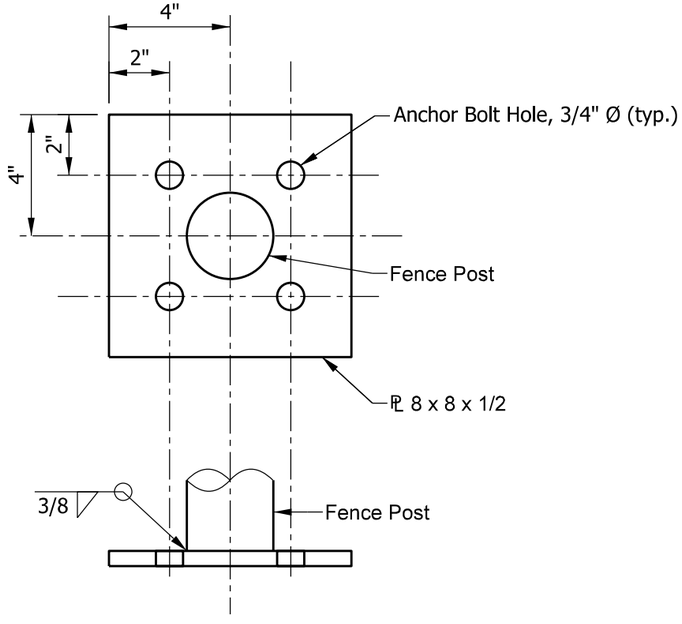

BASE PLATE DETAILS

INDIANA DEPARTMENT OF TRANSPORTATION	
BRIDGE RAILING PEDESTRIAN FENCE SEPTEMBER 2012	
STANDARD DRAWING NO. E 706-BRPF-01	
RICHARD L. VanCLEAVE REGISTERED No. 9750 STATE OF INDIANA PROFESSIONAL ENGINEER	/s/ Richard L. Van Cleave 09/04/12 SUPERVISOR, ROADWAY STANDARDS DATE /s/ Mark A. Miller 09/04/12 CHIEF ENGINEER DATE

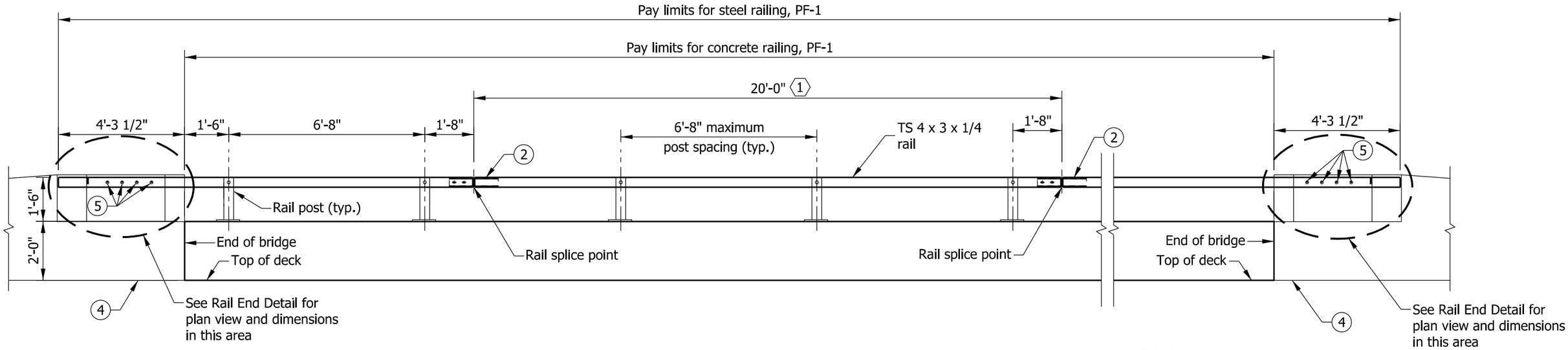

ELEVATION

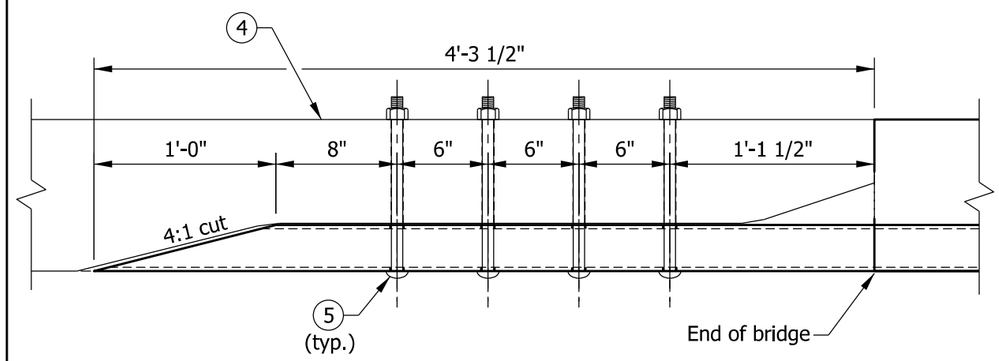

Plan view of TS 4 x 3 x 1/4

RAIL END DETAIL

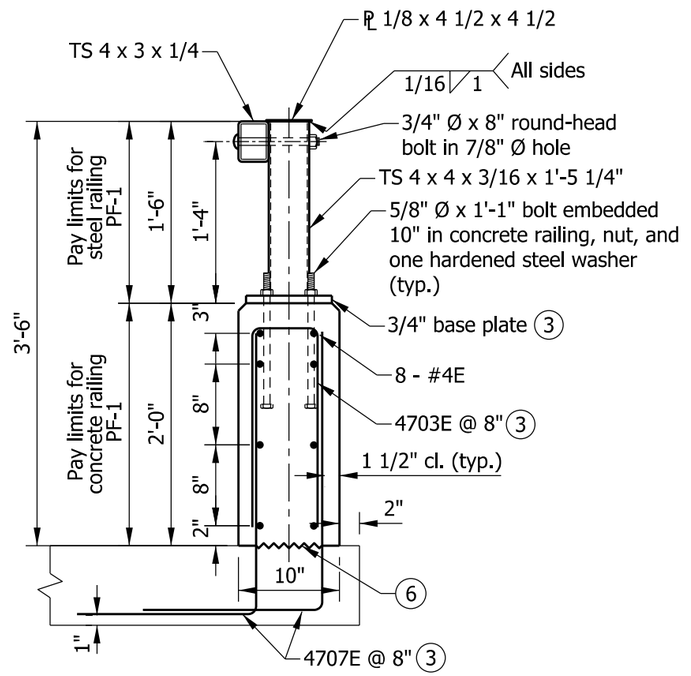

TYPICAL SECTION

QUANTITIES FOR ONE RUNNING FOOT OF RAILING	
Concrete, class C	1.66 CFT
Reinforcing bars	17.0 LBS

NOTES

1. See Standard Drawing E 706-BRPP-06 for General Notes (1).

(2) See Standard Drawing E 706-BRPP-05 for rail tube details and rail splice details.

(3) See Standard Drawing E 706-BRPP-06 for base plate detail and reinforcing-bar bends.

(4) Concrete bridge railing transition, TPF-1. See Standard Drawings E 706-TTPP-01 and -02 for details.

(5) 3/4" Ø x 11 1/2" round-head bolt in 7/8" Ø hole. Hole shall be slotted as required for expansion.

(6) Construction joint type A. See Standard Drawing E 702-CJTA-01 for details.

INDIANA DEPARTMENT OF TRANSPORTATION

RAILING, PF-1

SEPTEMBER 2012

STANDARD DRAWING NO. E 706-BRPP-01

RICHARD L. VanCLEAVE REGISTERED No. 9750 STATE OF INDIANA PROFESSIONAL ENGINEER

/s/ Richard L. VanCleave 09/04/12
SUPERVISOR, ROADWAY STANDARDS DATE

/s/ Mark A. Miller 09/04/12
CHIEF ENGINEER DATE

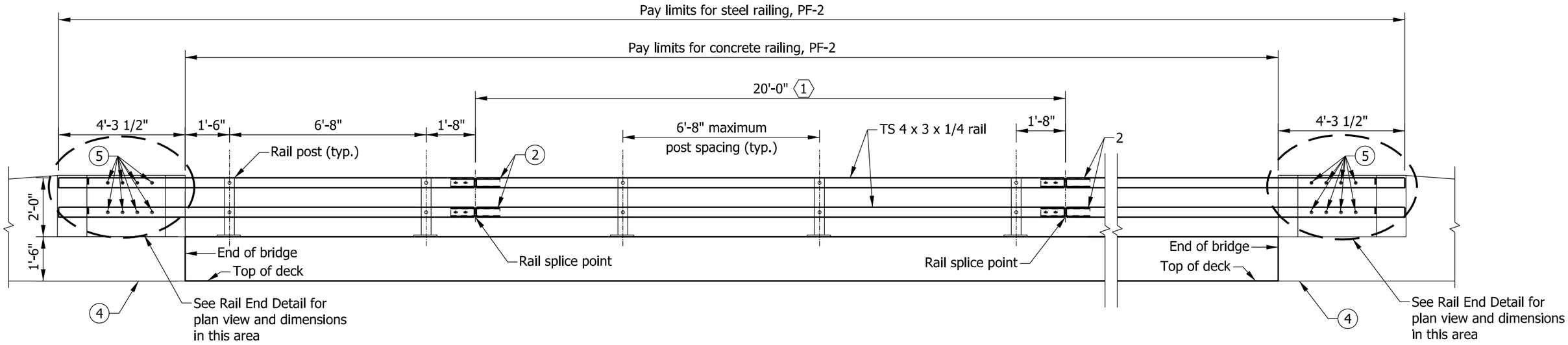

ELEVATION

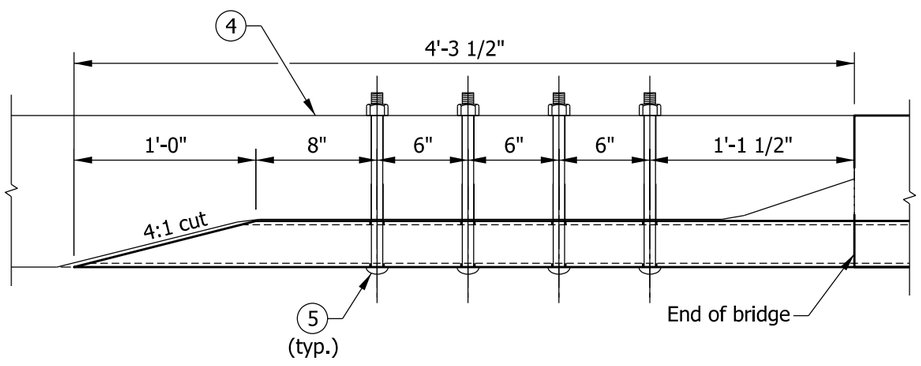

Plan view of TS 4 x 3 x 1/4

RAIL END DETAIL

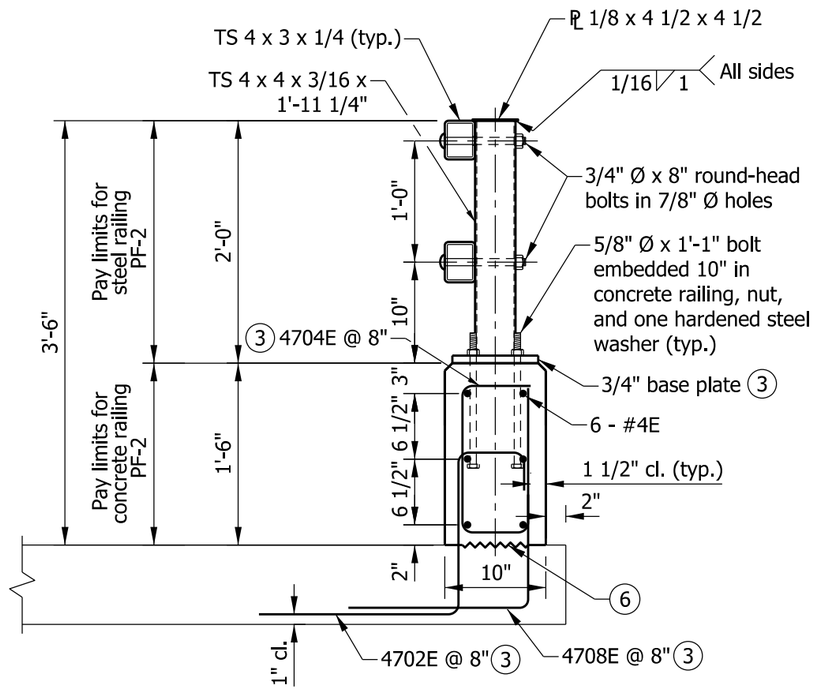

TYPICAL SECTION

QUANTITIES FOR ONE RUNNING FOOT OF RAILING	
Concrete, class C	1.25 CFT
Reinforcing bars	14.1 LBS

NOTES

1. See Standard Drawing E 706-BRPP-06 for General Notes (hex).

(2) See Standard Drawing E 706-BRPP-05 for rail tube details and rail splice details.

(3) See Standard Drawing E 706-BRPP-06 for base plate detail and reinforcing-bar bends.

(4) Concrete bridge railing transition, TPF-2. See Standard Drawings E 706-TTPP-03 and -04 for details.

(5) 3/4" Ø x 11 1/2" round-head bolt in 7/8" Ø hole. Hole shall be slotted as required for expansion.

(6) Construction joint type A. See Standard Drawing E 702-CJTA-01 for details.

INDIANA DEPARTMENT OF TRANSPORTATION

RAILING, PF-2

SEPTEMBER 2012

STANDARD DRAWING NO. E 706-BRPP-02

RICHARD L. VanCLEAVE REGISTERED No. 9750 STATE OF INDIANA PROFESSIONAL ENGINEER

/s/ Richard L. VanCleave 09/04/12
SUPERVISOR, ROADWAY STANDARDS DATE

/s/ Mark A. Miller 09/04/12
CHIEF ENGINEER DATE

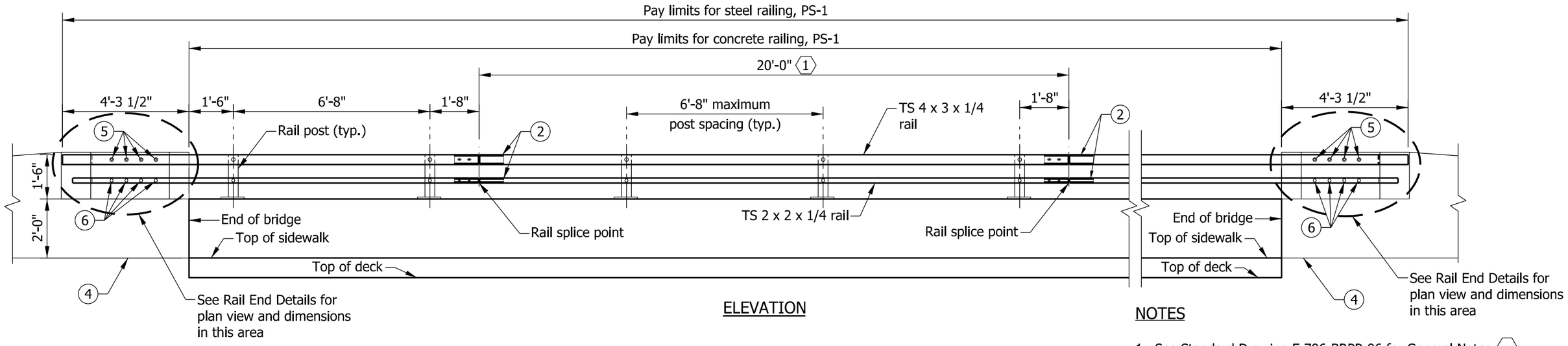

ELEVATION

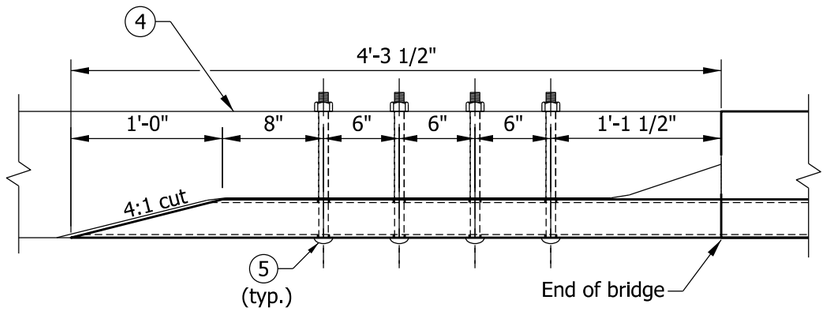

Plan view of TS 4 X 3 X 1/4

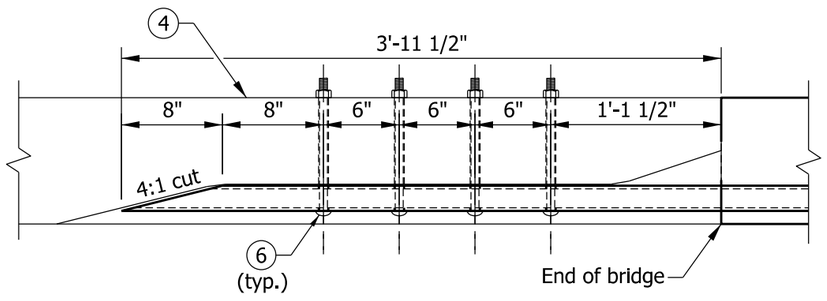

Plan view of TS 2 x 2 x 1/4

RAIL END DETAILS

QUANTITIES FOR ONE RUNNING FOOT OF RAILING	
Concrete, class C	2.30 CFT
Reinforcing bars	19.6 LBS

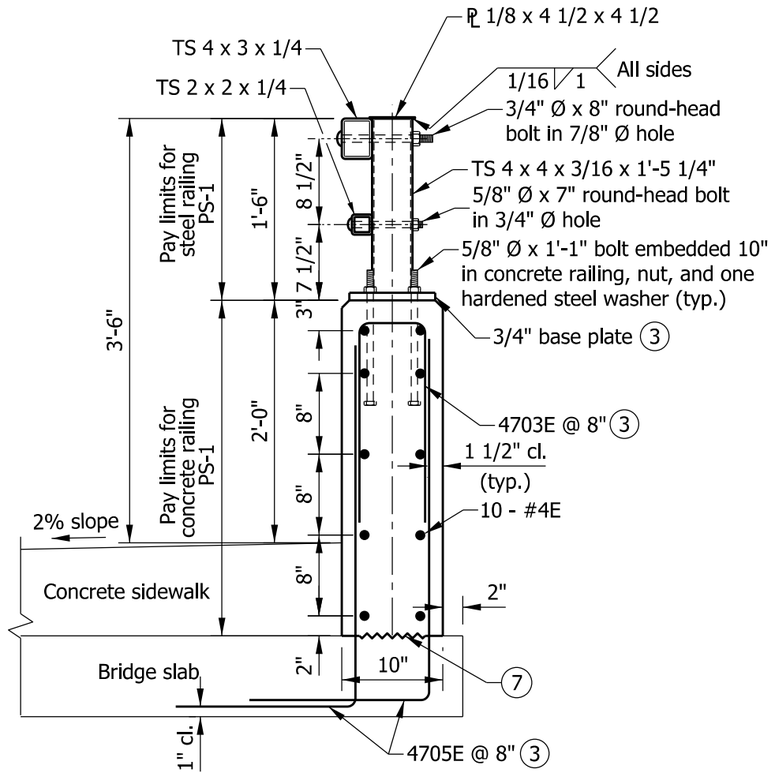

TYPICAL SECTION

NOTES

1. See Standard Drawing E 706-BRPP-06 for General Notes (hexagon).
2. See Standard Drawing E 706-BRPP-05 for rail tube details and rail splice details.
3. See Standard Drawing E 706-BRPP-06 for base plate detail and reinforcing-bar bends.
4. Concrete bridge railing transition, TPS-1. See Standard Drawings E 706-TTPP-05 and -06 for details.
5. 3/4" Ø x 11 1/2" round-head bolt in 7/8" Ø hole. Hole shall be slotted as required for expansion.
6. 5/8" Ø x 10 1/2" round-head bolt in 3/4" Ø hole. Hole shall be slotted as required for expansion.
7. Construction joint type A. See Standard Drawing E 702-CJTA-01 for details.

INDIANA DEPARTMENT OF TRANSPORTATION

RAILING, PS-1

SEPTEMBER 2012

STANDARD DRAWING NO. E 706-BRPP-03

RICHARD L. VanCLEAVE REGISTERED No. 9750 STATE OF INDIANA PROFESSIONAL ENGINEER

/s/ Richard L. VanCleave 09/04/12
SUPERVISOR, ROADWAY STANDARDS DATE

/s/ Mark A. Miller 09/04/12
CHIEF ENGINEER DATE

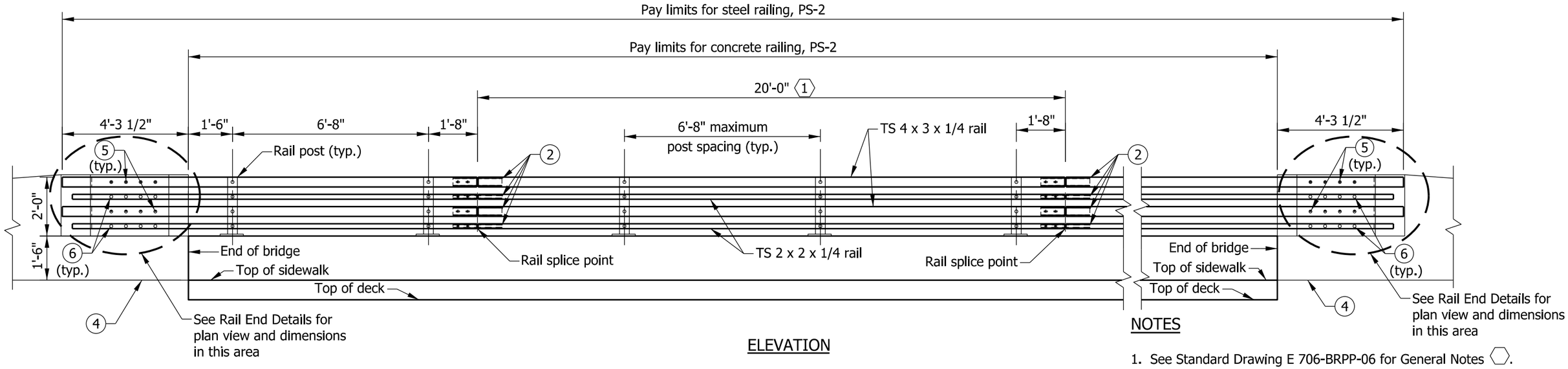

ELEVATION

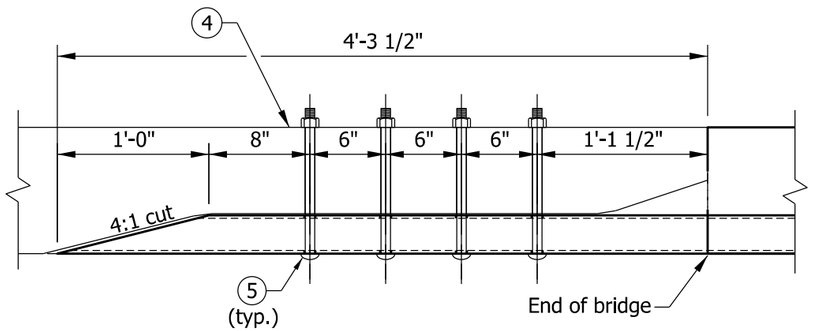

Plan view of TS 4 X 3 X 1/4

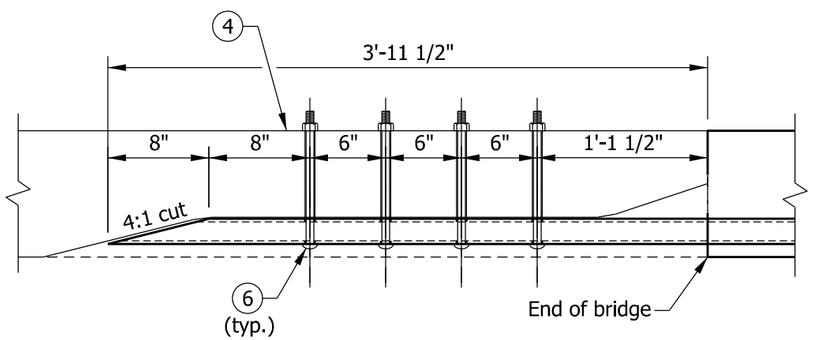

Plan view of TS 2 x 2 x 1/4

RAIL END DETAILS

QUANTITIES FOR ONE RUNNING FOOT OF RAILING	
Concrete, class C	1.89 CFT
Reinforcing bars	16.8 LBS

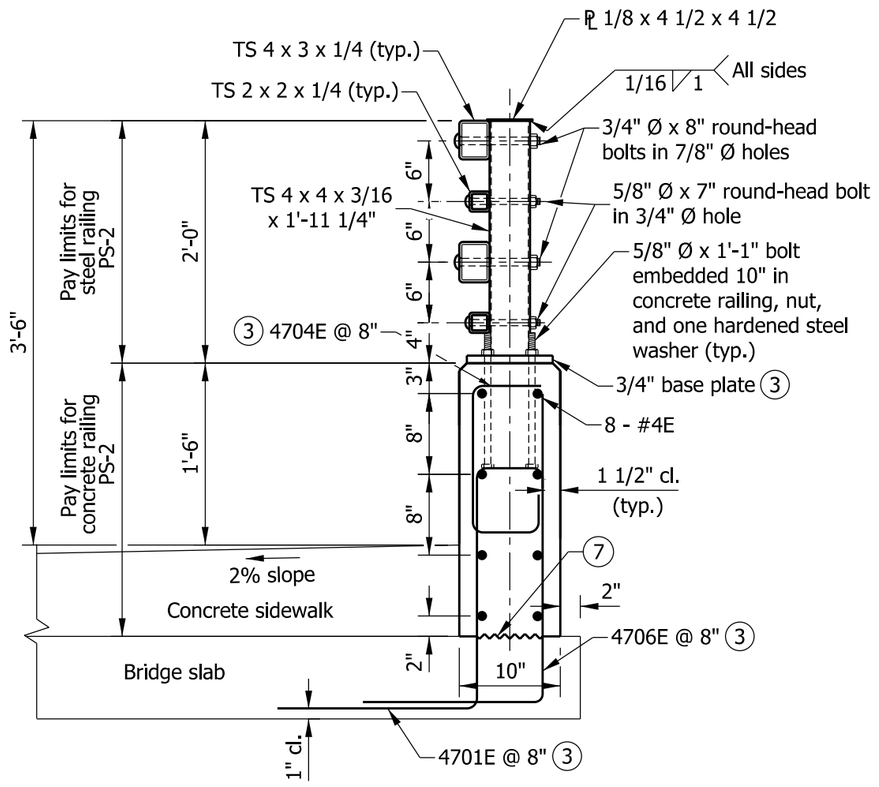

TYPICAL SECTION

NOTES

1. See Standard Drawing E 706-BRPP-06 for General Notes (1).
2. See Standard Drawing E 706-BRPP-05 for rail tube details and rail splice details.
3. See Standard Drawing E 706-BRPP-06 for base plate detail and reinforcing-bar bends.
4. Concrete bridge railing transition, TPS-2. See Standard Drawings E 706-TTPP-07 and -08 for details.
5. 3/4" Ø x 11 1/2" round-head bolt in 7/8" Ø hole. Hole shall be slotted as required for expansion.
6. 5/8" Ø x 10 1/2" round-head bolt in 3/4" Ø hole. Hole shall be slotted as required for expansion.
7. Construction joint type A. See Standard Drawing E 702-CJTA-01 for details.

INDIANA DEPARTMENT OF TRANSPORTATION

RAILING, PS-2

SEPTEMBER 2012

STANDARD DRAWING NO. E 706-BRPP-04

RICHARD L. VanCLEAVE REGISTERED No. 9750 STATE OF INDIANA PROFESSIONAL ENGINEER

/s/ Richard L. VanCleave 09/04/12
SUPERVISOR, ROADWAY STANDARDS DATE

/s/ Mark A. Miller 09/04/12
CHIEF ENGINEER DATE

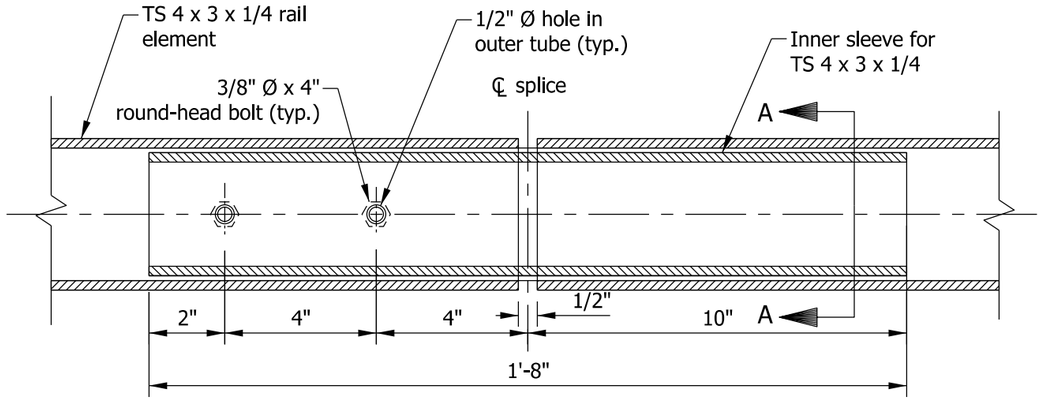

SPLICE ASSEMBLY
FOR TS 4 X 3 X 1/4 RAIL

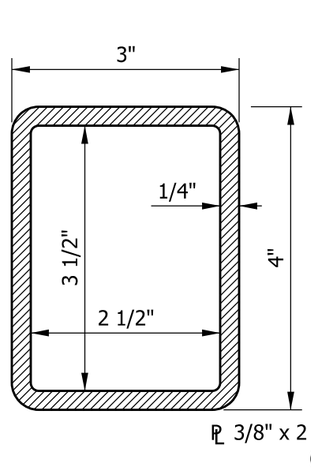

TS 4 x 3 x 1/4

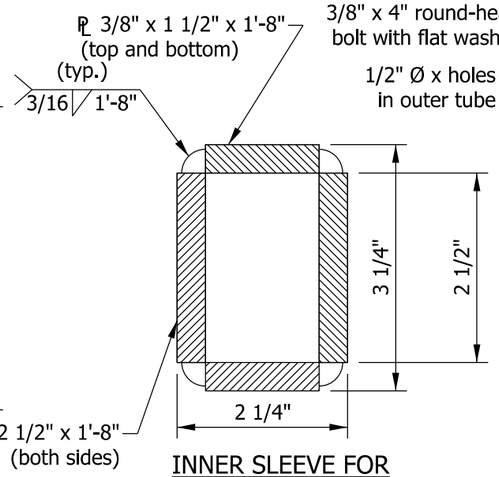

INNER SLEEVE FOR
TS 4 x 3 x 1/4

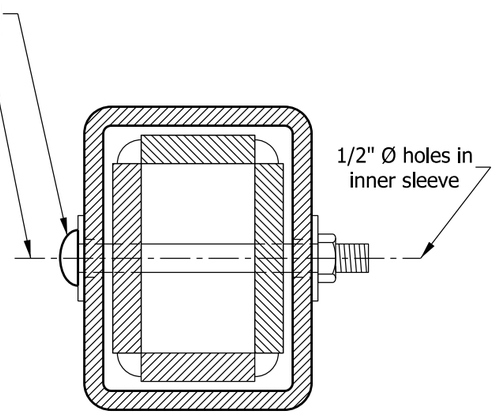

SECTION A-A

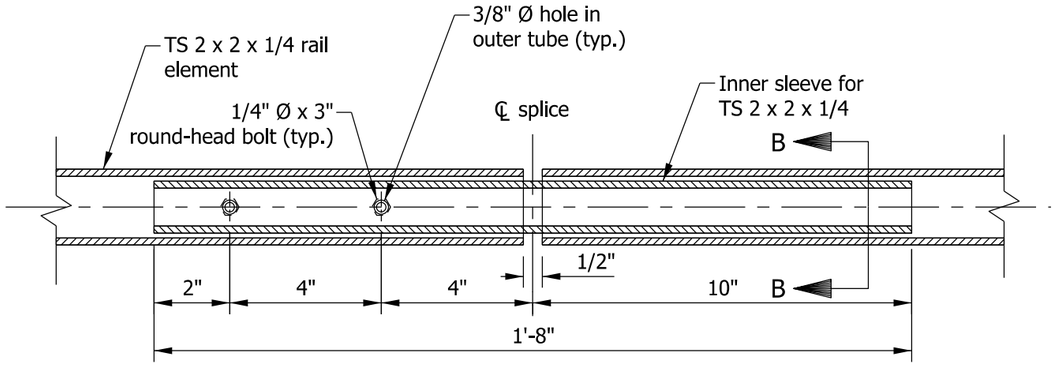

SPLICE ASSEMBLY
FOR TS 2 X 2 X 1/4 RAIL

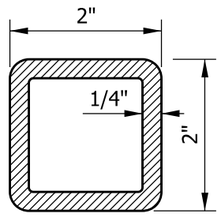

TS 2 x 2 x 1/4

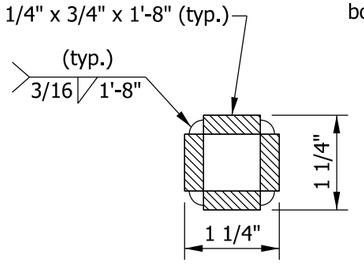

INNER SLEEVE FOR
TS 2 x 2 x 1/4

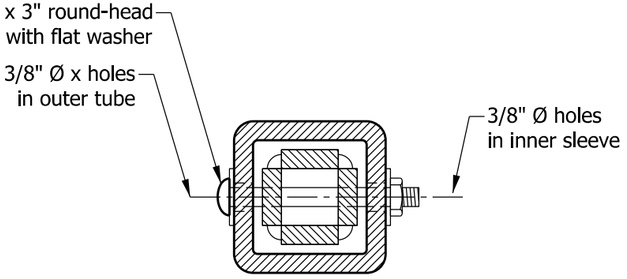

SECTION B-B

INDIANA DEPARTMENT OF TRANSPORTATION

RAILING, PF AND PS
RAIL SPLICE DETAILS

SEPTEMBER 2012

STANDARD DRAWING NO. E 706-BRPP-05

RICHARD L. VanCLEAVE REGISTERED No. 9750 STATE OF INDIANA PROFESSIONAL ENGINEER

/s/ Richard L. VanCleave 09/04/12
SUPERVISOR, ROADWAY STANDARDS DATE

/s/ Mark A. Miller 09/04/12
CHIEF ENGINEER DATE

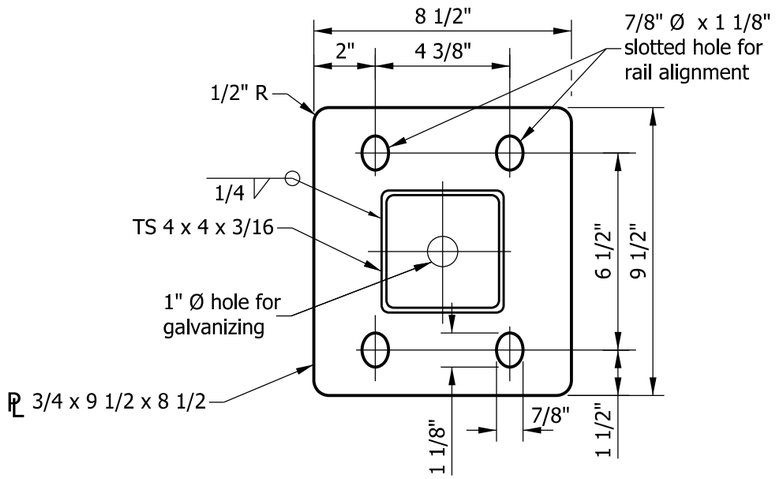

BASE PLATE DETAIL

GENERAL NOTES

1. Intermediate railing splices shall be placed every 20 ft.
2. See Standard Drawing E 703-BRST-01 for reinforcing-bar bending details and notes.
3. All chamfered edges shall be 3/4".
4. All reinforcing bars designated E shall be epoxy coated.

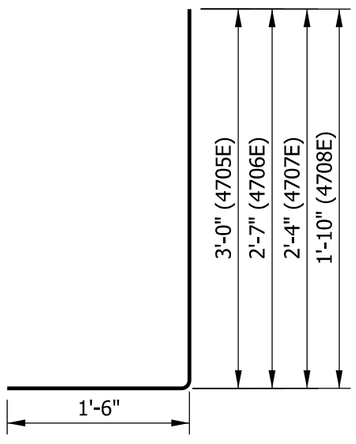

4705E x 4'-6"
4706E x 4'-1"
4707E x 3'-10"
4708E x 3'-4"

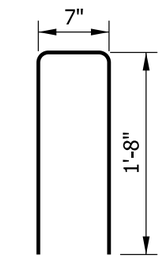

4703E x 3'-11"

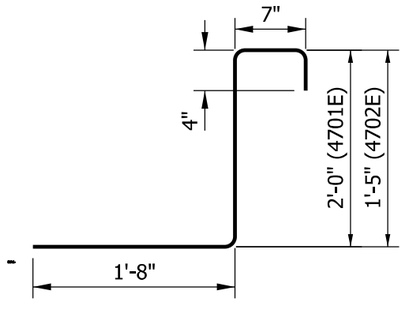

4701E x 4'-7"
4702E x 4'-0"

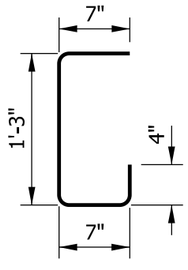

4704E x 2'-9"

INDIANA DEPARTMENT OF TRANSPORTATION

RAILING, PF & PS
DETAILS

SEPTEMBER 2012

STANDARD DRAWING NO. E 706-BRPP-06

RICHARD L. VanCLEAVE REGISTERED No. 9750 STATE OF INDIANA PROFESSIONAL ENGINEER

/s/ Richard L. VanCleave 09/04/12
SUPERVISOR, ROADWAY STANDARDS DATE

/s/ Mark A. Miller 09/04/12
CHIEF ENGINEER DATE

NOTES

1. See Standard Drawing E 706-BRSF-03 for General Notes ⬡.
2. See Standard Drawing E 703-BRST-01 for reinforcing-bar bending details and notes.

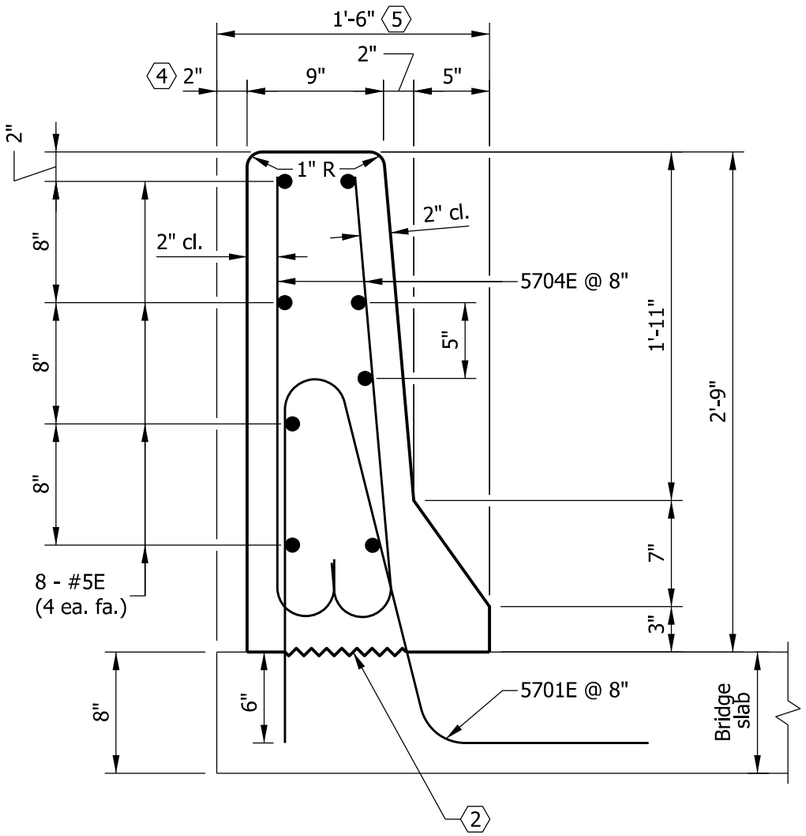

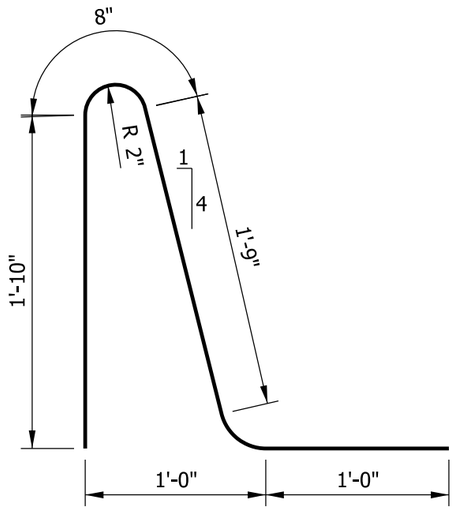

5701E x 5'-6"

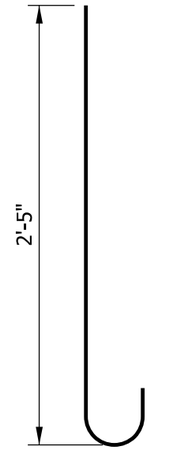

5704E x 4'-0"

QUANTITIES FOR ONE RUNNING FOOT OF RAILING	
Concrete, class C	2.58 CFT
Reinforcing bars	26.3 LBS

INDIANA DEPARTMENT OF TRANSPORTATION

BRIDGE RAILING
TYPE FC

SEPTEMBER 2012

STANDARD DRAWING NO. E 706-BRSF-01

RICHARD L. VanCLEAVE
REGISTERED
No. 9750
STATE OF INDIANA
PROFESSIONAL ENGINEER

/s/ Richard L. VanCleave 09/04/12
SUPERVISOR, ROADWAY STANDARDS DATE

/s/ Mark A. Miller 09/04/12
CHIEF ENGINEER DATE

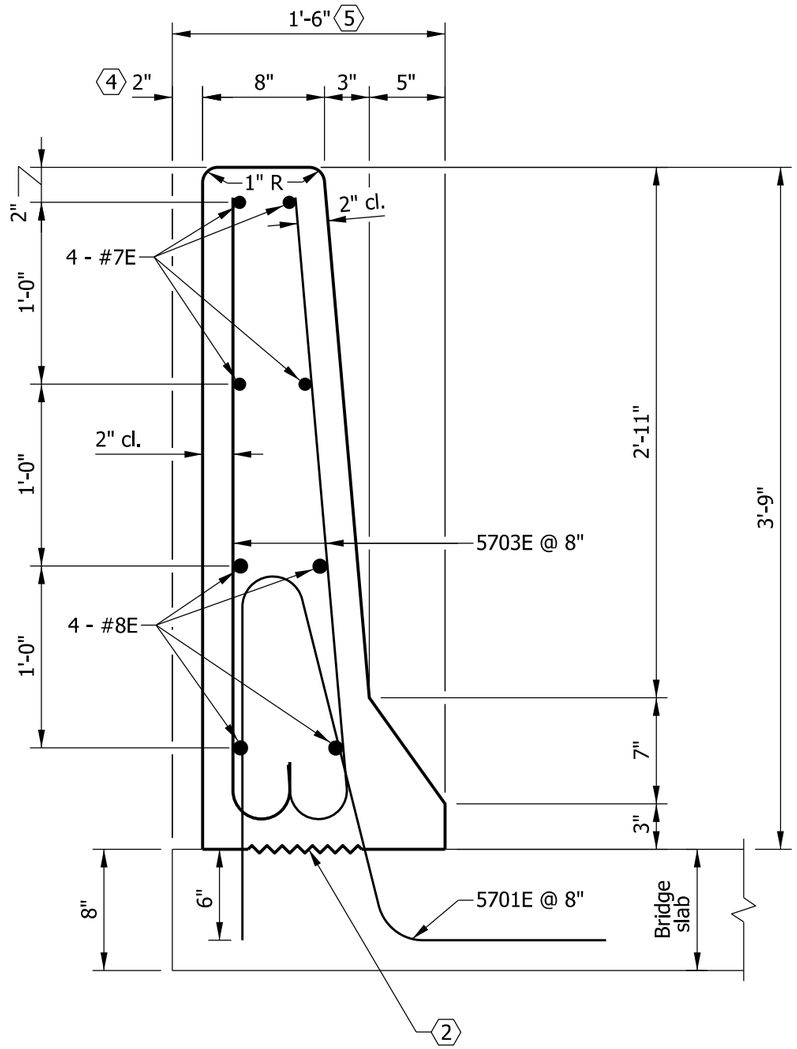

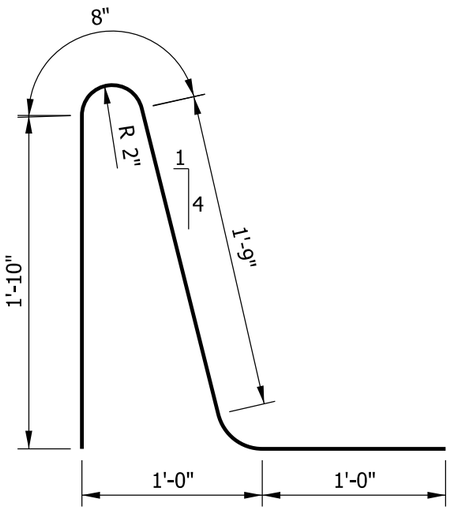

5701E x 5'-6"

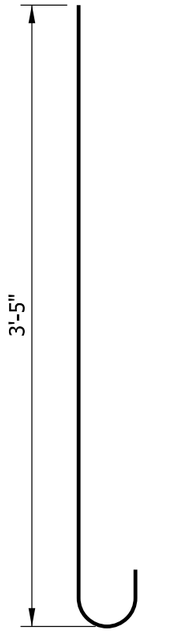

5703E x 4'-0"

NOTES

1. See Standard Drawing E 706-BRSF-03 for General Notes 6.
2. See Standard Drawing E 703-BRST-01 for reinforcing-bar bending details and notes.

QUANTITIES FOR ONE RUNNING FOOT OF RAILING	
Concrete, class C	3.29 CFT
Reinforcing bars	40.0 LBS

INDIANA DEPARTMENT OF TRANSPORTATION

BRIDGE RAILING TYPE FT

SEPTEMBER 2012

STANDARD DRAWING NO. E 706-BRSF-02

RICHARD L. VanCLEAVE REGISTERED No. 9750 STATE OF INDIANA PROFESSIONAL ENGINEER

/s/ Richard L. VanCleave 09/04/12
SUPERVISOR, ROADWAY STANDARDS DATE

/s/ Mark A. Miller 09/04/12
CHIEF ENGINEER DATE

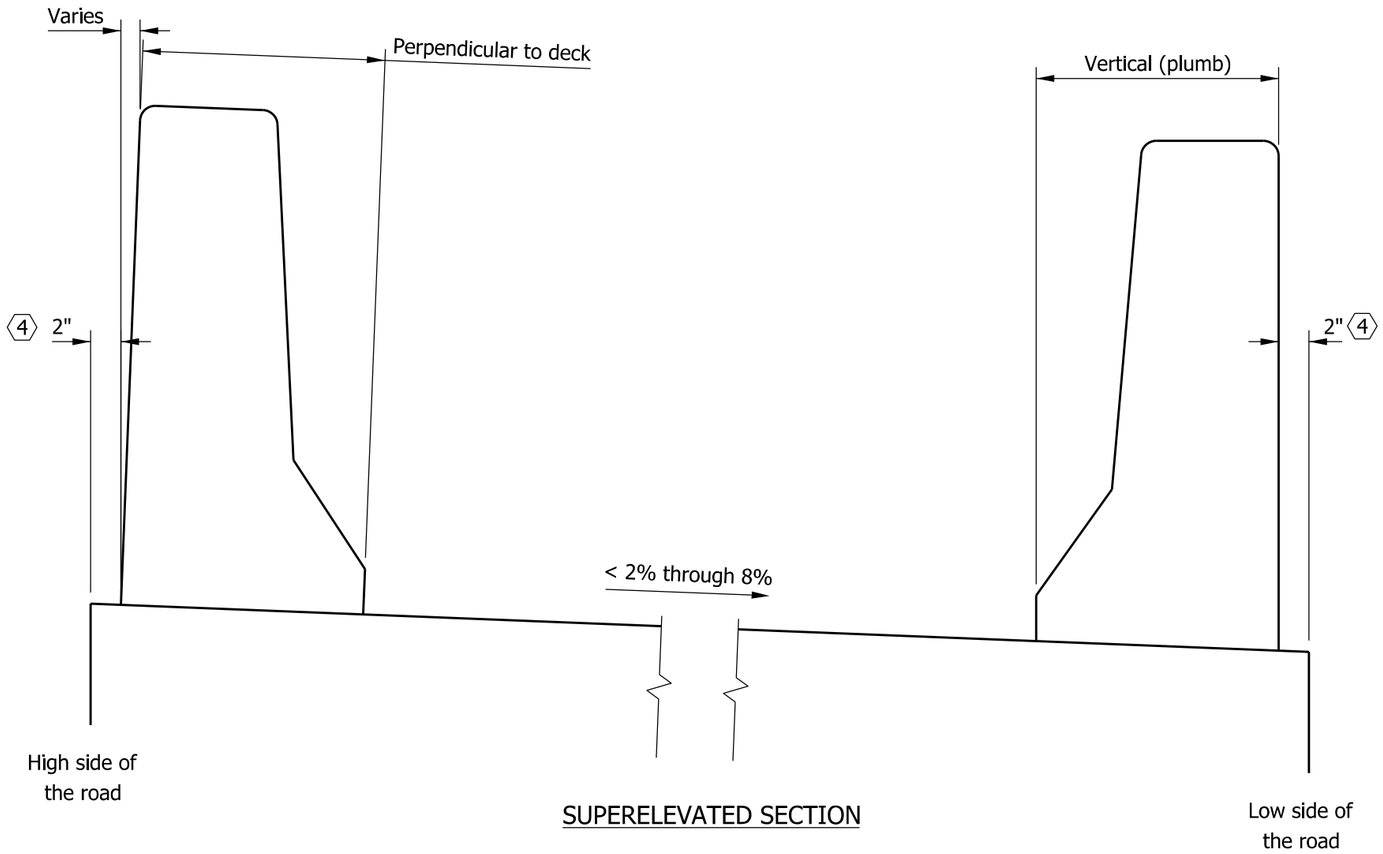

SUPERELEVATED SECTION

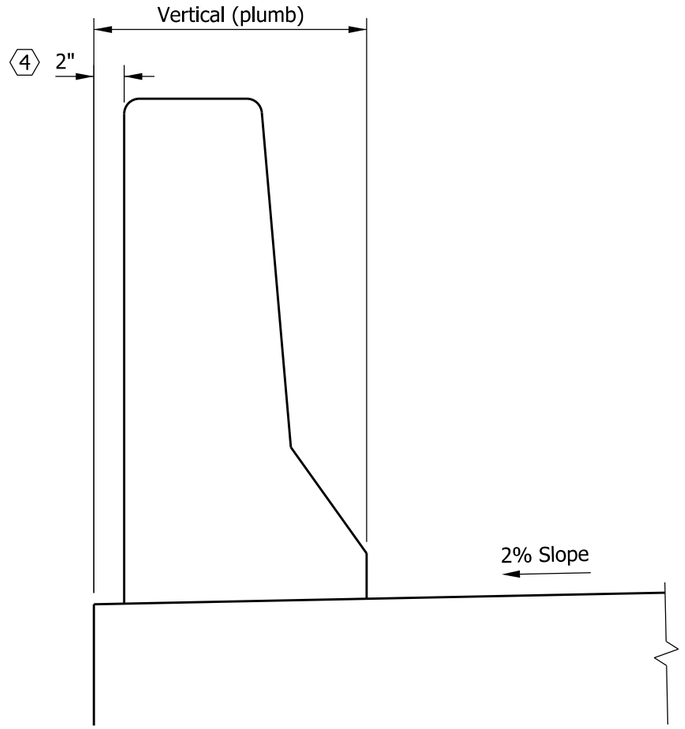

CROWN SECTION

GENERAL NOTES

1. Minimum lap for #5 bars shall be 1'-11".

〈2〉 Construction joint type A. See Standard Drawing E 702-CJTA-01 for details.

3. A joint shall be provided between the bridge railing and railing transition at the end of the bridge slab as shown on Standard Drawing E 706-CBRT-01.

〈4〉 For twin structures or other structures which are placed side by side, this dimension shall be reduced to 0 on the median side.

〈5〉 For twin structures or other structures which are placed side by side, this dimension shall be reduced to 1'-4" on the median side.

6. All reinforcing bars designated E shall be epoxy coated.

INDIANA DEPARTMENT OF TRANSPORTATION

CONCRETE BRIDGE RAILING PLACEMENT

SEPTEMBER 2012

STANDARD DRAWING NO. E 706-BRSF-03

RICHARD L. VanCLEAVE REGISTERED No. 9750 STATE OF INDIANA PROFESSIONAL ENGINEER

/s/ Richard L. VanCleave 09/04/12
SUPERVISOR, ROADWAY STANDARDS DATE

/s/ Mark A. Miller 09/04/12
CHIEF ENGINEER DATE

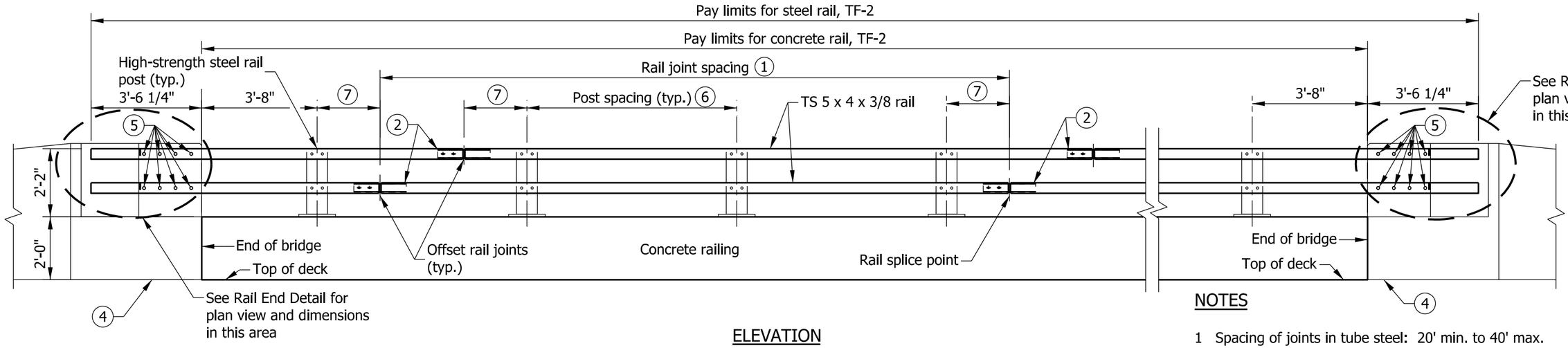

ELEVATION

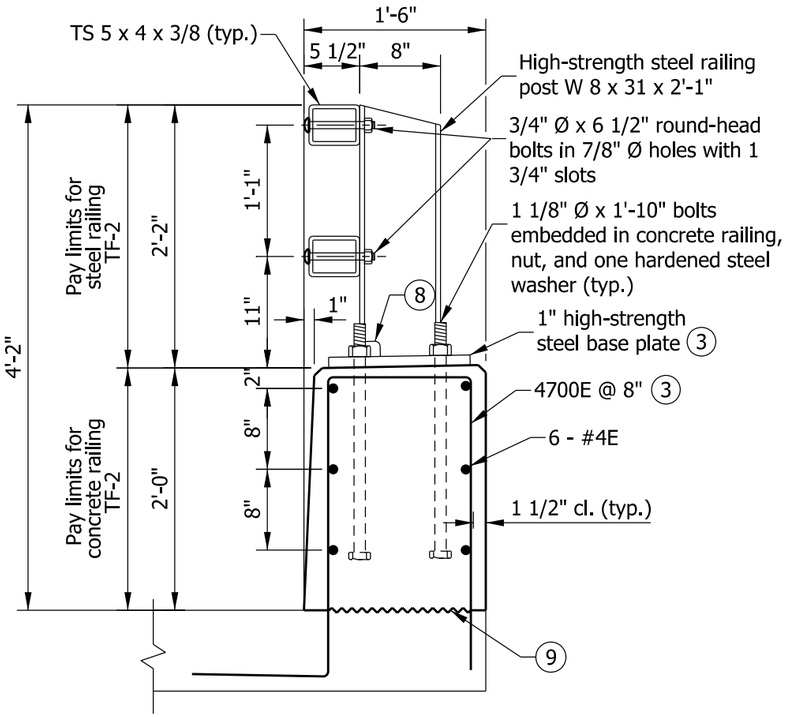

TYPICAL SECTION

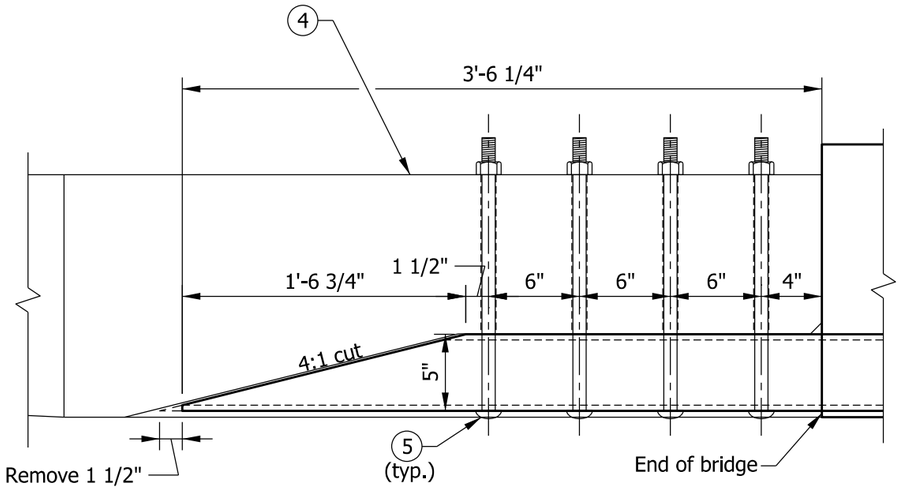

RAIL END DETAIL
(Plan view of both TS 5 x 4 x 3/8 rails)

QUANTITIES FOR ONE RUNNING FOOT OF RAILING	
Concrete, class C	2.92 CFT
Reinforcing bars	11.0 LBS

NOTES

1 Spacing of joints in tube steel: 20' min. to 40' max.

(2) See Standard Drawing E 706-BRTF-02 for railing tube details and rail splice details.

(3) See Standard Drawing E 706-BRTF-03 for base plate details and reinforcing-bar bends.

(4) Concrete bridge railing transition type TTF-2. See Standard Drawings E 706-TTTF-01 through -04 for details.

(5) 7/8" Ø x 1'-6" round-head bolt in 1" Ø hole. Hole is to be slotted as required for expansion.

(6) Spacing of rail posts: 4'-0" min. to 7'-6" max.

(7) Distance from centerline of rail splice to centerline of rail post: 18" min. to 30" max.

(8) Weld-access hole. See Standard Drawing E 706-BRTF-03 for detail.

(9) Construction joint type A. See Standard Drawing E 702-CJTA-01 for details.

INDIANA DEPARTMENT OF TRANSPORTATION

RAILING, TF-2

SEPTEMBER 2012

STANDARD DRAWING NO. E 706-BRTF-01

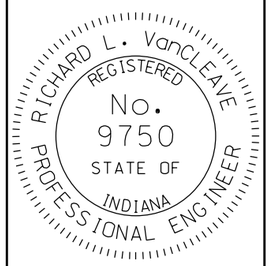

/s/ Richard L. VanCleave 09/04/12
SUPERVISOR, ROADWAY STANDARDS DATE

/s/ Mark A. Miller 09/04/12
CHIEF ENGINEER DATE

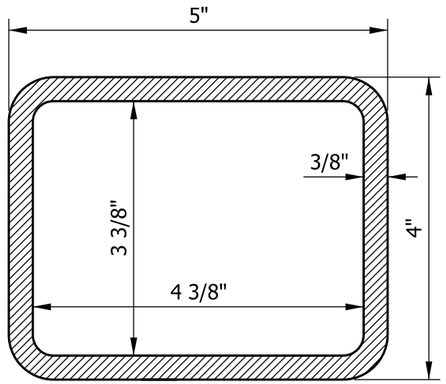

TS 5 x 4 x 3/8

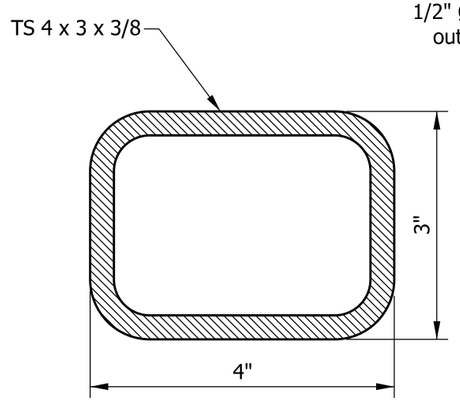

INNER TUBE FOR
TS 5 x 4 x 3/8

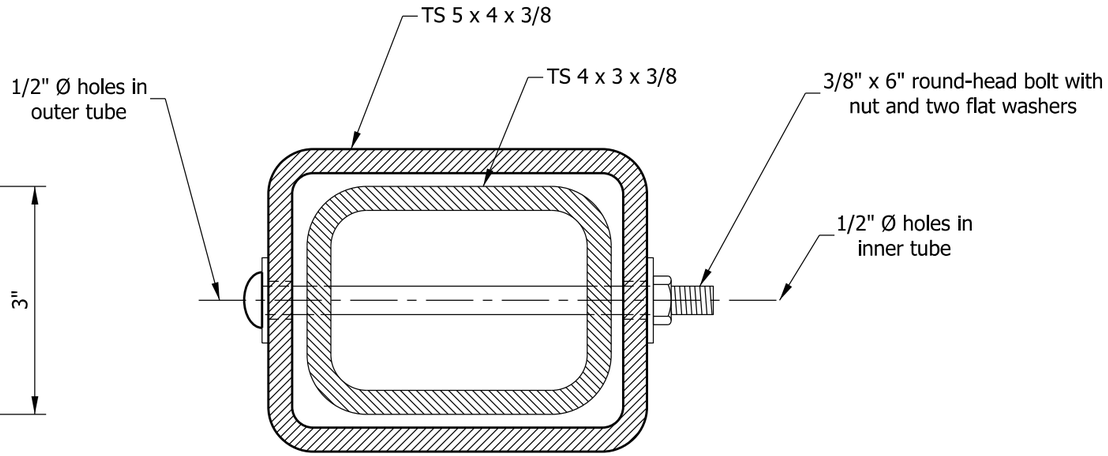

SECTION A-A

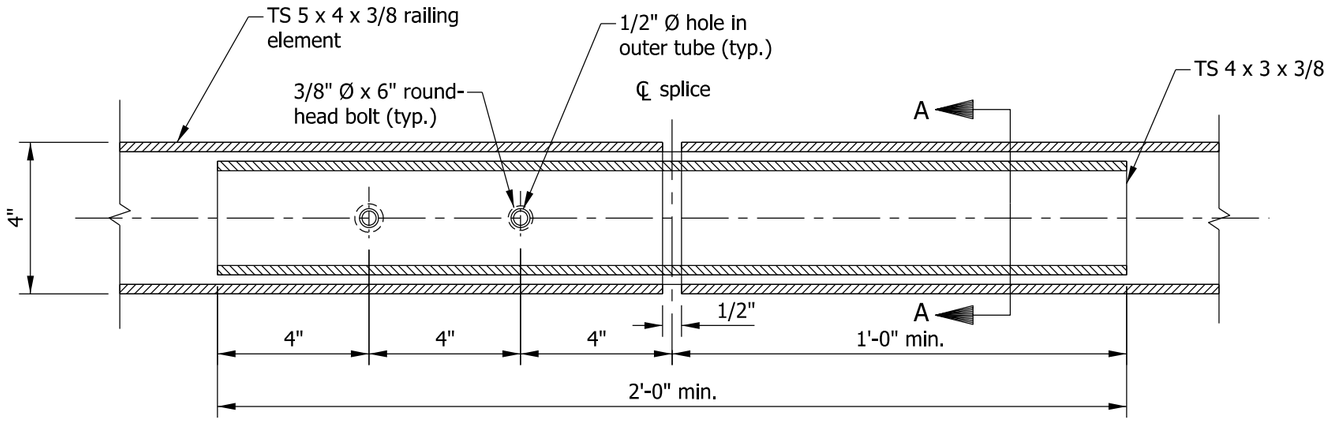

SPLICE ASSEMBLY
FOR TS 5 X 4 X 3/8 RAIL

INDIANA DEPARTMENT OF TRANSPORTATION

RAILING, TF-2
RAIL SPLICE DETAILS

SEPTEMBER 2012

STANDARD DRAWING NO. E 706-BRTF-02

RICHARD L. VanCLEAVE
REGISTERED
No. 9750
STATE OF INDIANA
PROFESSIONAL ENGINEER

/s/ Richard L. VanCleave 09/04/12
SUPERVISOR, ROADWAY STANDARDS DATE

/s/ Mark A. Miller 09/04/12
CHIEF ENGINEER DATE

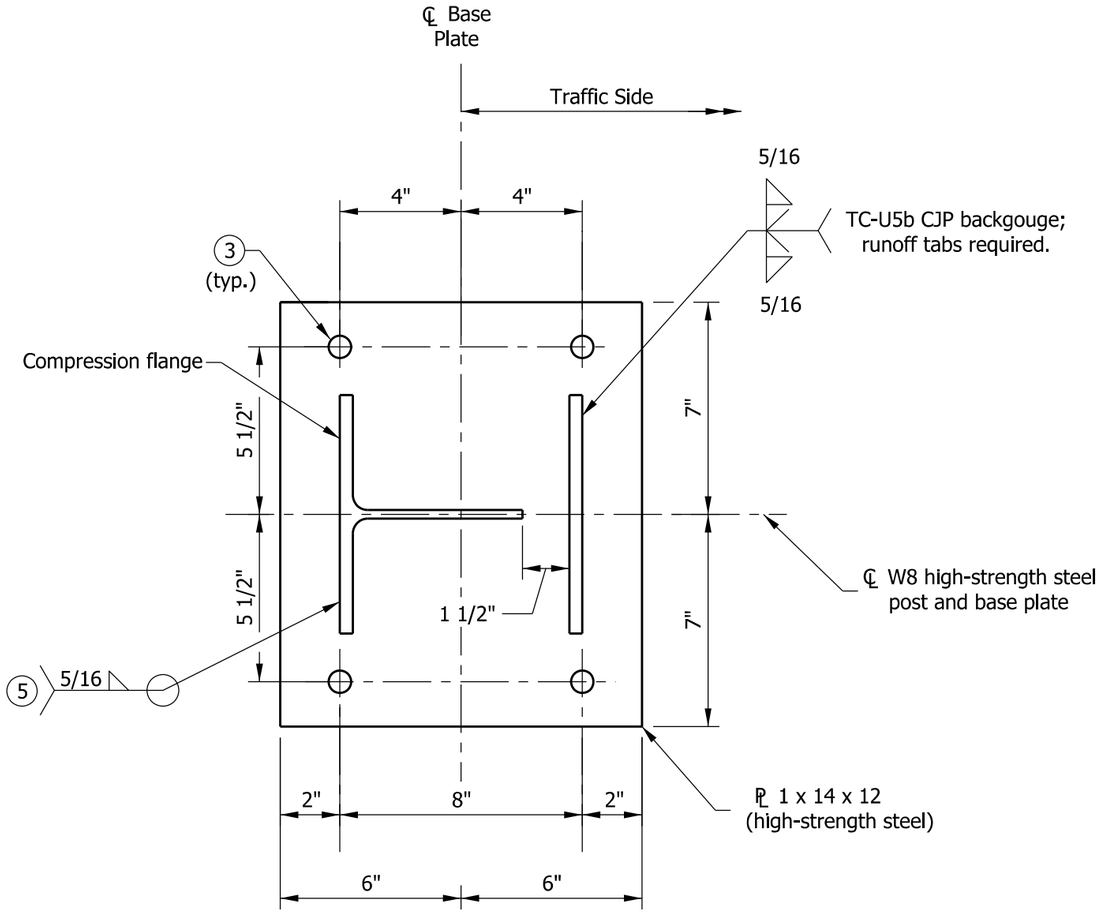

BASE PLATE DETAIL

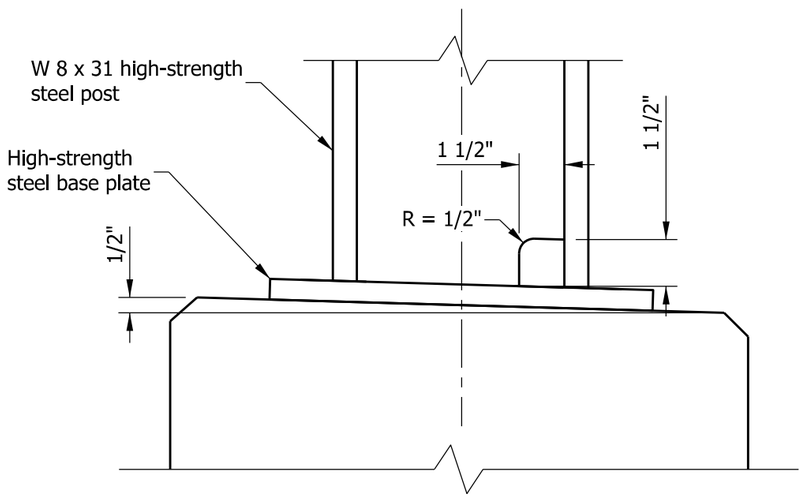

WELD-ACCESS HOLE DETAIL

NOTES

1. See Standard Drawing E 703-BRST-01 for reinforcing-bar bending details and notes.
2. All chamfered edges shall be 3/4".

(3) 1 3/8" Ø holes for 1 1/8" anchor bolts.

4. All reinforcing bars designated E shall be epoxy coated.

(5) Mill to bear flush with base plate prior to welding to ensure that the final position of the post is vertical.

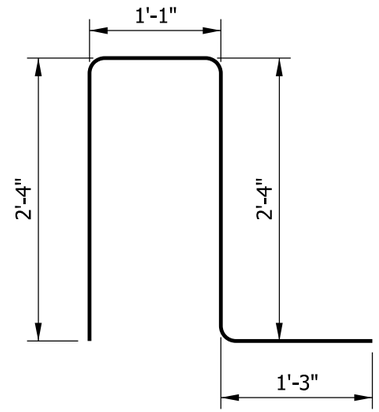

4700E x 7'-0"

INDIANA DEPARTMENT OF TRANSPORTATION

RAILING, TF-2
DETAILS

SEPTEMBER 2012

STANDARD DRAWING NO. E 706-BRTF-03

RICHARD L. VanCLEAVE REGISTERED No. 9750 STATE OF INDIANA PROFESSIONAL ENGINEER

/s/ Richard L. VanCleave 09/04/12
SUPERVISOR, ROADWAY STANDARDS DATE

/s/ Mark A. Miller 09/04/12
CHIEF ENGINEER DATE

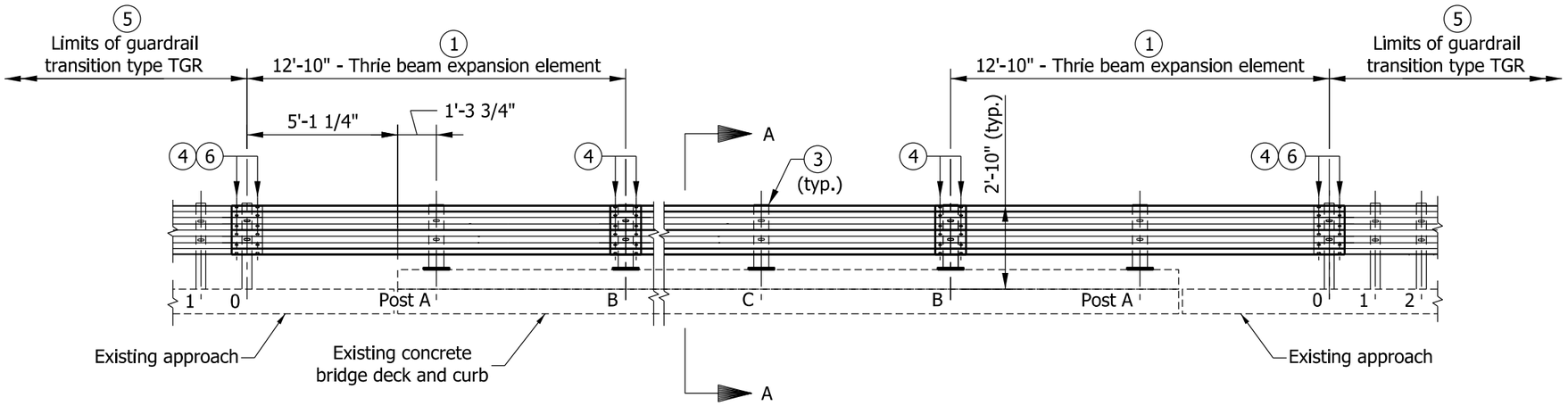

ELEVATION VIEW

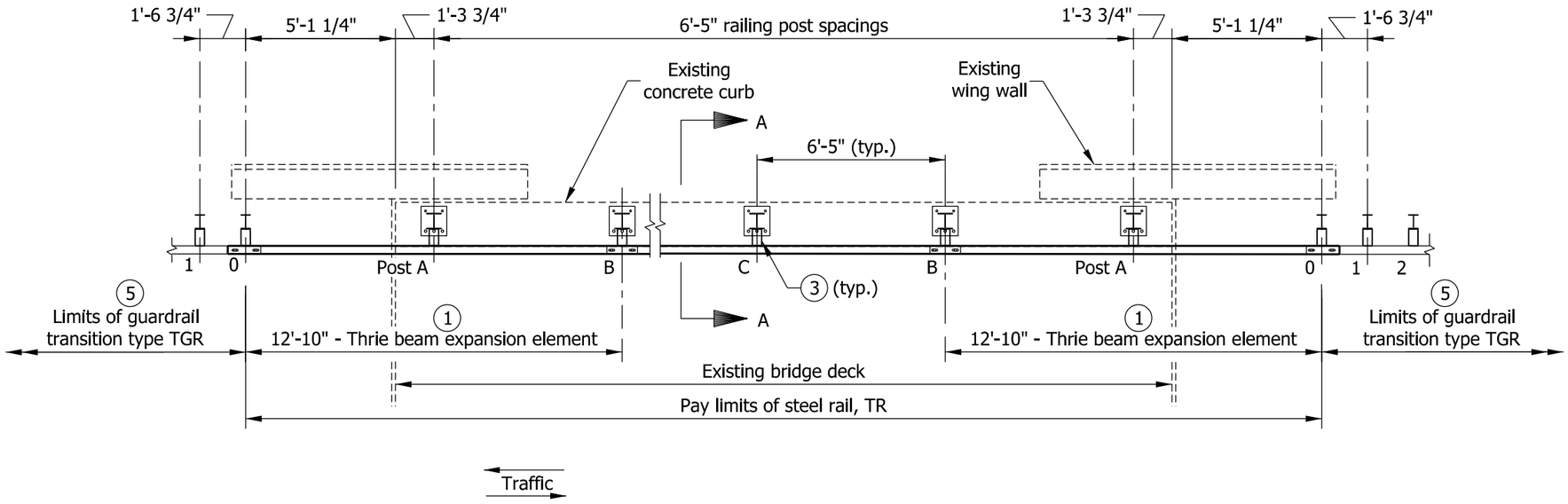

PLAN VIEW

NOTES

1. See Standard Drawing E 706-BRTR-04 for thrie beam expansion element.
2. See Standard Drawing E 706-BRTR-02 for Section A-A.
3. Bridge railing post/blockout assembly. See Standard Drawing E 706-BRTR-03 for post and blockout details. Attach rail using two 5/8" Ø x 2" std. button head bolts with rectangular plate washers, round washers, and recess nuts.
4. Twelve 5/8" Ø std. button head bolts with round washers and recess nuts.
5. See Standard Drawing E 706-BRTR-05 for thrie beam guardrail transition type TGR.
6. Hand tighten post bolts on thrie beam expansion element and burr bolt threads.

INDIANA DEPARTMENT OF TRANSPORTATION

RETROFIT THRIE BEAM BRIDGE RAILING TR

SEPTEMBER 2012

STANDARD DRAWING NO. E 706-BRTR-01

RICHARD L. VanCLEAVE REGISTERED No. 9750 STATE OF INDIANA PROFESSIONAL ENGINEER

/s/ Richard L. VanCleave 09/04/12
SUPERVISOR, ROADWAY STANDARDS DATE

/s/ Mark A. Miller 09/04/12
CHIEF ENGINEER DATE

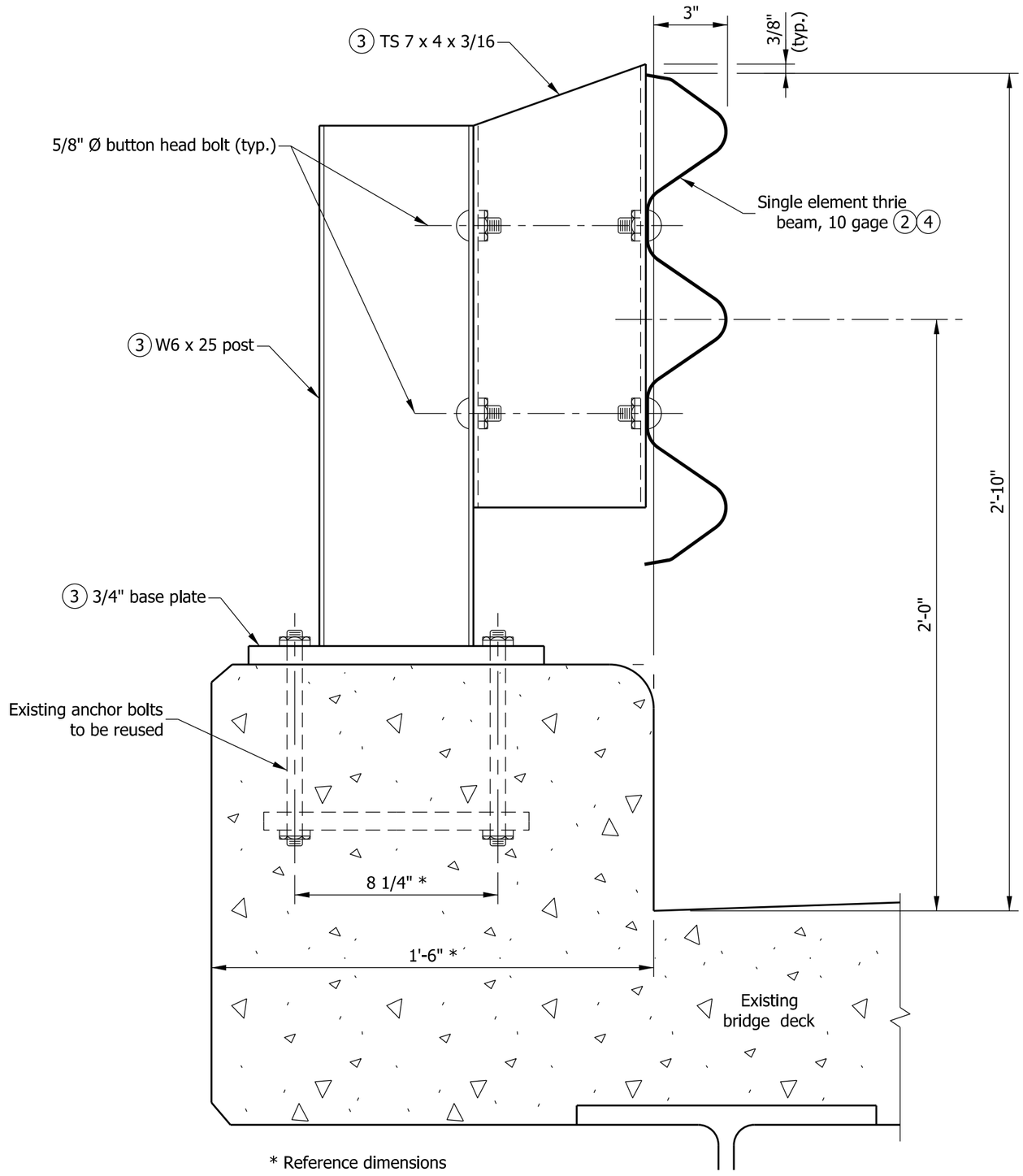

SECTION A-A

NOTES

1. See Standard Drawing E 706-BRTR-01 for plan view.

(2) See Standard Drawing E 601-TBGC-01 for thrie beam section.

(3) See Standard Drawing E 706-BRTR-03 for post, blockout, and base plate details.

(4) See Standard Drawing E 706-BRTR-04 for thrie beam bridge railing elements.

INDIANA DEPARTMENT OF TRANSPORTATION

RETROFIT THRIE BEAM
BRIDGE RAILING TR

SEPTEMBER 2012

STANDARD DRAWING NO. E 706-BRTR-02

RICHARD L. VanCLEAVE
REGISTERED
No. 9750
STATE OF INDIANA
PROFESSIONAL ENGINEER

/s/ Richard L. VanCleave 09/04/12
SUPERVISOR, ROADWAY STANDARDS DATE

/s/ Mark A. Miller 09/04/12
CHIEF ENGINEER DATE

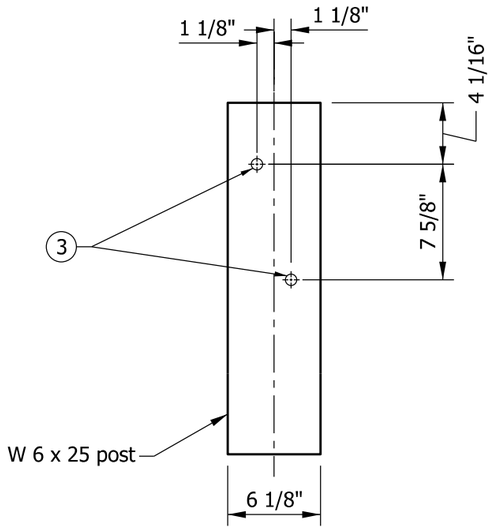

FRONT VIEW

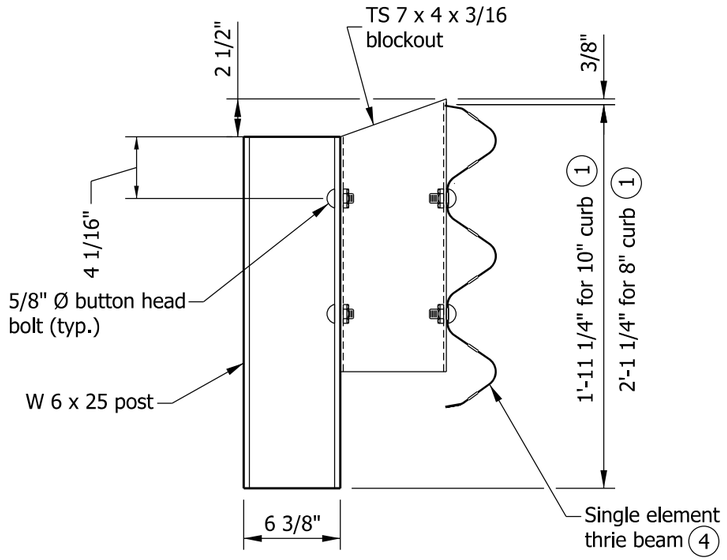

SIDE VIEW

W 6 x 25 POST DETAILS FOR CURB MOUNTED POSTS

NOTES

1. Adjust the post length for thrie beam height above the deck.
2. Locations of bolt holes on base plate shall match locations of existing anchor bolts.
3. All holes drilled or punched to 3/4" Ø.
4. See Standard Drawing E 706-BRTR-04 for thrie beam elements. See Standard Drawing E 601-TBGC-01 for thrie beam rail section.

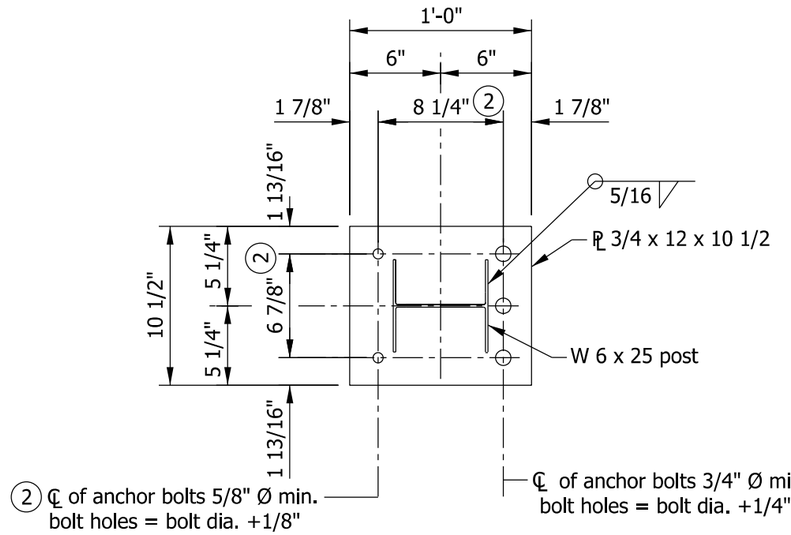

BASE PLATE DETAIL

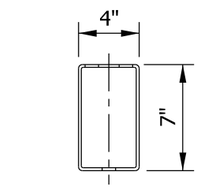

TOP VIEW

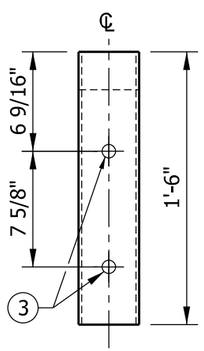

FRONT VIEW

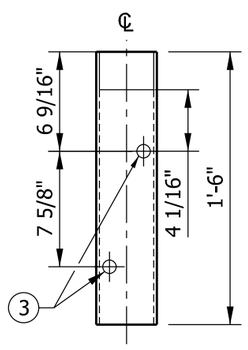

BACK VIEW

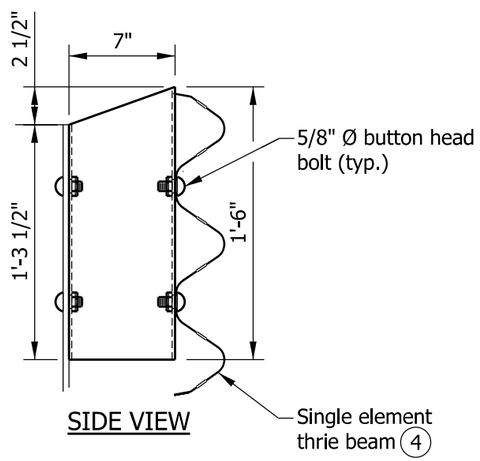

SIDE VIEW

TS 7 x 4 x 3/16 BLOCKOUT DETAILS FOR CURB MOUNTED POSTS

INDIANA DEPARTMENT OF TRANSPORTATION

RETROFIT THRIE BEAM
BRIDGE RAILING TR
COMPONENTS

SEPTEMBER 2012

STANDARD DRAWING NO. E 706-BRTR-03

RICHARD L. VanCLEAVE
REGISTERED
No. 9750
STATE OF INDIANA
PROFESSIONAL ENGINEER

/s/ Richard L. VanCleave 09/04/12
SUPERVISOR, ROADWAY STANDARDS DATE

/s/ Mark A. Miller 09/04/12
CHIEF ENGINEER DATE

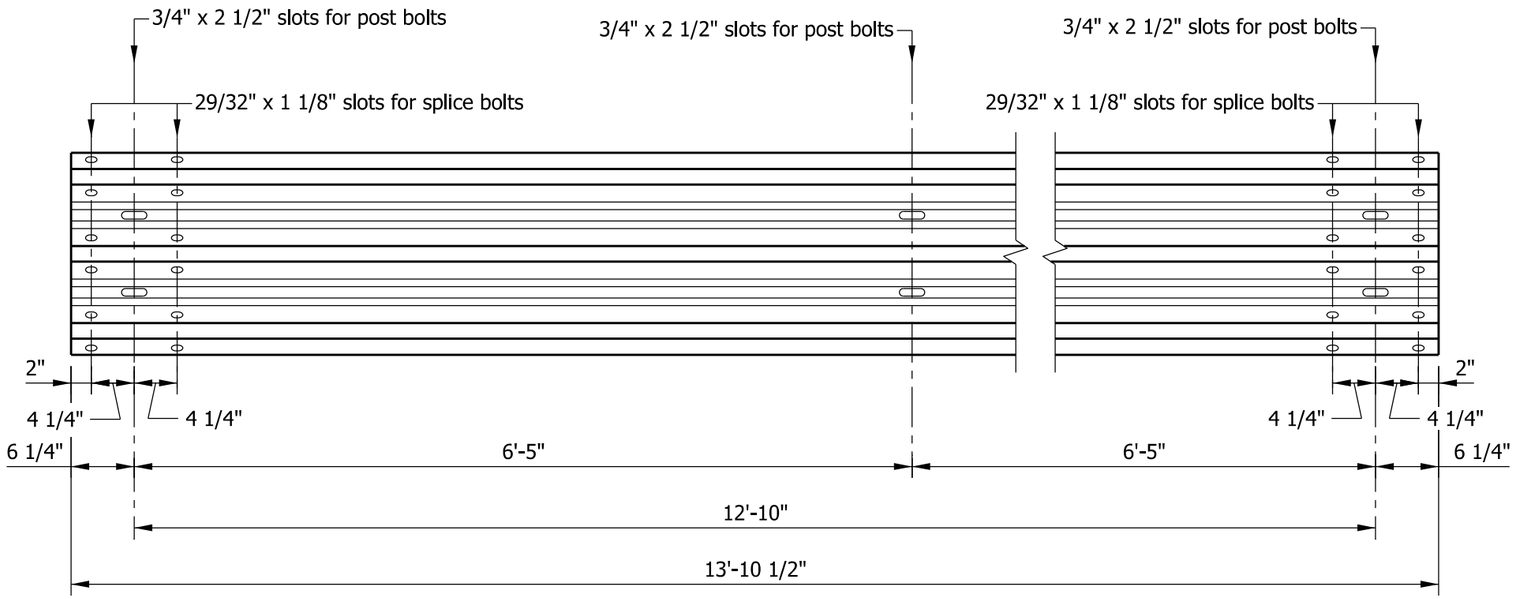

THRIE BEAM ELEVATION

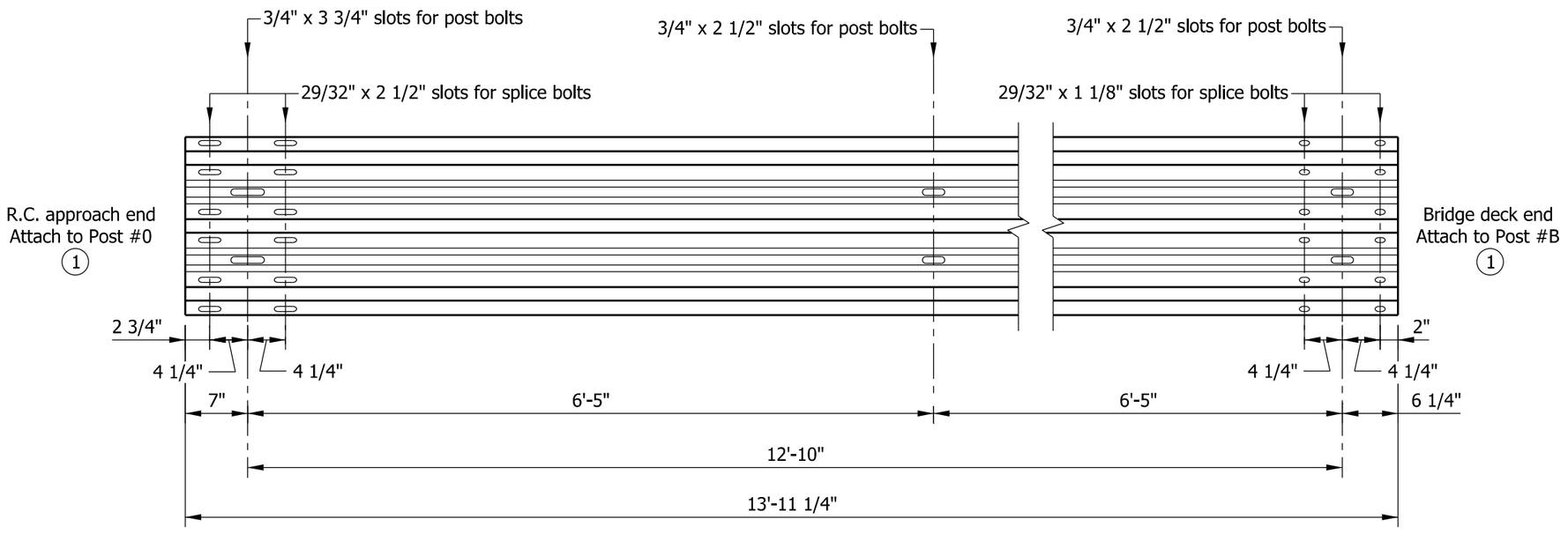

THRIE BEAM EXPANSION ELEMENT ELEVATION

NOTES

1. See Standard Drawing E 706-BRTR-01 for post locations.

INDIANA DEPARTMENT OF TRANSPORTATION

RETROFIT THRIE BEAM
BRIDGE RAILING TR
COMPONENTS
SEPTEMBER 2012

STANDARD DRAWING NO. E 706-BRTR-04

RICHARD L. VanCLEAVE
REGISTERED
No. 9750
STATE OF INDIANA
PROFESSIONAL ENGINEER

/s/ Richard L. VanCleave 09/04/12
SUPERVISOR, ROADWAY STANDARDS DATE

/s/ Mark A. Miller 09/04/12
CHIEF ENGINEER DATE

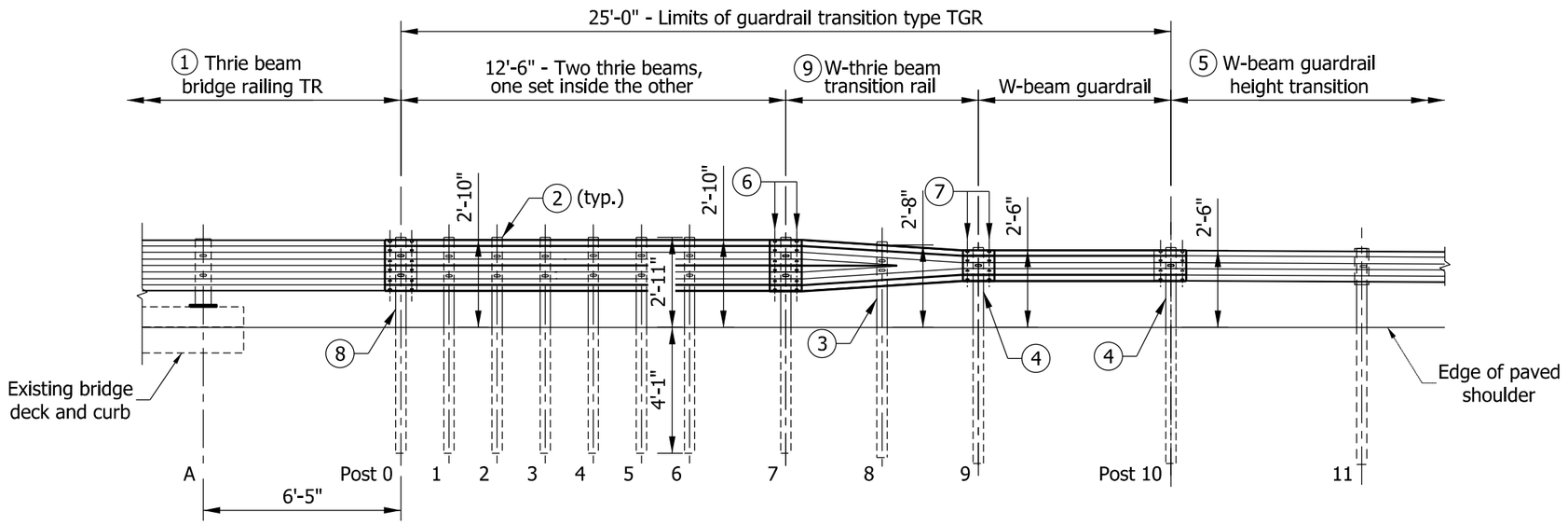

ELEVATION

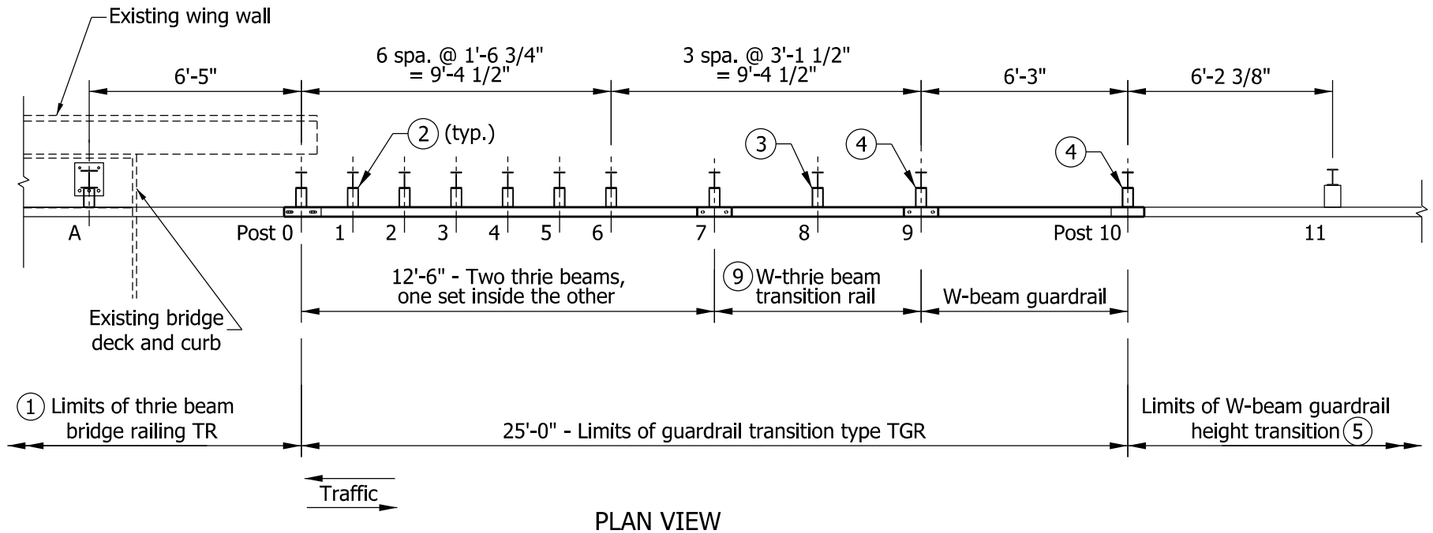

PLAN VIEW

NOTES

1. See Standard Drawing E 706-BRTR-01 for thrie beam bridge railing TR.
2. TGB transition post/blockout assembly. See Standard Drawing E 601-TTGB-03 for post and blockout details. Adjust post height to accommodate guardrail heights indicated on this sheet. Attach rail using two 5/8" Ø x 2" std. button head bolts with rectangular plate washers, round washers, and recess nuts.
3. W-thrie beam transition post/blockout assembly. See Standard Drawing E 601-TTGB-04 for post and blockout details. Adjust post height to accommodate guardrail heights indicated on this sheet. Attach rail using two 5/8" Ø x 2" std. button head bolts with rectangular plate washers, round washers, and recess nuts.
4. W-beam post/blockout assembly. See Standard Drawing E 601-TTGB-05 for post and blockout details. Adjust post height to accommodate guardrail heights indicated on this sheet. Attach rail using one 5/8" Ø x 1 1/4" std. button head bolt with rectangular plate washer, round washer, and recess nut.
5. See Standard Drawing E 706-BRTR-06 for W-beam guardrail height transition.
6. Twelve 5/8" Ø x 2" std. button head bolts with round washers and recess nuts, through rail sections.
7. Eight 5/8" Ø x 1 1/4" std. button head bolts with round washers and recess nuts.
8. Hand tighten post bolts on thrie beam expansion element and burr bolt threads.
9. See Standard Drawing E 601-TBGC-01 for W-thrie beam transition rail.

INDIANA DEPARTMENT OF TRANSPORTATION

RETROFIT THRIE BEAM GUARDRAIL TRANSITION TYPE TGR

SEPTEMBER 2012

STANDARD DRAWING NO. E 706-BRTR-05

RICHARD L. VanCLEAVE REGISTERED No. 9750 STATE OF INDIANA PROFESSIONAL ENGINEER

/s/ Richard L. VanCleave 09/04/12
SUPERVISOR, ROADWAY STANDARDS DATE

/s/ Mark A. Miller 09/04/12
CHIEF ENGINEER DATE

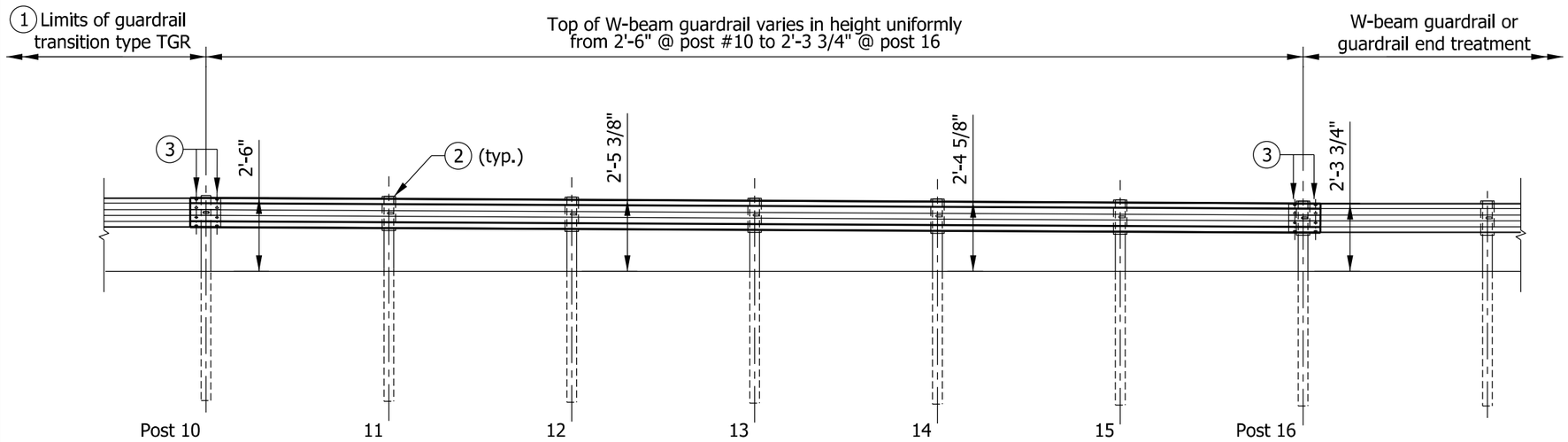

ELEVATION

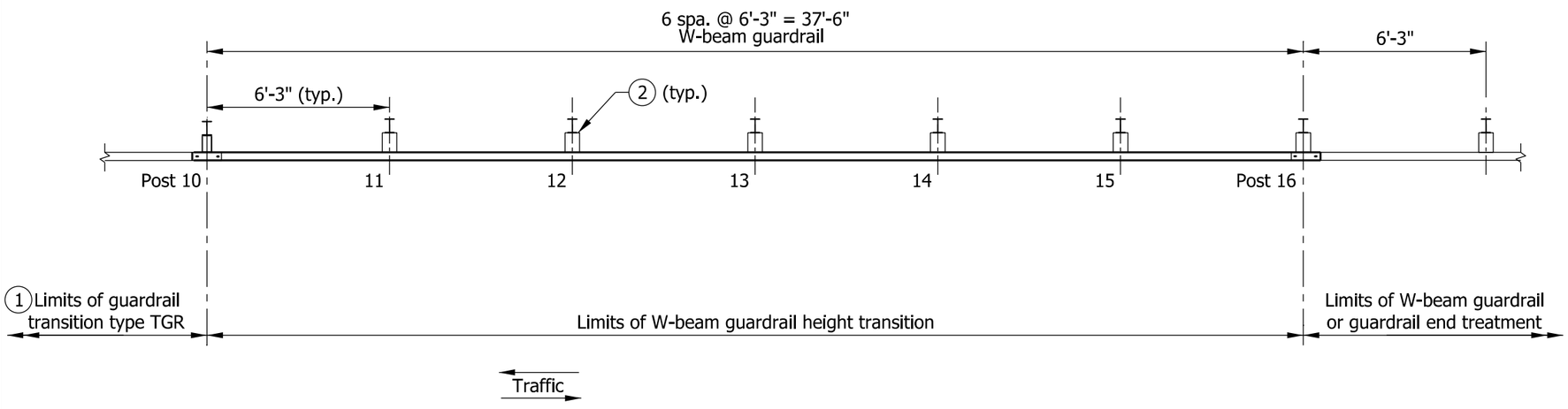

PLAN VIEW

NOTES

1. See Standard Drawing E 706-BRTR-05 for thrie beam guardrail transition type TGR.
2. W-beam post/blockout assembly. See Standard Drawing E 601-WGBA-01 for post and blockout details. Adjust post height to accommodate guardrail heights indicated on this sheet. Attach rail using one 5/8" Ø x 1 1/4" std. button head bolt with rectangular plate washer, round washer, and recess nut.
3. Eight 5/8" Ø x 1 1/4" std. button head bolts with round washers and recess nuts.

INDIANA DEPARTMENT OF TRANSPORTATION

RETROFIT THRIE BEAM GUARDRAIL HEIGHT TRANSITION

SEPTEMBER 2012

STANDARD DRAWING NO. E 706-BRTR-06

RICHARD L. VanCLEAVE REGISTERED No. 9750 STATE OF INDIANA PROFESSIONAL ENGINEER

/s/ Richard L. VanCleave 09/04/12
SUPERVISOR, ROADWAY STANDARDS DATE

/s/ Mark A. Miller 09/04/12
CHIEF ENGINEER DATE

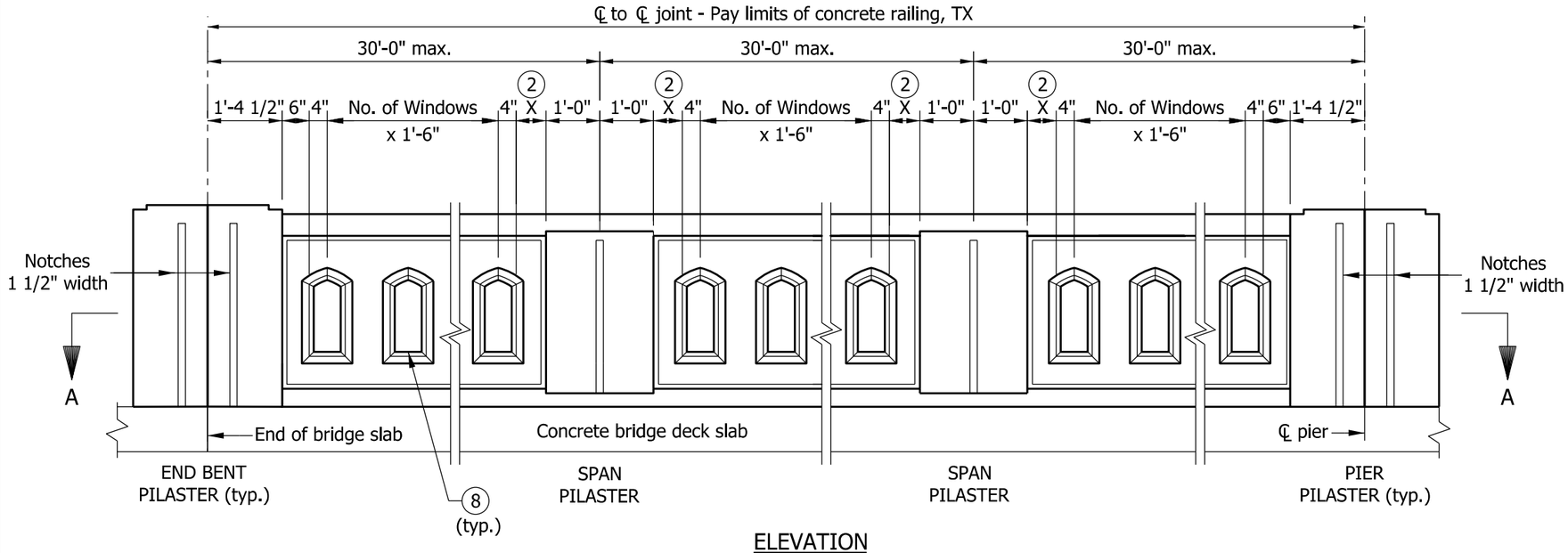

ELEVATION

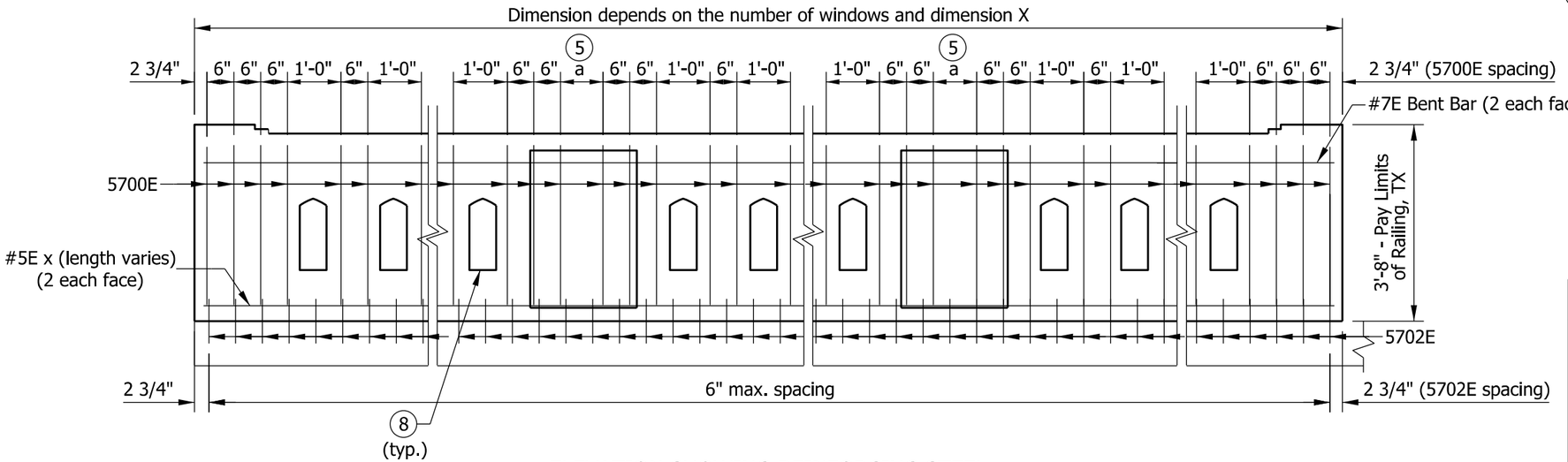

ELEVATION SHOWING REINFORCING STEEL

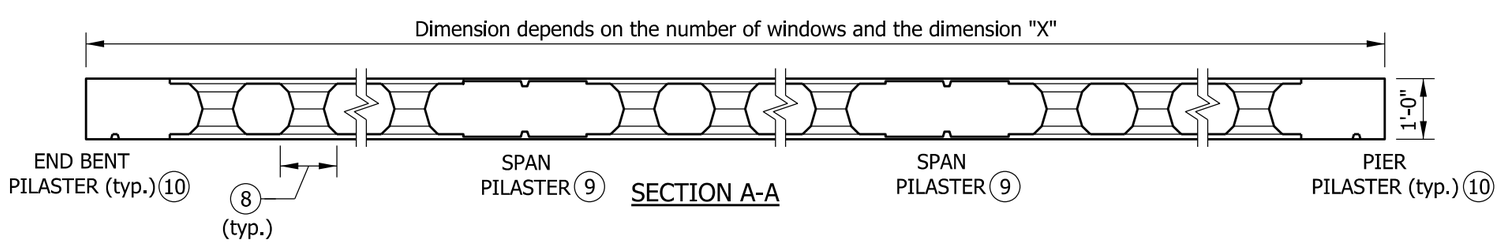

SECTION A-A

NOTES

1. See Standard Drawing E 706-BRTX-02, -03, and -04 for sections.
2. Select the number of windows and adjust dimension X to fit the span length.
3. Span pilasters may be omitted for a short span with X ≤ 2'-0".
4. Span pilasters are for aesthetic purposes only. Omitting span pilasters does not decrease the integrity of the railing.
5. Dimension a = 2X + 3 1/2". Space bars within dimension a equally ≤ 6".
6. See Standard Drawing E 706-TTTX-01 for Concrete Bridge Railing Transition, TTTX.
7. All reinforcing bars designated E shall be epoxy coated.
8. Window opening. See Standard Drawing E 706-BRTX-02 for details.
9. See Standard Drawing E 706-BRTX-03 for span pilaster details.
10. See Standard Drawing E 706-BRTX-04 for pier and end bent pilaster details.

INDIANA DEPARTMENT OF TRANSPORTATION

RAILING, TX
TYPICAL PANEL

SEPTEMBER 2012

STANDARD DRAWING NO. E 706-BRTX-01

RICHARD L. VanCLEAVE REGISTERED No. 9750 STATE OF INDIANA PROFESSIONAL ENGINEER

/s/ Richard L. VanCleave 09/04/12
SUPERVISOR, ROADWAY STANDARDS DATE

/s/ Mark A. Miller 09/04/12
CHIEF ENGINEER DATE

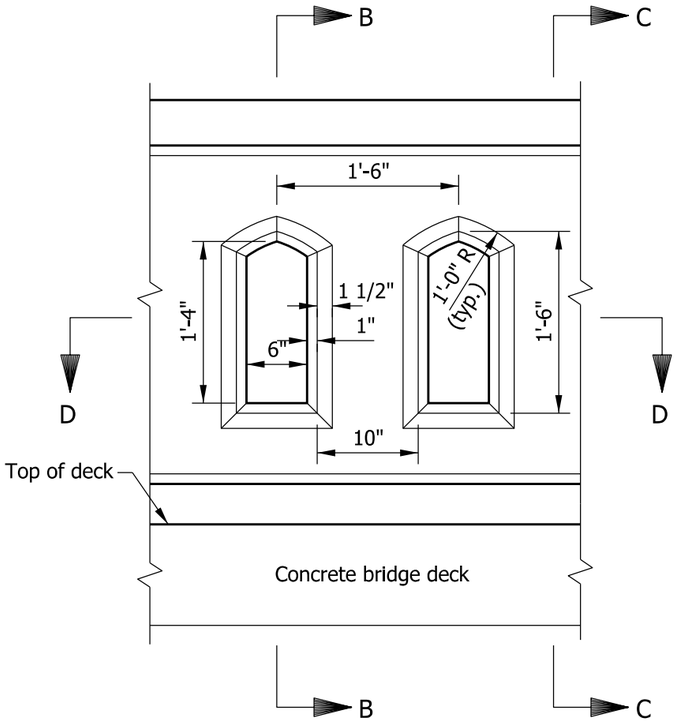

ELEVATION

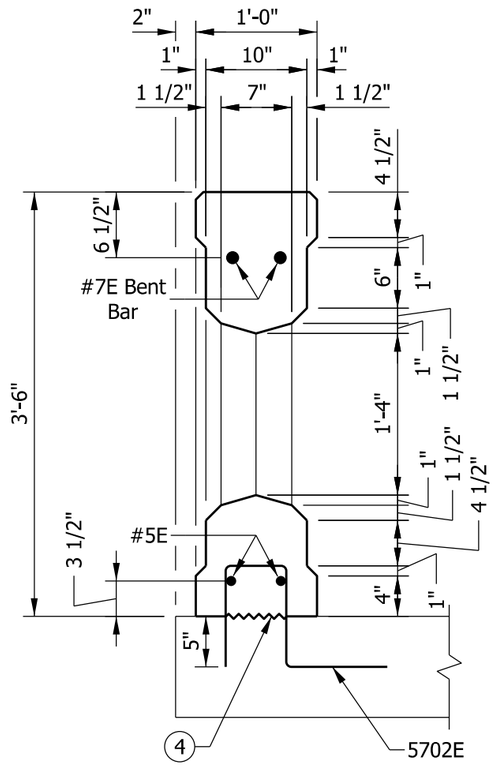

SECTION B-B

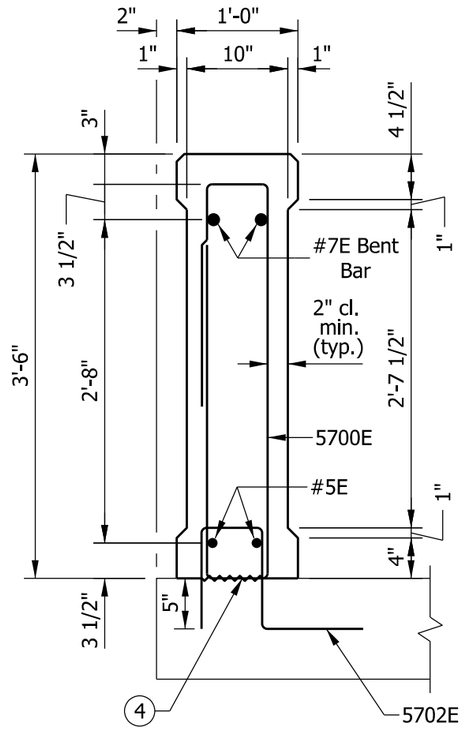

SECTION C-C

NOTES

1. All reinforcing bars designated E shall be epoxy coated.
2. All chamfered edges shall be 3/4".
3. See Standard Drawing E 706-BRTX-04 for reinforcing-bar diagrams.

(4) Construction joint type A. See Standard Drawing E 702-CJTA-01 for details.

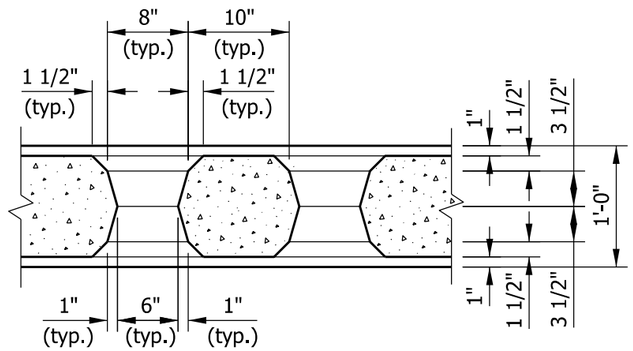

SECTION D-D

INDIANA DEPARTMENT OF TRANSPORTATION

RAILING, TX
WINDOW DETAILS

SEPTEMBER 2012

STANDARD DRAWING NO. E 706-BRTX-02

RICHARD L. VanCLEAVE
REGISTERED
No. 9750
STATE OF INDIANA
PROFESSIONAL ENGINEER

/s/ Richard L. VanCleave 09/04/12
SUPERVISOR, ROADWAY STANDARDS DATE

/s/ Mark A. Miller 09/04/12
CHIEF ENGINEER DATE

NOTES

1. All reinforcing bars designated E shall be epoxy coated.
2. All chamfered edges shall be 3/4".
3. See Standard Drawing E 706-BRTX-04 for reinforcing-bar diagrams.
4. Construction joint type A. See Standard Drawing E 702-CJTA-01 for details.
5. Adjust dimension X to fit the span length, depending upon the number of window openings.

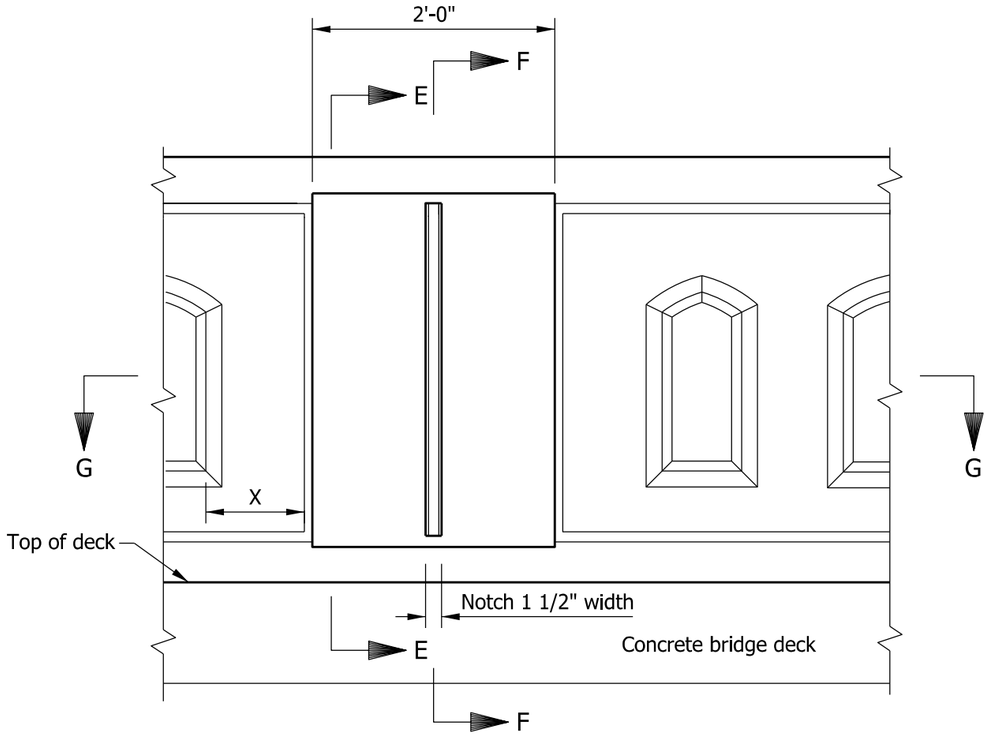

ELEVATION

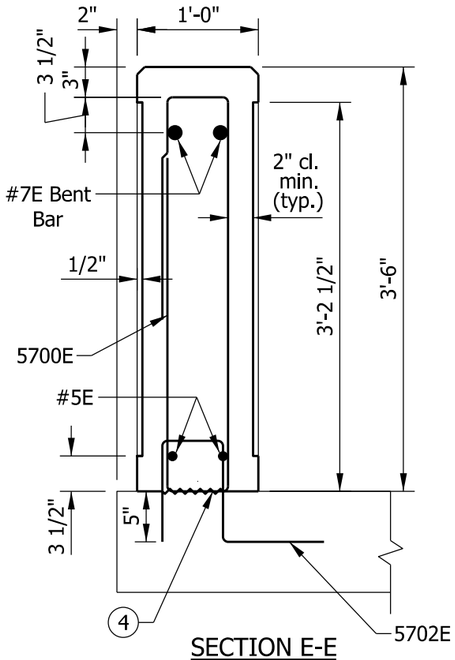

SECTION E-E

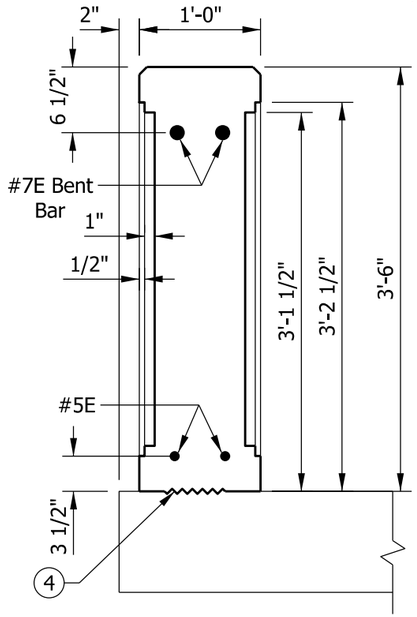

SECTION F-F

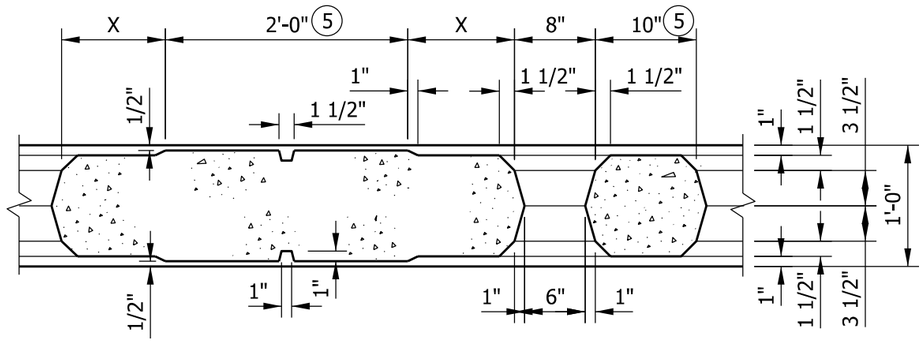

SECTION G-G

INDIANA DEPARTMENT OF TRANSPORTATION	
RAILING, TX SPAN PILASTER SEPTEMBER 2012	
STANDARD DRAWING NO. E 706-BRTX-03	
RICHARD L. VanCLEAVE REGISTERED No. 9750 STATE OF INDIANA PROFESSIONAL ENGINEER	/s/ Richard L. VanCleave 09/04/12 SUPERVISOR, ROADWAY STANDARDS DATE /s/ Mark A. Miller 09/04/12 CHIEF ENGINEER DATE

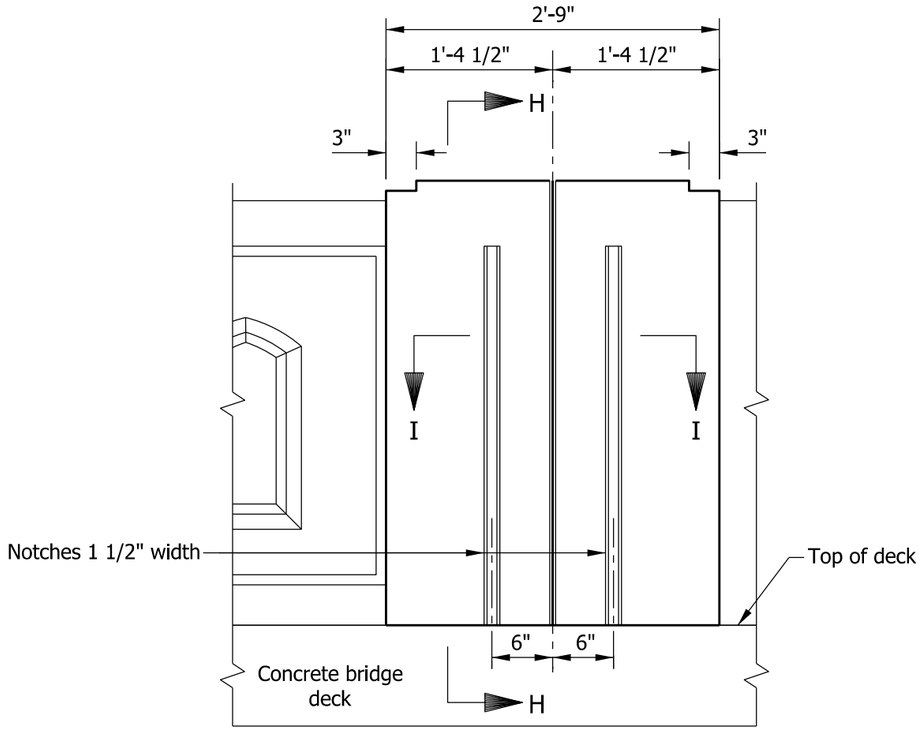

ELEVATION

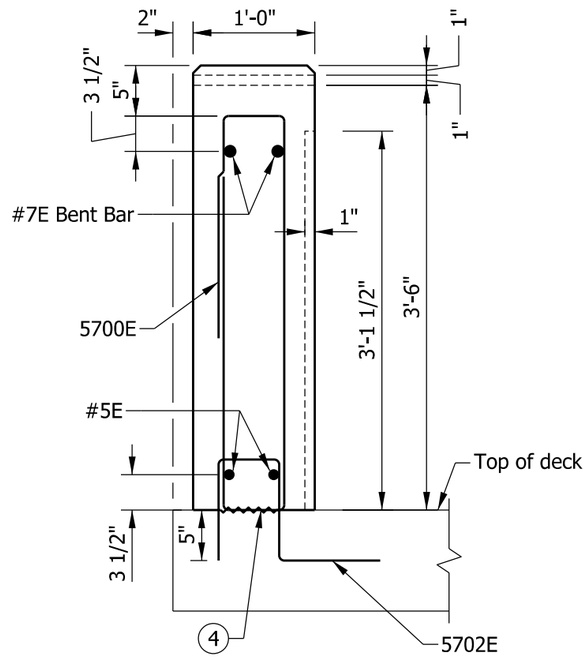

SECTION H-H

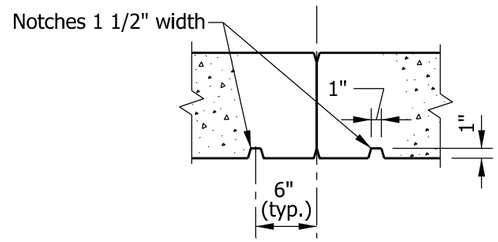

SECTION I-I

NOTES

1. All reinforcing bars designated E shall be epoxy coated.
2. See Standard Drawing E 703-BRST-01 for reinforcing-bar bending details and notes.
3. All chamfered edges shall be 3/4".

(4) Construction joint type A. See Standard Drawing E 702-CJTA-01 for details.

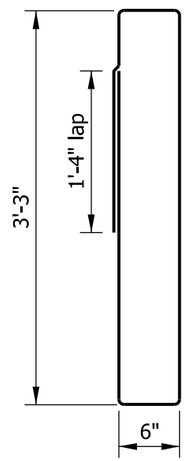

5700E x 8'-10"

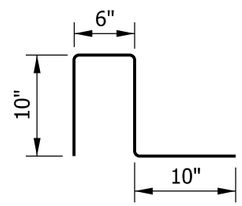

5702E x 2'-2"

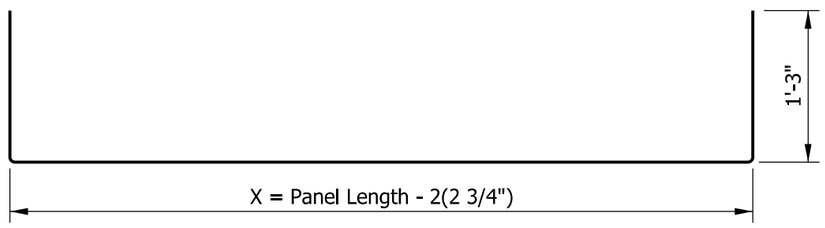

#7E BENT BAR x (X + 2'-6")

INDIANA DEPARTMENT OF TRANSPORTATION

RAILING, TX
PIER OR END BENT PILASTER

SEPTEMBER 2012

STANDARD DRAWING NO. E 706-BRTX-04

RICHARD L. VanCLEAVE REGISTERED No. 9750 STATE OF INDIANA PROFESSIONAL ENGINEER

/s/ Richard L. VanCleave 09/04/12
SUPERVISOR, ROADWAY STANDARDS DATE

/s/ Mark A. Miller 09/04/12
CHIEF ENGINEER DATE

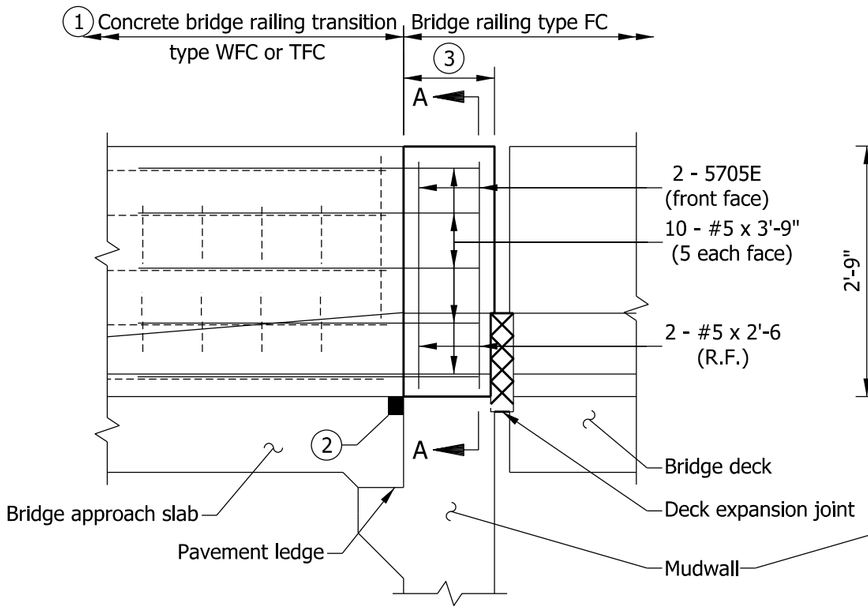

PART ELEVATION

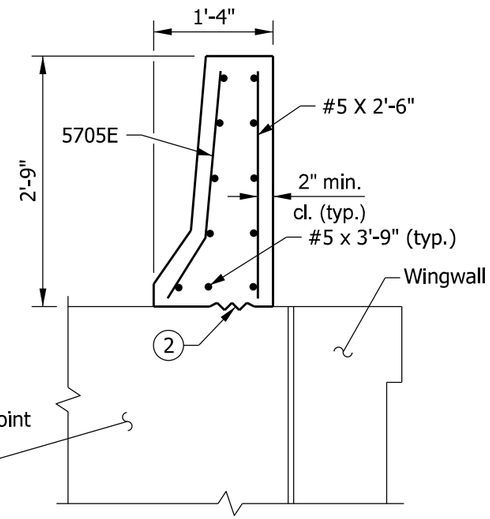

SECTION A-A

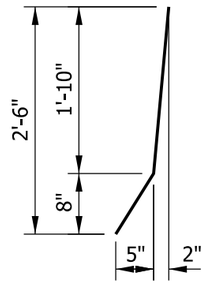

5705E x 2'-8"

NOTES

1. See Standard Drawings E 706-TWFC-01 through -03 for concrete bridge railing transition type WFC. See Standard Drawings E 706-TTFC-01 through -03 for concrete bridge railing transition type TFC.
2. See Standard Drawing E 609-BRJT-01 for joint type I-A.
3. This shall be part of the concrete bridge railing, but it shall be poured with the concrete bridge-railing transition. The minimum length shall be equal to the width of the mudwall. See Standard Drawing E 706-BRSF-01 for bridge railing type FC dimensions.
4. See Standard Drawing E 703-BRST-01 for reinforcing-bar bending details and notes.

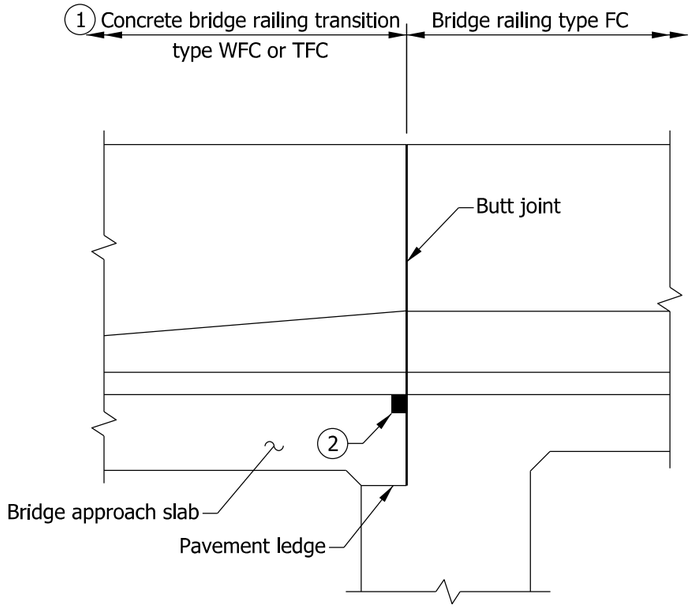

DETAIL AT INTEGRAL END BENT

INDIANA DEPARTMENT OF TRANSPORTATION

BRIDGE RAILING TRANSITION WFC OR TFC DETAILS AT END BENT

SEPTEMBER 2012

STANDARD DRAWING NO. E 706-CBRT-01

RICHARD L. VanCLEAVE REGISTERED No. 9750 STATE OF INDIANA PROFESSIONAL ENGINEER

/s/ Richard L. VanCleave 09/04/12
SUPERVISOR, ROADWAY STANDARDS DATE

/s/ Mark A. Miller 09/04/12
CHIEF ENGINEER DATE

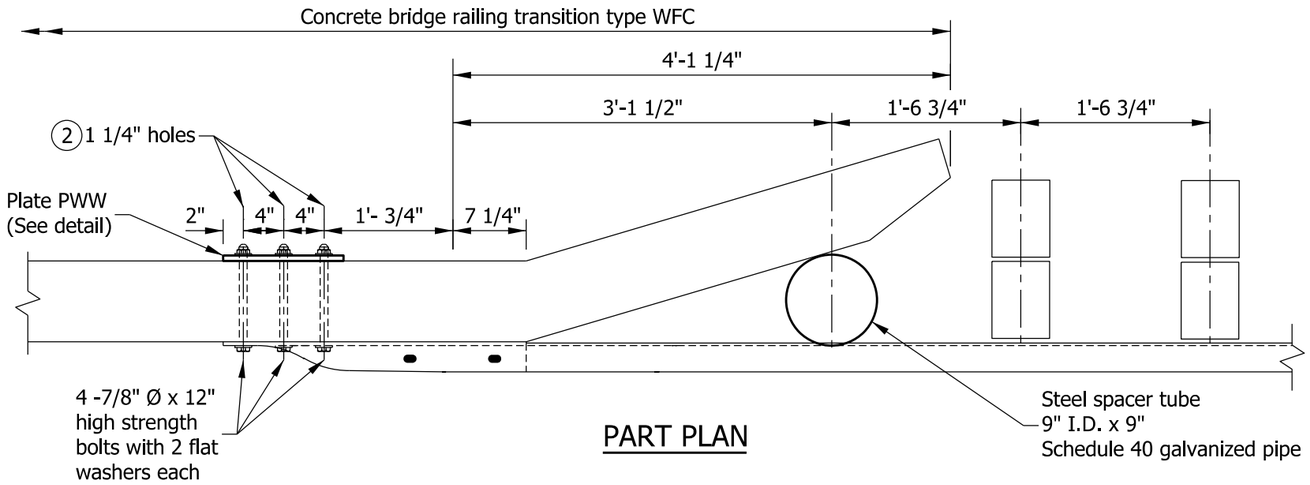

PART PLAN

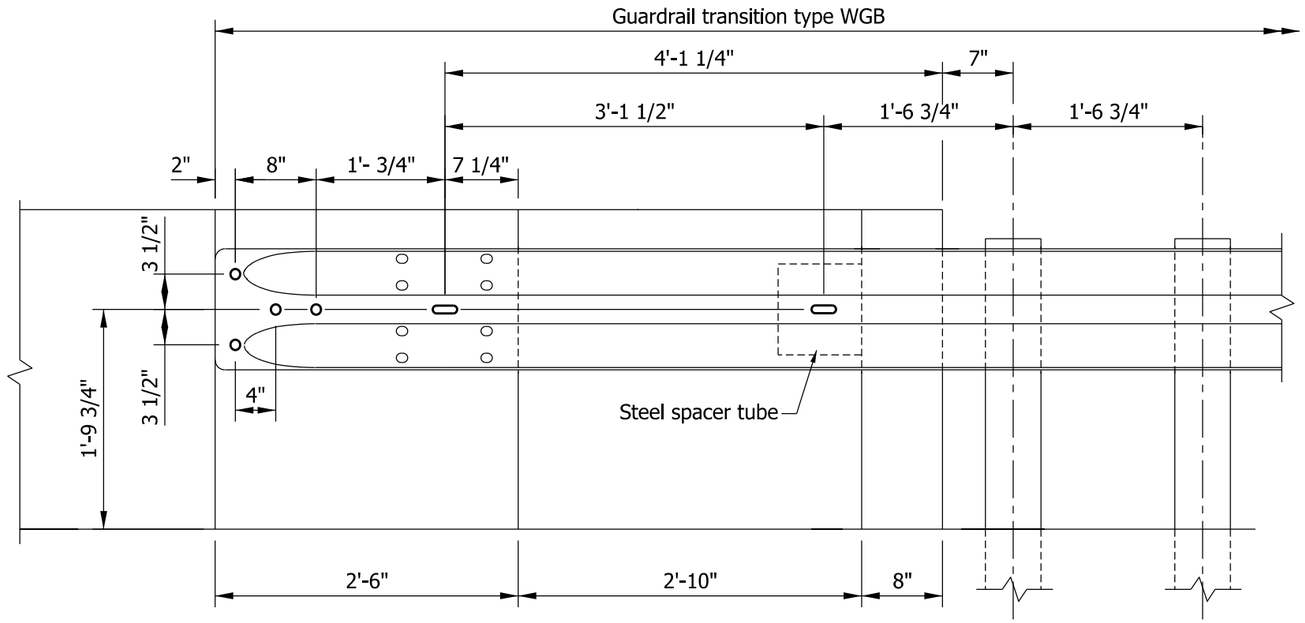

PART ELEVATION

NOTES

1. See Standard Drawing E 706-TWFC-01 through -03 for concrete bridge railing transition type WFC. See Standard Drawings E 601-TWGB-01 through -03 for guardrail transition type WGB .

(2) Preformed holes, for connection of the guardrail transition type WGB to the end of the concrete bridge railing transition type WFC.

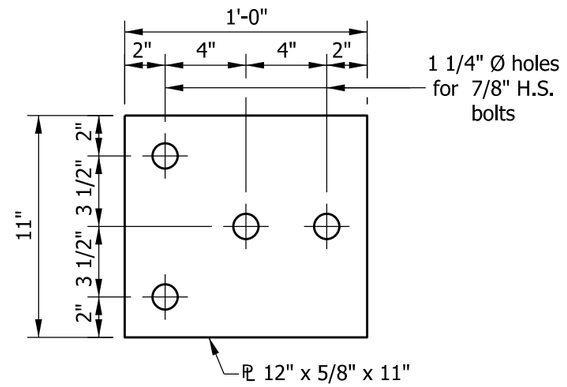

PLATE PWW

INDIANA DEPARTMENT OF TRANSPORTATION

BRIDGE RAILING TRANSITION WFC
ATTACHMENT OF GUARDRAIL

SEPTEMBER 2012

STANDARD DRAWING NO. E 706-CBRT-02

RICHARD L. VanCLEAVE REGISTERED No. 9750 STATE OF INDIANA PROFESSIONAL ENGINEER

/s/ Richard L. VanCleave 09/04/12
SUPERVISOR, ROADWAY STANDARDS DATE

/s/ Mark A. Miller 09/04/12
CHIEF ENGINEER DATE

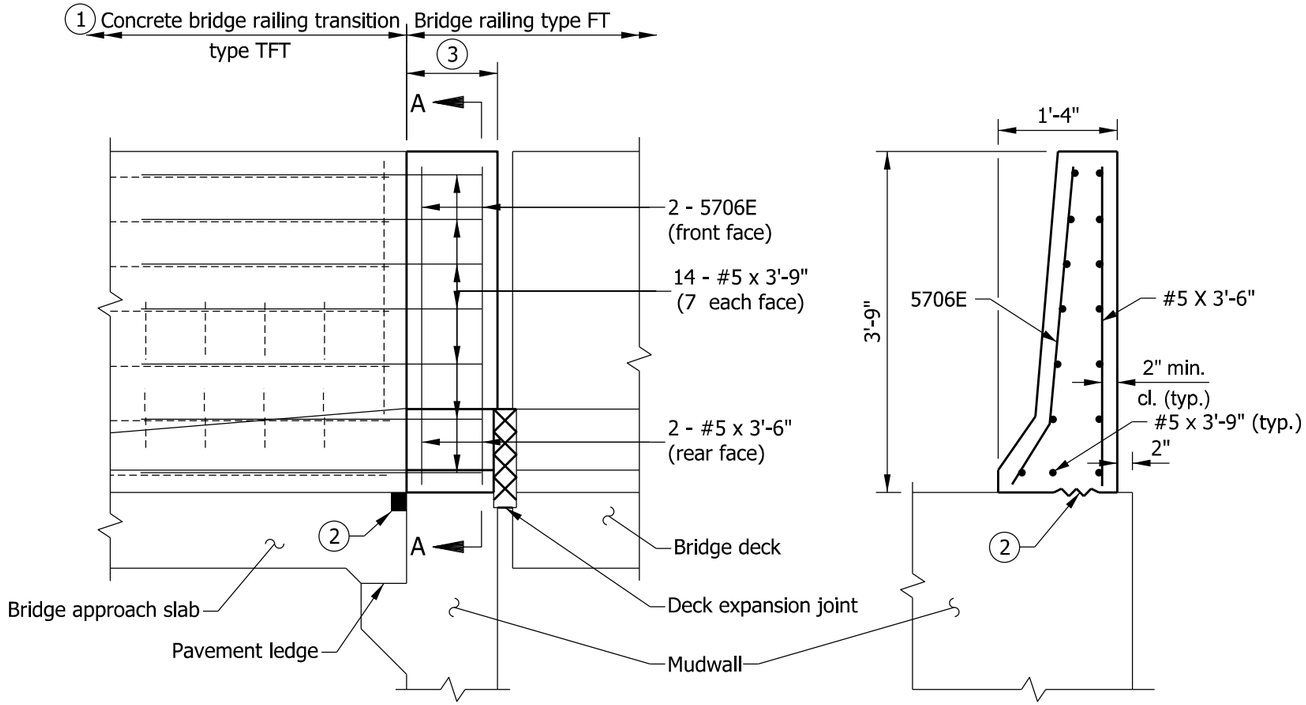

PART ELEVATION

SECTION A-A

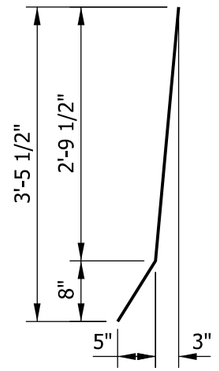

5706E x 3'-7"

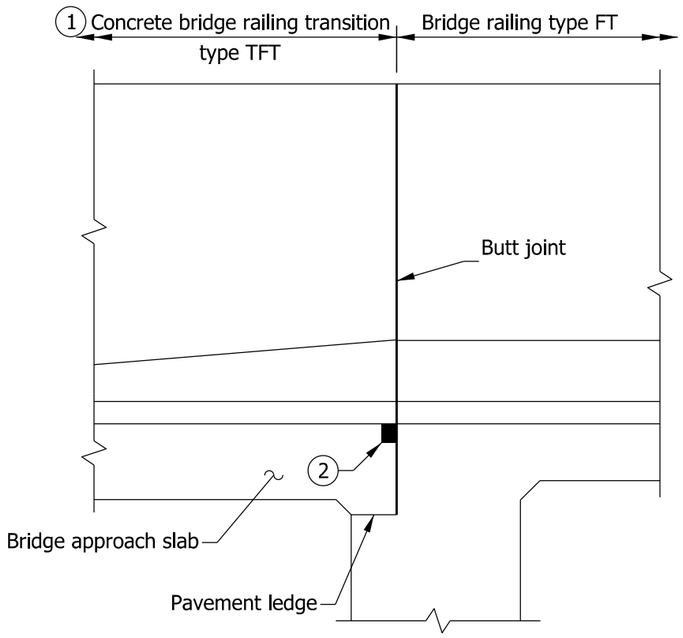

DETAIL AT INTEGRAL END BENT

NOTES

1. See Standard Drawings E 706-TTFT-01 through -03 for concrete bridge railing transition type TFT details.
2. See Standard Drawing E 609-BRJT-01 for joint type I-A.
3. This shall be part of the concrete bridge railing, but it shall be poured with the concrete bridge-railing transition. The minimum length shall be equal to the width of the mudwall. See Standard Drawing E 706-BRSF-02 for bridge railing type FT dimensions.
4. See Standard Drawing E 703-BRST-01 for reinforcing-bar bending diagrams and notes.

INDIANA DEPARTMENT OF TRANSPORTATION

BRIDGE RAILING TRANSITION TFT
DETAILS AT END BENT

SEPTEMBER 2012

STANDARD DRAWING NO. E 706-CBRT-03

RICHARD L. VanCLEAVE REGISTERED No. 9750 STATE OF INDIANA PROFESSIONAL ENGINEER

/s/ Richard L. VanCleave 09/04/12
SUPERVISOR, ROADWAY STANDARDS DATE

/s/ Mark A. Miller 09/04/12
CHIEF ENGINEER DATE

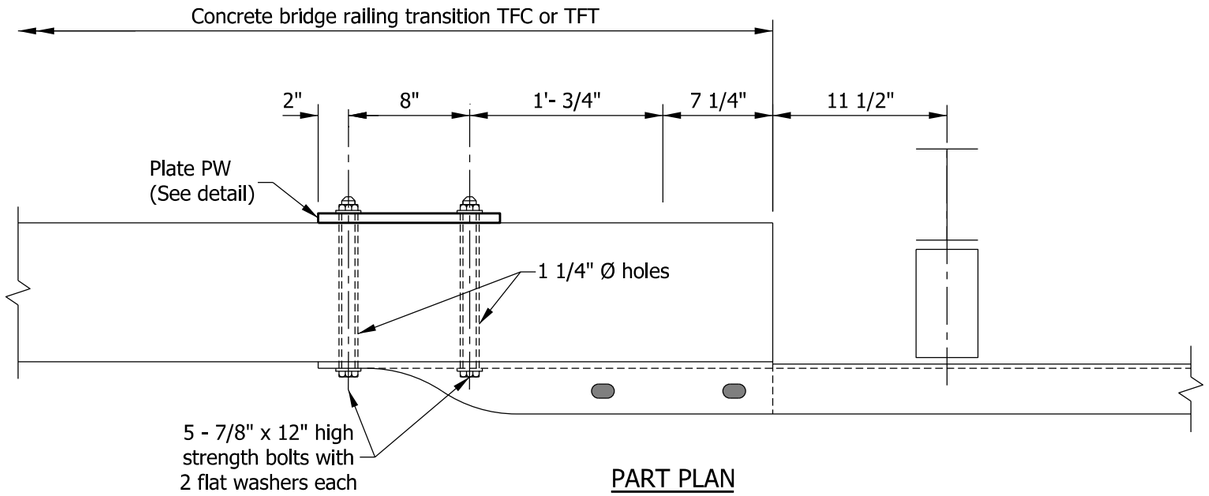

PART PLAN

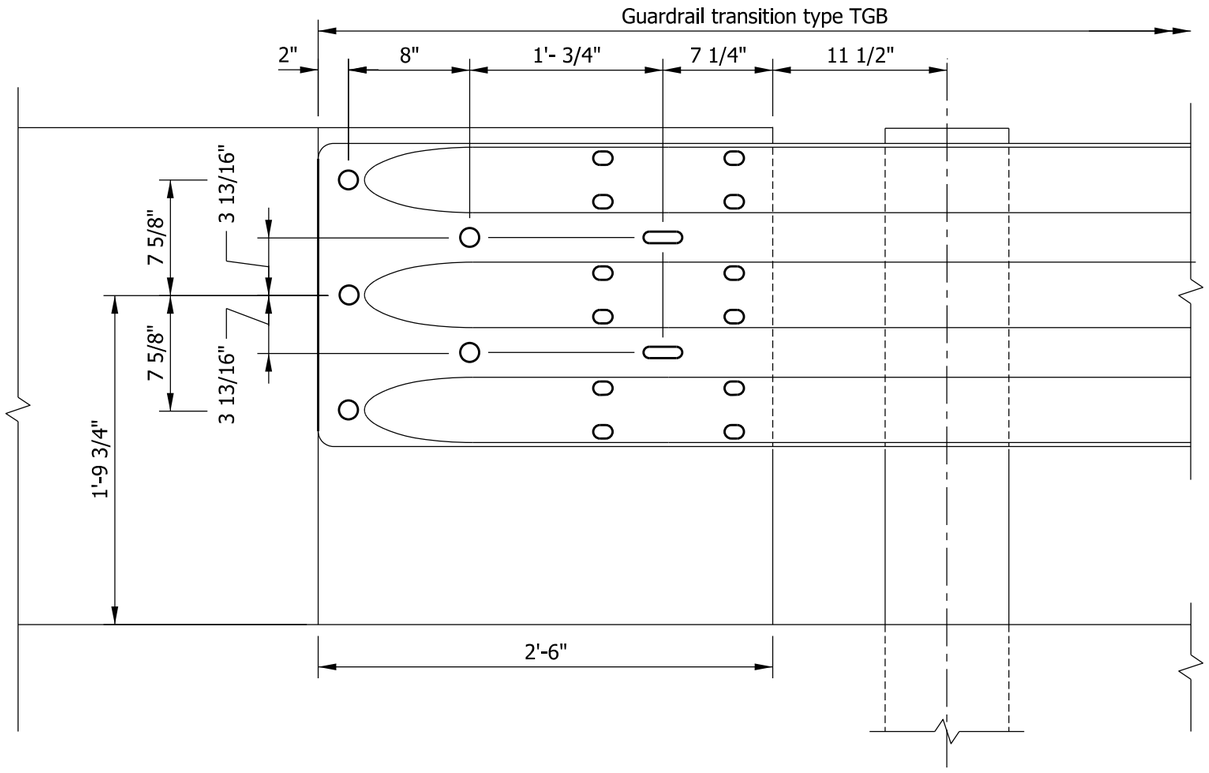

PART ELEVATION

NOTES

1. See Standard Drawings E 706-TTFC-01 through -03 for concrete bridge railing transition type TFC. See Standard Drawings E 706-TTFT-01 through -03 for concrete bridge railing transition type TFT. See Standard Drawings E 601-TTGB-01 through -05 for guardrail transition type TGB.

2 Preformed holes, for connection of the guardrail transition type TGB to the end of the concrete bridge railing transition type TFC or TFT.

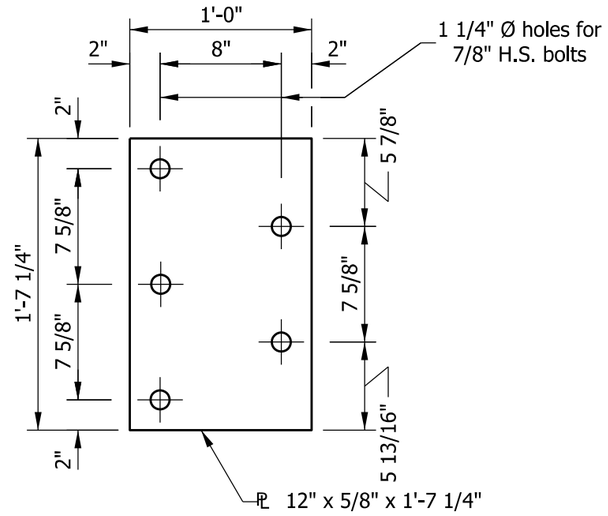

PLATE PW

INDIANA DEPARTMENT OF TRANSPORTATION

BRIDGE RAILING TRANSITION TFC OR TFT ATTACHMENT OF GUARDRAIL

SEPTEMBER 2012

STANDARD DRAWING NO. E 706-CBRT-04

RICHARD L. VanCLEAVE REGISTERED No. 9750 STATE OF INDIANA PROFESSIONAL ENGINEER

/s/ Richard L. VanCleave 09/04/12

SUPERVISOR, ROADWAY STANDARDS DATE

/s/ Mark A. Miller 09/04/12

CHIEF ENGINEER DATE

NOTES

1. See Standard Drawing E 706-MSRW-10 for reinforcing-bar diagrams and General Notes ⬡.

(2) See Standard Drawing E 706-BRSF-01 for concrete railing type FC details.

(3) Construction joint type A. See Standard Drawing E 702-CJTA-01 for details.

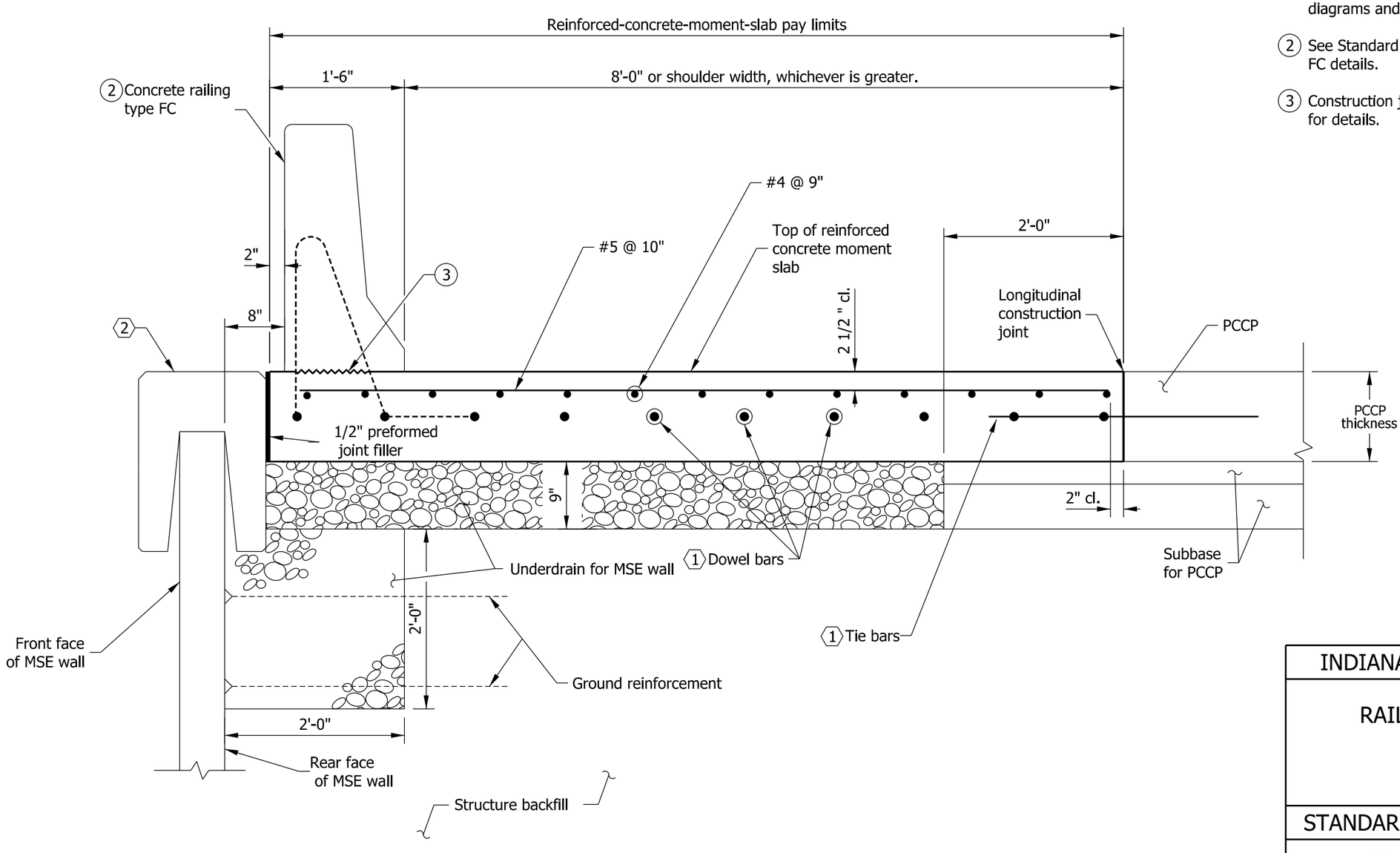

INDIANA DEPARTMENT OF TRANSPORTATION

RAILING TYPE FC AND MOMENT SLAB
ASIDE MSE WALL - PCCP

SEPTEMBER 2012

STANDARD DRAWING NO. E 706-MSRW-01

RICHARD L. VanCLEAVE
REGISTERED
No. 9750
STATE OF INDIANA
PROFESSIONAL ENGINEER

/s/ Richard L. VanCleave 09/04/12
SUPERVISOR, ROADWAY STANDARDS DATE

/s/ Mark A. Miller 09/04/12
CHIEF ENGINEER DATE

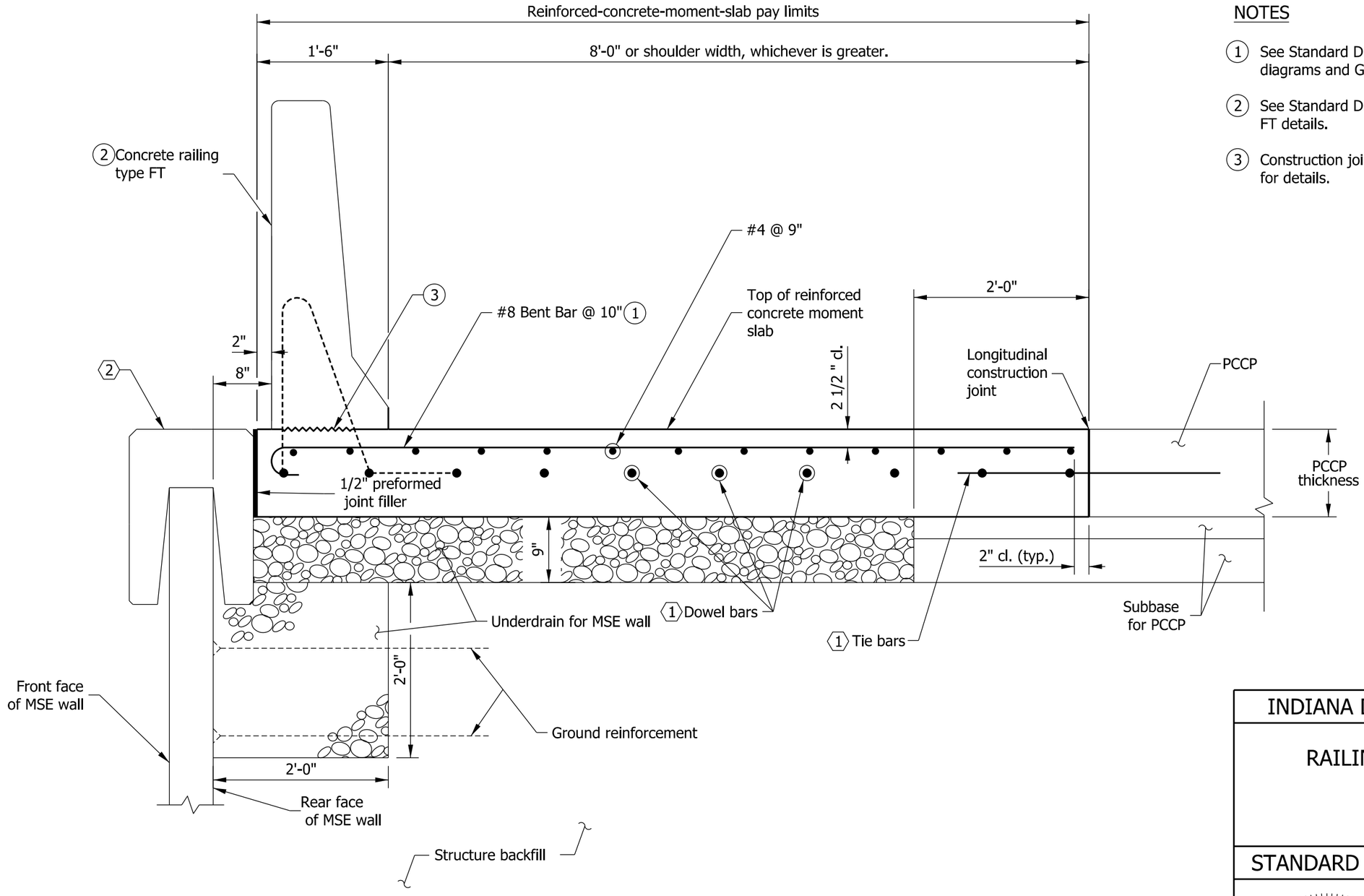

NOTES

1. See Standard Drawing E 706-MSRW-10 for reinforcing-bar diagrams and General Notes ⬡.
2. See Standard Drawing E 706-BRSF-02 for concrete railing type FT details.
3. Construction joint type A. See Standard Drawing E 702-CJTA-01 for details.

INDIANA DEPARTMENT OF TRANSPORTATION

RAILING TYPE FT AND MOMENT SLAB ASIDE MSE WALL - PCCP

SEPTEMBER 2012

STANDARD DRAWING NO. E 706-MSRW-02

RICHARD L. VanCLEAVE REGISTERED No. 9750 STATE OF INDIANA PROFESSIONAL ENGINEER

/s/ Richard L. VanCleave 09/04/12
SUPERVISOR, ROADWAY STANDARDS DATE

/s/ Mark A. Miller 09/04/12
CHIEF ENGINEER DATE

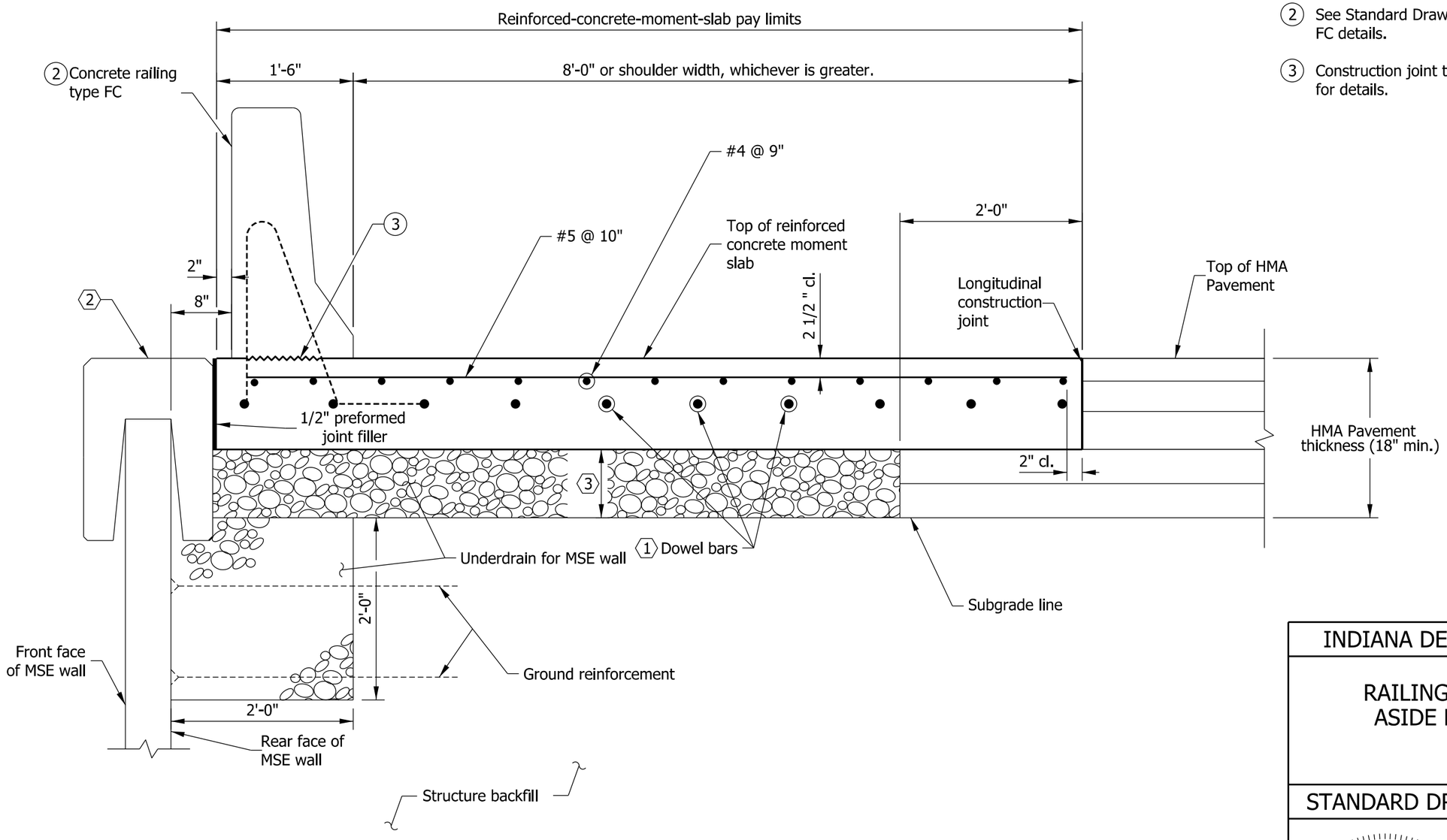

NOTES

1. See Standard Drawing E 706-MSRW-10 for reinforcing-bar diagrams and General Notes ⬡.

(2) See Standard Drawing E 706-BRSF-01 for concrete railing type FC details.

(3) Construction joint type A. See Standard Drawing E 702-CJTA-01 for details.

INDIANA DEPARTMENT OF TRANSPORTATION

RAILING TYPE FC AND MOMENT SLAB ASIDE MSE WALL - HMA PAVEMENT

SEPTEMBER 2012

STANDARD DRAWING NO. E 706-MSRW-03

RICHARD L. VanCLEAVE REGISTERED No. 9750 STATE OF INDIANA PROFESSIONAL ENGINEER

/s/ Richard L. VanCleave 09/04/12
SUPERVISOR, ROADWAY STANDARDS DATE

/s/ Mark A. Miller 09/04/12
CHIEF ENGINEER DATE

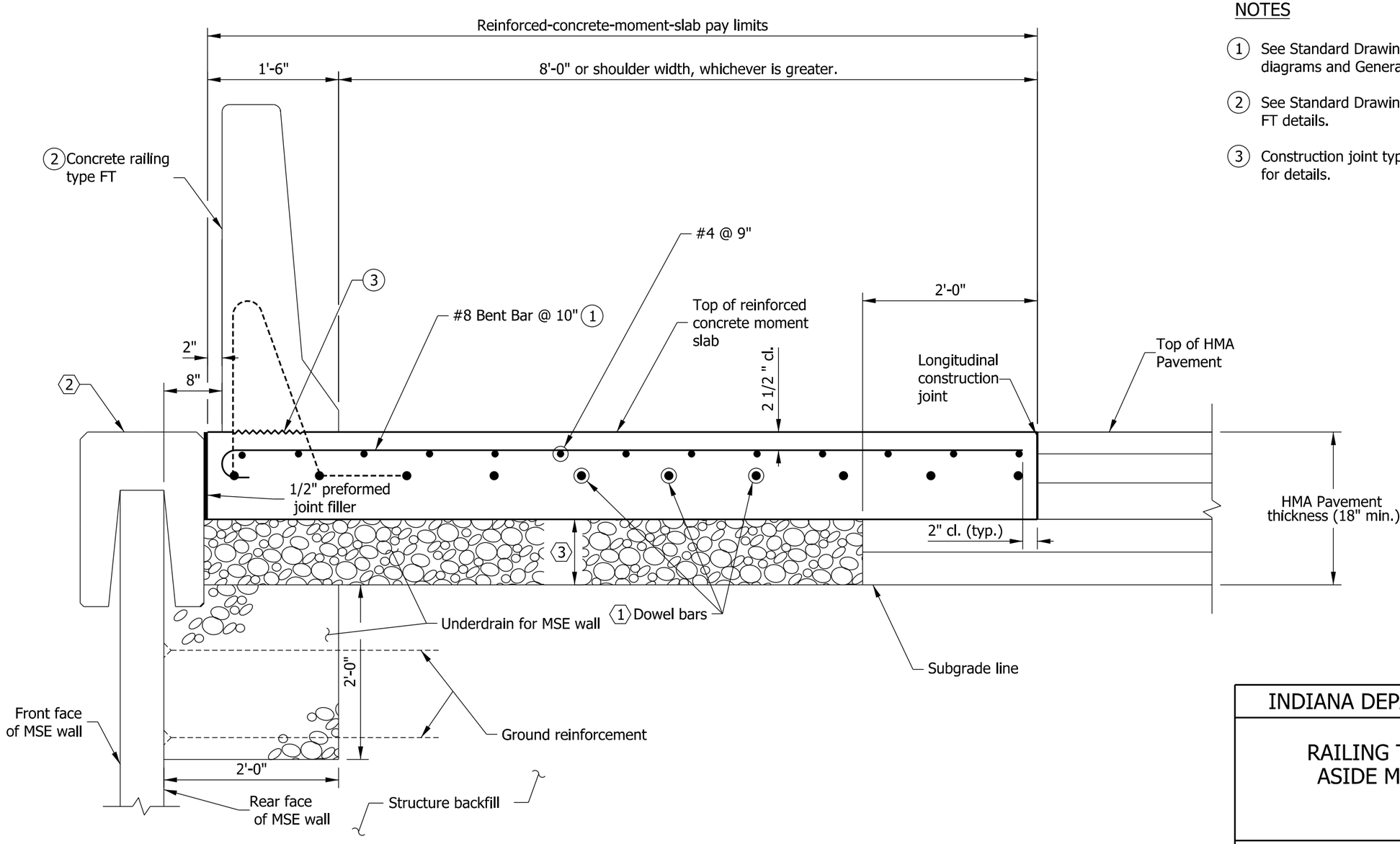

NOTES

1. See Standard Drawing E 706-MSRW-10 for reinforcing-bar diagrams and General Notes ⬡.
2. See Standard Drawing E 706-BRSF-02 for concrete railing type FT details.
3. Construction joint type A. See Standard Drawing E 702-CJTA-01 for details.

INDIANA DEPARTMENT OF TRANSPORTATION

RAILING TYPE FT AND MOMENT SLAB ASIDE MSE WALL - HMA PAVEMENT

SEPTEMBER 2012

STANDARD DRAWING NO. E 706-MSRW-04

RICHARD L. VanCLEAVE REGISTERED No. 9750 STATE OF INDIANA PROFESSIONAL ENGINEER

/s/ Richard L. VanCleave 09/04/12
SUPERVISOR, ROADWAY STANDARDS DATE

/s/ Mark A. Miller 09/04/12
CHIEF ENGINEER DATE

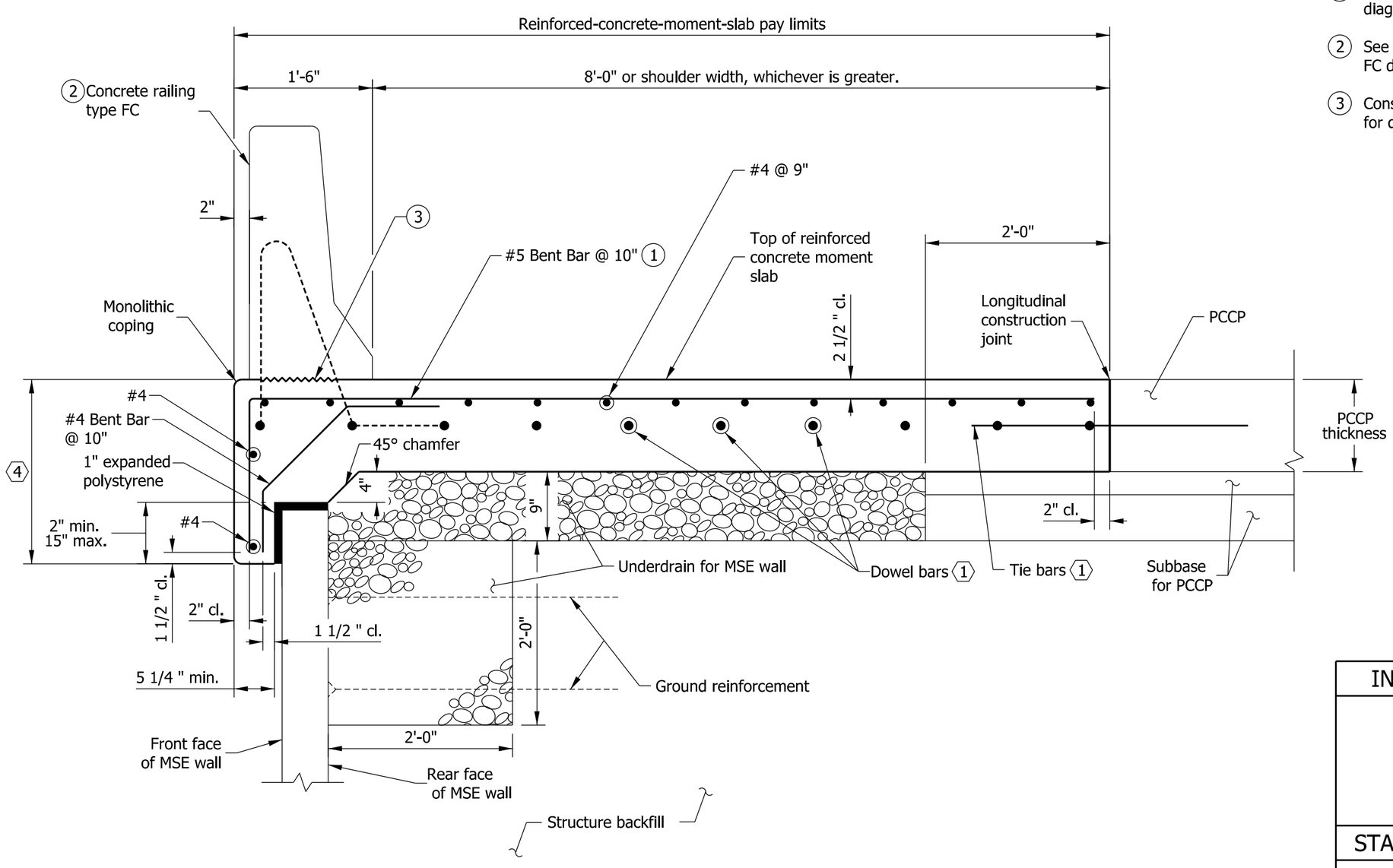

NOTES

1. See Standard Drawing E 706-MSRW-10 for reinforcing-bar diagrams and General Notes ⬡.
2. See Standard Drawing E 706-BRSF-01 for concrete railing type FC details.
3. Construction joint type A. See Standard Drawing E 702-CJTA-01 for details.

INDIANA DEPARTMENT OF TRANSPORTATION

RAILING TYPE FC AND MOMENT SLAB ATOP MSE WALL - PCCP

SEPTEMBER 2012

STANDARD DRAWING NO. E 706-MSRW-05

RICHARD L. VanCLEAVE REGISTERED No. 9750 STATE OF INDIANA PROFESSIONAL ENGINEER

/s/ Richard L. VanCleave 09/04/12
SUPERVISOR, ROADWAY STANDARDS DATE

/s/ Mark A. Miller 09/04/12
CHIEF ENGINEER DATE

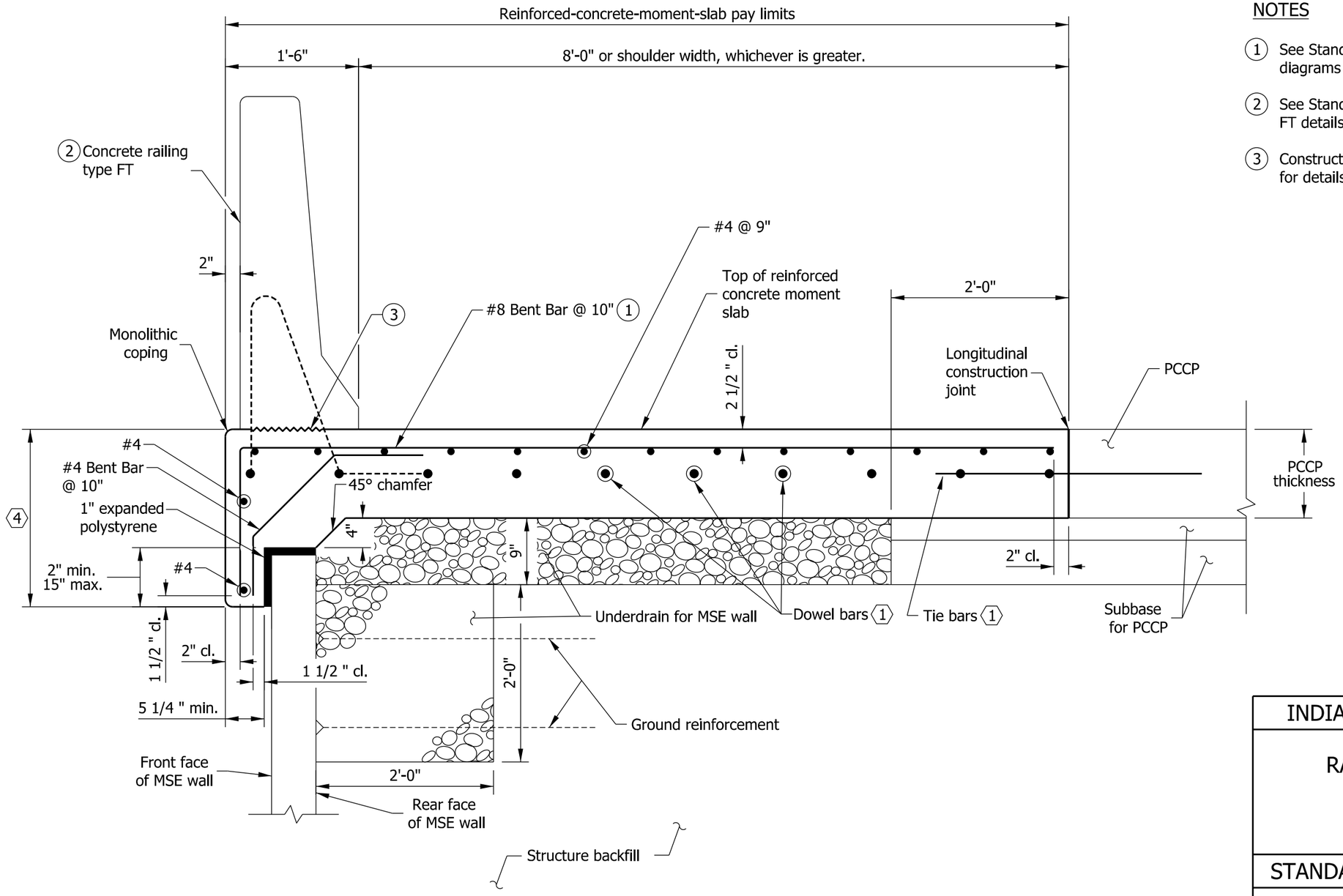

NOTES

1. See Standard Drawing E 706-MSRW-10 for reinforcing-bar diagrams and General Notes ⬡.
2. See Standard Drawing E 706-BRSF-02 for concrete railing type FT details.
3. Construction joint type A. See Standard Drawing E 702-CJTA-01 for details.

INDIANA DEPARTMENT OF TRANSPORTATION

RAILING TYPE FT AND MOMENT SLAB ATOP MSE WALL - PCCP

SEPTEMBER 2012

STANDARD DRAWING NO. E 706-MSRW-06

RICHARD L. VanCLEAVE REGISTERED No. 9750 STATE OF INDIANA PROFESSIONAL ENGINEER

/s/ Richard L. VanCleave 09/04/12
SUPERVISOR, ROADWAY STANDARDS DATE

/s/ Mark A. Miller 09/04/12
CHIEF ENGINEER DATE

NOTES

1. See Standard Drawing E 706-MSRW-10 for reinforcing-bar diagrams and General Notes ⬡.
2. See Standard Drawing E 706-BRSF-01 for concrete railing type FC details.
3. Construction joint type A. See Standard Drawing E 702-CJTA-01 for details.

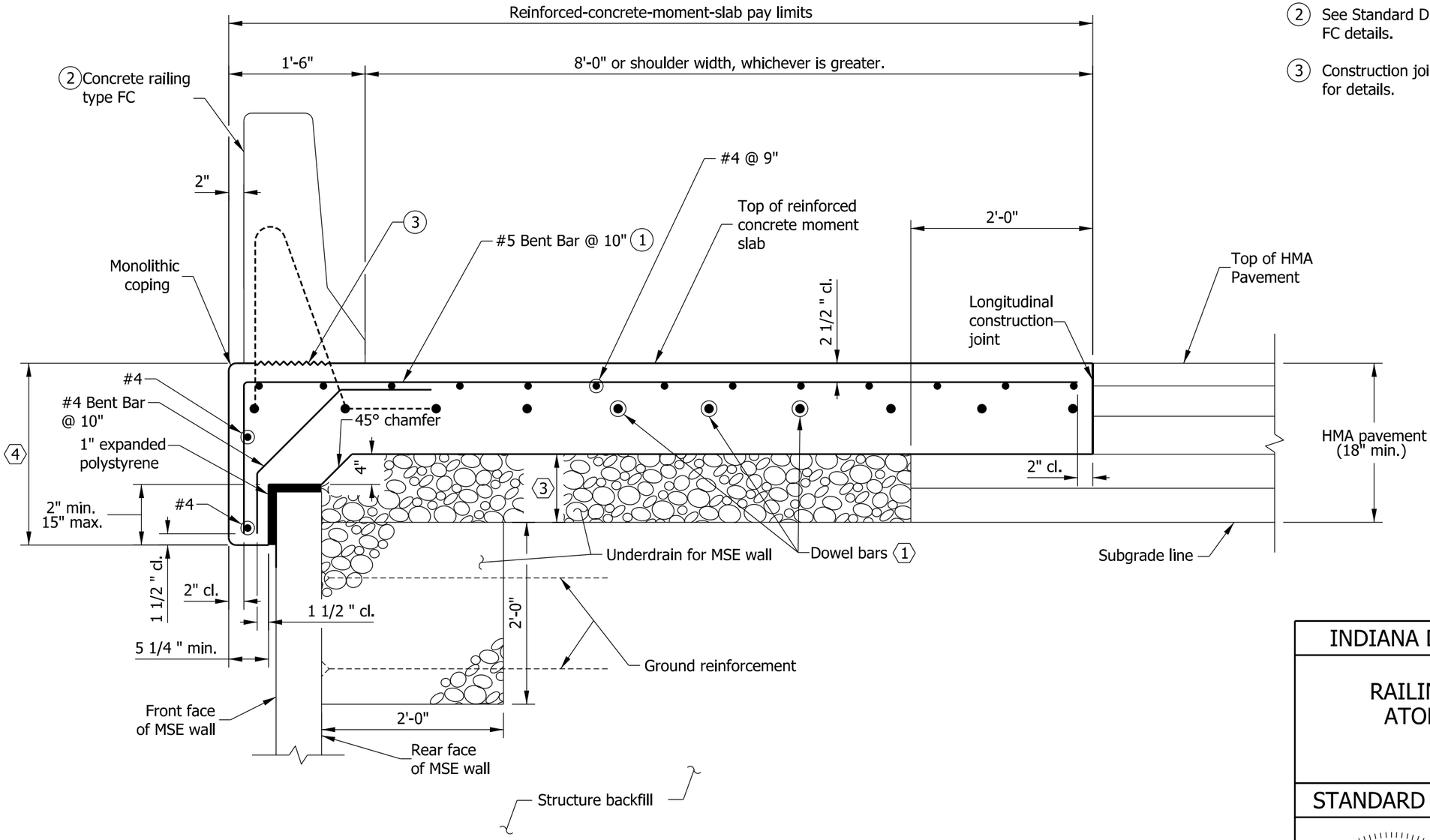

INDIANA DEPARTMENT OF TRANSPORTATION

RAILING TYPE FC AND MOMENT SLAB
ATOP MSE WALL - HMA PAVEMENT

SEPTEMBER 2012

STANDARD DRAWING NO. E 706-MSRW-07

RICHARD L. VanCLEAVE REGISTERED No. 9750 STATE OF INDIANA PROFESSIONAL ENGINEER

/s/ Richard L. VanCleave 09/04/12
SUPERVISOR, ROADWAY STANDARDS DATE

/s/ Mark A. Miller 09/04/12
CHIEF ENGINEER DATE

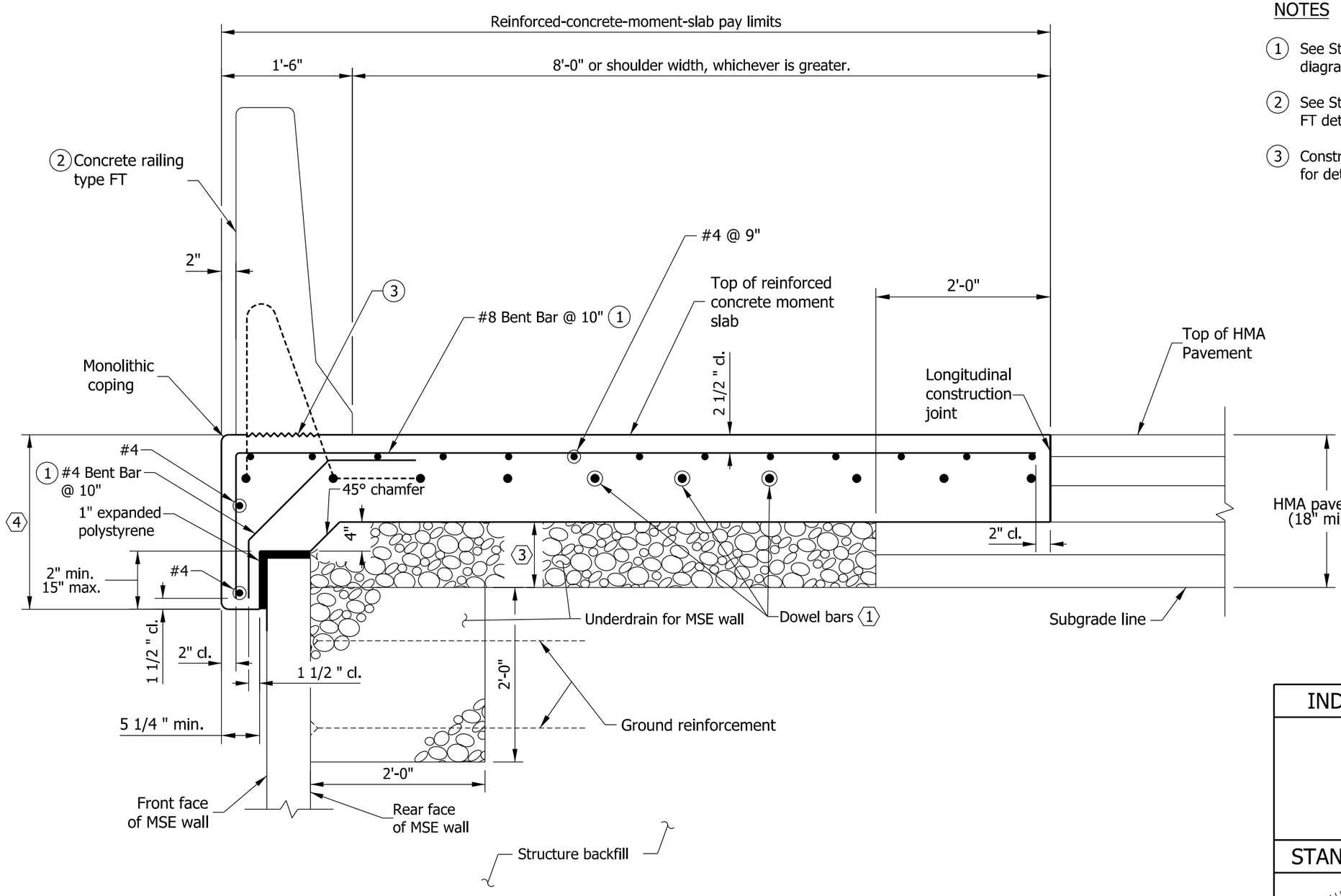

NOTES

1. See Standard Drawing E 706-MSRW-10 for reinforcing-bar diagrams and General Notes ⬡.
2. See Standard Drawing E 706-BRSF-02 for concrete railing type FT details.
3. Construction joint type A. See Standard Drawing E 702-CJTA-01 for details.

INDIANA DEPARTMENT OF TRANSPORTATION

RAILING TYPE FT AND MOMENT SLAB ATOP MSE WALL - HMA PAVEMENT

SEPTEMBER 2012

STANDARD DRAWING NO. E 706-MSRW-08

RICHARD L. VanCLEAVE REGISTERED No. 9750 STATE OF INDIANA PROFESSIONAL ENGINEER

/s/ Richard L. VanCleave 09/04/12
SUPERVISOR, ROADWAY STANDARDS DATE

/s/ Mark A. Miller 09/04/12
CHIEF ENGINEER DATE

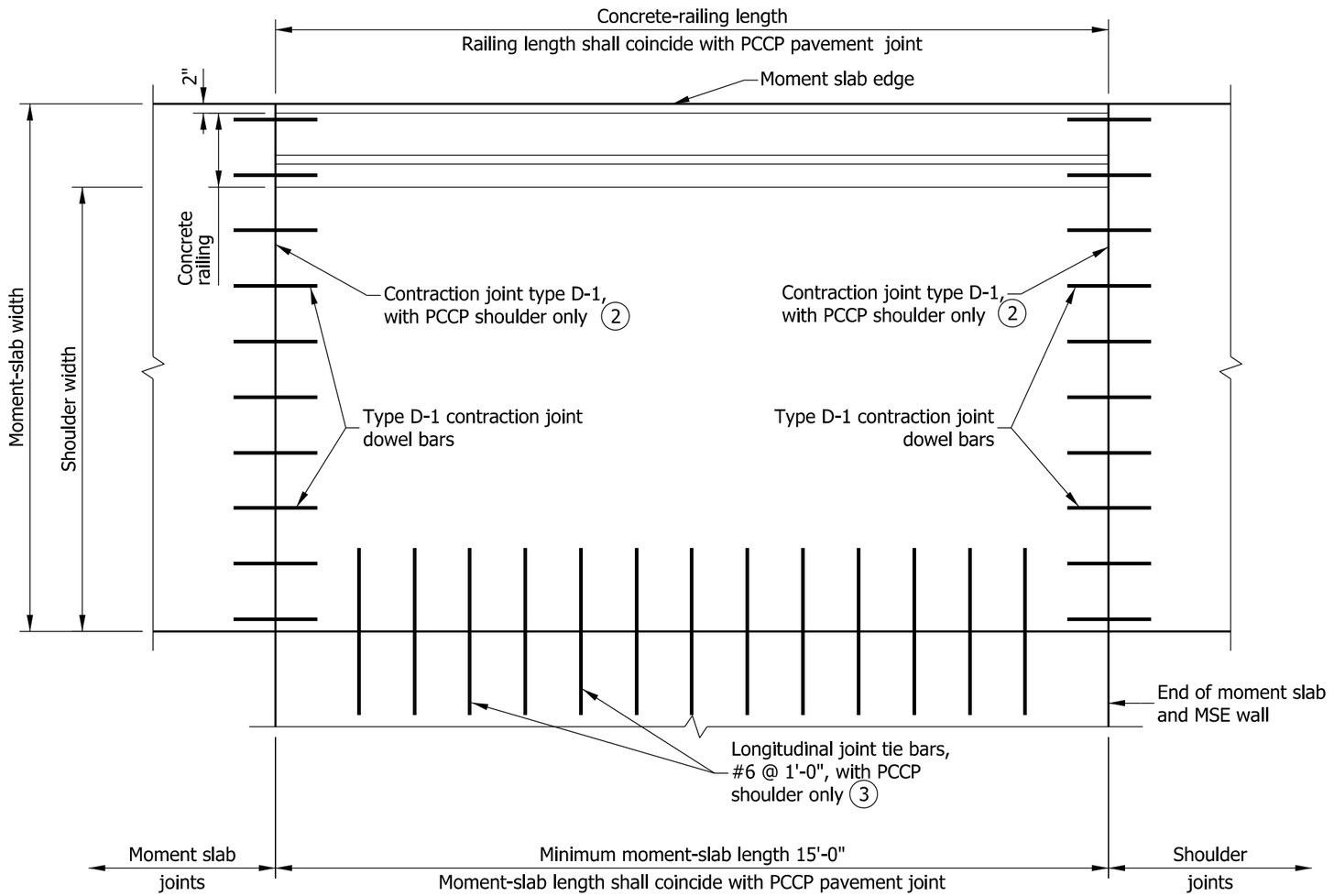

PLAN - REINFORCED CONCRETE MOMENT SLAB JOINTS

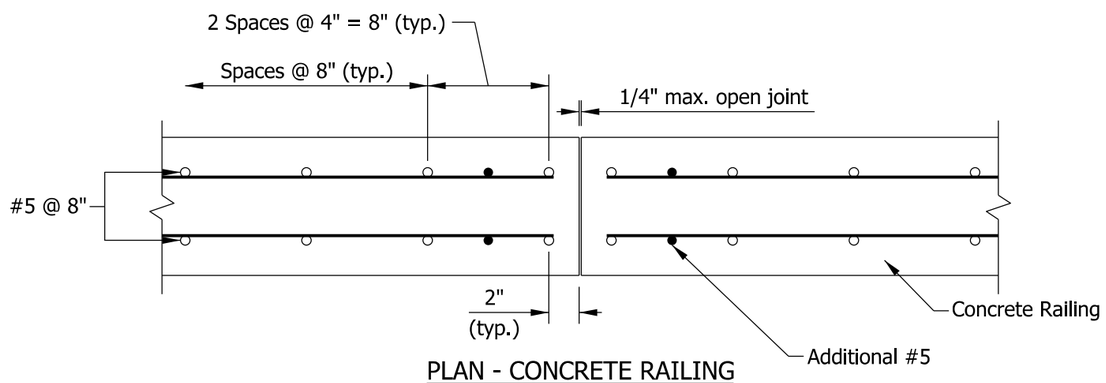

PLAN - CONCRETE RAILING ADDITIONAL VERTICAL STEEL

NOTES

1. Where used with HMA mainline pavement, concrete railing and moment-slab lengths shall coincide and be spaced at 18'-0".

(2) See Standard Drawing E 503-CCPJ-01 for contraction joint type D-1 details.

(3) See Standard Drawing E 503-CCPJ-02 for joint tie bars details.

INDIANA DEPARTMENT OF TRANSPORTATION

MOMENT SLAB JOINTS

SEPTEMBER 2012

STANDARD DRAWING NO. E 706-MSRW-09

RICHARD L. VanCLEAVE REGISTERED No. 9750 STATE OF INDIANA PROFESSIONAL ENGINEER

/s/ Richard L. VanCleave 09/04/12
SUPERVISOR, ROADWAY STANDARDS DATE

/s/ Mark A. Miller 09/04/12
CHIEF ENGINEER DATE

GENERAL NOTES

1. See Standard Drawing E 706-MSRW-09 for plan view and additional reinforcing bars in the railing at the railing joints.
2. See Standard Drawing E 731-MSEW-01 for coping details.
3. The thickness of the coarse aggregate No. 8 shall be equal to the combined thicknesses of the first two lifts of HMA, but not less than 6 in.
4. For moment slab thickness ≤ 15 in., this shall be 2'-0".
   For moment slab thickness > 15 in., this shall be moment-slab thickness plus 12 in.
5. The moment slab shall be used only within the limits of the MSE wall.
6. Reinforcing bars in the moment slab shall be epoxy coated.
7. See Standard Drawing E 703-BRST-01 for reinforcing-bar bending diagrams and notes.

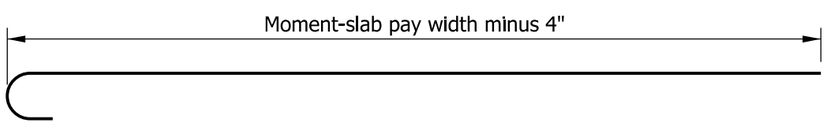

#8 BENT BAR
WITH STANDARD 180° HOOK

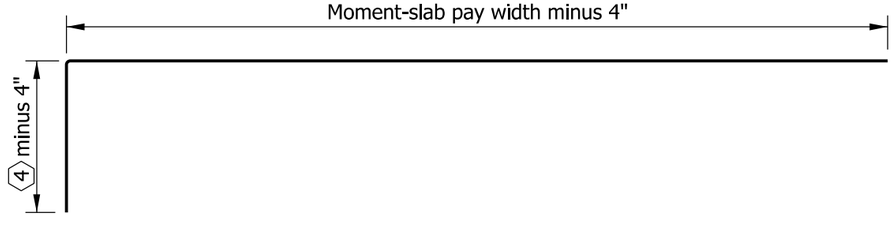

#5 BENT BAR OR #8 BENT BAR
WITH STANDARD 90° BEND

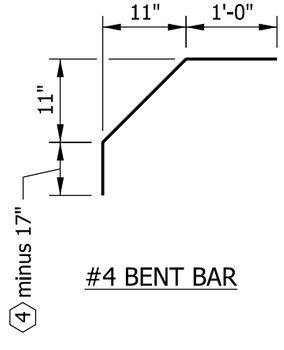

#4 BENT BAR

INDIANA DEPARTMENT OF TRANSPORTATION

RAILING AND MOMENT SLAB
AT MSE WALL

SEPTEMBER 2012

STANDARD DRAWING NO. E 706-MSRW-10

RICHARD L. VanCLEAVE REGISTERED No. 9750 STATE OF INDIANA PROFESSIONAL ENGINEER

/s/ Richard L. VanCleave 09/04/12
SUPERVISOR, ROADWAY STANDARDS DATE

/s/ Mark A. Miller 09/04/12
CHIEF ENGINEER DATE

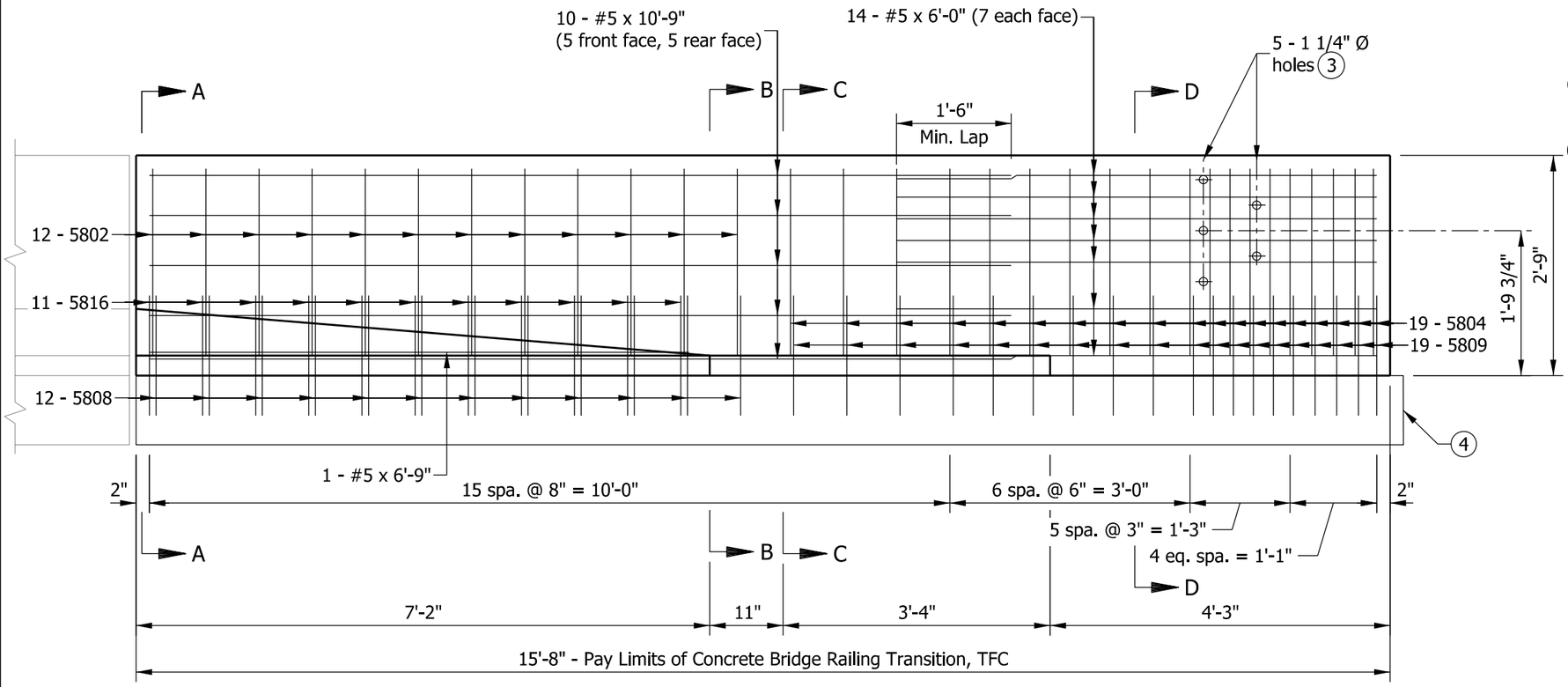

ELEVATION

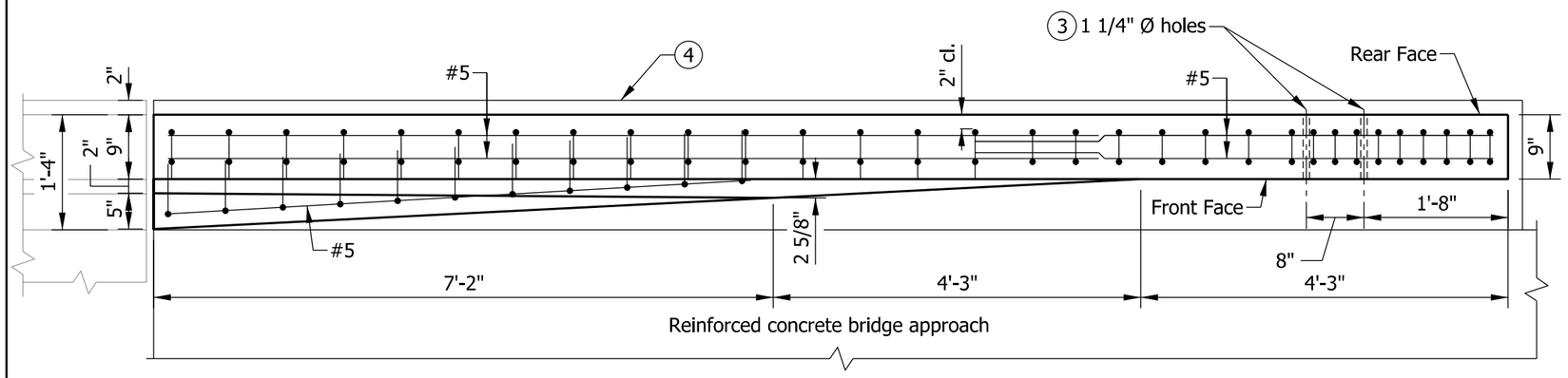

PLAN

NOTES

1. See Standard Drawing E 706-TTFC-02 for sections.
2. See Standard Drawing E 706-TTFC-03 for reinforcing-bar diagrams and bill of materials.

(3) Holes for attachment of guardrail transition type TGB. See Standard Drawing E 706-CBRT-04 for details.

(4) RCBA extension for bridge railing transition type TFC. See Standard Drawing E 609-TBAE-01 for details.

INDIANA DEPARTMENT OF TRANSPORTATION

CONCRETE BRIDGE RAILING
TRANSITION TFC
PLAN AND ELEVATION
SEPTEMBER 2013

STANDARD DRAWING NO. E 706-TTFC-01

ELIZABETH W. PHILLIPS
REGISTERED
No. 10200124
STATE OF INDIANA
PROFESSIONAL ENGINEER

/s/ Elizabeth W. Phillips 02/04/13
DESIGN STANDARDS ENGINEER DATE

/s/ Mark A. Miller 03/27/13
CHIEF ENGINEER DATE

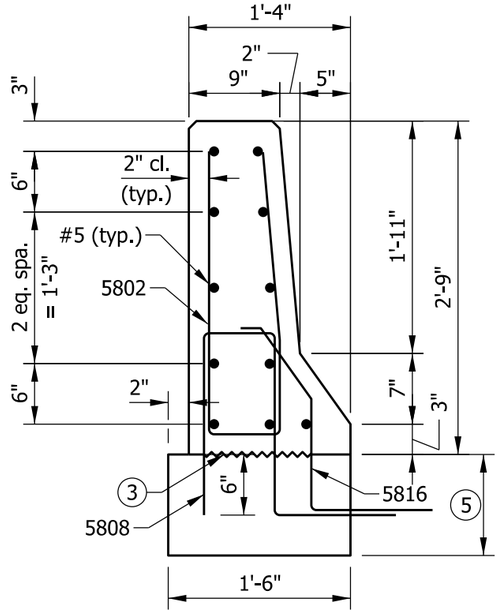

SECTION A-A

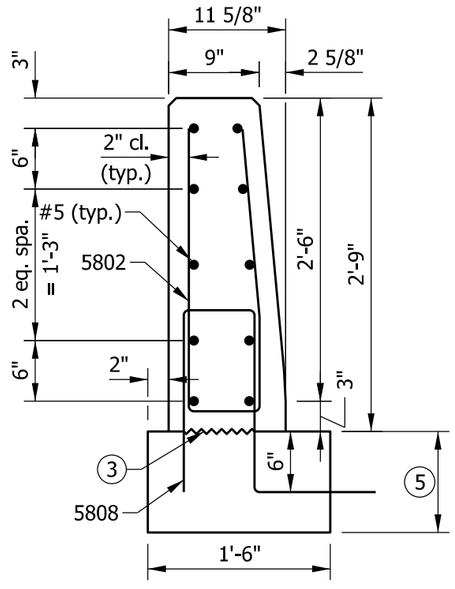

SECTION B-B

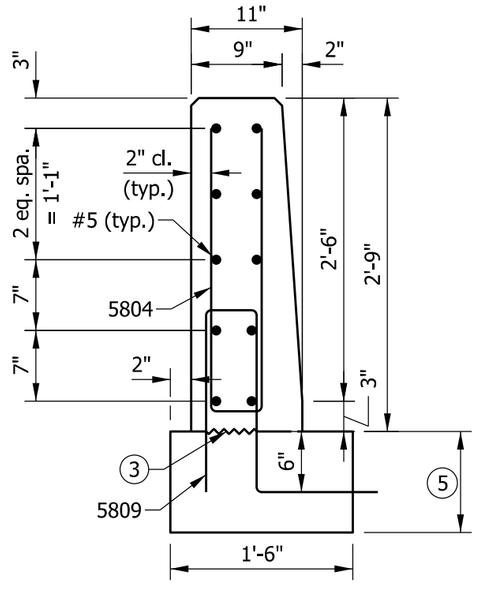

SECTION C-C

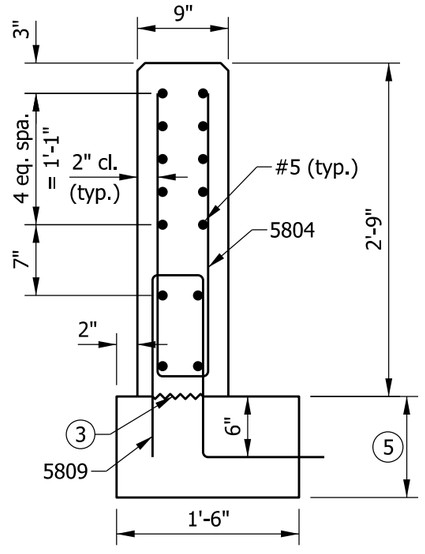

SECTION D-D

NOTES

1. See Standard Drawing E 706-TTFC-01 for elevation and plan.
2. All chamfered edges shall be 3/4".

(3) Construction joint type A. See Standard Drawing E 702-CJTA-01 for details.

4. See Standard Drawing E 706-TTFC-03 for reinforcing-bar diagrams.

(5) RCBA extension for bridge railing type TFC. See Standard Drawing E 609-TBAE-01 for details.

INDIANA DEPARTMENT OF TRANSPORTATION

CONCRETE BRIDGE RAILING
TRANSITION, TFC
SECTIONS

SEPTEMBER 2013

STANDARD DRAWING NO. E 706-TTFC-02

ELIZABETH W. PHILLIPS
REGISTERED
No.
10200124
STATE OF
INDIANA
PROFESSIONAL ENGINEER

/s/ Elizabeth W. Phillips 02/04/13
DESIGN STANDARDS ENGINEER DATE

/s/ Mark A. Miller 03/27/13
CHIEF ENGINEER DATE

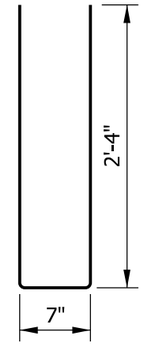

5802 x 5'-3"

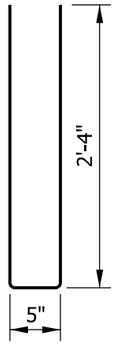

5804 x 5'-1"

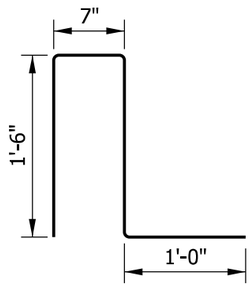

5808 x 4'-7"

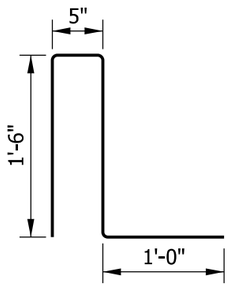

5809 x 4'-5"

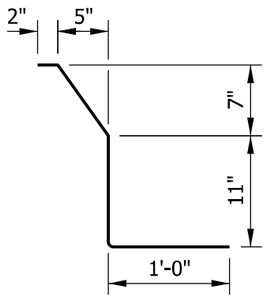

5816 x 2'-10"

NOTE

1. See Standard Drawing E 703-BRST-01 for reinforcing-bar bending details and notes.

BILL OF MATERIALS			
Quantities are for one concrete bridge railing transition type TFC			
EPOXY-COATED REINFORCING STEEL			
MARK OR SIZE	NO. OF BARS	LENGTH	WEIGHT
5802	12	5'-3"	
5804	19	5'-1"	
5808	12	4'-7"	
5809	19	4'-5"	
5816	11	2'-10"	
#5	10	10'-9"	
#5	1	6'-9"	
#5	14	6'-0"	
Total Epoxy-Coated Reinforcing Steel			551 LBS
MISCELLANEOUS			
Concrete, Class C			1.2 CYS
Surface Seal			100 SFT

INDIANA DEPARTMENT OF TRANSPORTATION

CONCRETE BRIDGE RAILING TRANSITION, TFC

SEPTEMBER 2013

STANDARD DRAWING NO. E 706-TTFC-03

ELIZABETH W. PHILLIPS
REGISTERED
No. 10200124
STATE OF INDIANA
PROFESSIONAL ENGINEER

/s/ Elizabeth W. Phillips 02/04/13
DESIGN STANDARDS ENGINEER DATE

/s/ Mark A. Miller 03/27/13
CHIEF ENGINEER DATE

NOTES

1. See Standard Drawing E 706-TTFT-02 for sections.
2. See Standard Drawing E 706-TTFT-03 for reinforcing-bar diagrams and bill of materials.

(3) Holes for attachment of guardrail transition type TGB. See Standard Drawing E 601-TTGB-01 for details.

(4) RCBA extension for bridge railing transition type TFT. See Standard Drawing E 609-TBAE-02 for details.

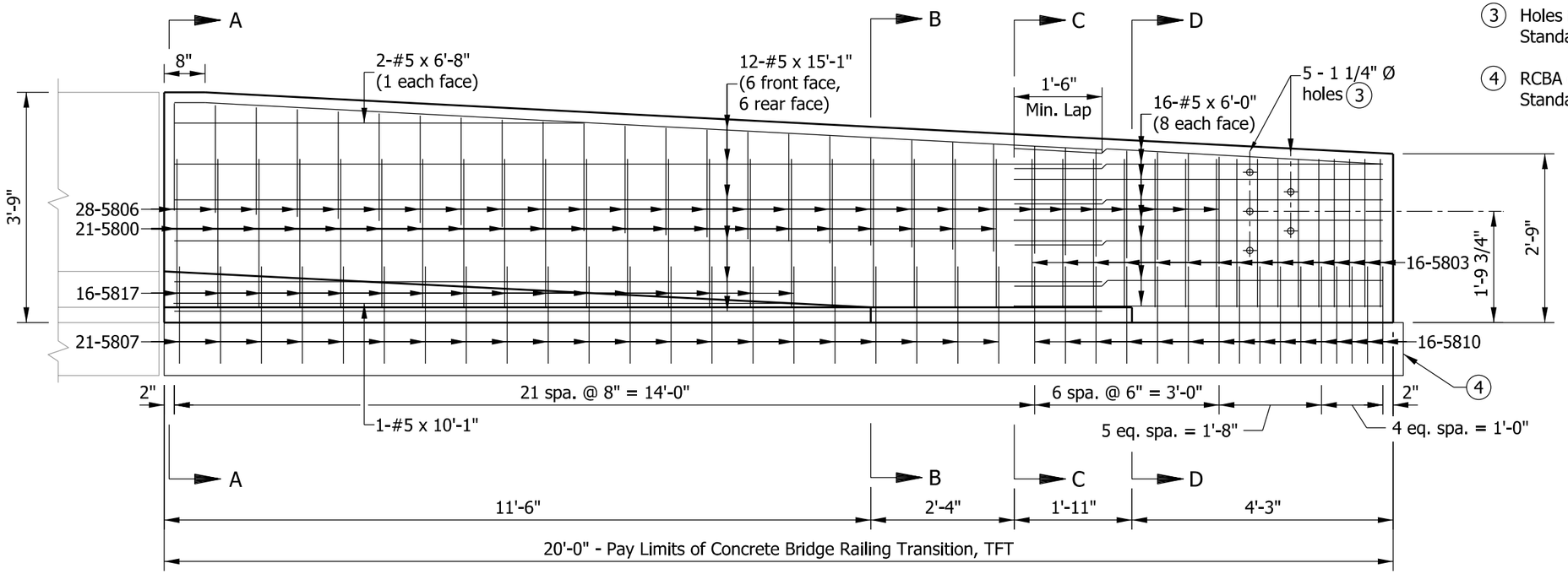

ELEVATION

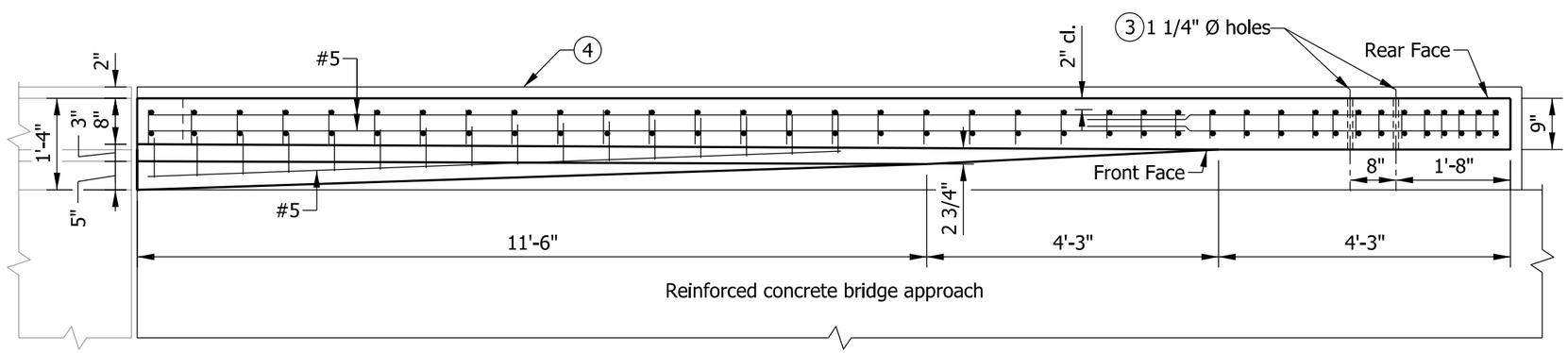

PLAN

INDIANA DEPARTMENT OF TRANSPORTATION

CONCRETE BRIDGE RAILING
TRANSITION TFT
PLAN AND ELEVATION
SEPTEMBER 2012

STANDARD DRAWING NO. E 706-TTFT-01

RICHARD L. VanCLEAVE
REGISTERED
No. 9750
STATE OF INDIANA
PROFESSIONAL ENGINEER

/s/ Richard L. VanCleave 09/04/12
SUPERVISOR, ROADWAY STANDARDS DATE

/s/ Mark A. Miller 09/04/12
CHIEF ENGINEER DATE

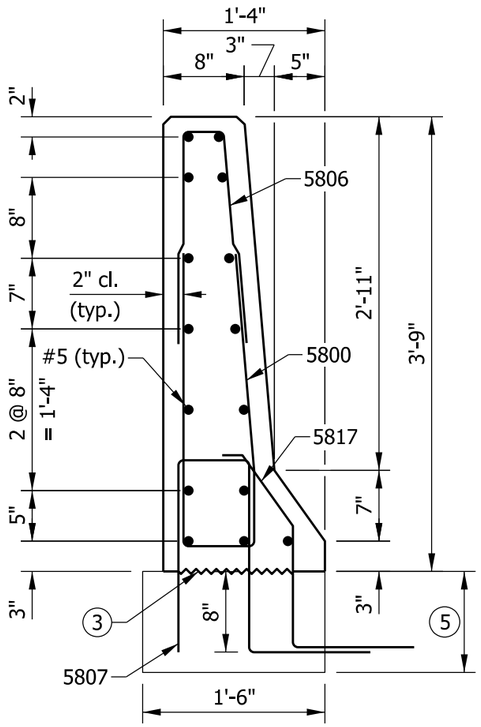

SECTION A-A

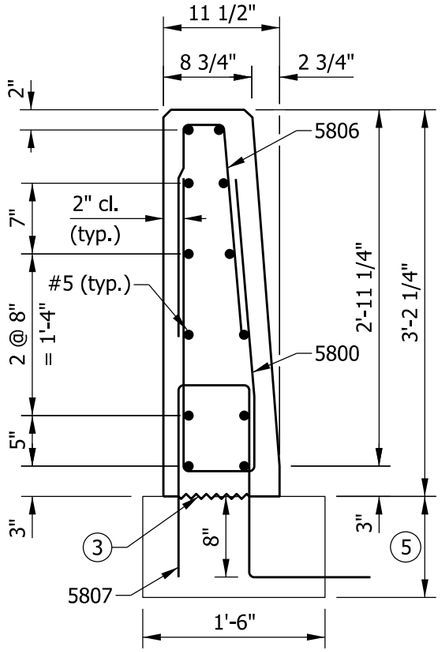

SECTION B-B

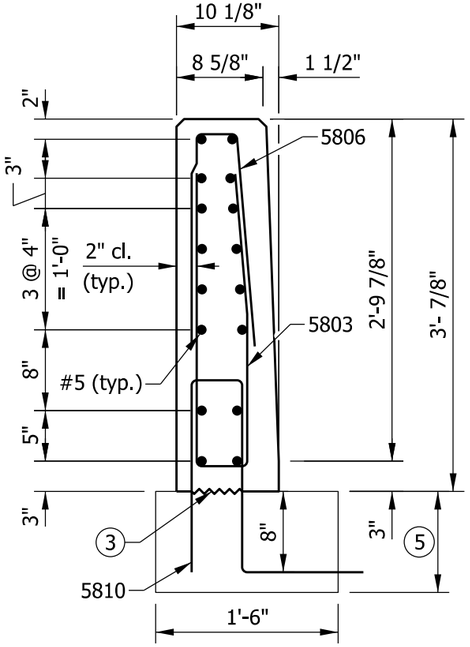

SECTION C-C

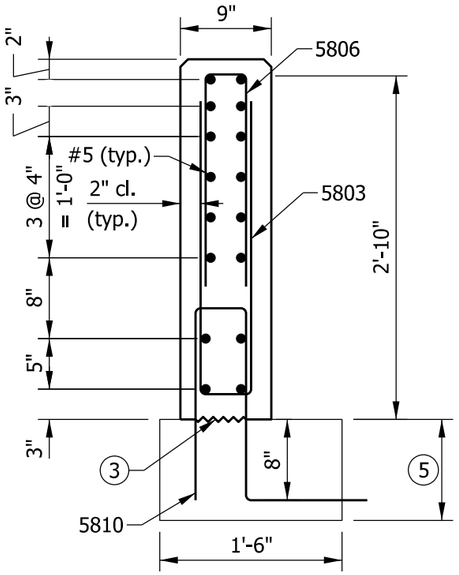

SECTION D-D

NOTES

1. See Standard Drawing E 706-TTFT-01 for elevation and plan.
2. All chamfered edges shall be 3/4".

(3) Construction joint type A. See Standard Drawing E 702-CJTA-01 for details.

4. See Standard Drawing E 706-TTFT-03 for reinforcing-bar diagrams.

(5) RCBA extension for bridge railing transition type TFT. See Standard Drawing E 609-TBAE-02 for details.

INDIANA DEPARTMENT OF TRANSPORTATION

CONCRETE BRIDGE RAILING
TRANSITION, TFT

SEPTEMBER 2012

STANDARD DRAWING NO. E 706-TTFT-02

RICHARD L. VanCLEAVE
REGISTERED
No. 9750
STATE OF INDIANA
PROFESSIONAL ENGINEER

/s/ Richard L. VanCleave 09/04/12
SUPERVISOR, ROADWAY STANDARDS DATE

/s/ Mark A. Miller 09/04/12
CHIEF ENGINEER DATE

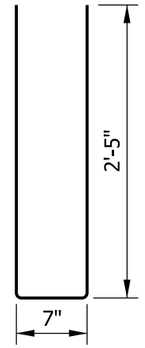

5800 x 5'-5"

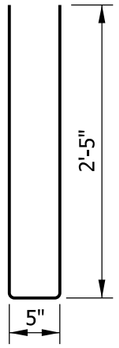

5803 x 5'-3"

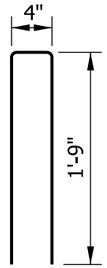

5806 x 3'-10"

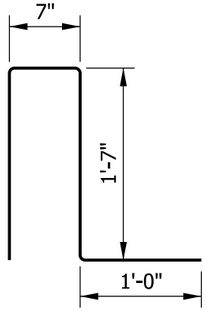

5807 x 4'-9"

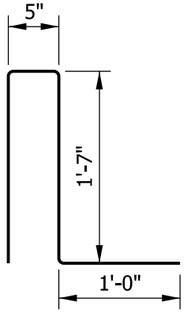

5810 x 4'-7"

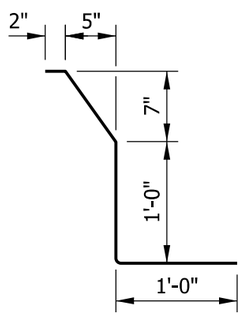

5817 x 3'-0"

NOTE

1. See Standard Drawing E 703-BRST-01 for reinforcing-bar bending details and notes.

BILL OF MATERIALS			
Quantities are for one concrete bridge railing transition type TFT			
EPOXY-COATED REINFORCING STEEL			
MARK OR SIZE	NO. OF BARS	LENGTH	WEIGHT
5800	21	5'-5"	
5803	16	5'-3"	
5806	28	3'-10"	
5807	21	4'-9"	
5810	16	4'-7"	
5817	16	3'-0"	
#5	12	15'-1"	
#5	1	10'-1"	
#5	2	6'-8"	
#5	16	6'-0"	
Total Epoxy-Coated Reinforcing Steel			862 LBS
MISCELLANEOUS			
Concrete, Class C			2.0 CYS
Surface Seal			13.4 SYS

INDIANA DEPARTMENT OF TRANSPORTATION

CONCRETE BRIDGE RAILING TRANSITION TYPE TFT

SEPTEMBER 2012

STANDARD DRAWING NO. E 706-TTFT-03

RICHARD L. VanCLEAVE REGISTERED No. 9750 STATE OF INDIANA PROFESSIONAL ENGINEER

/s/ Richard L. VanCleave 09/04/12
SUPERVISOR, ROADWAY STANDARDS DATE

/s/ Mark A. Miller 09/04/12
CHIEF ENGINEER DATE

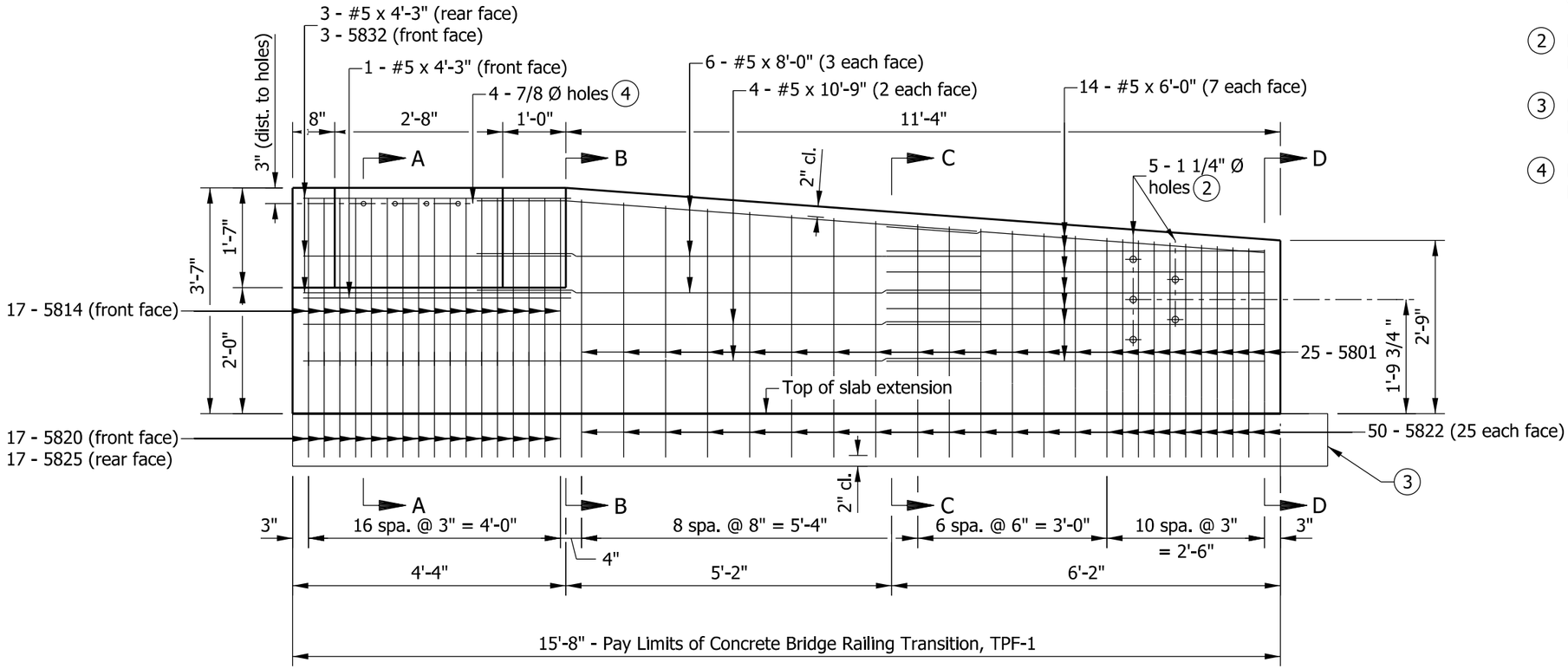

ELEVATION

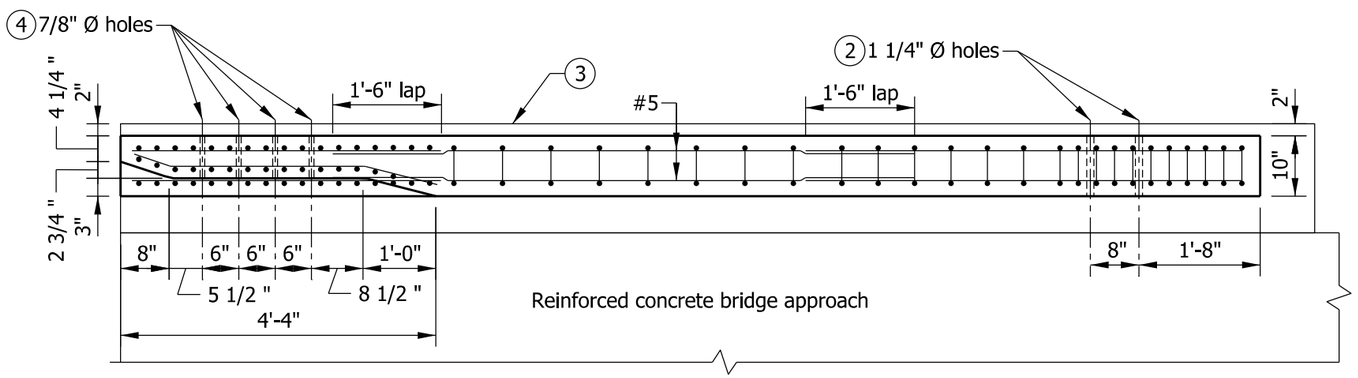

PLAN

NOTES

1. See Standard Drawing E 706-TTPP-02 for sections and reinforcing bar diagrams.

(2) Holes for attachment of guardrail transition type TGB. See Standard Drawing E 706-CBRT-04 for details.

(3) RCBA extension for bridge railing transition type TPF-1. See Standard Drawing E 609-TBAE-01 for details.

(4) Holes for attachment of steel bridge railing type PF-1. See Standard Drawing E 706-BRPP-01 for details.

BILL OF MATERIALS			
Quantities are for one concrete bridge railing transition type TPF-1.			
EPOXY-COATED REINFORCING STEEL			
MARK OR SIZE	NO. OF BARS	LENGTH	WEIGHT
5801	25	5'-4"	
5814	17	3'-0"	
5820	17	3'-1"	
5822	50	3'-7"	
5825	17	4'-8"	
5832	3	4'-3"	
#5	4	10'-9"	
#5	6	8'-0"	
#5	14	6'-0"	
#5	4	4'-3"	
Total Epoxy-Coated Reinforcing Steel			730 LBS
MISCELLANEOUS			
Concrete, Class C			1.5 CYS
Surface Seal			119 SFT

INDIANA DEPARTMENT OF TRANSPORTATION

CONCRETE BRIDGE RAILING TRANSITION, TPF-1

SEPTEMBER 2012

STANDARD DRAWING NO. E 706-TTPP-01

RICHARD L. VanCLEAVE REGISTERED No. 9750 STATE OF INDIANA PROFESSIONAL ENGINEER

/s/ Richard L. VanCleave 09/04/12
SUPERVISOR, ROADWAY STANDARDS DATE

/s/ Mark A. Miller 09/04/12
CHIEF ENGINEER DATE

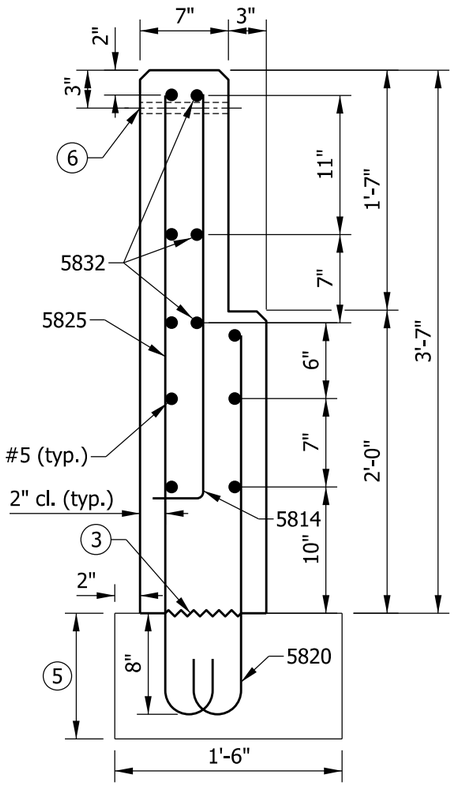

SECTION A-A

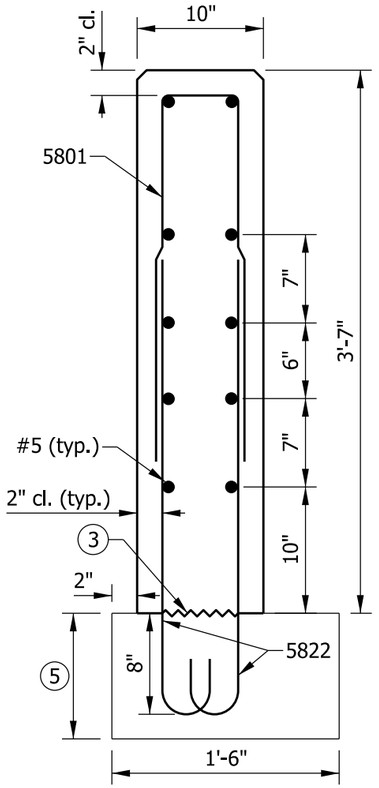

SECTION B-B

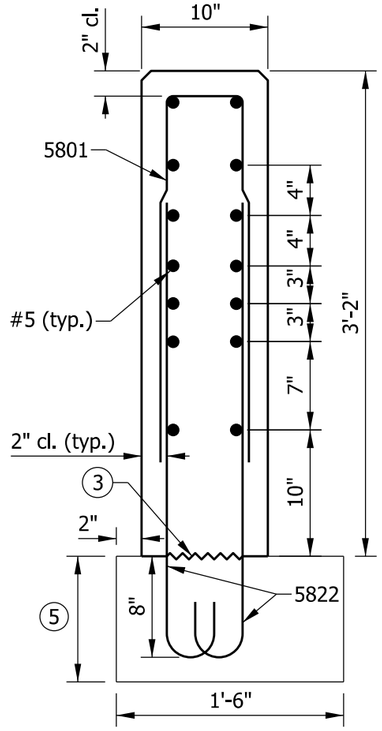

SECTION C-C

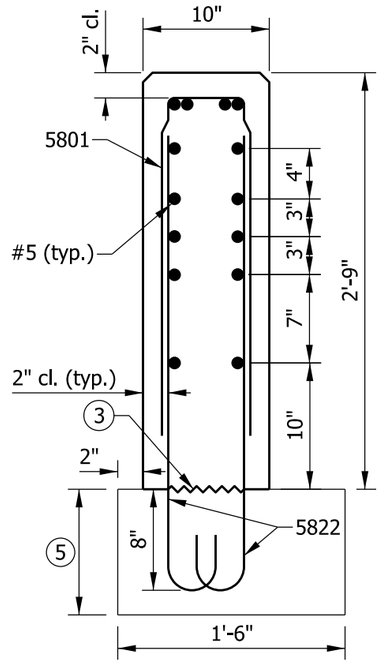

SECTION D-D

NOTES

1. See Standard Drawing E 706-TTPP-01 for elevation and plan.
2. All chamfered edges shall be 3/4".

(3) Construction joint type A. See Standard Drawing E 702-CJTA-01 for details.

4. See Standard Drawing E 703-BRST-01 for reinforcing-bar bending details and notes.

(5) RCBA extension for bridge railing transition type TPF-1. See Standard Drawing E 609-TBAE-01 details.

(6) 7/8" Ø hole for attachment of steel bridge railing type PF-1. See Standard Drawing E 706-BRPP-01 for details.

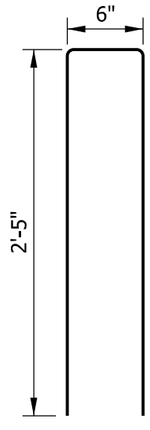

5801 x 5'-4"

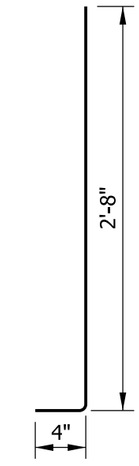

5814 x 3'-0"

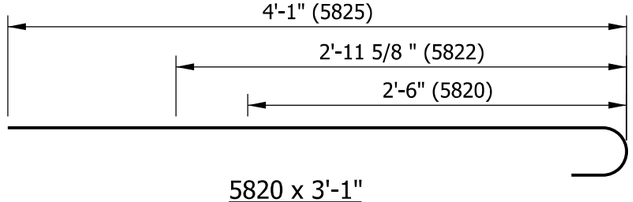

5820 x 3'-1"
5822 x 3'-7"
5825 x 4'-8"

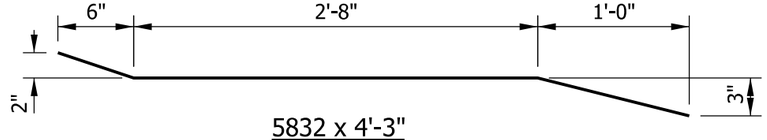

5832 x 4'-3"

INDIANA DEPARTMENT OF TRANSPORTATION

CONCRETE BRIDGE RAILING
TRANSITION, TPF-1

SEPTEMBER 2012

STANDARD DRAWING NO. E 706-TTPP-02

RICHARD L. VanCLEAVE REGISTERED No. 9750 STATE OF INDIANA PROFESSIONAL ENGINEER

/s/ Richard L. VanCleave 09/04/12
SUPERVISOR, ROADWAY STANDARDS DATE

/s/ Mark A. Miller 09/04/12
CHIEF ENGINEER DATE

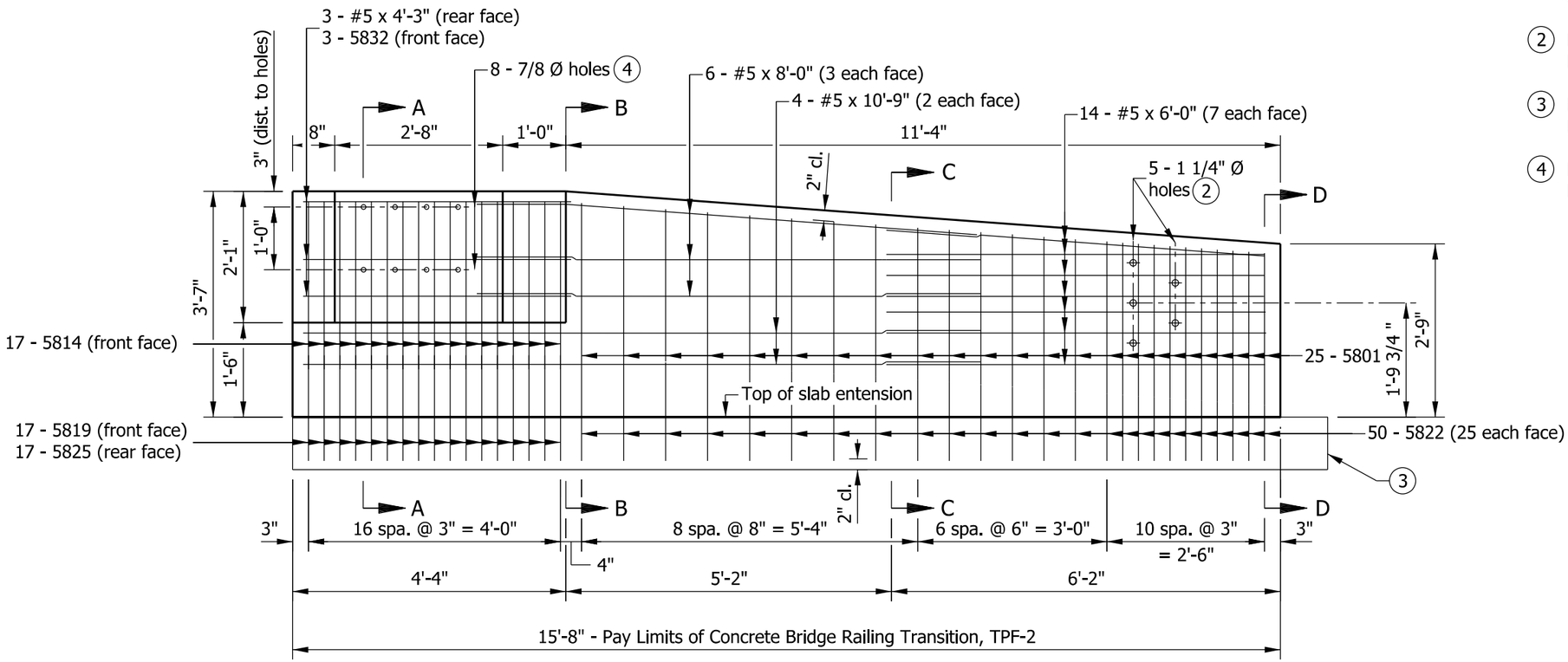

ELEVATION

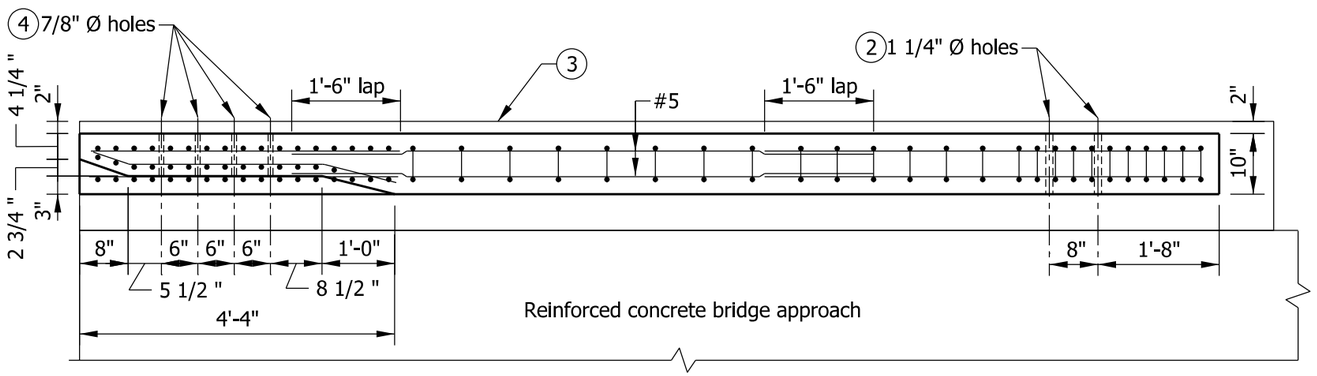

PLAN

NOTES

1. See Standard Drawing E 706-TTPP-04 for sections and reinforcing bar diagrams.

(2) Holes for attachment of guardrail transition type TGB. See Standard Drawing E 706-CBRT-04 for details.

(3) RCBA extension for bridge railing transition type TPF-2. See Standard Drawing E 609-TBAE-01 for details.

(4) Holes for attachment of steel bridge railing type PF-2. See Standard Drawing E 706-BRPP-02 for details.

BILL OF MATERIALS			
Quantities are for one concrete bridge railing transition type TPF-2.			
EPOXY-COATED REINFORCING STEEL			
MARK OR SIZE	NO. OF BARS	LENGTH	WEIGHT
5801	25	5'-4"	
5814	17	3'-0"	
5819	17	2'-7"	
5822	50	3'-7"	
5825	17	4'-8"	
5832	3	4'-3"	
#5	4	10'-9"	
#5	6	8'-0"	
#5	14	6'-0"	
#5	3	4'-3"	
Total Epoxy-Coated Reinforcing Steel			717 LBS
MISCELLANEOUS			
Concrete, Class C			1.5 CYS
Surface Seal			119 SFT

INDIANA DEPARTMENT OF TRANSPORTATION

CONCRETE BRIDGE RAILING TRANSITION, TPF-2

SEPTEMBER 2012

STANDARD DRAWING NO. E 706-TTPP-03

RICHARD L. VanCLEAVE REGISTERED No. 9750 STATE OF INDIANA PROFESSIONAL ENGINEER

/s/ Richard L. VanCleave 09/04/12
SUPERVISOR, ROADWAY STANDARDS DATE

/s/ Mark A. Miller 09/04/12
CHIEF ENGINEER DATE

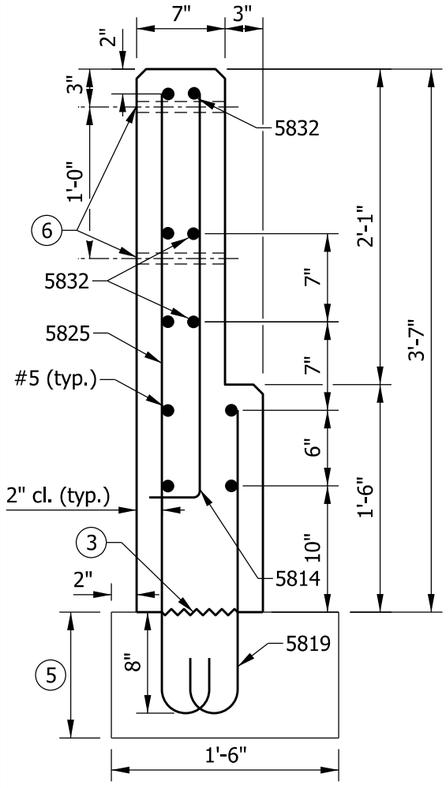

SECTION A-A

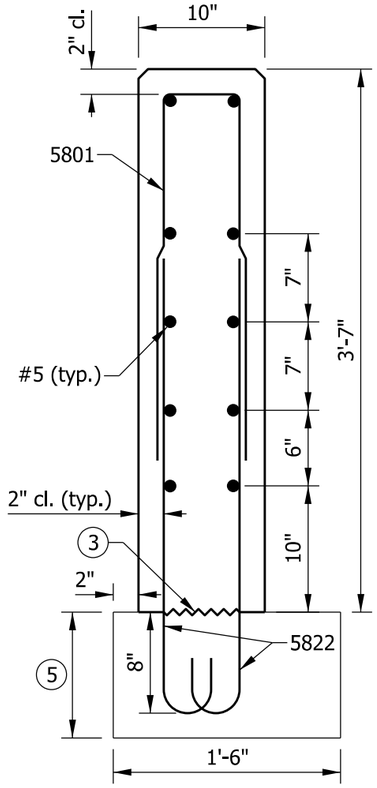

SECTION B-B

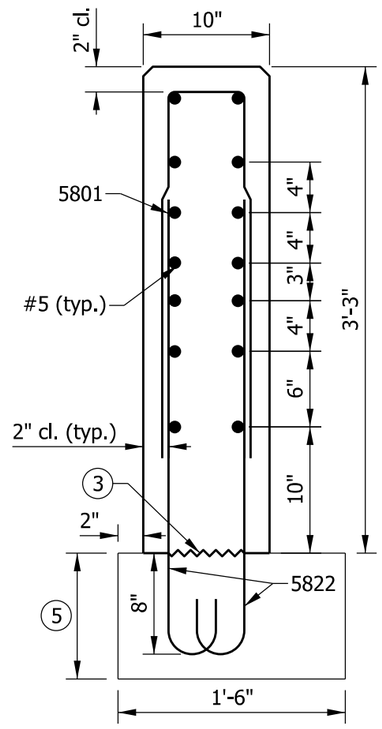

SECTION C-C

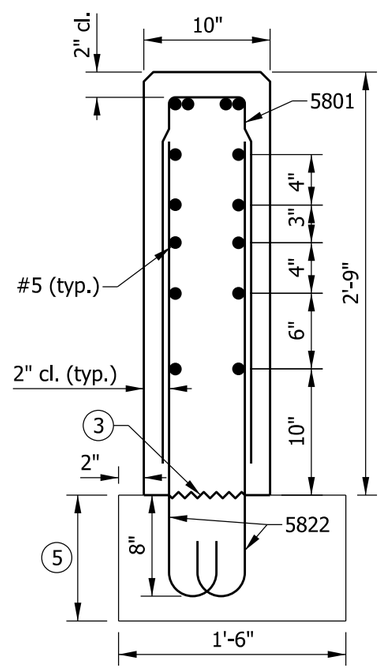

SECTION D-D

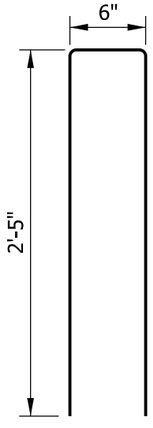

5801 x 5'-4"

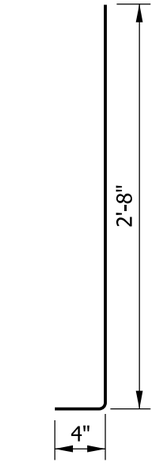

5814 x 3'-0"

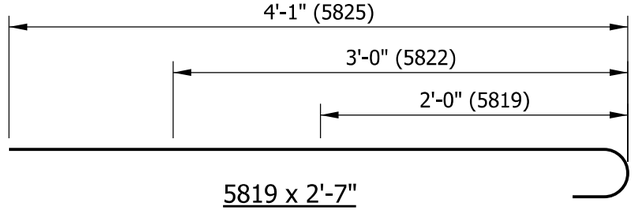

5819 x 2'-7"
5822 x 3'-7"
5825 x 4'-8"

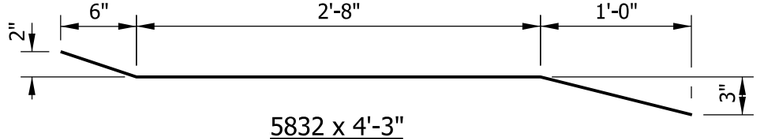

5832 x 4'-3"

NOTES

1. See Standard Drawing E 706-TTPP-03 for elevation and plan.
2. All chamfered edges shall be 3/4".
3. Construction joint type A. See Standard Drawing E 702-CJTA-01 for details.
4. See Standard Drawing E 703-BRST-01 for reinforcing-bar bending details and notes.
5. RCBA extension for bridge railing transition type TPF-2. See Standard Drawing E 609-TBAE-01 for details.
6. 7/8" Ø hole for attachment of steel bridge railing type PF-2. See Standard Drawing E 706-BRPP-02 for details.

INDIANA DEPARTMENT OF TRANSPORTATION

CONCRETE BRIDGE RAILING TRANSITION, TPF-2

SEPTEMBER 2012

STANDARD DRAWING NO. E 706-TTPP-04

RICHARD L. VanCLEAVE REGISTERED No. 9750 STATE OF INDIANA PROFESSIONAL ENGINEER

/s/ Richard L. VanCleave 09/04/12
SUPERVISOR, ROADWAY STANDARDS DATE

/s/ Mark A. Miller 09/04/12
CHIEF ENGINEER DATE

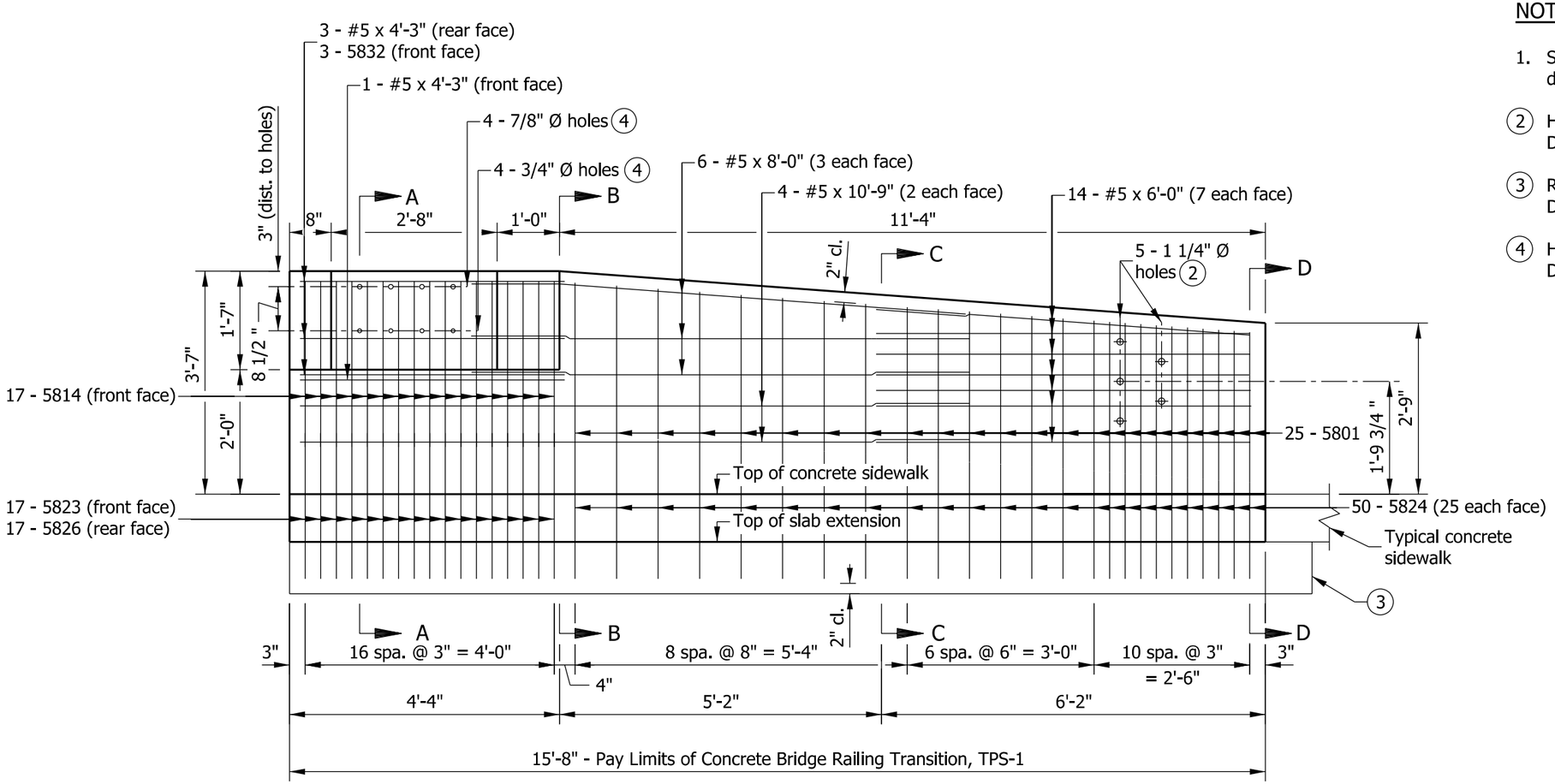

ELEVATION

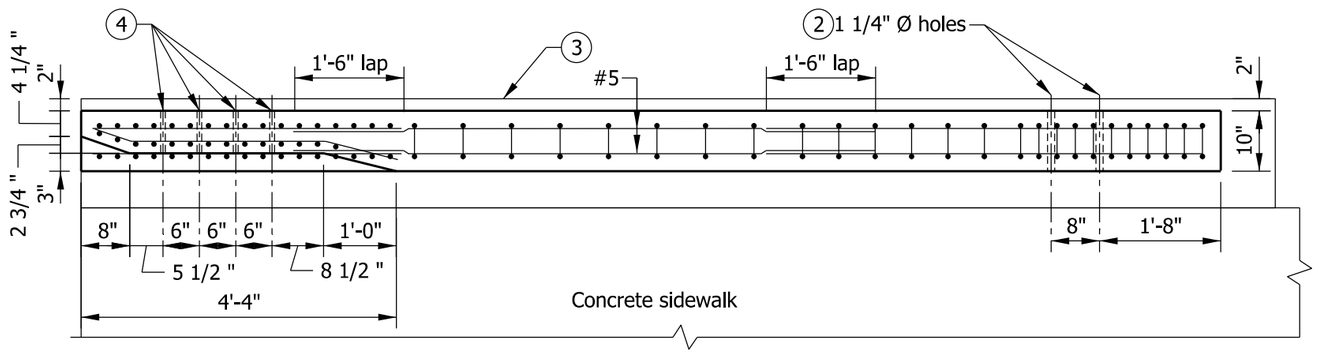

PLAN

NOTES

1. See Standard Drawing E 706-TTPP-06 for sections and reinforcing bar diagrams.

(2) Holes for attachment of guardrail transition type TGB. See Standard Drawing E 706-CBRT-04 for details.

(3) RCBA extension for bridge railing transition type TPS-1. See Standard Drawing E 609-TBAE-01 for details.

(4) Holes for attachment of steel bridge railing type PS-1. See Standard Drawing E 706-BRPP-03 for details.

BILL OF MATERIALS			
Quantities are for one concrete bridge railing transition type TPS-1.			
EPOXY-COATED REINFORCING STEEL			
MARK OR SIZE	NO. OF BARS	LENGTH	WEIGHT
5801	25	5'-4"	
5814	17	3'-0"	
5823	17	3'-9"	
5824	50	4'-3"	
5826	17	5'-4"	
5832	3	4'-3"	
#5	4	10'-9"	
#5	6	8'-0"	
#5	14	6'-0"	
#5	4	4'-3"	
Total Epoxy-Coated Reinforcing Steel			789 LBS
MISCELLANEOUS			
Concrete, Class C			1.9 CYS
Surface Seal			131 SFT

INDIANA DEPARTMENT OF TRANSPORTATION

CONCRETE BRIDGE RAILING TRANSITION, TPS-1

SEPTEMBER 2012

STANDARD DRAWING NO. E 706-TTPP-05

RICHARD L. VanCLEAVE REGISTERED No. 9750 STATE OF INDIANA PROFESSIONAL ENGINEER

/s/ Richard L. VanCleave 09/04/12
SUPERVISOR, ROADWAY STANDARDS DATE

/s/ Mark A. Miller 09/04/12
CHIEF ENGINEER DATE

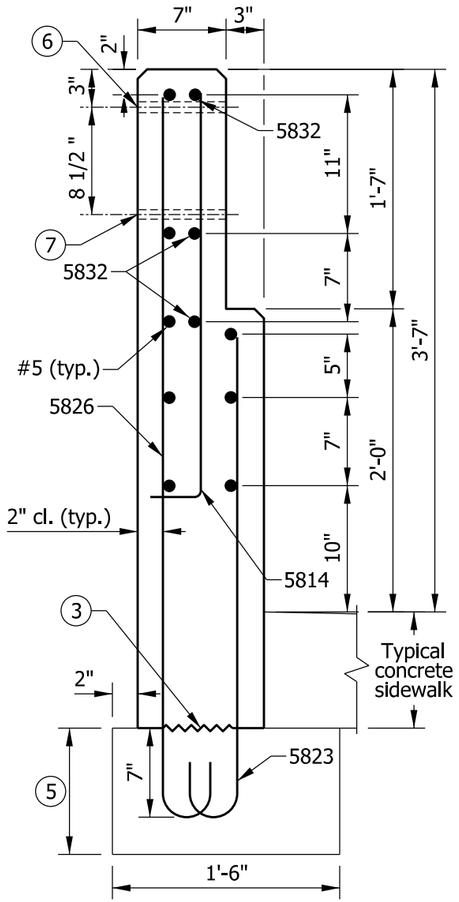

SECTION A-A

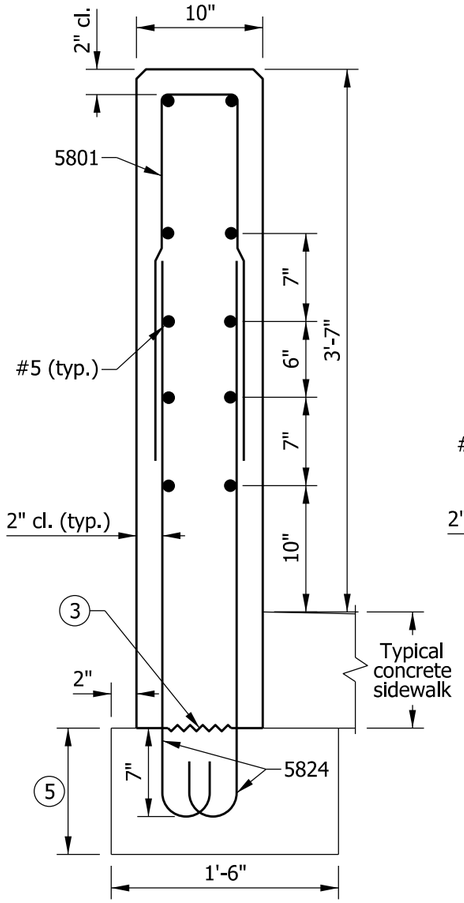

SECTION B-B

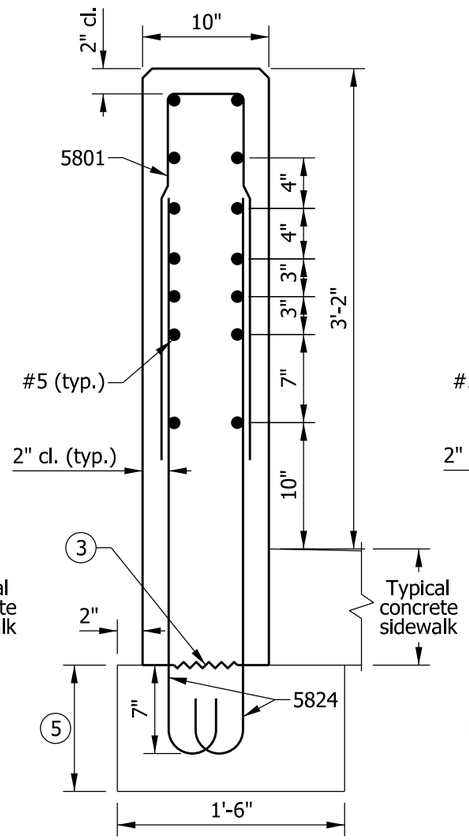

SECTION C-C

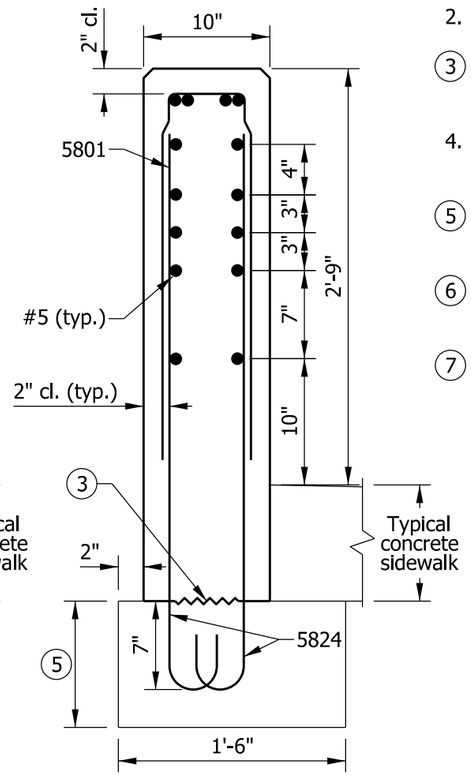

SECTION D-D

NOTES

1. See Standard Drawing E 706-TTPP-05 for elevation and plan.
2. All chamfered edges shall be 3/4".

(3) Construction joing type A. See Standard Drawing E 702-CJTA-01 for details.

4. See Standard Drawing E 703-BRST-01 for reinforcing-bar bending details and notes.

(5) RCBA extension for bridge railing transition type TPS-1. See Standard Drawing E 609-TBAE-01 for details.

(6) 7/8" Ø hole for attachment of steel bridge railing type PS-1, large rail. See Standard Drawing E 706-BRPP-03 for details.

(7) 3/4" Ø hole for attachment of steel bridge railing type PS-1, small rail. See Standard Drawing E 706-BRPP-03 for details.

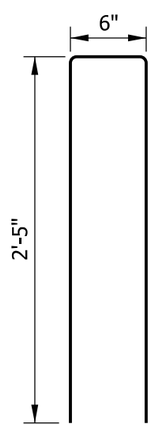

5801 x 5'-4"

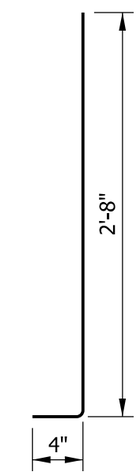

5814 x 3'-0"

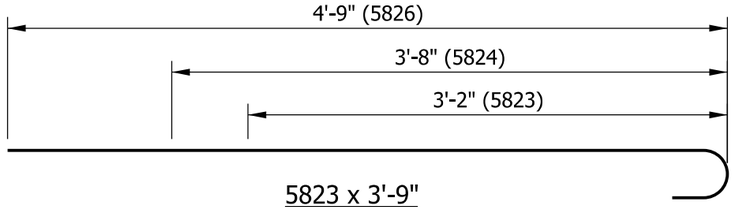

5823 x 3'-9"
5824 x 4'-3"
5826 x 5'-4"

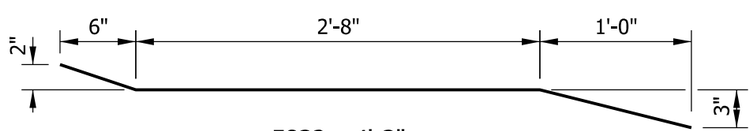

5832 x 4'-3"

INDIANA DEPARTMENT OF TRANSPORTATION

CONCRETE BRIDGE RAILING TRANSITION, TPS-1

SEPTEMBER 2012

STANDARD DRAWING NO. E 706-TTPP-06

RICHARD L. VanCLEAVE REGISTERED No. 9750 STATE OF INDIANA PROFESSIONAL ENGINEER

/s/ Richard L. VanCleave 09/04/12
SUPERVISOR, ROADWAY STANDARDS DATE

/s/ Mark A. Miller 09/04/12
CHIEF ENGINEER DATE

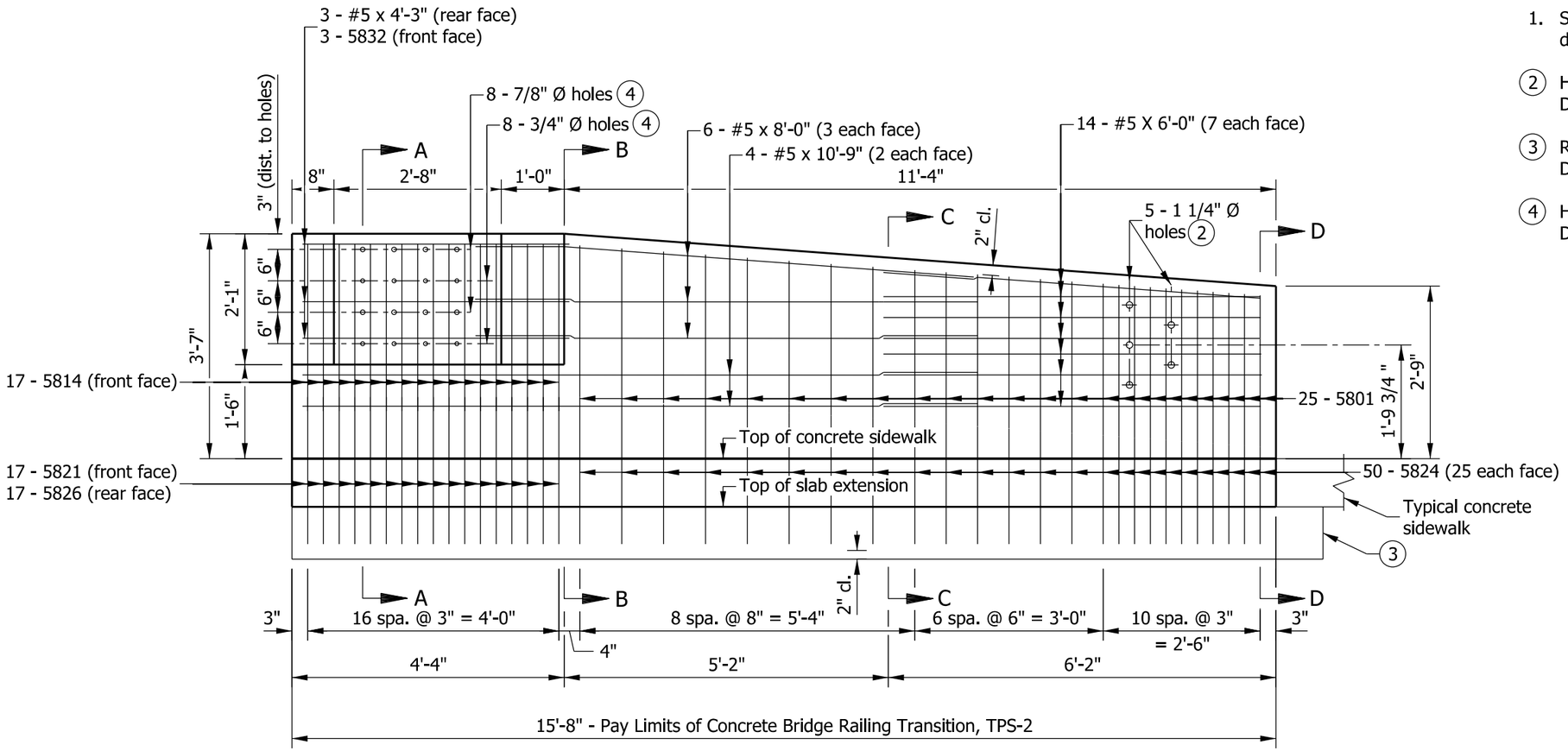

ELEVATION

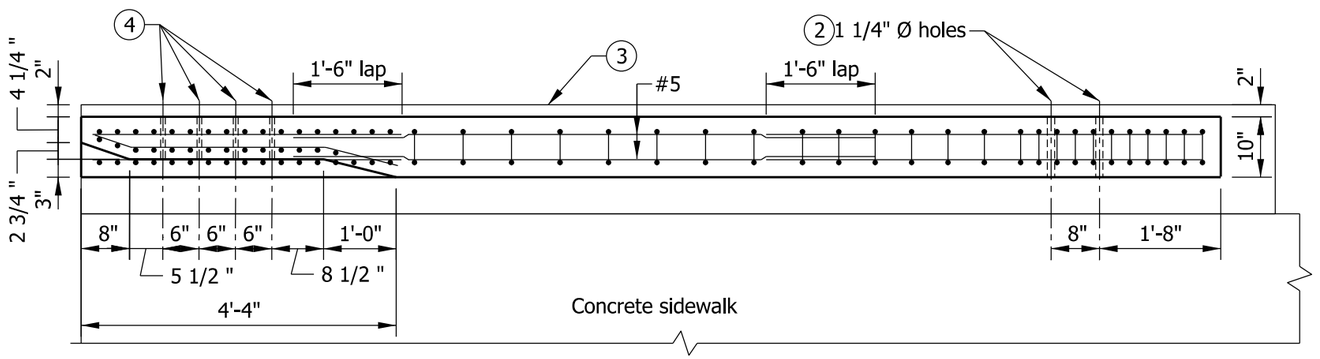

PLAN

NOTES

1. See Standard Drawing E 706-TTPP-08 for sections and reinforcing bar diagrams.

(2) Holes for attachment of guardrail transition type TGB. See Standard Drawing E 706-CBRT-04 for details.

(3) RCBA extension for bridge railing transition type TPS-2. See Standard Drawing E 609-TBAE-01 for details.

(4) Holes for attachment of steel bridge railing type PS-2. See Standard Drawing E 706-BRPP-04 for details.

BILL OF MATERIALS			
Quantities are for one concrete bridge railing transition type TPS-2.			
EPOXY-COATED REINFORCING STEEL			
MARK OR SIZE	NO. OF BARS	LENGTH	WEIGHT
5801	25	5'-4"	
5814	17	3'-0"	
5821	17	3'-3"	
5824	50	4'-3"	
5826	17	5'-4"	
5832	3	4'-3"	
#5	4	10'-9"	
#5	6	8'-0"	
#5	14	6'-0"	
#5	3	4'-3"	
Total Epoxy-Coated Reinforcing Steel			775 LBS
MISCELLANEOUS			
Concrete, Class C			1.9 CYS
Surface Seal			131 SFT

INDIANA DEPARTMENT OF TRANSPORTATION

CONCRETE BRIDGE RAILING TRANSITION, TPS-2

SEPTEMBER 2012

STANDARD DRAWING NO. E 706-TTPP-07

RICHARD L. VanCLEAVE REGISTERED No. 9750 STATE OF INDIANA PROFESSIONAL ENGINEER

/s/ Richard L. VanCleave 09/04/12
SUPERVISOR, ROADWAY STANDARDS DATE

/s/ Mark A. Miller 09/04/12
CHIEF ENGINEER DATE

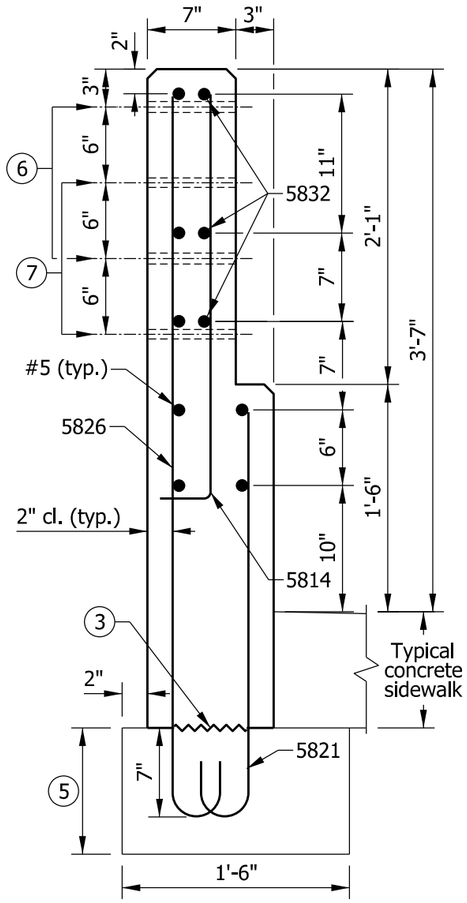

SECTION A-A

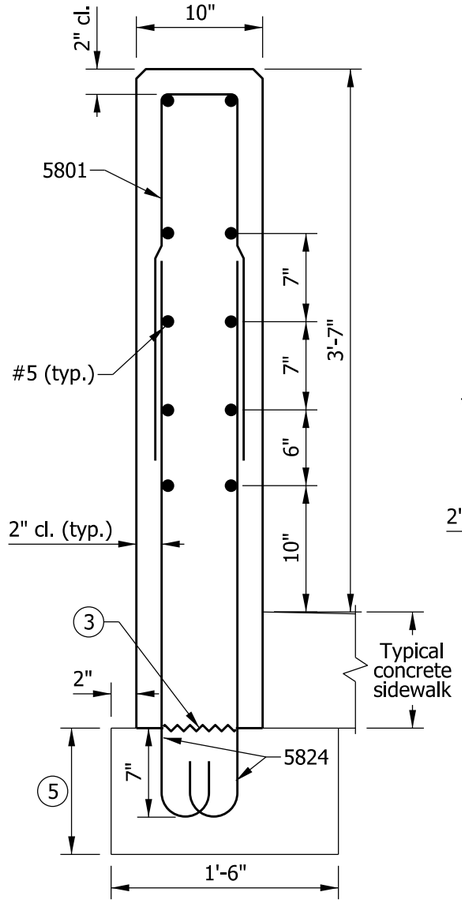

SECTION B-B

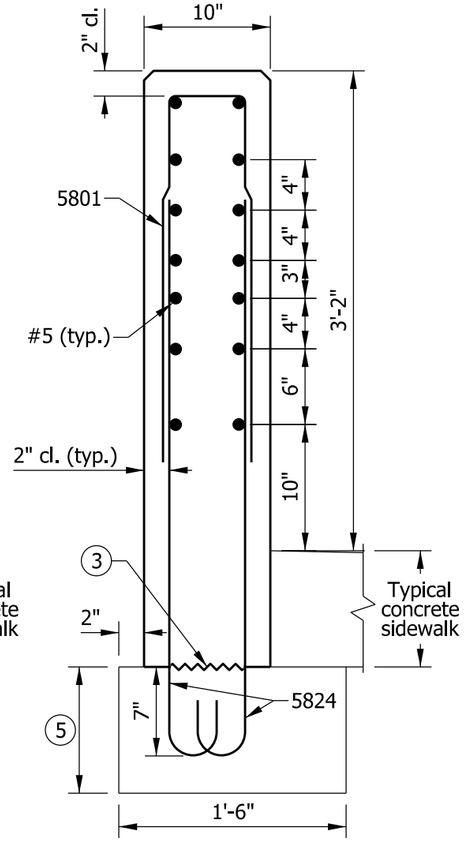

SECTION C-C

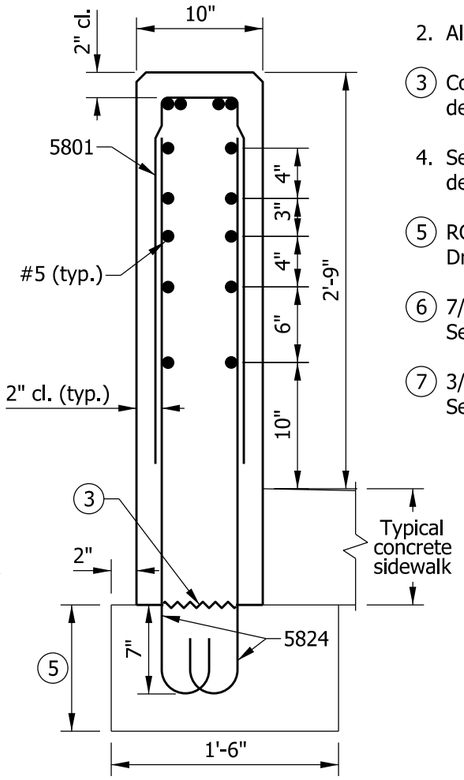

SECTION D-D

NOTES

1. See Standard Drawing E 706-TTPP-07 for elevation and plan.
2. All chamfered edges shall be 3/4".

(3) Construction joint type A. See Standard Drawing E 702-CJTA-01 for details.

4. See Standard Drawing E 703-BRST-01 for reinforcing-bar bending details and notes.

(5) RCBA extension for bridge railing transition type TPS-2. See Standard Drawing E 609-TBAE-01 for details.

(6) 7/8" Ø hole for attachment of steel bridge railing type PS-2, large rail. See Standard Drawing E 706-BRPP-04 for details.

(7) 3/4" Ø hole for attachment of steel bridge railing type PS-2, small rail. See Standard Drawing E 706-BRPP-04 for details.

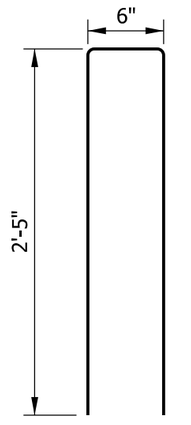

5801 x 5'-4"

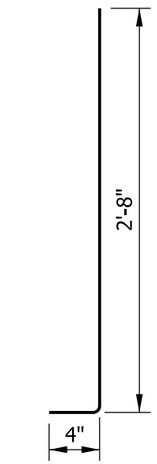

5814 x 3'-0"

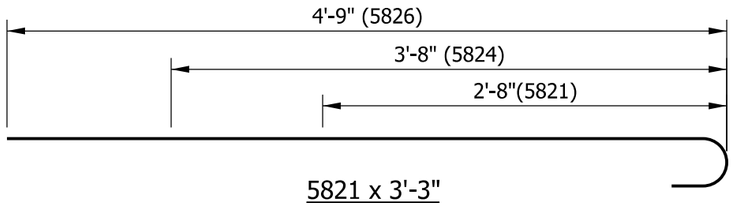

5821 x 3'-3"
5824 x 4'-3"
5826 x 5'-4"

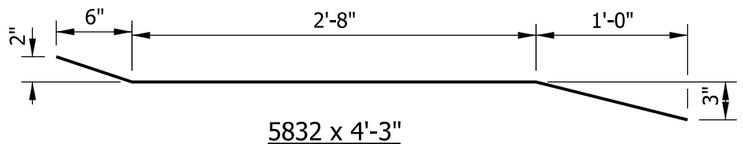

5832 x 4'-3"

INDIANA DEPARTMENT OF TRANSPORTATION

CONCRETE BRIDGE RAILING
TRANSITION, TPS-2

SEPTEMBER 2012

STANDARD DRAWING NO. E 706-TTPP-08

RICHARD L. VanCLEAVE
REGISTERED
No. 9750
STATE OF INDIANA
PROFESSIONAL ENGINEER

/s/ Richard L. VanCleave 09/04/12
SUPERVISOR, ROADWAY STANDARDS DATE

/s/ Mark A. Miller 09/04/12
CHIEF ENGINEER DATE

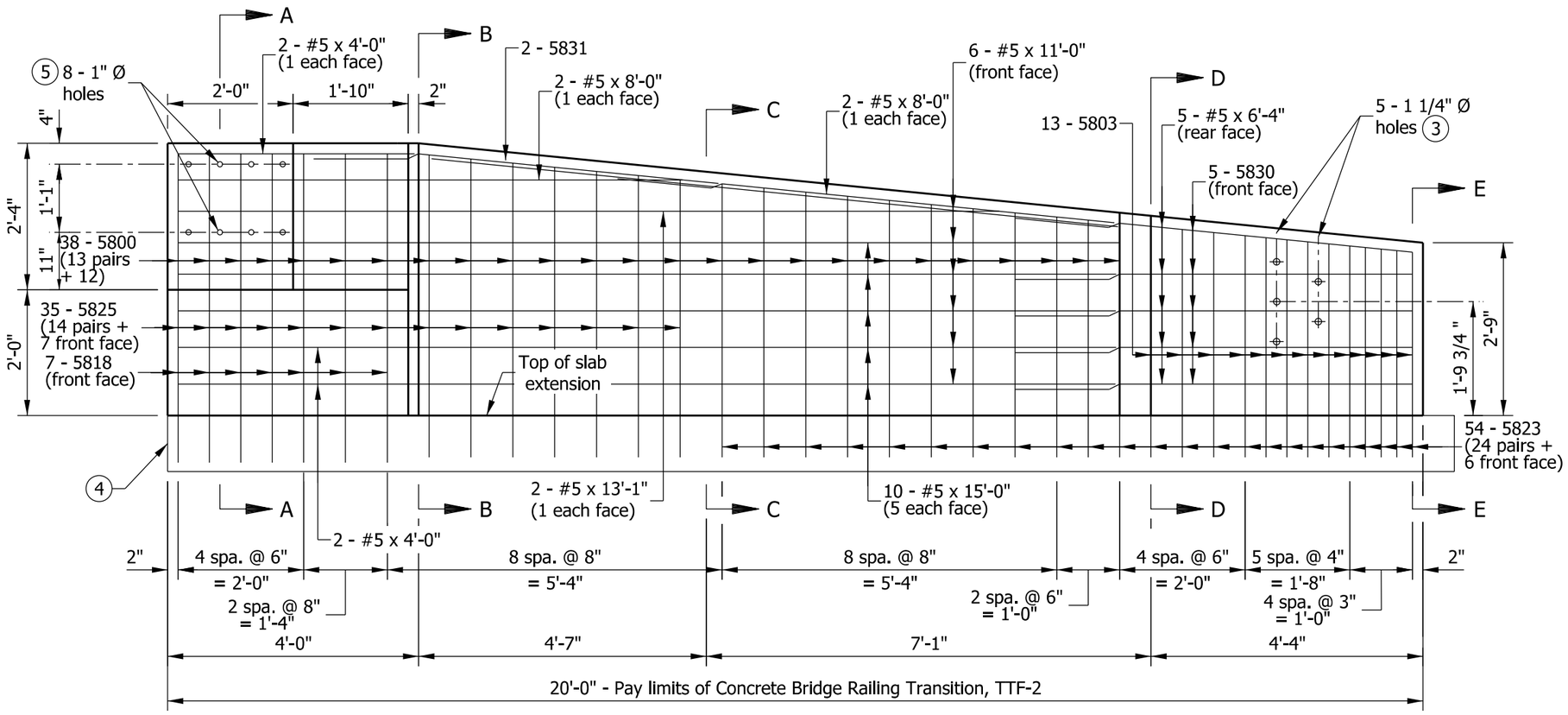

ELEVATION VIEW

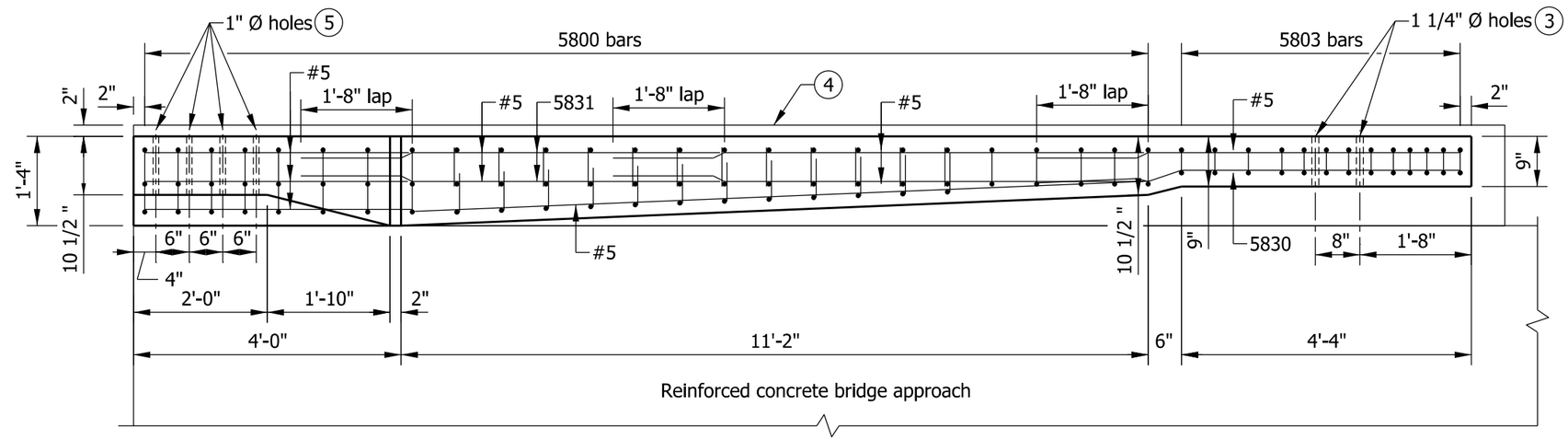

PLAN VIEW

NOTES

1. See Standard Drawings E 706-TTTF-02 and E 706-TTTF-03 for sections.
2. See Standard Drawing E 706-TTTF-04 for reinforcing-bar diagrams and bill of materials.

(3) Holes for attachment of guardrail transition type TGB. See Standard Drawing E 706-CBRT-04 for details.

(4) RCBA extension for bridge railing transition type TTF-2. See Standard Drawing E 609-TBAE-02 for details.

(5) Holes for attachment of steel bridge railing type TF-2. See Standard Drawing E 706-BRTF-01 for details.

INDIANA DEPARTMENT OF TRANSPORTATION

CONCRETE BRIDGE RAILING TRANSITION, TTF-2

SEPTEMBER 2012

STANDARD DRAWING NO. E 706-TTTF-01

RICHARD L. VanCLEAVE REGISTERED No. 9750 STATE OF INDIANA PROFESSIONAL ENGINEER

/s/ Richard L. VanCleave 09/04/12
SUPERVISOR, ROADWAY STANDARDS DATE

/s/ Mark A. Miller 09/04/12
CHIEF ENGINEER DATE

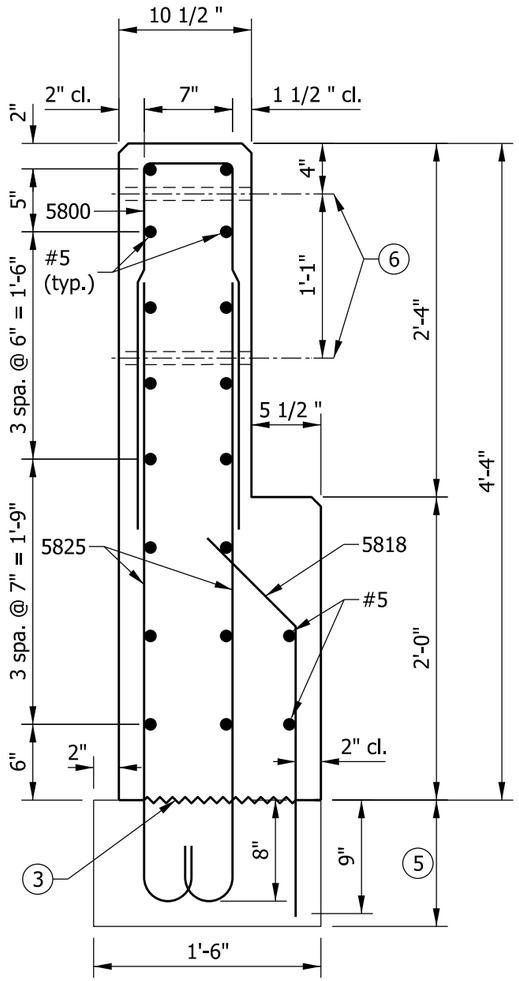

SECTION A-A

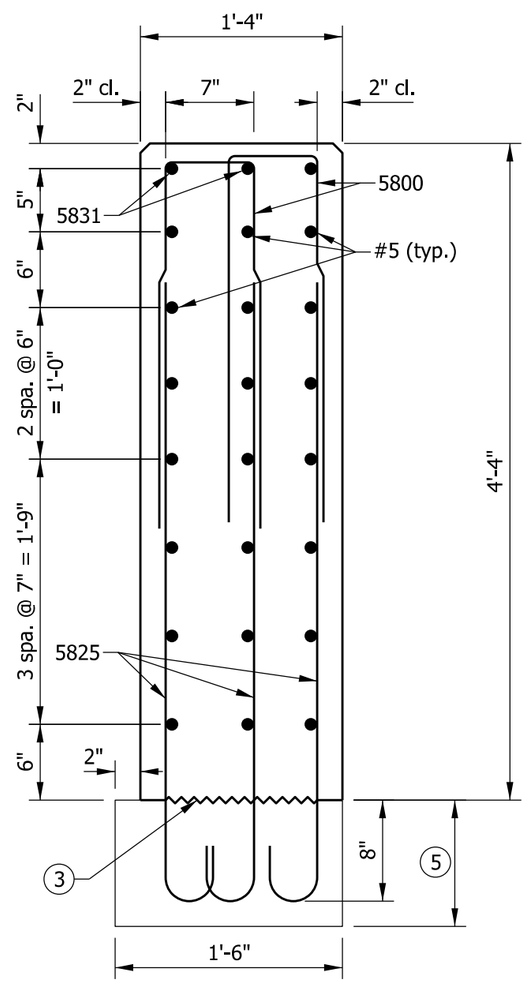

SECTION B-B

NOTES

1. See Standard Drawing E 706-TTTF-01 for elevation and plan.
2. All chamfered edges shall be 3/4".

(3) Construction joint type A. See Standard Drawing E 702-CJTA-01 for details.

4. See Standard Drawing E 706-TTTF-04 for reinforcing-bar diagrams.

(5) RCBA extension for bridge railing transition type TTF-2. See Standard Drawing E 609-TBAE-02 for details.

(6) 1" Ø hole for attachment of steel bridge railing type TF-2. See Standard Drawing E 706-BRTF-01 for details.

INDIANA DEPARTMENT OF TRANSPORTATION

CONCRETE BRIDGE RAILING TRANSITION, TTF-2

SEPTEMBER 2012

STANDARD DRAWING NO. E 706-TTTF-02

RICHARD L. VanCLEAVE REGISTERED No. 9750 STATE OF INDIANA PROFESSIONAL ENGINEER

/s/ Richard L. VanCleave 09/04/12
SUPERVISOR, ROADWAY STANDARDS DATE

/s/ Mark A. Miller 09/04/12
CHIEF ENGINEER DATE

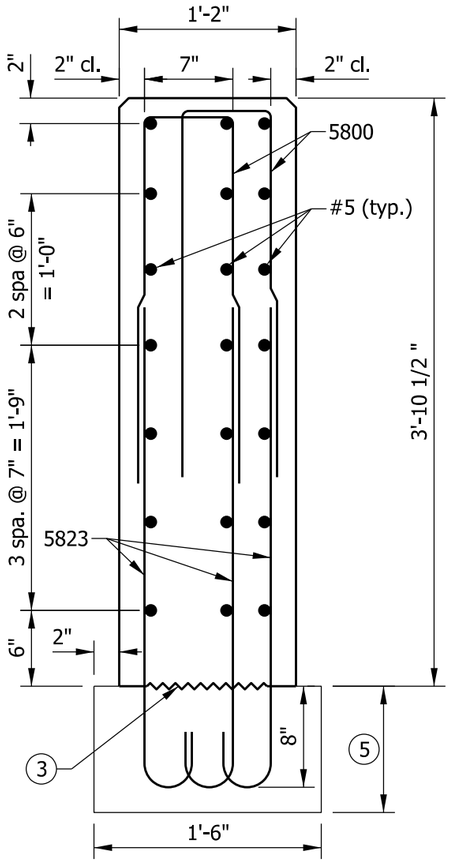

SECTION C-C

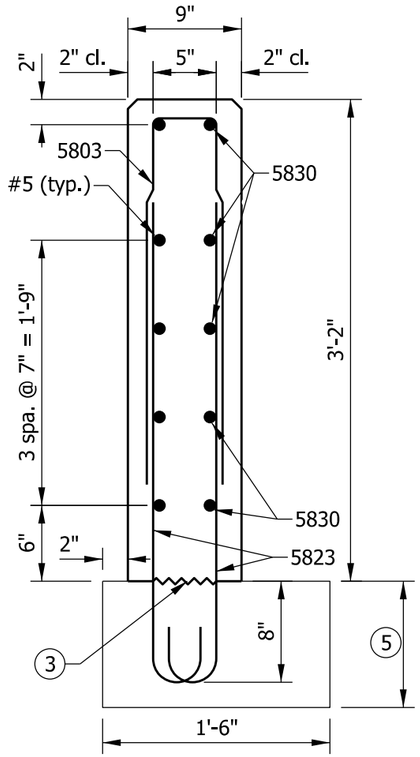

SECTION D-D

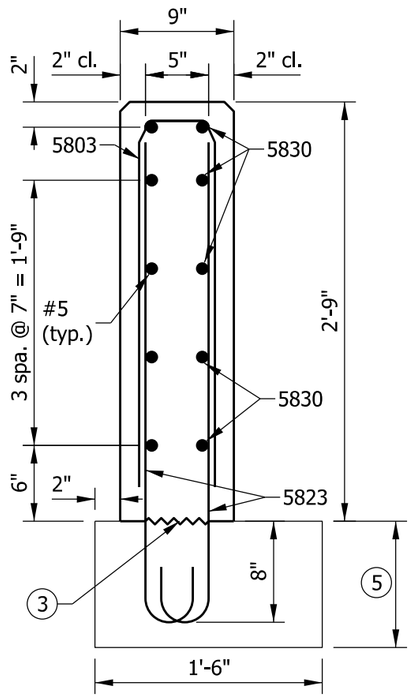

SECTION E-E

NOTES

1. See Standard Drawing E 706-TTTF-01 for elevation and plan.
2. All chamfered edges shall be 3/4".
3. Construction joint type A. See Standard Drawing E 702-CJTA-01 for details.
4. See Standard Drawing E 706-TTTF-04 for reinforcing-bar diagrams.
5. RCBA extension for bridge railing transition type TTF-2. See Standard Drawing E 609-TBAE-02 for details.

INDIANA DEPARTMENT OF TRANSPORTATION

CONCRETE BRIDGE RAILING TRANSITION, TTF-2

SEPTEMBER 2012

STANDARD DRAWING NO. E 706-TTTF-03

RICHARD L. VanCLEAVE REGISTERED No. 9750 STATE OF INDIANA PROFESSIONAL ENGINEER

/s/ Richard L. VanCleave 09/04/12
SUPERVISOR, ROADWAY STANDARDS DATE

/s/ Mark A. Miller 09/04/12
CHIEF ENGINEER DATE

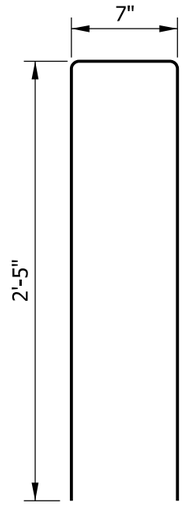

5800 x 5'-5"

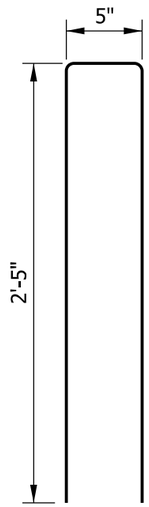

5803 x 5'-3"

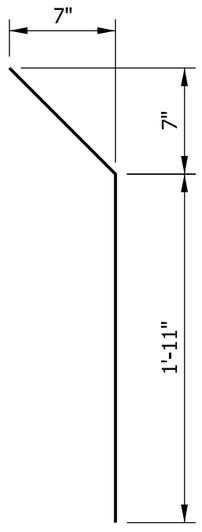

5818 x 2'-9"

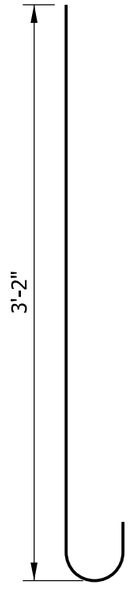

5823 x 3'-9"

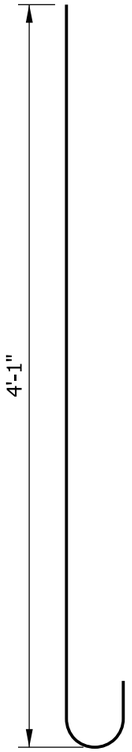

5825 x 4'-8"

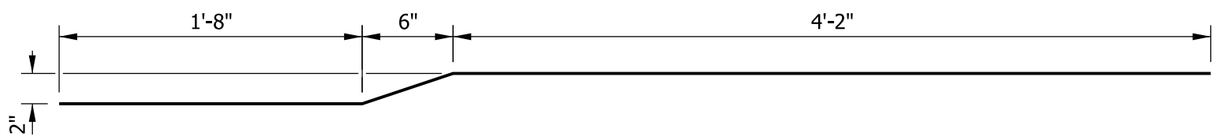

5830 x 6'-4"

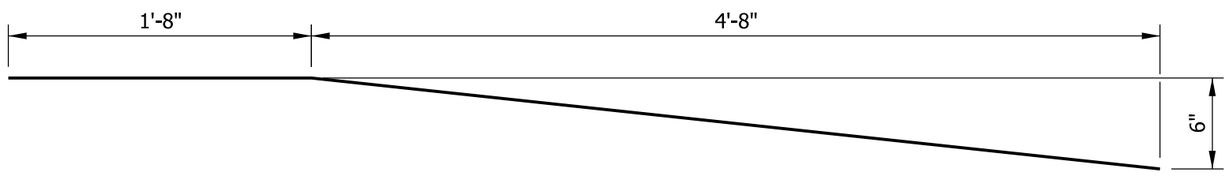

5831 x 6'-4"

NOTE

1. See Standard Drawing E 703-BRST-01 for reinforcing-bar bending details and notes.

BILL OF MATERIALS			
Quantities are for one concrete bridge railing transition type TTF-2			
EPOXY-COATED REINFORCING STEEL			
MARK OR SIZE	NO. OF BARS	LENGTH	WEIGHT
5800	38	5'-5"	
5803	13	5'-3"	
5818	7	2'-9"	
5823	54	3'-9"	
5825	35	4'-8"	
5830	5	6'-4"	
5831	2	6'-4"	
#5	10	15'-0"	
#5	2	13'-1"	
#5	6	11'-0"	
#5	4	8'-0"	
#5	5	6'-4"	
#5	4	4'-0"	
Total Epoxy-Coated Reinforcing Steel			1072 LBS
MISCELLANEOUS			
Concrete, Class C			2.9 CYS
Surface Seal			182 SFT

INDIANA DEPARTMENT OF TRANSPORTATION

CONCRETE BRIDGE RAILING TRANSITION, TTF-2

SEPTEMBER 2012

STANDARD DRAWING NO. E 706-TTTF-04

RICHARD L. VanCLEAVE REGISTERED No. 9750 STATE OF INDIANA PROFESSIONAL ENGINEER

/s/ Richard L. VanCleave 09/04/12
SUPERVISOR, ROADWAY STANDARDS DATE

/s/ Mark A. Miller 09/04/12
CHIEF ENGINEER DATE

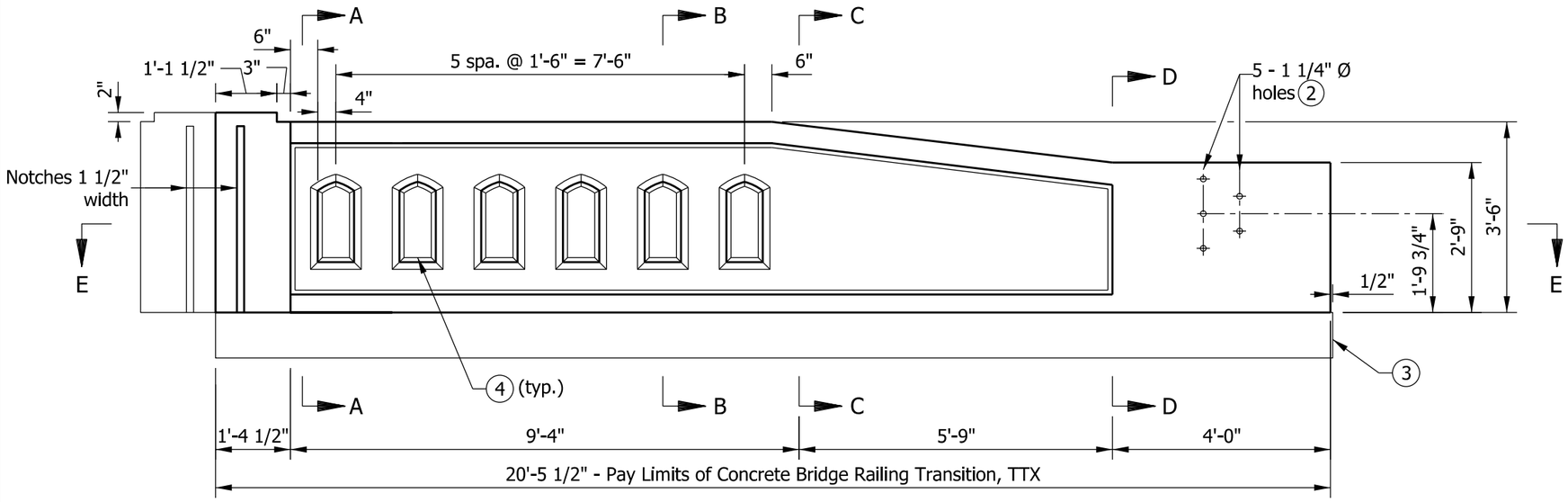

ELEVATION

END BENT PILASTER (typ.)

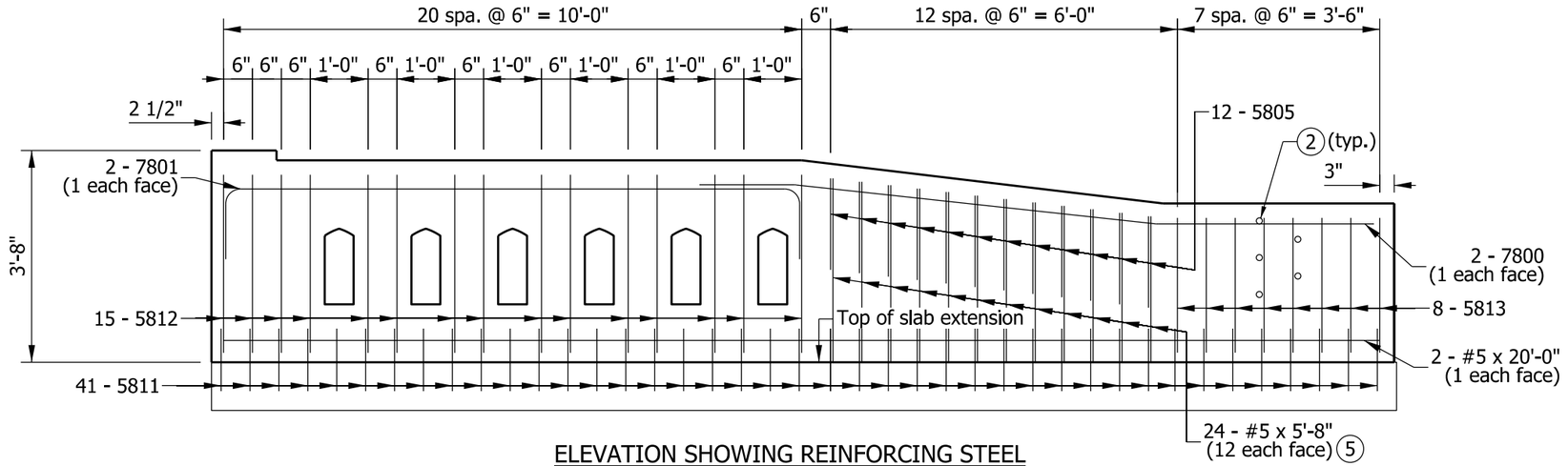

ELEVATION SHOWING REINFORCING STEEL

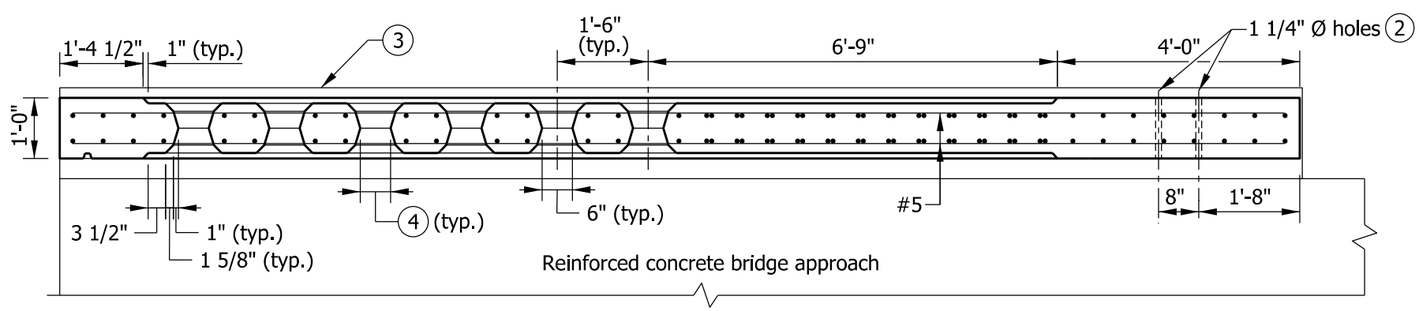

SECTION E-E

NOTES

1. See Standard Drawing E 706-TTTX-02 for sections and reinforcing-bar diagrams.

(2) Holes for attachment of guardrail transition type TGB. See Standard Drawing E 706-CBRT-04 for details.

(3) RCBA extension for bridge railing transition type TTX. See Standard Drawing E 609-TBAE-02 for details.

(4) Window opening. See Standard Drawing E 706-BRTX-02 for details.

(5) See Standard Drawing E 706-TTTX-02 for reinforcing-bar cutting diagram.

BILL OF MATERIALS			
Quantities are for one concrete bridge railing transition type TTX			
EPOXY-COATED REINFORCING STEEL			
MARK OR SIZE	NO. OF BARS	LENGTH	WEIGHT
7800	2	11'-9"	
7801	2	12'-4"	
Total #7			98 LBS
5805	12	4'-8"	
5811	41	4'-0"	
5812	15	8'-6"	
5813	8	7'-0"	
#5	2	20'-0"	
#5	12	5'-8"	
Total #5			538 LBS
Total Epoxy-Coated Reinforcing Steel			636 LBS
MISCELLANEOUS			
Concrete, Class C			2.0 CYS
Surface Seal			149 SFT

INDIANA DEPARTMENT OF TRANSPORTATION

CONCRETE BRIDGE RAILING TRANSITION, TTX

SEPTEMBER 2012

STANDARD DRAWING NO. E 706-TTTX-01

RICHARD L. VanCLEAVE REGISTERED No. 9750 STATE OF INDIANA PROFESSIONAL ENGINEER

/s/ Richard L. VanCleave 09/04/12
SUPERVISOR, ROADWAY STANDARDS DATE

/s/ Mark A. Miller 09/04/12
CHIEF ENGINEER DATE

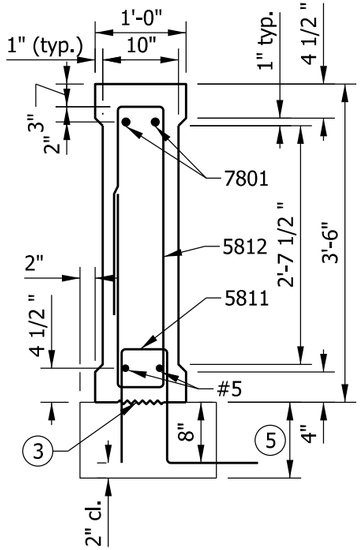

SECTION A-A

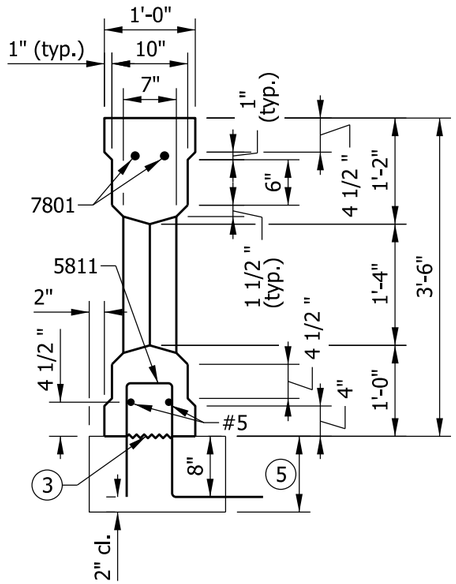

SECTION B-B

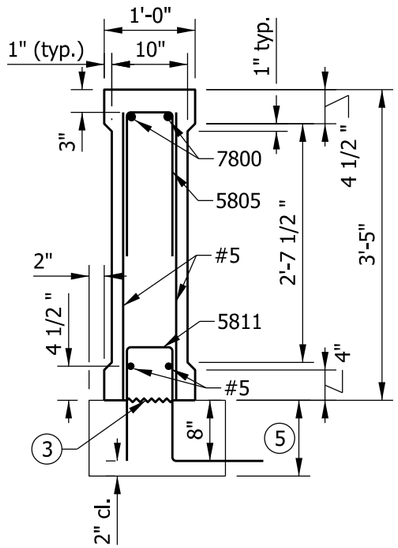

SECTION C-C

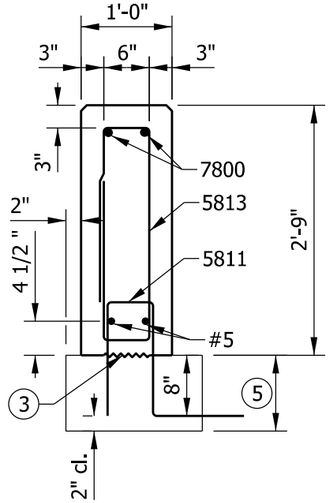

SECTION D-D

NOTES

1. See Standard Drawing E 706-TTTX-01 for elevations and plan.
2. All chamfered edges shall be 3/4".
3. Construction joint type A. See Standard Drawing E 702-CJTA-01 for details.
4. See Standard Drawing E 703-BRST-01 for reinforcing-bar bending details and notes.
5. RCBA extension for bridge railing transition type TTX. See Standard Drawing E 609-TBAE-02 for details.

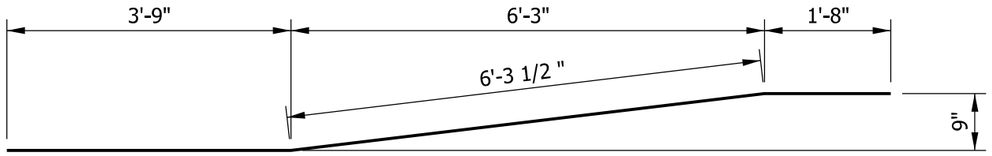

7800 x 11'-9"

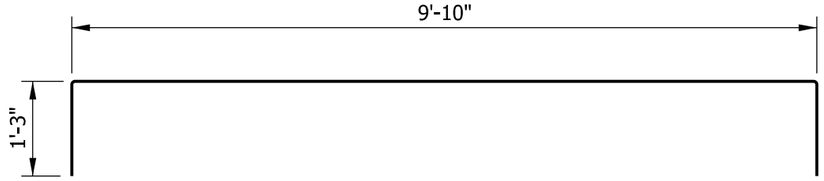

7801 x 12'-4"

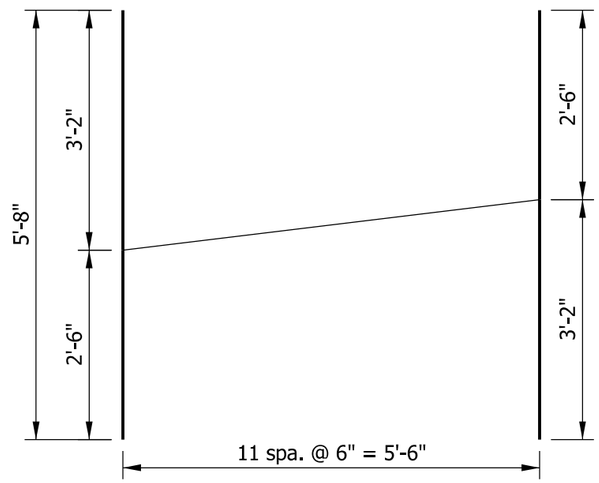

12 - #5 x 5'-8"
CUTTING DIAGRAM

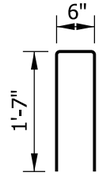

5805 x 4'-8"

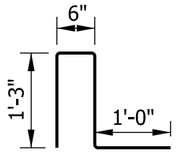

5811 x 4'-0"

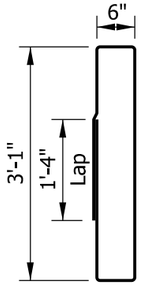

5812 x 8'-6"

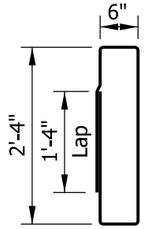

5813 x 7'-0"

INDIANA DEPARTMENT OF TRANSPORTATION

CONCRETE BRIDGE RAILING
TRANSITION, TTX

SEPTEMBER 2012

STANDARD DRAWING NO. E 706-TTTX-02

RICHARD L. VanCLEAVE REGISTERED No. 9750 STATE OF INDIANA PROFESSIONAL ENGINEER

/s/ Richard L. VanCleave 09/04/12
SUPERVISOR, ROADWAY STANDARDS DATE

/s/ Mark A. Miller 09/04/12
CHIEF ENGINEER DATE

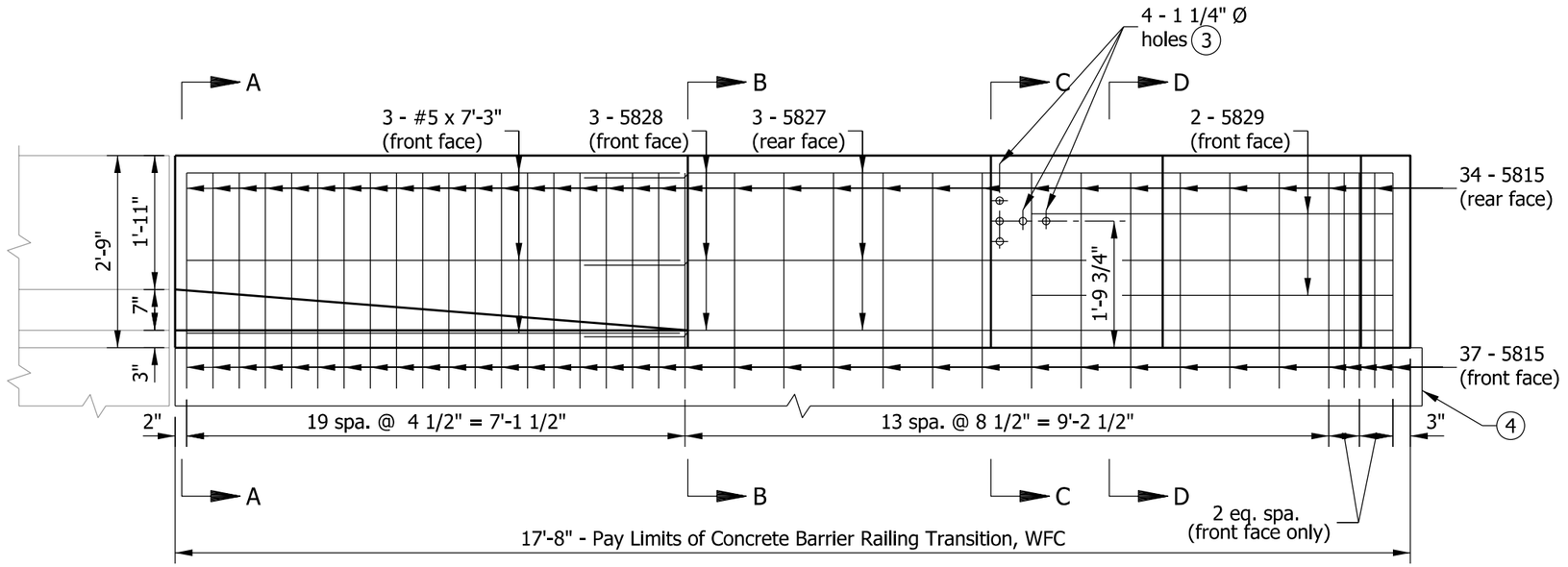

ELEVATION

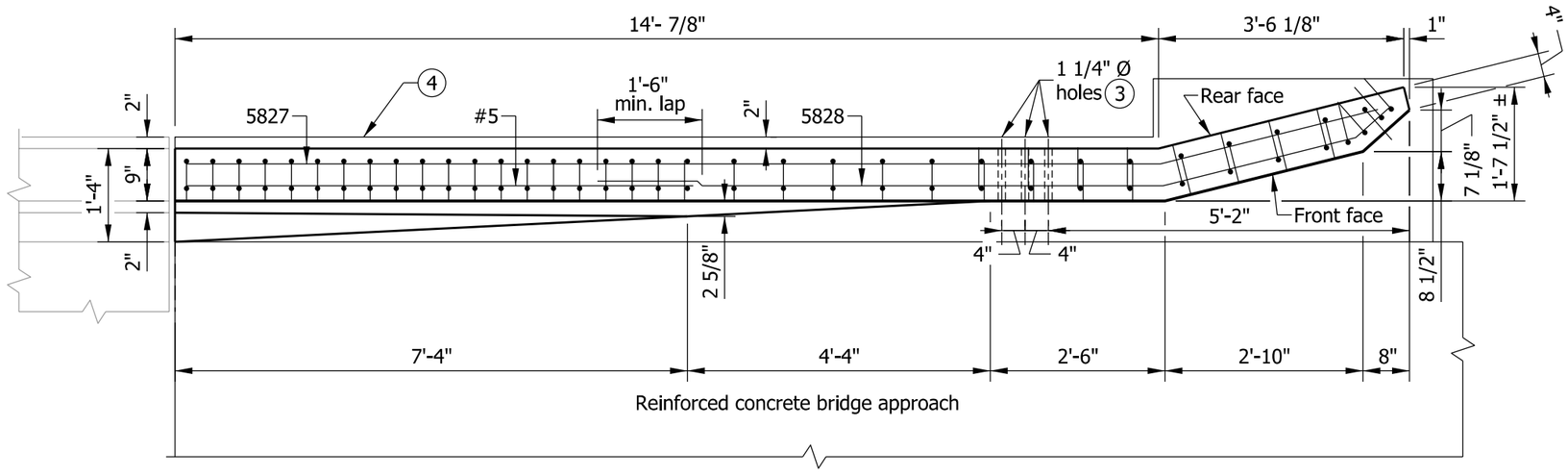

PLAN

NOTES

1. See Standard Drawing E 706-TWFC-02 for sections.
2. See Standard Drawing E 706-TWFC-03 for reinforcing-bar diagrams and bill of materials.

(3) Holes for attachment of guardrail transition type WGB. See Standard Drawing E 706-CBRT-02 for details.

(4) RCBA extension for bridge railing transition type WFC. See Standard Drawing E 609-TBAE-03 for details.

INDIANA DEPARTMENT OF TRANSPORTATION

CONCRETE BRIDGE RAILING TRANSITION TYPE WFC

SEPTEMBER 2012

STANDARD DRAWING NO. E 706-TWFC-01

RICHARD L. VanCLEAVE REGISTERED No. 9750 STATE OF INDIANA PROFESSIONAL ENGINEER

/s/ Richard L. VanCleave 09/04/12
SUPERVISOR, ROADWAY STANDARDS DATE

/s/ Mark A. Miller 09/04/12
CHIEF ENGINEER DATE

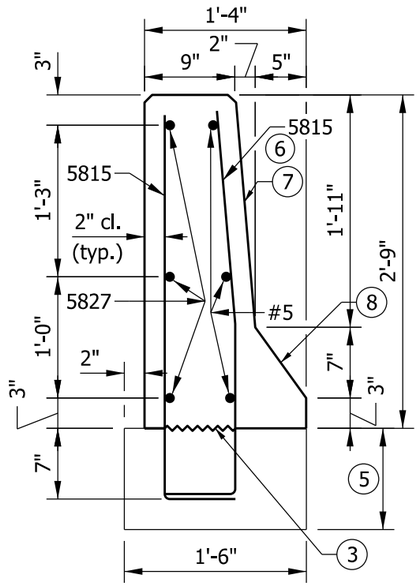

SECTION A-A

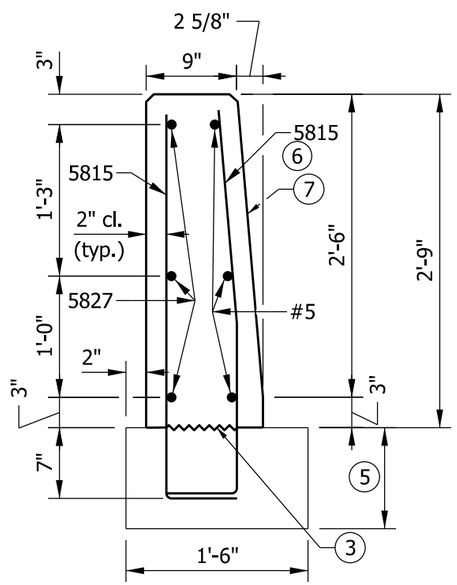

SECTION B-B

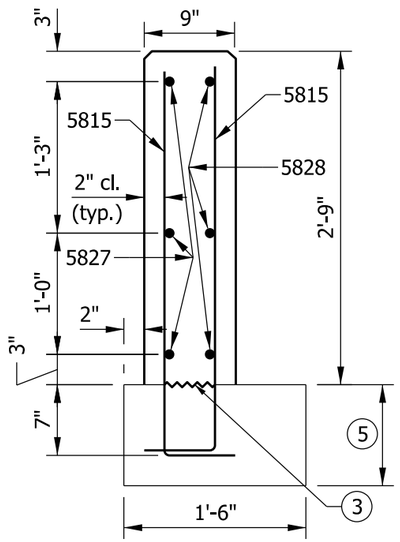

SECTION C-C

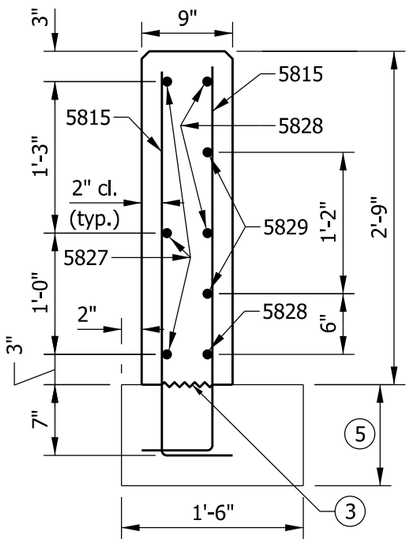

SECTION D-D

NOTES

1. See Standard Drawing E 706-TWFC-01 for elevation and plan.
2. All chamfered edges shall be 3/4".

(3) Construction joint type A. See Standard Drawing E 702-CJTA-01 for details.

4. See Standard Drawing E 706-TWFC-03 for reinforcing-bar diagrams.

(5) RCBA extension for bridge railing transition type WFC. See Standard Drawing E 609-TBAE-03 for details.

(6) These bars shall be field bent to provide 2" clearance along the front face batter.

(7) Constant 1:11 batter.

(8) Constant 5:7 batter.

INDIANA DEPARTMENT OF TRANSPORTATION

CONCRETE BRIDGE RAILING
TRANSITION TYPE WFC

SEPTEMBER 2012

STANDARD DRAWING NO. E 706-TWFC-02

RICHARD L. VanCLEAVE
REGISTERED
No. 9750
STATE OF INDIANA
PROFESSIONAL ENGINEER

/s/ Richard L. VanCleave 09/04/12
SUPERVISOR, ROADWAY STANDARDS DATE

/s/ Mark A. Miller 09/04/12
CHIEF ENGINEER DATE

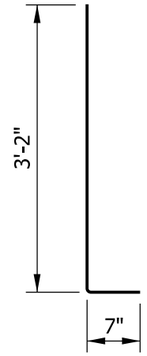

5815 x 3'-9"

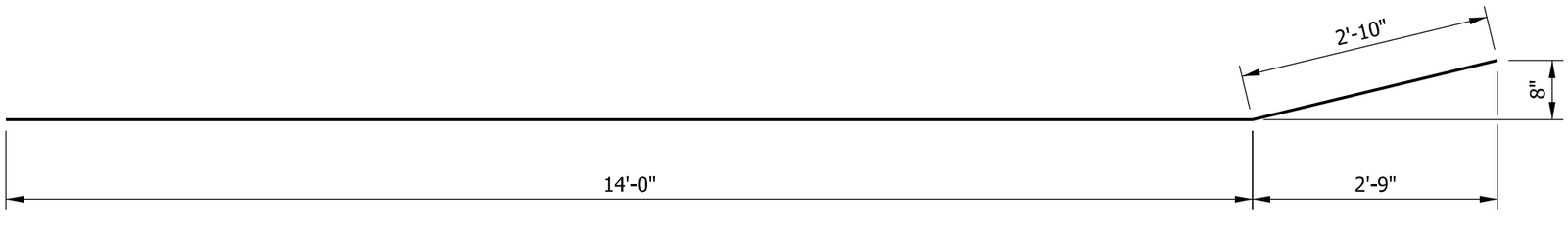

5827 x 16'-10"

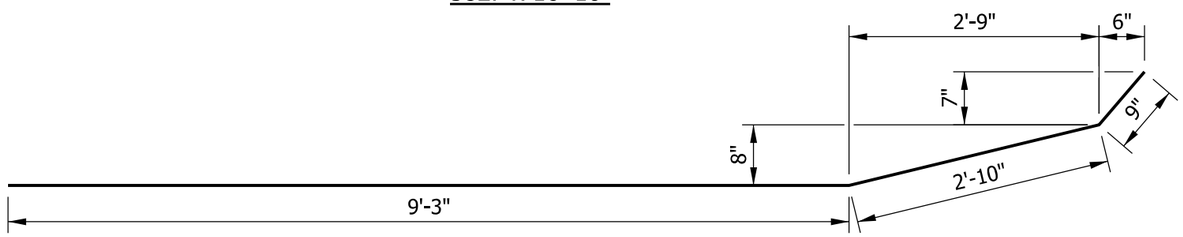

5828 x 12'-10"

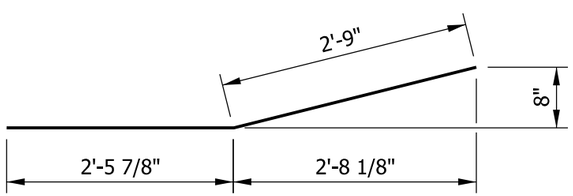

5829 x 5'-3"

NOTE

1. See Standard Drawing E 703-BRST-01 for reinforcing-bar bending details and notes.

BILL OF MATERIALS			
Quantities are for one concrete bridge railing transition type WFC			
EPOXY-COATED REINFORCING STEEL			
MARK OR SIZE	NO. OF BARS	LENGTH	WEIGHT
5815	71	3'-9"	
5827	3	16'-10"	
5828	3	12'-10"	
5829	2	5'-3"	
#5	3	7'-3"	
Total Epoxy-Coated Reinforcing Steel			404 LBS
MISCELLANEOUS			
Concrete, Class C			1.6 CYS
Surface Seal			113 SYS

INDIANA DEPARTMENT OF TRANSPORTATION

CONCRETE BRIDGE RAILING TRANSITION TYPE WFC

SEPTEMBER 2012

STANDARD DRAWING NO. E 706-TWFC-03

RICHARD L. VanCLEAVE REGISTERED No. 9750 STATE OF INDIANA PROFESSIONAL ENGINEER

/s/ Richard L. VanCleave 09/04/12
SUPERVISOR, ROADWAY STANDARDS DATE

/s/ Mark A. Miller 09/04/12
CHIEF ENGINEER DATE

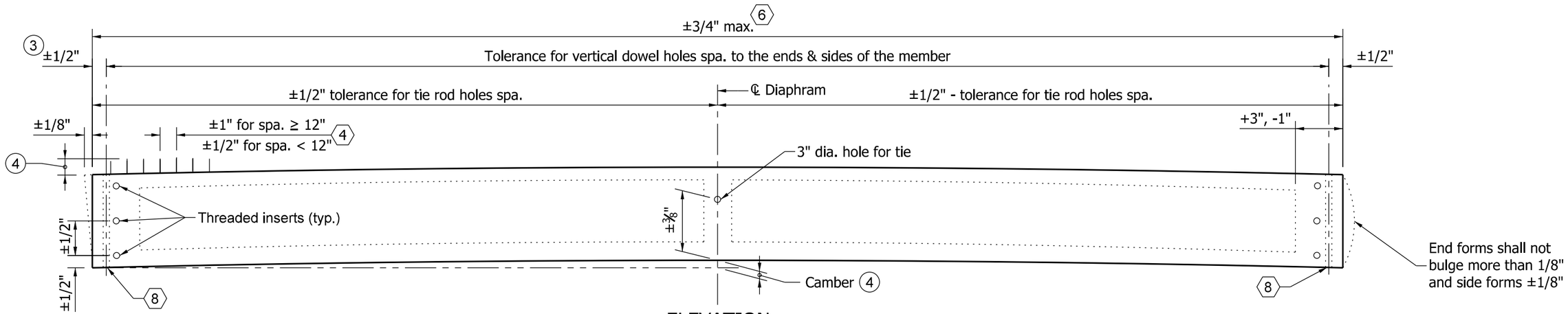

ELEVATION

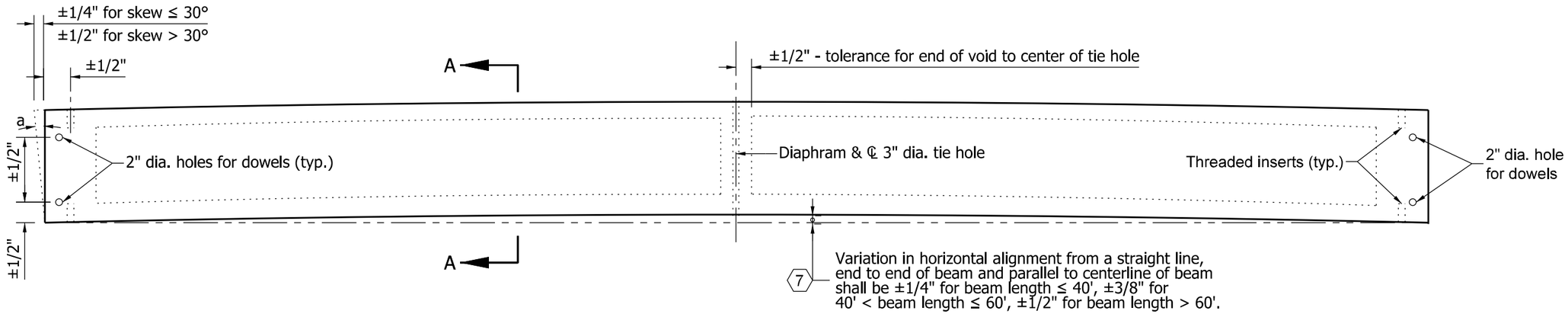

PLAN

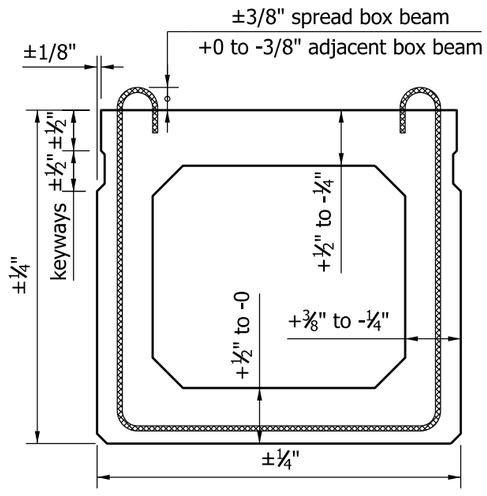

SECTION A-A

NOTES:

1. See Standard Drawing E 707-BPBF-04 for General Notes.
2. The top surface of the beam shall not vary more than 1/8" in 10' as measured from a straightedge.

(3) Tolerance of beam ends for deviation from a true vertical with respect to top and bottom surfaces.

(4) Projection above top of spread box beam shall be ±3/8". Projection above top of adjacent box beam +0 to -3/8".

INDIANA DEPARTMENT OF TRANSPORTATION

FABRICATION TOLERANCES
PRESTRESSED BOX BEAM

SEPTEMBER 2012

STANDARD DRAWING NO. E 707-BPBF-01

RICHARD L. VanCLEAVE REGISTERED No. 9750 STATE OF INDIANA PROFESSIONAL ENGINEER

/s/ Richard L. VanCleave 09/04/12
SUPERVISOR, ROADWAY STANDARDS DATE

/s/ Mark A. Miller 09/04/12
CHIEF ENGINEER DATE

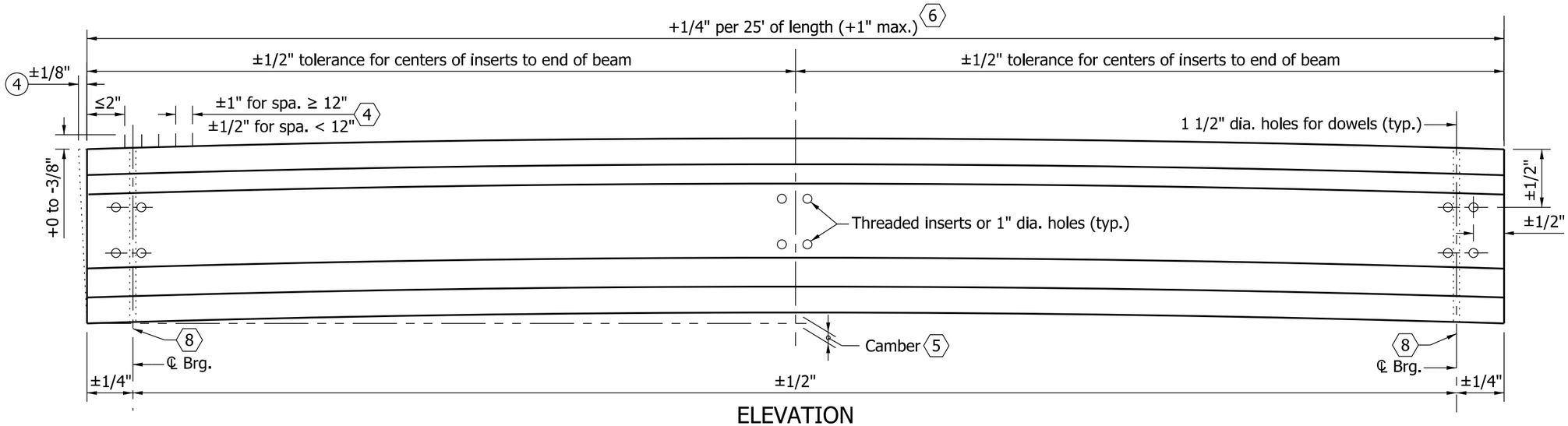

ELEVATION

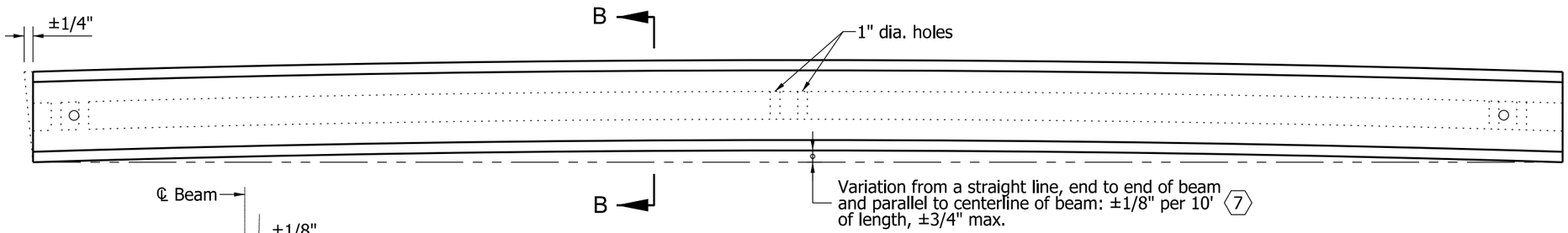

PLAN

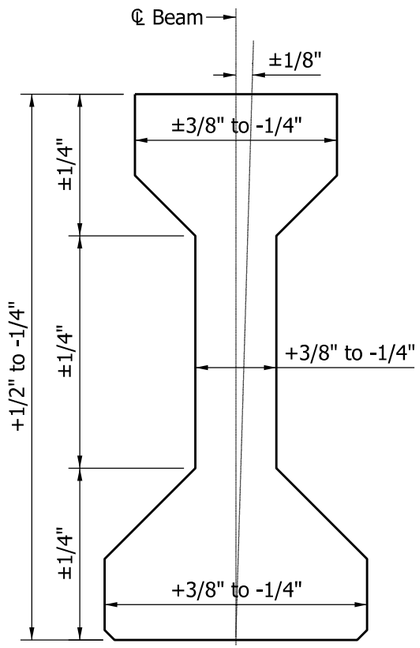

SECTION B-B

NOTES:

1. See Standard Drawing E 707-BPBF-04 for General Notes.
2. Center of gravity of depressed-strands group at the end of beam shall not be more than ±1/2".
3. Tolerance of position of post-tensioning duct shall be ±1/4".

(4) Horizontal tolerance of beam ends for deviation from a true vertical with respect to top and bottom sufaces. Vertical tolerance shall be ±1/8" per 12" of beam height.

INDIANA DEPARTMENT OF TRANSPORTATION

FABRICATION TOLERACES PRESTRESSED I BEAM

SEPTEMBER 2012

STANDARD DRAWING NO. E 707-BPBF-02

RICHARD L. VanCLEAVE REGISTERED No. 9750 STATE OF INDIANA PROFESSIONAL ENGINEER

/s/ Richard L. VanCleave 09/04/12
SUPERVISOR, ROADWAY STANDARDS DATE

/s/ Mark A. Miller 09/04/12
CHIEF ENGINEER DATE

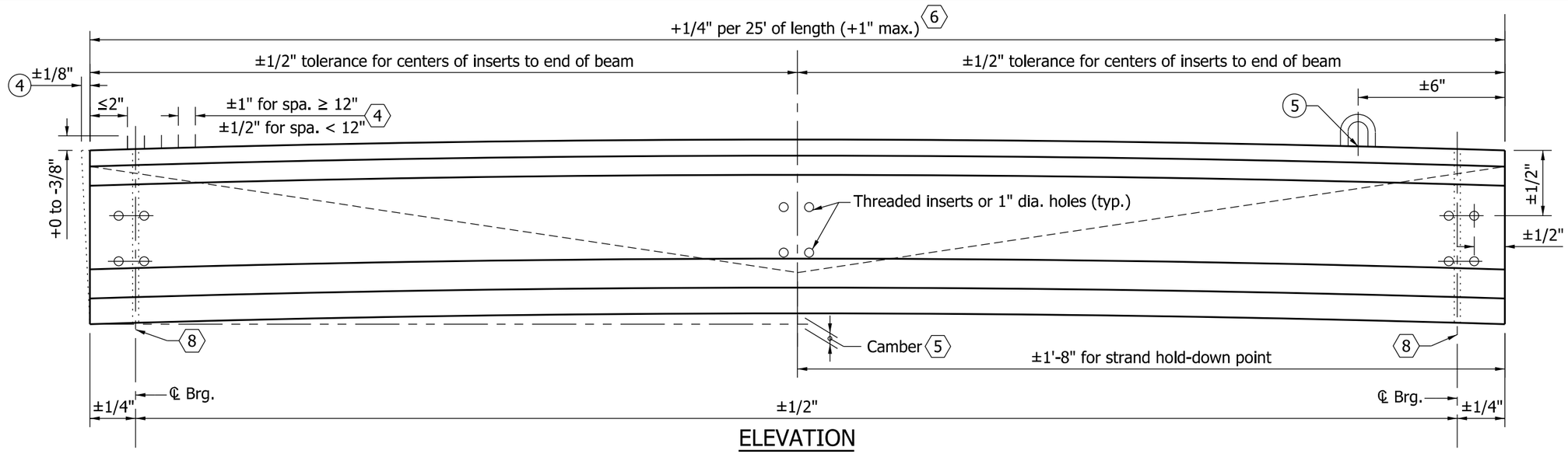

ELEVATION

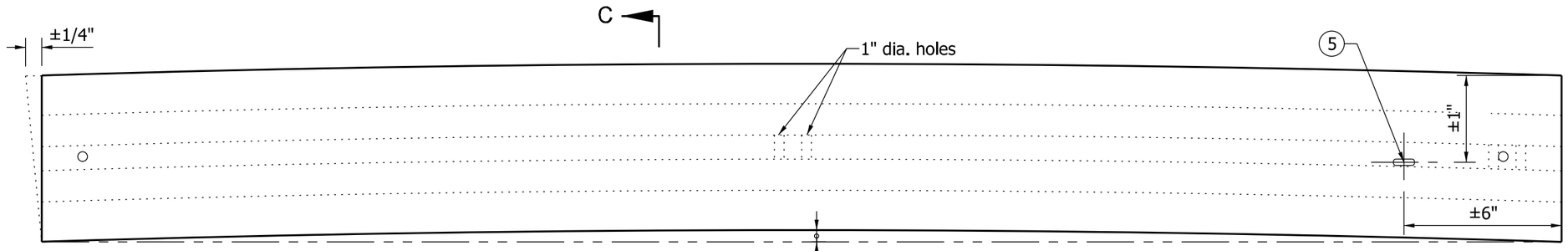

Variation from a straight line, end to end of beam and parallel to centerline of beam: ±1/8" per 10' of length, ±3/4" max. 7

C

PLAN

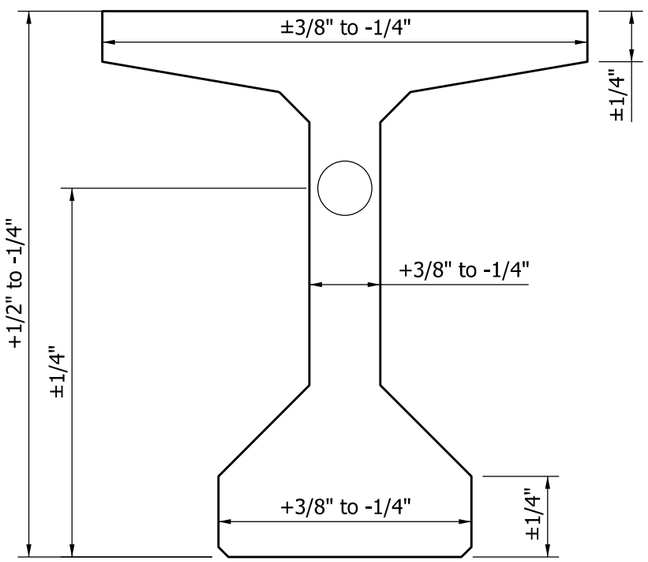

SECTION C-C

NOTES:

1. See Standard Drawing E 707-BPBF-04 for General Notes.
2. Center of gravity of depressed-strands group at the end of beam shall not be more than ±1/2".
3. Tolerance of position of post-tensioning duct shall be ±1/4".

(4) Horizontal tolerance of beam ends for deviation from a true vertical with respect to top and bottom sufaces. Vertical tolerance shall be ±1/8" per 12" of beam height.

(5) Location of handling device.

INDIANA DEPARTMENT OF TRANSPORTATION

FABRICATION TOLERACES
PRESTRESSED BULB-TEE BEAM

SEPTEMBER 2012

STANDARD DRAWING NO. E 707-BPBF-03

RICHARD L. VanCLEAVE REGISTERED No. 9750 STATE OF INDIANA PROFESSIONAL ENGINEER

/s/ Richard L. VanCleave 09/04/12
SUPERVISOR, ROADWAY STANDARDS DATE

/s/ Mark A. Miller 09/04/12
CHIEF ENGINEER DATE

GENERAL NOTES :

1. Tolerances shown are maximum permissible varations from the dimensions shown on the plans or shop drawings. Tolerances shall not be considered cumulative. Longitudinal tolerances are based on design length. Casting length shall be adjusted to compensate for shrinkage and plastic flow.

2. End stirrup bars shall not be more than 2" from the end of the beam.

3. Mild reinforcing steel concrete cover tolerance shall be 1/8" to +3/8".

4. Tolerances for reinforcing bars for composite beam.

5. Variation of camber shall not be more than 1" on one span nor more than 1/2" between adjacent members to be measured at time of erection.

   Permitted camber variation from design camber is as follows:
   I-beam or bulb-tee beam: ±1/8" per 10'-0" length with ±1/2" maximum for member length of 80'-0" or less
   ±1" maximum for member length of greater than 80'-0"
   Box beam: ±1/8" per 10'-0" length with ±1/2" mm maximum

6. Tolerance in length of beam shall be checked after the final curing phase and within three days prior to shipping.

7. Horizontal-alignment tolerance shall be checked immediately after removal of forms and strand release, and prior to removal from bed.

8. At concrete bearing area, deviation from plane surface when tested in all directions of the plane surface with a steel straightedge shall not be more than ±1/16".

INDIANA DEPARTMENT OF TRANSPORTATION

FABRICATION TOLERANCES GENERAL NOTES

SEPTEMBER 2011

STANDARD DRAWING NO. E 707-BPBF-04

RICHARD L. VanCLEAVE REGISTERED No. 9750 STATE OF INDIANA PROFESSIONAL ENGINEER

DESIGN STANDARDS ENGINEER

/s/ Richard L.VanCleave 09/01/11
DESIGN STANDARDS ENGINEER DATE

/s/ Mark A. Miller 09/01/11
CHIEF HIGHWAY ENGINEER DATE

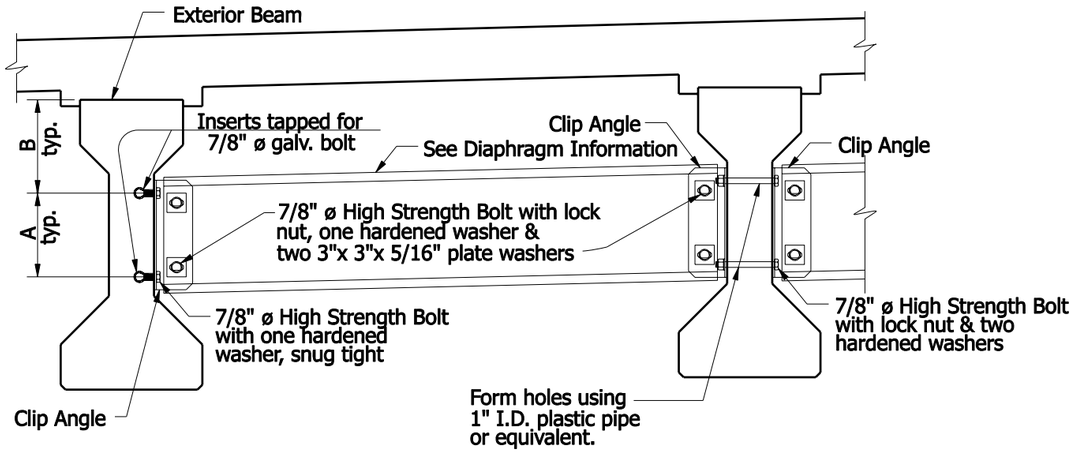

INTERMEDIATE DIAPHRAGM

Typical for Square Structure

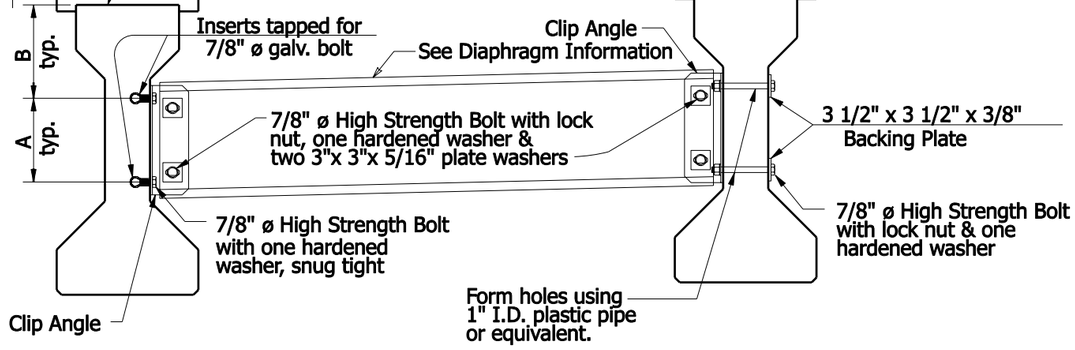

INTERMEDIATE DIAPHRAGM

Typical for Skewed Structure

Diaphragm Information							
Beam Type	Dimension						Channel Type
	A	B	C	D	E	F	
Type II	9"	1'-0"	1'-1"	6"	3 1/2"	3"	C 12 x 20.7
Type III	1'-1"	1'-2 1/2"	1'-5"	10"	3 1/2"	4"	MC 18 x 42.7
Type IV	1'-4"	1'-5 1/2"	1'-8"	10"	5"	4"	MC 18 x 42.7

NOTES:

1. See Standard Drawing E 707-SDPC-02 for connection details.

INDIANA DEPARTMENT OF TRANSPORTATION

STEEL DIAPHRAGMS AASHTO I-BEAMS

SEPTEMBER 2007

STANDARD DRAWING NO. E 707-SDPC-01

RICHARD L. VanCLEAVE REGISTERED No. 9750 STATE OF INDIANA PROFESSIONAL ENGINEER

DESIGN STANDARDS ENGINEER

/s/ Richard L. VanCleave 09/04/07
DESIGN STANDARDS ENGINEER — DATE

/s/ Mark A. Miller 09/04/07
CHIEF HIGHWAY ENGINEER — DATE

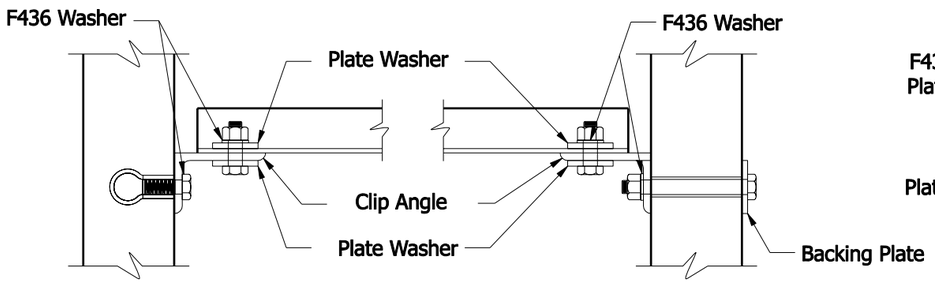

Exterior Beam

Interior Beam, Skewed Structure

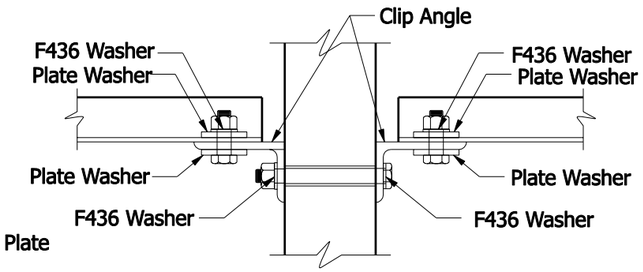

Interior Beam, Square Structure

CONNECTION DETAILS

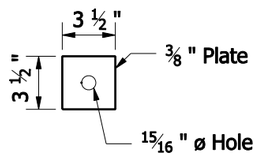

BACKING PLATE

Skewed Structure Only

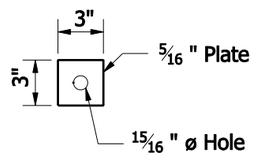

PLATE WASHER

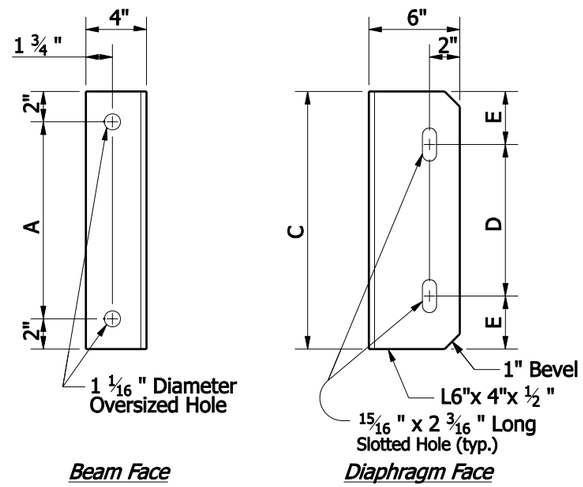

Beam Face

Diaphragm Face

CLIP ANGLE

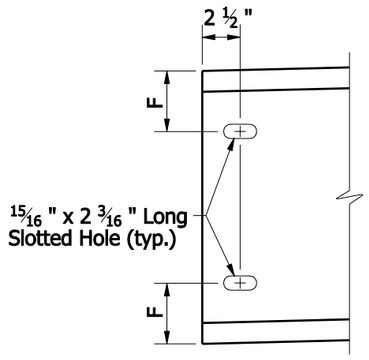

CHANNEL END

INDIANA DEPARTMENT OF TRANSPORTATION

STEEL DIAPHRAGMS
AASHTO I-BEAMS

SEPTEMBER 2007

STANDARD DRAWING NO. E 707-SDPC-02

RICHARD L. VanCLEAVE
REGISTERED
No. 9750
STATE OF INDIANA
PROFESSIONAL ENGINEER

DESIGN STANDARDS ENGINEER

/s/ Richard L. vanCleave *09/04/07*
DESIGN STANDARDS ENGINEER — DATE

/s/ Mark a. Miller *09/04/07*
CHIEF HIGHWAY ENGINEER — DATE

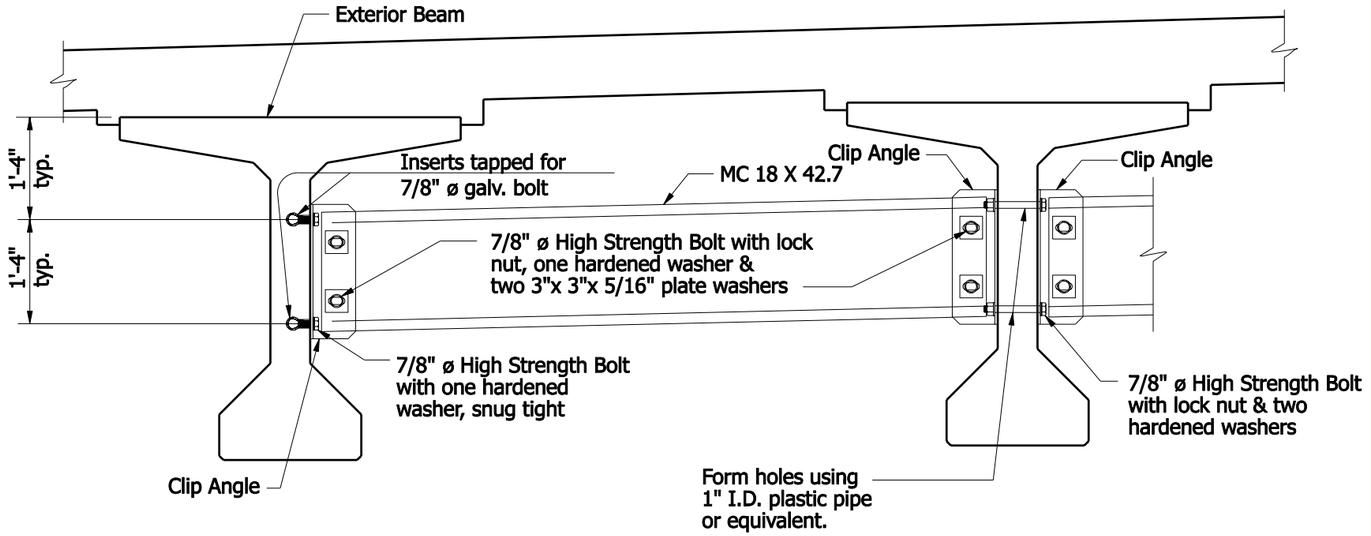

INTERMEDIATE DIAPHRAGM

Typical for Square Structure

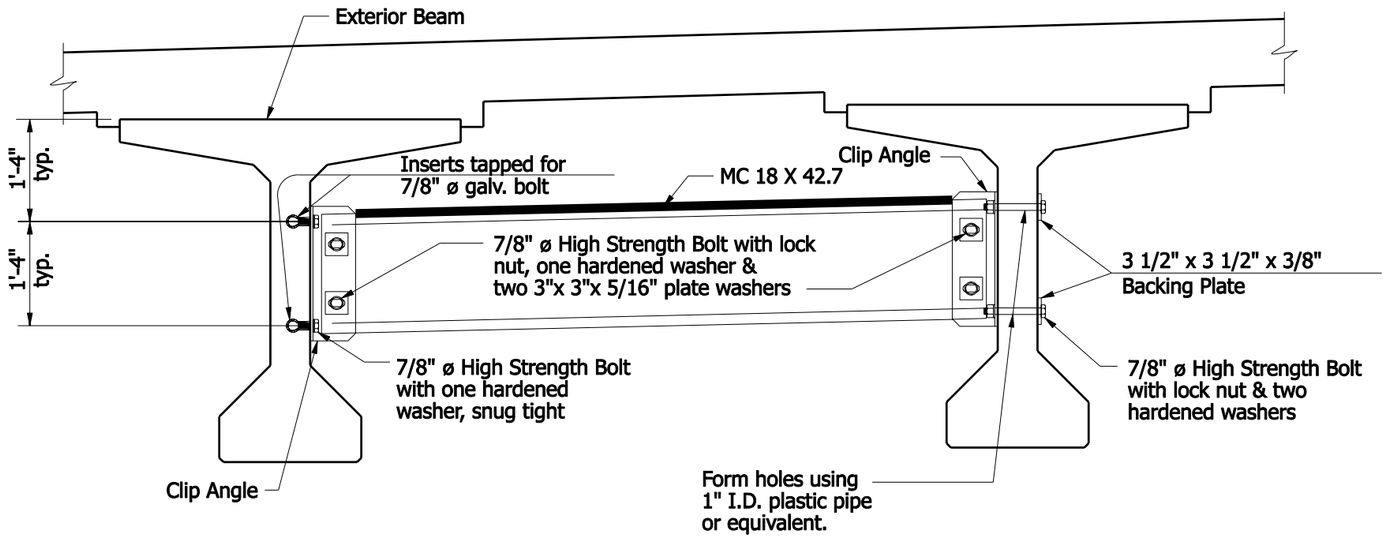

INTERMEDIATE DIAPHRAGM

Typical for Skewed Structure

NOTES:

1. See Standard Drawing E 707-SDPC-04 for connection details.

INDIANA DEPARTMENT OF TRANSPORTATION

STEEL DIAPHRAGMS
INDIANA BULB-TEES, 54-IN. DEPTH

SEPTEMBER 2007

STANDARD DRAWING NO. E 707-SDPC-03

RICHARD L. VanCLEAVE REGISTERED No. 9750 STATE OF INDIANA PROFESSIONAL ENGINEER

DESIGN STANDARDS ENGINEER

/s/ Richard L. VanCleave 09/04/07

DESIGN STANDARDS ENGINEER — DATE

/s/ Mark A. Miller 09/04/07

CHIEF HIGHWAY ENGINEER — DATE

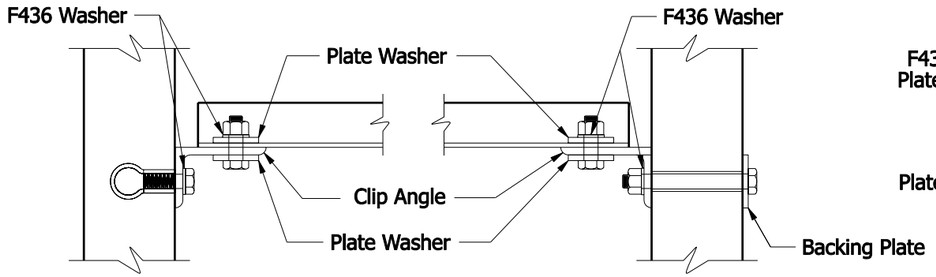

Exterior Beam

Interior Beam, Skewed Structure

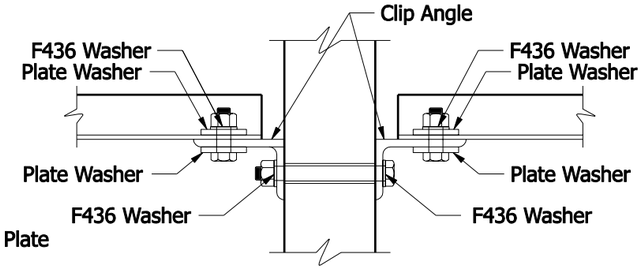

Interior Beam, Square Structure

CONNECTION DETAILS

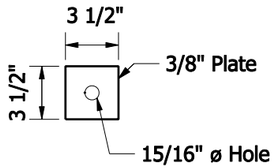

BACKING PLATE

Skewed Structure Only

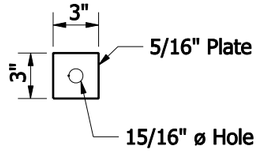

PLATE WASHER

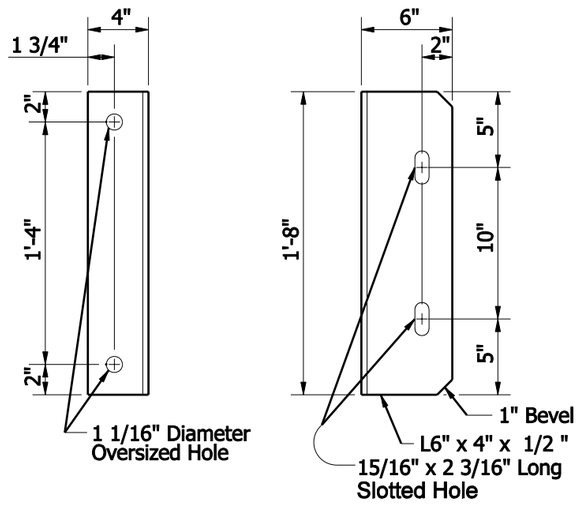

Beam Face

Diaphragm Face

CLIP ANGLE

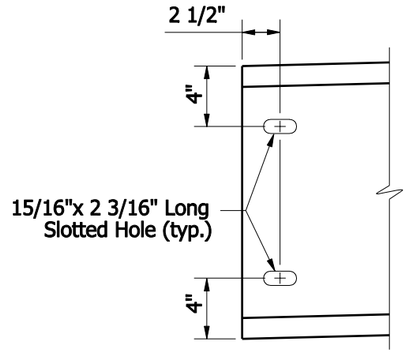

CHANNEL END

INDIANA DEPARTMENT OF TRANSPORTATION

STEEL DIAPHRAGMS
INDIANA BULB-TEES, 54-IN. DEPTH

SEPTEMBER 2007

STANDARD DRAWING NO. E 707-SDPC-04

RICHARD L. VanCLEAVE REGISTERED No. 9750 STATE OF INDIANA PROFESSIONAL ENGINEER

DESIGN STANDARDS ENGINEER

/s/ Richard L. VanCleave 09/04/07
DESIGN STANDARDS ENGINEER — DATE

/s/ Mark A. Miller 09/04/07
CHIEF HIGHWAY ENGINEER — DATE

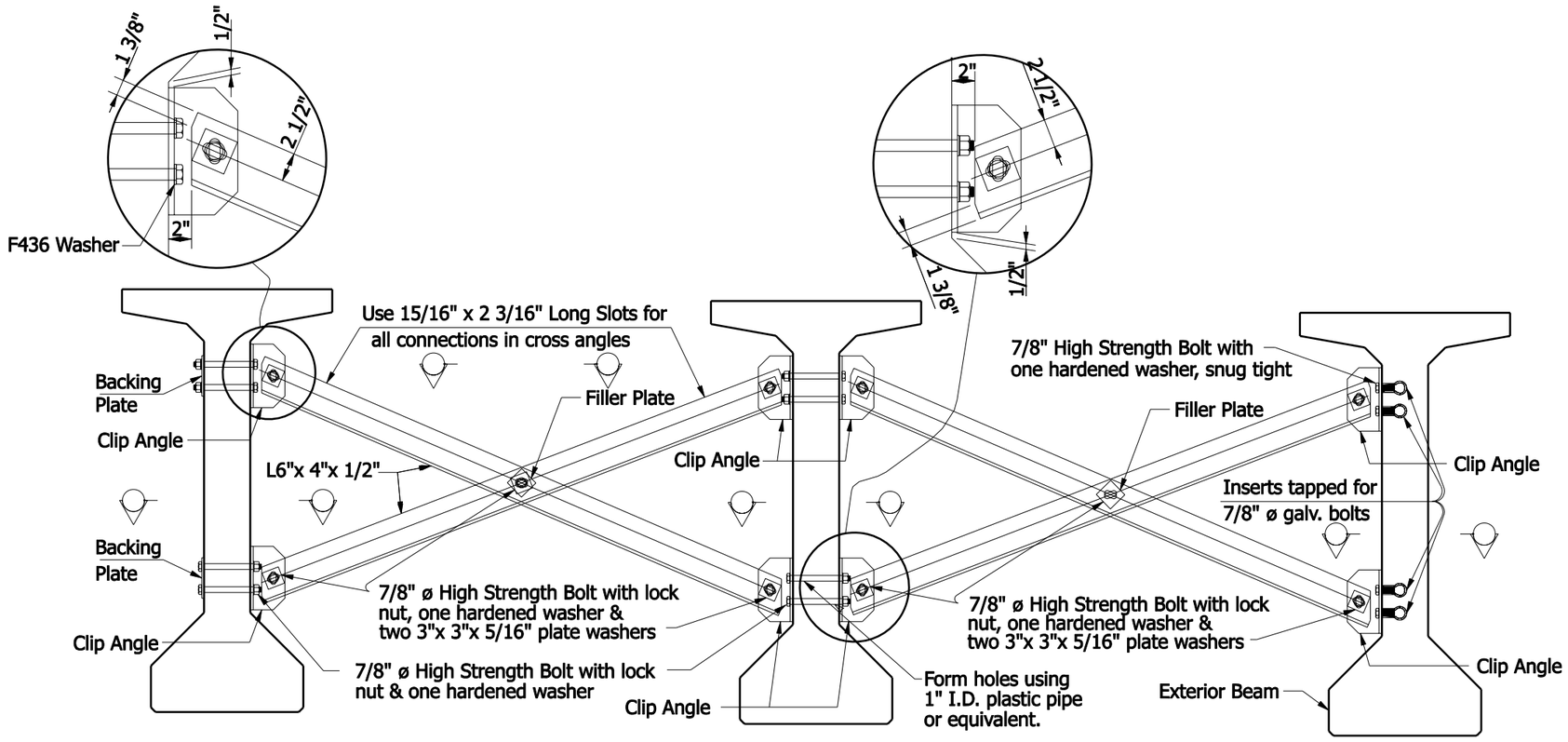

NOTES:

1. See Standard Drawing E 707-SDPC-06 for connection details.

INTERMEDIATE DIAPHRAGM DETAILS

INDIANA DEPARTMENT OF TRANSPORTATION

STEEL DIAPHRAGMS
INDIANA BULB-TEES, 60 IN. OR DEEPER

SEPTEMBER 2007

STANDARD DRAWING NO. E 707-SDPC-05

RICHARD L. VanCLEAVE
REGISTERED
No. 9750
STATE OF INDIANA
PROFESSIONAL ENGINEER

DESIGN STANDARDS ENGINEER

/s/ Richard L. VanCleave 09/04/07
DESIGN STANDARDS ENGINEER — DATE

/s/ Mark A. Miller 09/04/07
CHIEF HIGHWAY ENGINEER — DATE

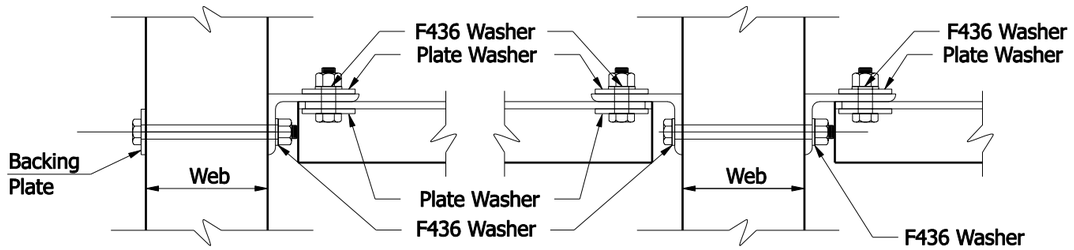

SECTION T-T
Interior Beam, Skewed Structure

SECTION B-B
Interior Beam, Square Structure

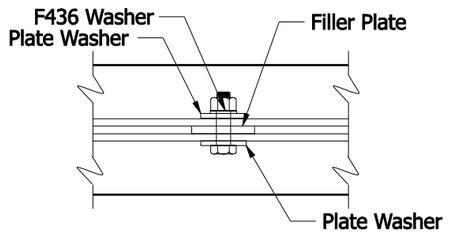

SECTION X-X

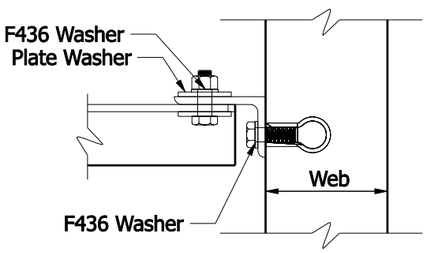

SECTION E-E
Exterior Beam

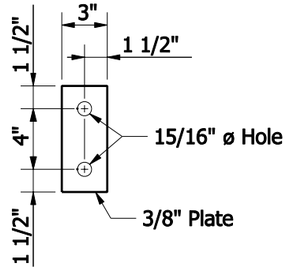

BACKING PLATE

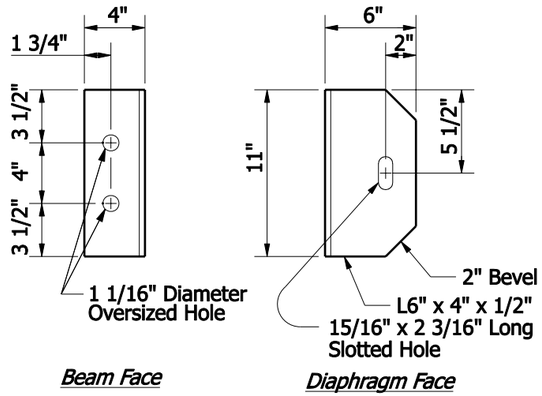

Beam Face *Diaphragm Face*

CLIP ANGLE

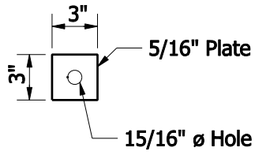

PLATE WASHER

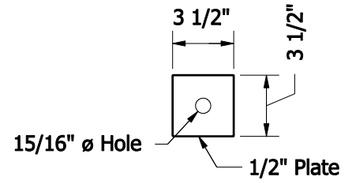

FILLER PLATE

INDIANA DEPARTMENT OF TRANSPORTATION

STEEL DIAPHRAGMS
INDIANA BULB-TEES, 60 IN. OR DEEPER

SEPTEMBER 2007

STANDARD DRAWING NO. E 707-SDPC-06

RICHARD L. VanCLEAVE REGISTERED No. 9750 STATE OF INDIANA PROFESSIONAL ENGINEER

DESIGN STANDARDS ENGINEER

/s/ Richard L. VanCleave 09/04/07
DESIGN STANDARDS ENGINEER DATE

/s/ Mark A. Miller 09/04/07
CHIEF HIGHWAY ENGINEER DATE

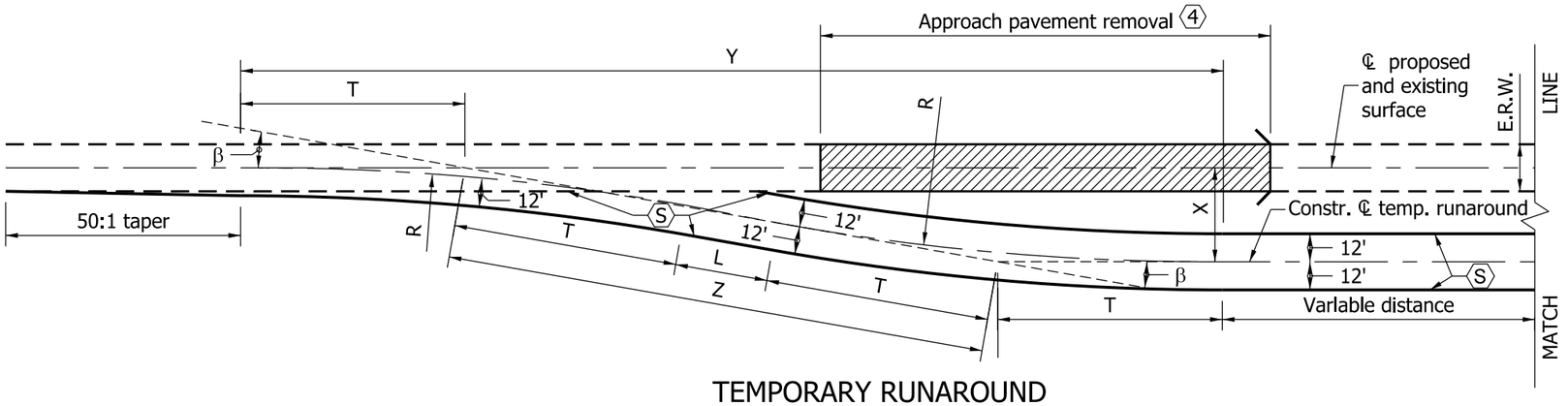

TEMPORARY RUNAROUND

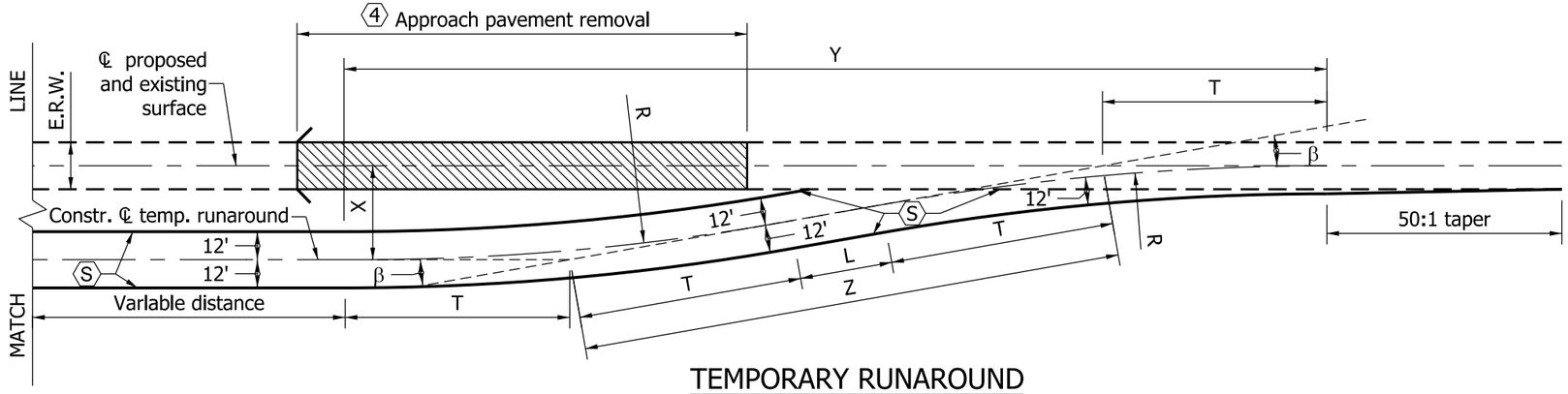

TEMPORARY RUNAROUND

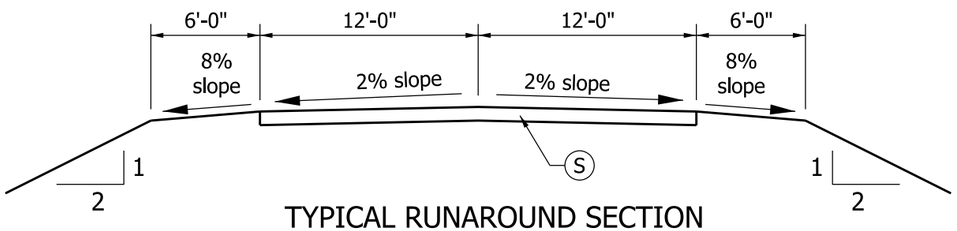

TYPICAL RUNAROUND SECTION

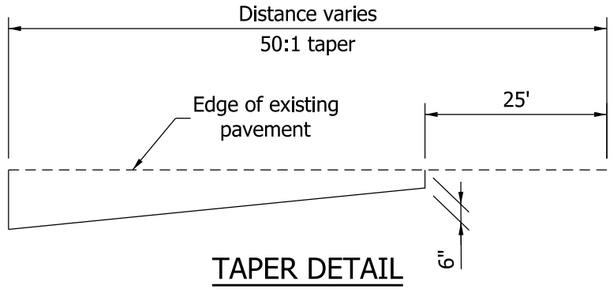

TAPER DETAIL

NOTES:

1. See Standard Drawing E 713-TCTR-04 for general notes with numbered hexagon frame that apply to this sheet.
2. See Standard Drawings E 713-TCTR-02 for runaround geometrics and -02A for surface areas.
3. See Standard Drawing E 801-TCLG-01 for standard notes and legend.

LEGEND:

Work Area

INDIANA DEPARTMENT OF TRANSPORTATION

TEMPORARY RUNAROUND GEOMETRICS

SEPTEMBER 2011

STANDARD DRAWING NO. E 713-TCTR-01

RICHARD L. VanCLEAVE REGISTERED No. 9750 STATE OF INDIANA PROFESSIONAL ENGINEER

DESIGN STANDARDS ENGINEER

DETAILS PLACED IN THIS FORMAT 9/1/2011

/s/ Richard L. VanCleave 09/01/11

DESIGN STANDARDS ENGINEER DATE

/s/ Mark A. Miller 09/01/11

CHIEF HIGHWAY ENGINEER DATE

ORIGINALLY APPROVAL ON SEPTEMBER 9/1/06

RUNAROUND GEOMETRICS AND SURFACE AREAS

	TYPE A, ≥ 50 MPH						TYPE B, ≤ 45 MPH					
X (ft)	40	45	50	55	60	65	40	45	50	55	60	65
β	10°	10°	10°	10°	10°	10°	13°	13°	13°	13°	13°	13°
Z (ft)	230.35	259.14	287.94	316.73	345.53	374.32	177.82	200.04	222.27	244.50	266.72	288.95
R (ft)	1070	1070	1070	1070	1070	1070	720	720	720	720	720	720
T (ft)	93.61	93.61	93.61	93.61	93.61	93.61	82.03	82.03	82.03	82.03	82.03	82.03
L (ft)	43.13	71.92	100.72	129.51	158.31	187.10	13.76	35.98	58.21	80.44	102.66	124.89
Y (ft)	414.07	442.42	470.79	499.14	527.50	555.85	337.32	358.97	380.63	402.29	423.94	445.60
E.R.W. (ft)	SURFACE AREA OF RUNAROUND IN SYS. (VARIABLE DISTANCE NOT INCLUDED)											
18	1555	1751	1950	2148	2347	2545	1280	1433	1586	1739	1892	2045
20	1493	1691	1890	2088	2287	2585	1225	1378	1531	1684	1837	1990
22	1428	1627	1825	2024	2222	2420	1170	1323	1476	1629	1783	1935
24	1375	1574	1773	1971	2170	2368	1127	1280	1432	1586	1739	1892

ERW - Existing Roadway Width

INDIANA DEPARTMENT OF TRANSPORTATION

TEMPORARY RUNAROUND GEOMETRICS

SEPTEMBER 2011

STANDARD DRAWING NO. E 713-TCTR-02

RICHARD L. VanCLEAVE REGISTERED No. 9750 STATE OF INDIANA PROFESSIONAL ENGINEER

DESIGN STANDARDS ENGINEER

DETAILS PLACED IN THIS FORMAT 9/1/2011

/s/ Richard L. VanCleave *09/01/11*

DESIGN STANDARDS ENGINEER DATE

/s/ Mark A. Miller *09/01/11*

CHIEF HIGHWAY ENGINEER DATE

ORIGINALLY APPROVAL ON SEPTEMBER 9/1/06

RUNAROUND GEOMETRICS AND SURFACE AREAS						
TYPE C						
X (ft)	40	45	50	55	60	65
β	20°	20°	20°	20°	20°	20°
Z (ft)	116.95	131.57	146.19	160.81	175.43	190.05
R (ft)	280	280	280	280	280	280
T (ft)	49.37	49.37	49.37	49.37	49.37	49.37
L (ft)	18.21	32.83	47.45	62.07	76.69	91.31
Y (ft)	208.64	222.38	236.11	249.85	263.59	277.33
E.R.W. (ft)	RUNAROUND AREA, SYS.					
18	816	916	1017	1117	1218	1320
20	775	875	976	1076	1177	1277
22	734	835	935	1036	1136	1237
24	703	806	907	1007	1108	1208

ERW - Existing Roadway Width

ALLOWABLE RUNAROUND TYPE VS. POSTED SPEED																		
EXISTING POSTED SPEED (mph)	55	50	45		40		35			30			25			20		
ALLOWABLE TYPE	A	A	A	B	A	B	A	B	C	A	B	C	A	B	C	A	B	C
RUNAROUND POSTED SPEED (mph)	45	45	45	35	40	35	35	35	25	30	30	25	25	25	25	20	20	20

INDIANA DEPARTMENT OF TRANSPORTATION

TEMPORARY RUNAROUND GEOMETRICS

SEPTEMBER 2011

STANDARD DRAWING NO. E 713-TCTR-02A

RICHARD L. VanCLEAVE REGISTERED No. 9750 STATE OF INDIANA PROFESSIONAL ENGINEER

DESIGN STANDARDS ENGINEER

DETAILS PLACED IN THIS FORMAT 9/1/2011

/s/ Richard L. VanCleave 09/01/11

DESIGN STANDARDS ENGINEER DATE

/s/ Mark A. Miller 09/01/11

CHIEF HIGHWAY ENGINEER DATE

ORIGINALLY APPROVAL ON SEPTEMBER 9/1/06

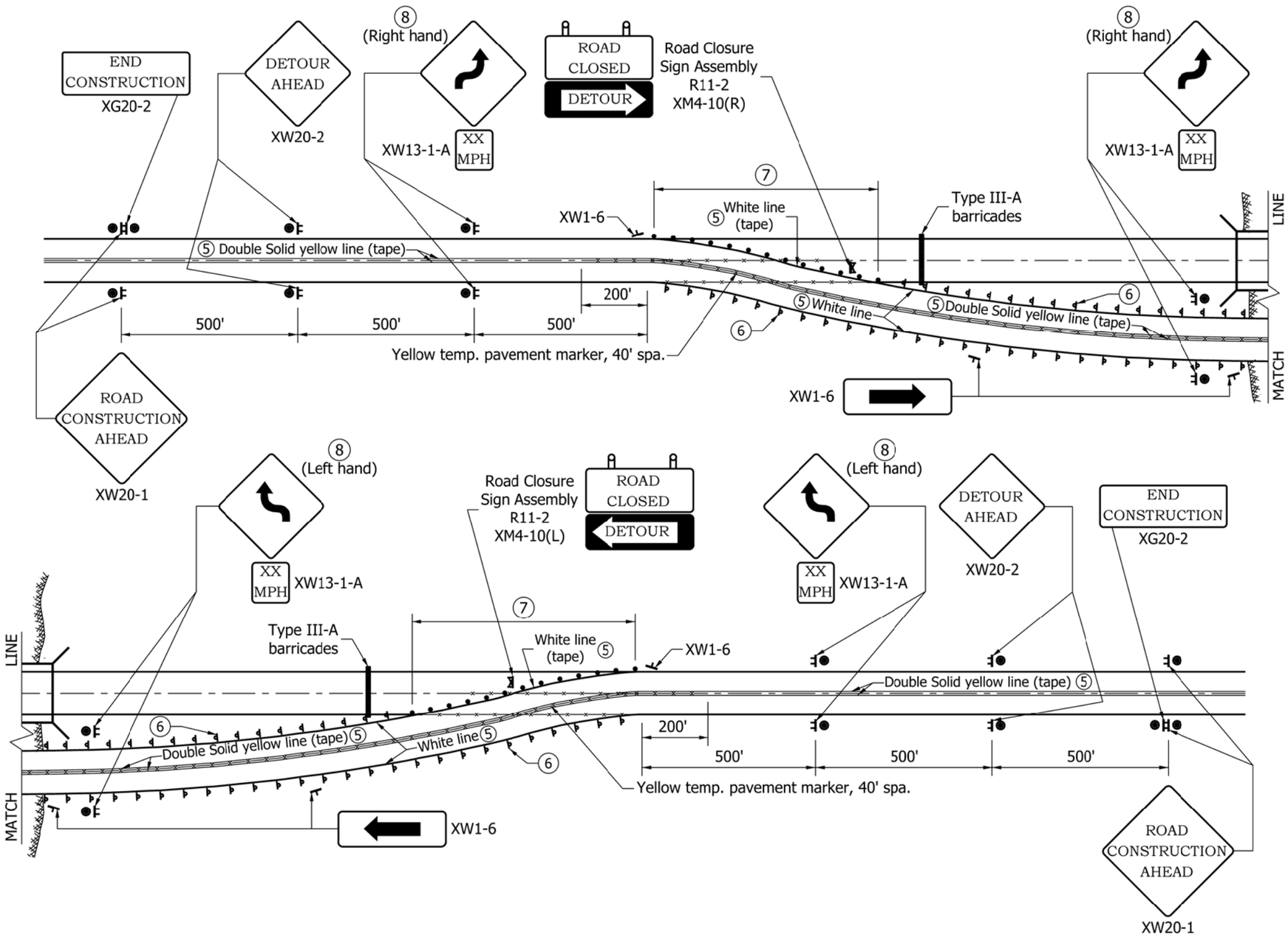

NOTES:

1. See Standard Drawing E 713-TCTR-04 for notes that apply to this sheet.
2. See Standard Drawing E 801-TCLG-01 for standard notes and legend.

INDIANA DEPARTMENT OF TRANSPORTATION

TEMPORARY RUNAROUND SIGNING AND MARKING

SEPTEMBER 2011

STANDARD DRAWING NO. E 713-TCTR-03

RICHARD L. VanCLEAVE REGISTERED No. 9750 STATE OF INDIANA PROFESSIONAL ENGINEER

DESIGN STANDARDS ENGINEER

DETAILS PLACED IN THIS FORMAT 9/1/2011

/s/ Richard L. VanCleave 9/01/11

DESIGN STANDARDS ENGINEER DATE

/s/ Mark A. Miller 9/01/11

CHIEF HIGHWAY ENGINEER DATE

ORIGINALLY APPROVAL ON SEPTEMBER 9/1/97

GENERAL NOTES:

1. The pavement section for trucks count exceeding the values shown in (S) in the Legend shall be as shown elsewhere in the plans.

   3. A temporary bridge or temporary pipe shall be used as specified. A 28'-0 clear roadway width shall be provided on a temporary bridge.

(4) The connection of the temporary runaround to the existing pavement shall be outside the limits of the approach pavement removal.

(5) Temporary pavement markings will be required as shown. The contractor shall have the option of using temporary tape or paint for all temporary pavement markings except where otherwise specified.

(6) Delineators type D-2 (white) shall be placed at 30 ft maximum spacing on both sides throughout the length of the temporary runaround, including across the temporary structure. If a temporary bridge is used, type 3 object markers shall be placed at all four corners in accordance with the MUTCD.

(7) Spacing of drums at this location shall be 20 ft.

(8) If the runaround posted speed limit is greater than 30 mph the reverse curve sign, XW1-4 (36" x 36"), shall be used at this location.
If the runaround posted advisory speed limit is 30 mph or less, the reverse turn sign, XW1-3 (36" x 36") shall be used.

LEGEND:

Delineator type D-2 (white)

(S) Pavement section for truck count, AADTT < 500, shall be:

165 #/yd² HMA Surface, Type A, on
275 #/yd² HMA Intermediate, Type A, on
6 in. compacted aggregate, size No. 53, Base, on
Type III Subgrade Treatment
(See Genaral Note #1)

INDIANA DEPARTMENT OF TRANSPORTATION

TEMPORARY RUNAROUND
GENERAL NOTES

SEPTEMBER 2010

STANDARD DRAWING NO. E 713-TCTR-04

RICHARD L. VanCLEAVE
REGISTERED
No. 9750
STATE OF INDIANA
PROFESSIONAL ENGINEER

DESIGN STANDARDS ENGINEER

/s/ Richard L. VanCleave 09/01/10
DESIGN STANDARDS ENGINEER DATE

/s/ Mark A. Miller 09/01/10
CHIEF HIGHWAY ENGINEER DATE

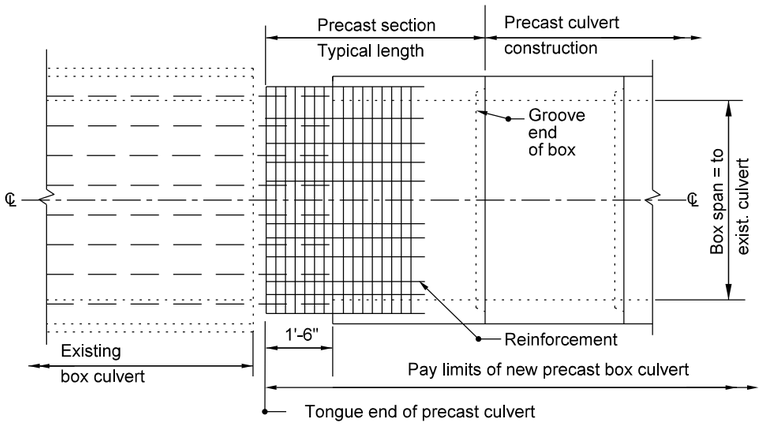

SECTION A-A CONNECTION VIEW

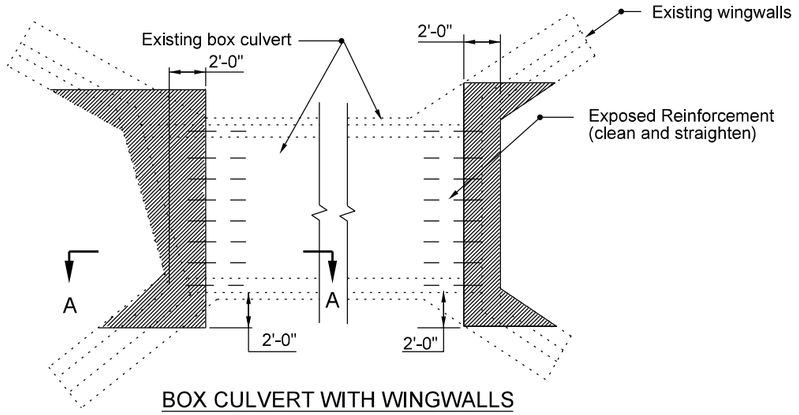

BOX CULVERT WITH WINGWALLS
EXTENSION PREPARATION

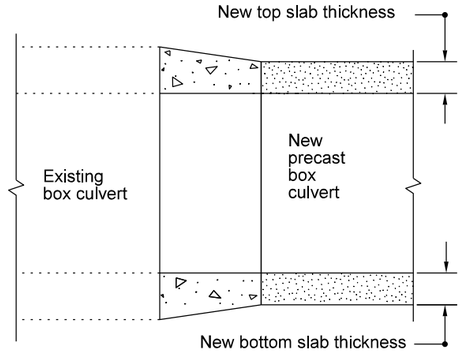

SECTION A-A AND B-B
(Showing cast-in-place section)

LEGEND :

- Removal
- Existing structure
- New element or structure

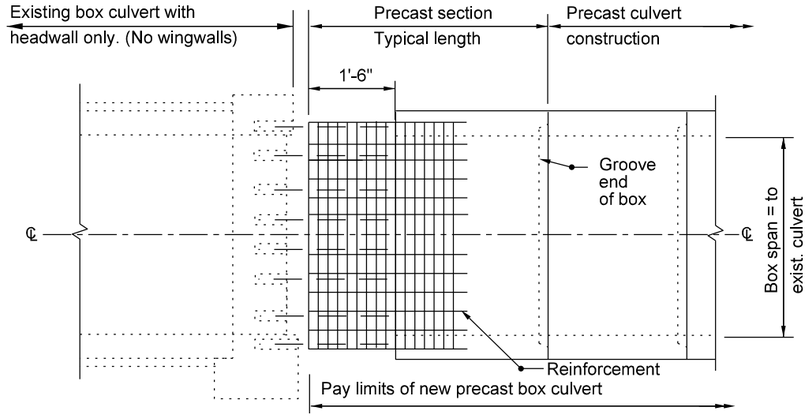

SECTION B-B CONNECTION VIEW

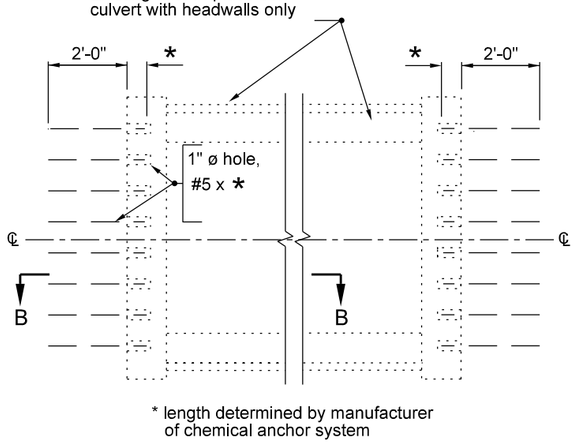

* length determined by manufacturer
of chemical anchor system

BOX CULVERT WITH HEADWALLS ONLY
EXTENSION PREPARATION

INDIANA DEPARTMENT OF TRANSPORTATION

PRECAST BOX-CULVERT EXTENSION

SEPTEMBER 2010

STANDARD DRAWING NO. E 714-BCEX-01

RICHARD L. VanCLEAVE
REGISTERED
No. 9750
STATE OF
INDIANA
PROFESSIONAL ENGINEER

DESIGN STANDARDS ENGINEER

/s/ Richard L.VanCleave — *09/01/10*
DESIGN STANDARDS ENGINEER — DATE

/s/ Mark A. Miller — *09/01/10*
CHIEF HIGHWAY ENGINEER — DATE

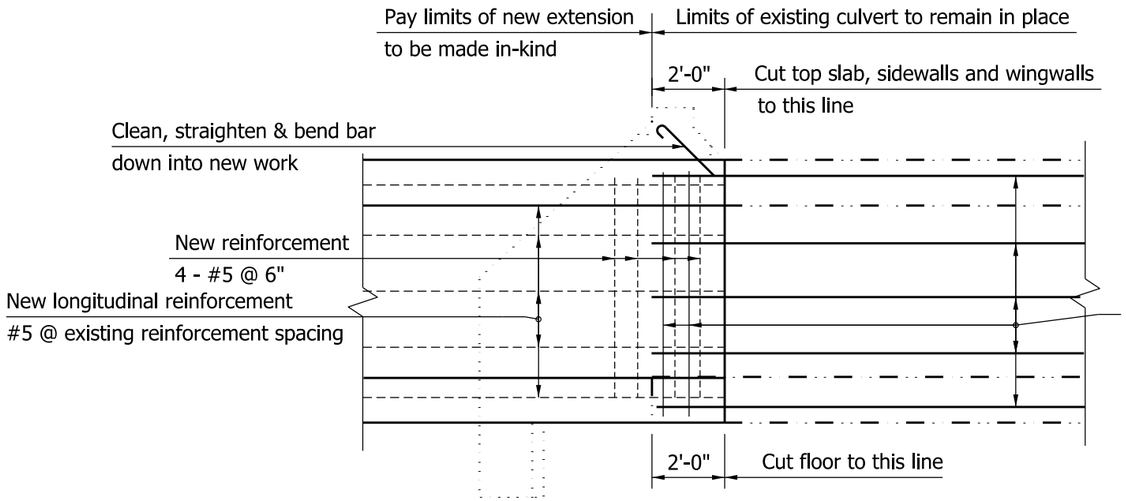

LONGITUDINAL SECTION
FOR ALL CULVERTS

NOTES:

1. Before removing existing concrete, saw around the perimeter of the removal areas on the interior and exterior of the culvert to a depth of 1".
2. New horizontal reinforcement shall be anchored into the culvert walls with bar hooks.

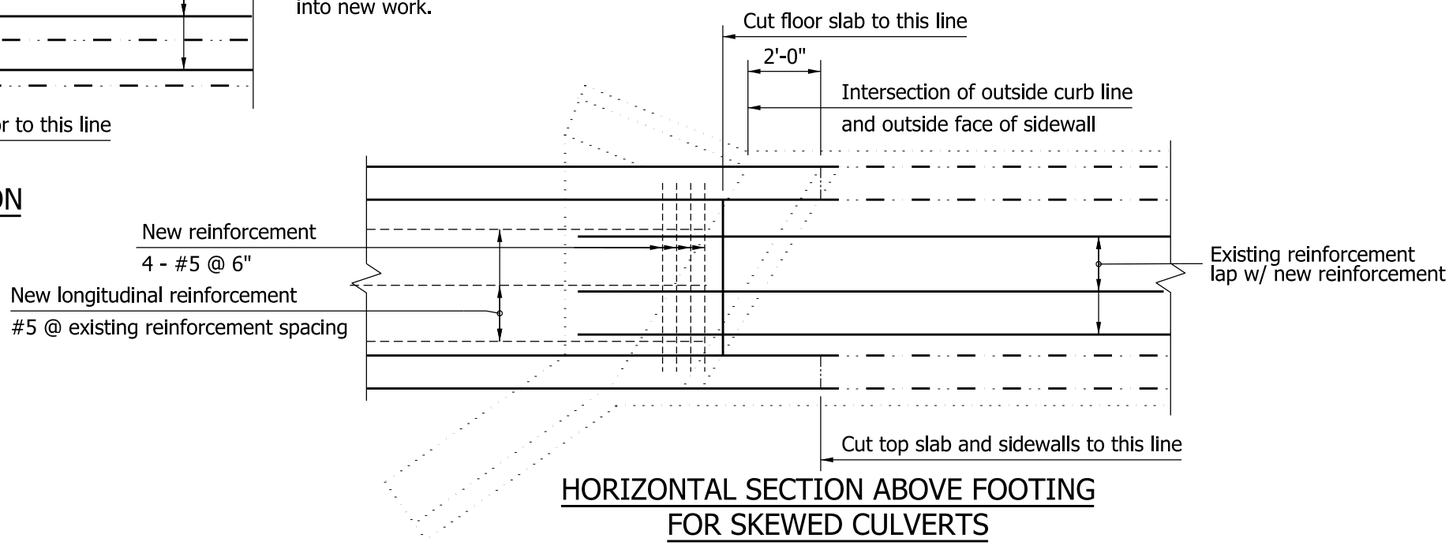

HORIZONTAL SECTION ABOVE FOOTING
FOR SKEWED CULVERTS

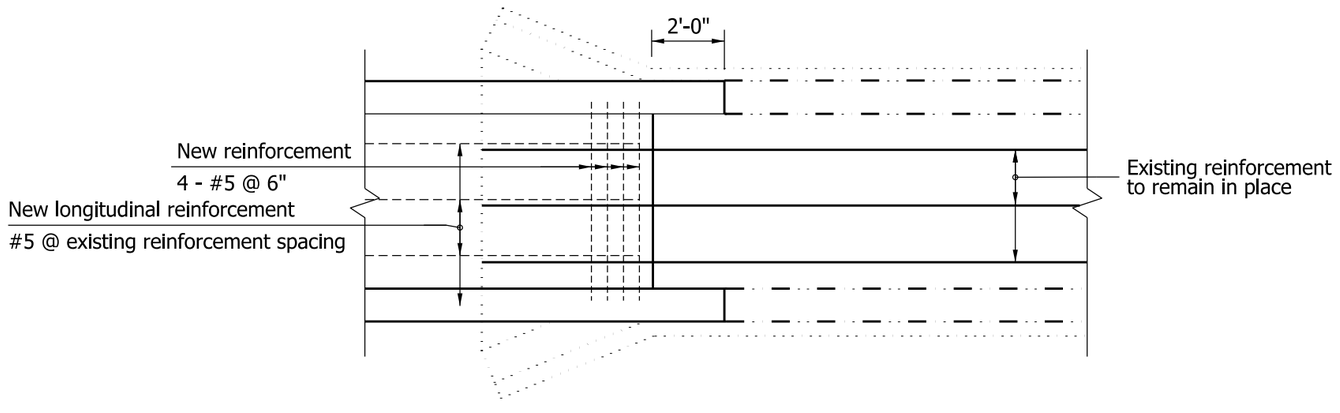

HORIZONTAL SECTION ABOVE FOOTING
FOR SQUARE CULVERTS

INDIANA DEPARTMENT OF TRANSPORTATION

CAST-IN-PLACE BOX-CULVERT EXTENSION

SEPTEMBER 2010

STANDARD DRAWING NO. E 714-BCEX-02

RICHARD L. VanCLEAVE
REGISTERED
No. 9750
STATE OF INDIANA
PROFESSIONAL ENGINEER

DESIGN STANDARDS ENGINEER

/s/ Richard L.VanCleave 09/01/10
DESIGN STANDARDS ENGINEER DATE

/s/ Mark A. Miller 09/01/10
CHIEF HIGHWAY ENGINEER DATE

Top and sides of structure

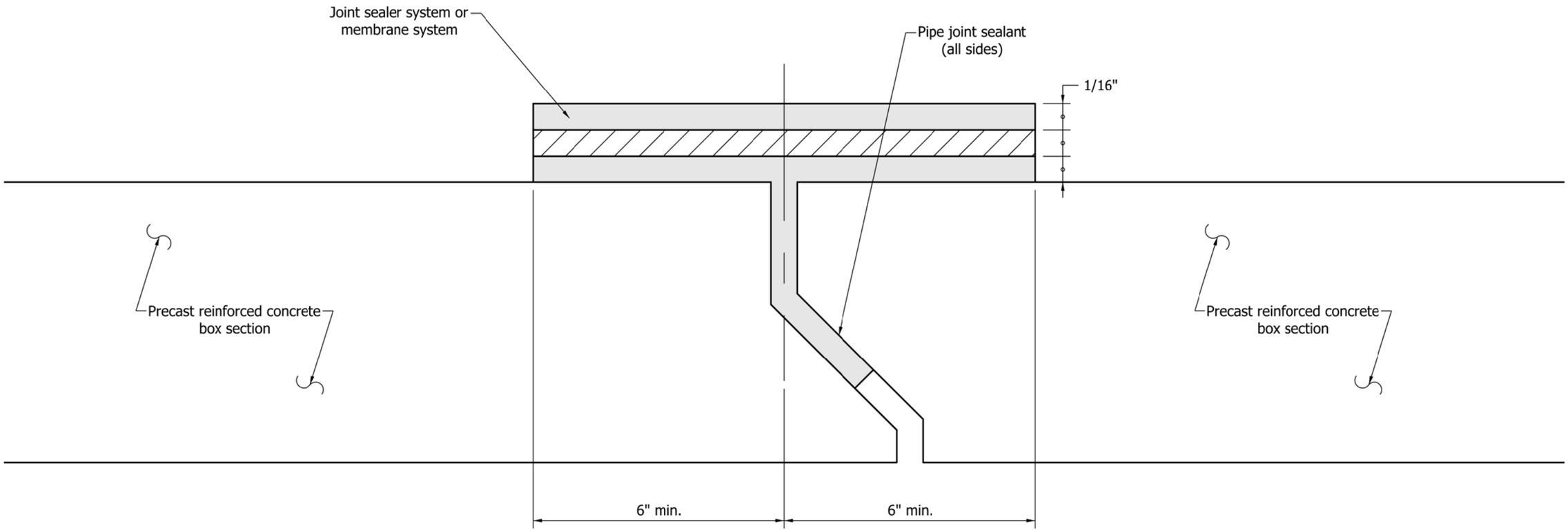

Inside of structure

INDIANA DEPARTMENT OF TRANSPORTATION

PRECAST REINFORCED CONCRETE BOX SECTION JOINT

SEPTEMBER 2011

STANDARD DRAWING NO. E 714-BCJT-01

RICHARD L. VanCLEAVE REGISTERED No. 9750 STATE OF INDIANA PROFESSIONAL ENGINEER

DESIGN STANDARDS ENGINEER

/s/ Richard L. VanCleave 09/01/11

DESIGN STANDARDS ENGINEER DATE

/s/ Mark A. Miller 09/01/11

CHIEF HIGHWAY ENGINEER DATE

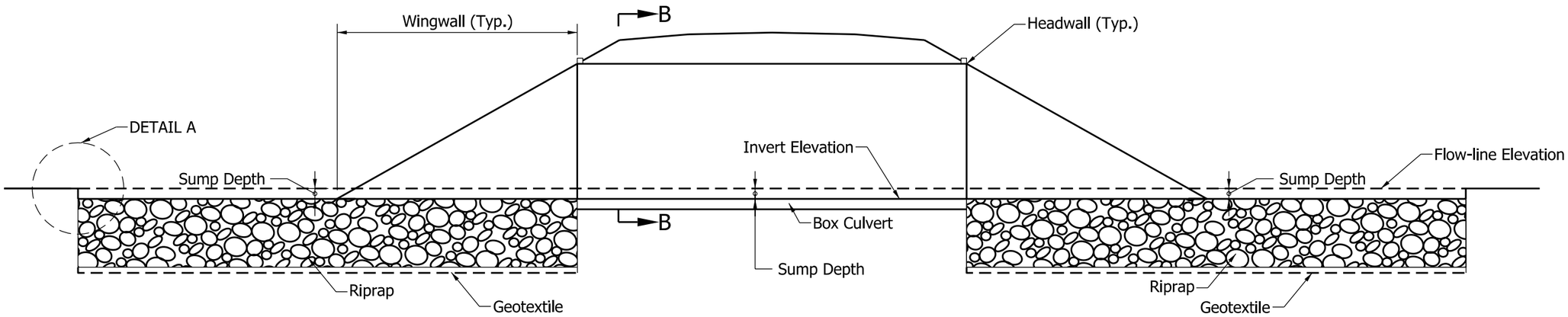

SECTION A-A ELEVATION

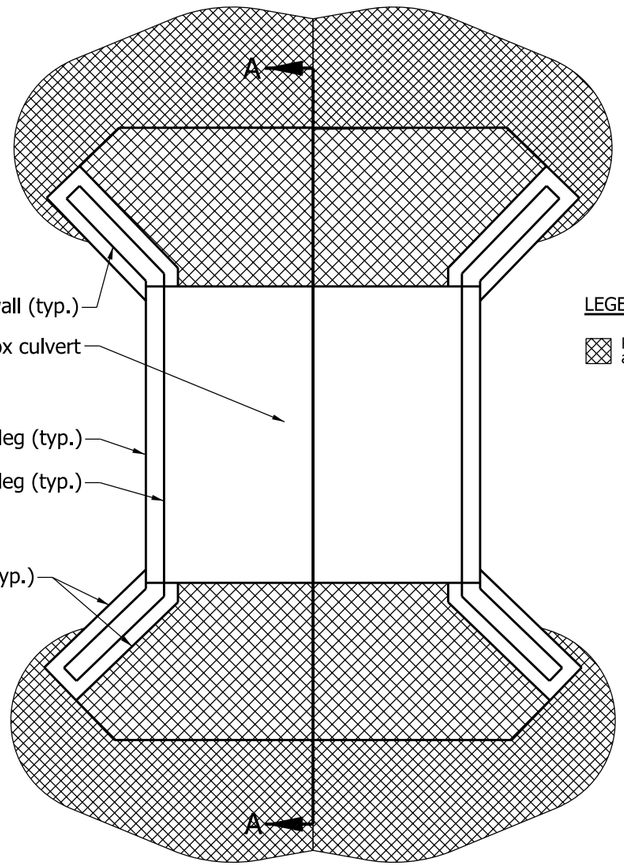

PLAN - WITH WINGWALLS

LEGEND:

Riprap on geotextiles as shown on the plans.

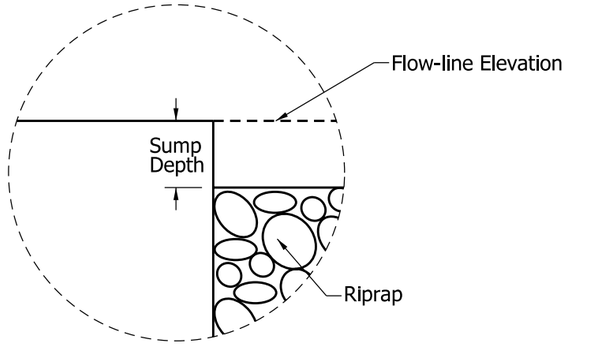

DETAIL A

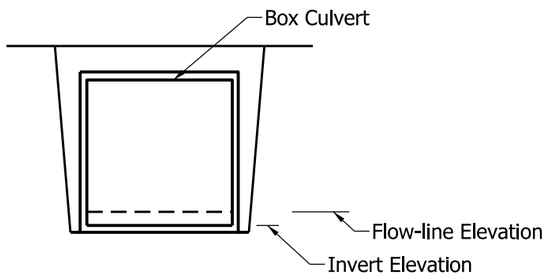

SECTION B-B

INDIANA DEPARTMENT OF TRANSPORTATION

BOX CULVERT SUMPING AND SCOUR PROTECTION

SEPTEMBER 2011

STANDARD DRAWING NO. E 714-BCSP-01

RICHARD L. VanCLEAVE REGISTERED No. 9750 STATE OF INDIANA PROFESSIONAL ENGINEER

DESIGN STANDARDS ENGINEER

/s/ Richard L.VanCleave 09/01/11
DESIGN STANDARDS ENGINEER DATE

/s/ Mark A. Miller 09/01/11
CHIEF HIGHWAY ENGINEER DATE

REINFORCED CONCRETE PIPE									
D	H	R	S	SINGLE PIPE		DOUBLE PIPE		TRIPLE PIPE	
				G	CU.YDS.CONC. 2 ANCHORS	G	CU.YDS.CONC. 2 ANCHORS	G	CU.YDS.CONC. 2 ANCHORS
42"	3'-3	2'-7½"	6'-3	5'-3	2.5	11'-6	5.5	17'-9	8.6
48"	3'-5	2'-11	6'-10	5'-10	2.8	12'-8	6.2	19'-6	9.6
54"	3'-7	3'-2½"	7'-8	6'-5	3.2	14'-1	7.1	21'-9	11.1
60"	3'-9	3'-6	8'-6	7'-0	3.5	15'-6	8.0	24'-0	12.5
66"	3'-11	3'-9½"	9'-4	7'-7	3.9	16'-11	9.0	26'-3	14.1
72"	4'-1	4'-1	10'-2	8'-2	4.3	18'-4	10.0	28'-6	15.7
78"	4'-3	4'-4½"	11'-0	8'-9	4.7	19'-9	11.0	30'-9	17.3
84"	4'-5	4'-8	11'-10	9'-4	5.1	21'-2	12.1	33'-0	19.0
90"	4'-7	4'-11½"	12'-8	9'-11	5.5	22'-7	13.2	35'-3	20.8
96"	4'-9	5'-3	13'-6	10'-6	6.0	24'-0	14.3	37'-6	22.7
102"	4'-11	5'-6½"	14'-1	11'-1	6.4	25'-2	15.3	39'-3	24.2
108"	5'-1	5'-10	14'-8	11'-8	6.9	26'-4	16.3	41'-0	25.7
114"	5'-3	6'-1½"	15'-3	12'-3	7.4	27'-6	17.3	42'-9	27.3
120"	5'-5	6'-5	15'-10	12'-10	7.8	28'-8	18.4	44'-6	28.9
126"	5'-7	6'-8½"	16'-5	13'-5	8.3	29'-10	19.4	46'-3	30.5
132"	5'-9	7'-0	17'-0	14'-0	8.8	31'-0	20.5	48'-0	32.2
138"	5'-11	7'-3½"	17'-7	14'-7	9.4	32'-2	21.6	49'-9	33.9
144"	6'-1	7'-7	18'-2	15'-2	9.9	33'-4	22.8	51'-6	35.6

CORRUGATED ALUMINUM ALLOY OR STEEL PIPE									
D	H	R	S	SINGLE PIPE		DOUBLE PIPE		TRIPLE PIPE	
				G	CU.YDS.CONC. 2 ANCHORS	G	CU.YDS.CONC. 2 ANCHORS	G	CU.YDS.CONC. 2 ANCHORS
42"	2'-11	2'-4	5'-8	4'-8	2.1	10'-4	4.7	16'-0	7.3
48"	3'-1	2'-7	6'-2	5'-2	2.4	11'-4	5.3	17'-6	8.2
54"	3'-3	2'-10	6'-11	5'-8	2.7	12'-7	6.1	19'-6	9.5
60"	3'-4	3'-1	7'-8	6'-2	3.0	13'-10	6.7	21'-6	10.5
66"	3'-5	3'-4	8'-5	6'-8	3.2	15'-1	7.5	23'-6	11.6
72"	3'-7	3'-7	9'-2	7'-2	3.6	16'-4	8.3	25'-6	13.0
78"	3'-9	3'-10	9'-11	7'-8	3.9	17'-7	9.1	27'-6	14.4
84"	3'-10	4'-1	10'-8	8'-2	4.2	18'-10	9.9	29'-6	15.6
90"	3'-11	4'-4	11'-5	8'-8	4.5	20'-1	10.7	31'-6	16.8
96"	4'-1	4'-7	12'-2	9'-2	4.8	21'-4	11.6	33'-6	18.4
102"	4'-2	4'-10	12'-8	9'-8	5.1	22'-4	12.2	35'-0	19.3
108"	4'-4	5'-1	13'-2	10'-2	5.5	23'-4	13.0	36'-6	20.6
114"	4'-5	5'-4	13'-8	10'-8	5.8	24'-4	13.7	38'-0	21.6
120"	4'-7	5'-7	14'-2	11'-2	6.2	25'-4	14.6	39'-6	22.9
126"	4'-8	5'-10	14'-8	11'-8	6.5	26'-4	15.2	41'-0	23.9
132"	4'-10	6'-1	15'-2	12'-2	6.9	27'-4	16.1	42'-6	25.3
138"	4'-11	6'-4	15'-8	12'-8	7.3	28'-4	16.8	44'-0	26.4
144"	5'-1	6'-7	16'-2	13'-2	7.7	29'-4	17.8	45'-6	27.8

GENERAL NOTES

1. Refer to Standard Drawings E 715-SPCA-01 and E 715-SPCA-02 for single pipe anchor details.
2. Refer to Standard Drawings E 715-MPCA-01 and E 715-MPCA-02 for multiple pipe anchor details.

LEGEND

D – Pipe diameter
H – Anchor height
R – Dimension from anchor edge to ℄ of pipe
S – Dimension between ℄ of adjacent pipes
G – Overall anchor length

INDIANA DEPARTMENT OF TRANSPORTATION

CONCRETE ANCHOR TABLE

JANUARY 1998

STANDARD DRAWING NO. E 715-ANCH-01

ANTHONY L. UREMOVICH REGISTERED No. 18095 STATE OF INDIANA PROFESSIONAL ENGINEER

DESIGN STANDARDS ENGINEER

DETAILS PLACED IN THIS FORMAT 11-15-99

/s/ Anthony L. Uremovich 11-15-99
DESIGN STANDARDS ENGINEER DATE

/s/ Firooz Zandi 11-15-99
CHIEF HIGHWAY ENGINEER DATE

ORIGINALLY APPROVED 1-02-98

REINFORCED CONCRETE HORIZONTAL ELLIPTICAL PIPE

SPAN	RISE	H	R	S	SINGLE PIPE		DOUBLE PIPE		TRIPLE PIPE	
					G	CU.YDS.CONC., 2 ANCHORS	G	CU.YDS.CONC., 2 ANCHORS	G	CU.YDS.CONC., 2 ANCHORS
45"	29"	3'-0	2'-9	6'-6	5'-6	2.5	12'-0	5.5	18'-6	8.5
49"	32"	3'-1	2'-11½	6'-11	5'-11	2.7	12'-10	5.9	19'-9	9.2
53"	34"	3'-2	3'-1½	7'-6	6'-3	2.9	13'-9	6.4	21'-3	10.0
60"	38"	3'-3	3'-5½	8'-5	6'-11	3.2	13'-4	7.3	23'-9	11.3
68"	43"	3'-5	3'-10	9'-6	7'-8	3.6	17'-2	8.3	26'-8	13.0
76"	48"	3'-7	4'-2½	10'-7	8'-5	4.1	19'-0	9.4	29'-7	14.8
83"	53"	3'-8	4'-6½	11'-7	9'-1	4.5	20'-8	10.5	32'-3	16.5
91"	58"	3'-10	4'-11	12'-8	9'-10	4.9	22'-6	11.7	35'-2	18.4
98"	63"	4'-0	5'-3	13'-6	10'-6	5.3	24'-0	12.7	37'-6	20.1
106"	68"	4'-2	5'-7½	14'-3	11'-3	5.8	25'-6	13.7	39'-9	21.7
113"	72"	4'-3	5'-11½	14'-11	11'-11	6.2	26'-10	14.6	41'-9	23.0
121"	77"	4'-5	6'-4	15'-8	12'-8	6.7	28'-4	15.7	44'-0	24.6
128"	82"	4'-6	6'-8	16'-4	13'-4	7.2	29'-8	16.6	46'-0	26.1
136"	87"	4'-8	7'-0	17'-0	14'-0	7.6	31'-0	17.6	48'-0	27.6
143"	92"	4'-10	7'-4	17'-8	14'-8	8.1	32'-4	18.7	50'-0	29.2
151"	97"	5'-0	7'-8½	18'-5	15'-5	8.7	33'-10	19.9	52'-3	31.0
166"	106"	5'-3	8'-5	19'-10	16'-10	9.7	36'-8	22.0	56'-6	34.4
180"	116"	5'-6	9'-1	21'-2	18'-2	10.8	39'-4	24.3	60'-6	37.8

CORRUGATED ALUMINUM ALLOY OR STEEL PIPE-ARCH

SPAN	RISE	H	R	S	SINGLE PIPE		DOUBLE PIPE		TRIPLE PIPE	
					G	CU.YDS.CONC., 2 ANCHORS	G	CU.YDS.CONC., 2 ANCHORS	G	CU.YDS.CONC., 2 ANCHORS
49"	33"	3'-0	2'-7	6'-3	5'-2	2.2	11'-5	4.9	17'-8	7.7
57"	38"	3'-1	2'-11	7'-3	5'-10	2.5	13'-1	5.7	20'-4	8.9
64"	43"	3'-3	3'-2½	8'-1	6'-5	2.8	14'-6	6.4	22'-7	10.1
71"	47"	3'-4	3'-6	9'-0	7'-0	3.0	16'-0	7.2	25'-0	11.3
77"	52"	3'-6	3'-9	9'-9	7'-6	3.3	17'-3	7.9	27'-0	12.5
83"	57"	3'-8	4'-0	10'-6	8'-0	3.5	18'-6	8.6	29'-0	13.6
60"	46"	3'-9	3'-1	7'-8	6'-2	2.9	13'-10	6.7	21'-6	10.5
66"	51"	3'-10	3'-4	8'-5	6'-8	3.1	15'-1	7.4	23'-6	11.6
73"	55"	4'-0	3'-7½	9'-4	7'-3	3.4	16'-7	8.3	25'-11	13.1
81"	59"	4'-2	3'-11½	10'-4	7'-11	3.7	18'-3	9.1	28'-7	14.5
87"	63"	4'-2	4'-2½	11'-1	8'-5	4.0	19'-6	9.8	30'-7	15.6
95"	67"	4'-4	4'-6½	12'-1	9'-1	4.3	21'-2	10.8	33'-3	17.2
103"	71"	4'-6	4'-10½	12'-9	9'-9	4.7	22'-6	11.6	35'-3	18.5
112"	75"	4'-8	5'-3	13'-6	10'-6	5.1	24'-0	12.5	37'-6	19.8
117"	79"	4'-9	5-5½	13'-11	10'-11	5.3	24'-10	12.9	38'-9	20.6
128"	83"	5'-0	5-11	14'-10	11'-10	5.8	26'-8	14.1	41'-6	22.4
137"	87"	5'-2	6'-3	15'-7	12'-7	6.1	28'-1	14.8	43'-8	23.5
142"	91"	5'-4	6'-6	16'-0	13'-0	6.5	29'-0	15.7	45'-0	24.9

GENERAL NOTES

1. Refer to Standard Drawings E 715-SPCA-01 and E 715-SPCA-02 for single anchor details.
2. Refer to Standard Drawing E 715-MPCA-02 for multiple anchor details.

LEGEND

H - Anchor height
R - Dimension from anchor edge to ℄ exterior pipe
S - Dimension between ℄ of adjacent pipes
G - Overall anchor length

INDIANA DEPARTMENT OF TRANSPORTATION

CONCRETE ANCHOR TABLES

JANUARY 1998

STANDARD DRAWING NO. E 715-ANCH-02

ANTHONY L. UREMOVICH REGISTERED No. 18095 STATE OF INDIANA PROFESSIONAL ENGINEER

DESIGN STANDARDS ENGINEER

DETAILS PLACED IN THIS FORMAT 11-15-99

/s/ Anthony L. Uremovich 11-15-99
DESIGN STANDARDS ENGINEER DATE

/s/ Firooz Zandi 11-15-99
CHIEF HIGHWAY ENGINEER DATE

ORIGINALLY APPROVED 1-02-98

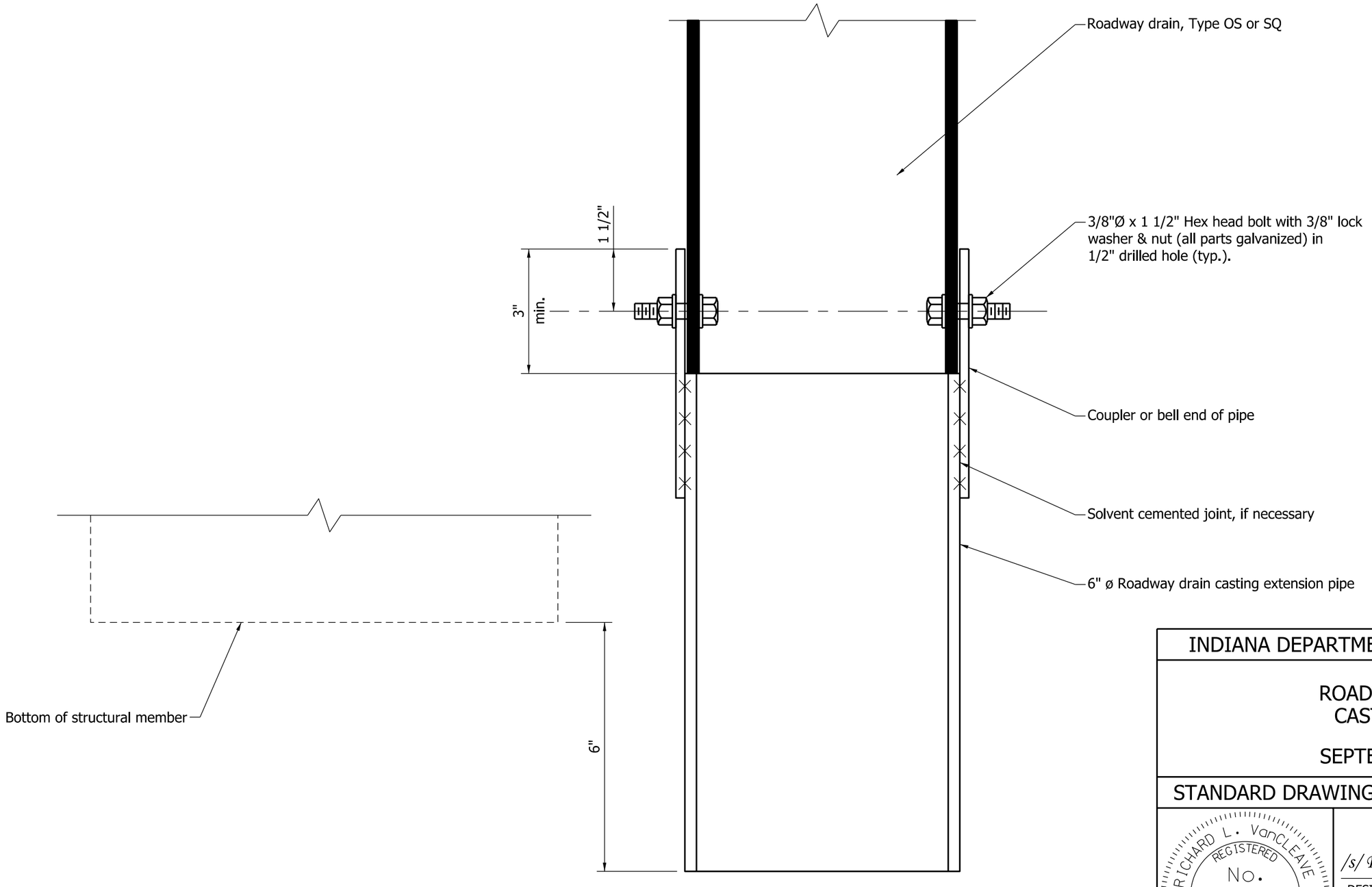

Note: Pipe support brackets not shown for clarity.

INDIANA DEPARTMENT OF TRANSPORTATION

ROADWAY DRAIN
CASTING PIPE

SEPTEMBER 2011

STANDARD DRAWING NO. E 715-BDCG-01

RICHARD L. VanCLEAVE
REGISTERED
No. 9750
STATE OF INDIANA
PROFESSIONAL ENGINEER

DESIGN STANDARDS ENGINEER

/s/ Richard L. VanCleave 09/01/11
DESIGN STANDARDS ENGINEER DATE

/s/ Mark A. Miller 09/01/11
CHIEF HIGHWAY ENGINEER DATE

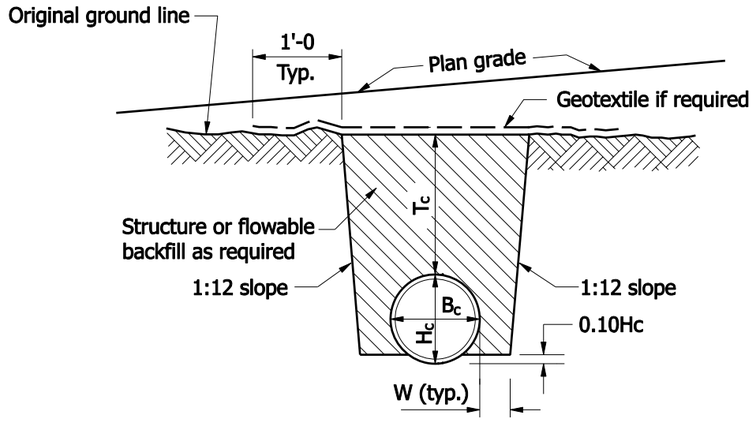

SECTION A-A

LEGEND

H_c = Overall diameter or rise (typ.)

B_c = Overall diameter or span

A = 8" min. for fill height less than 16'
= 12" min. for fill height of 16' or more

T_c = Trench cover depth over pipe

W = 0.3 B_c or 9", whichever is greater

E = Encasement

L_B = Backfill length measured from toe to toe of the 2:1 slopes.

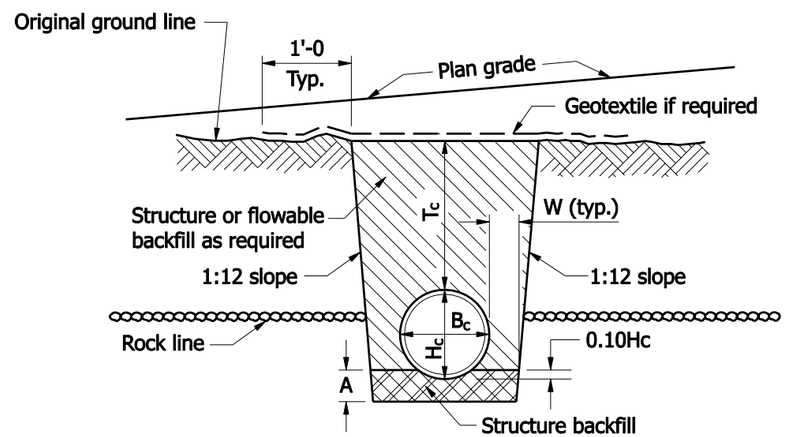

SECTION A-A
ROCK FOUNDATION

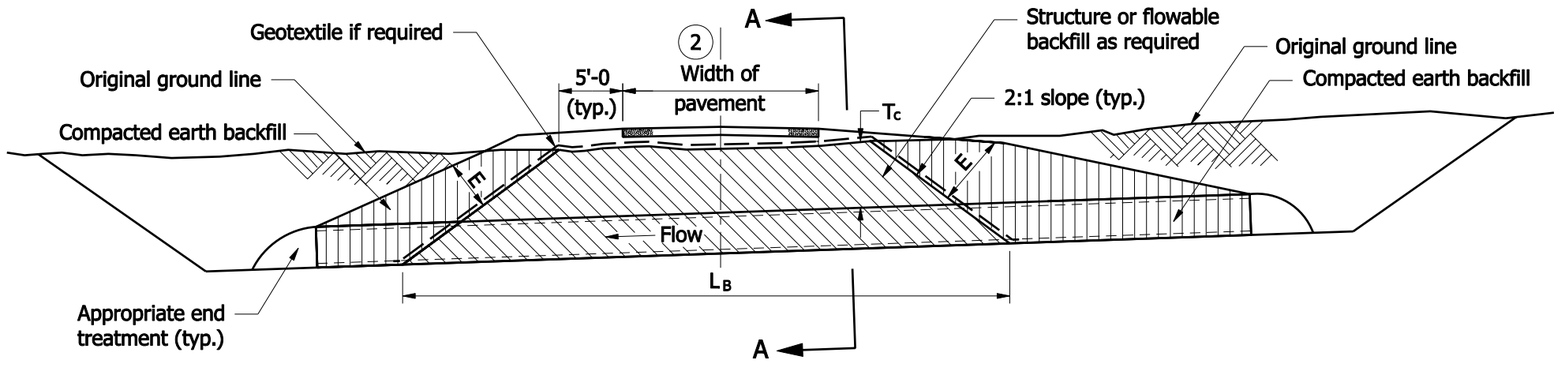

ELEVATION

NOTES :

1. Protective cover shall be constructed prior to running heavy equipment over installed pipes. The minimum covers are listed below:
   a.) 1.5' for $B_c \leq 18"$
   b.) 3' for $18" < B_c \leq 54"$
   c.) 4' for $B_c > 54"$
2. For backfill purposes, paved shoulders, curbs, and sidewalks are considered pavement. See Standard Drawing E 715-BKFL-10 for pavement limits when curbs, paved shoulders, or sidewalks are present.
3. Flowable or structure backfill shall be encased by compacted earth backfill. The minimum encasement shall be 2 ft. If necessary, the 2:1 slope between the flowable or structure backfill and the encasement shall be modified to maintain the minimum 2 ft encasement.

INDIANA DEPARTMENT OF TRANSPORTATION

PIPE BACKFILL METHOD 1
NEW ROADWAY, TRENCH

SEPTEMBER 2008

STANDARD DRAWING NO. E 715-BKFL-01

RICHARD L. VanCLEAVE
REGISTERED
No. 9750
STATE OF INDIANA
PROFESSIONAL ENGINEER

DESIGN STANDARDS ENGINEER

/s/ Richard L. VanCleave 09/02/08
DESIGN STANDARDS ENGINEER — DATE

/s/ Mark A. Miller 09/02/08
CHIEF HIGHWAY ENGINEER — DATE

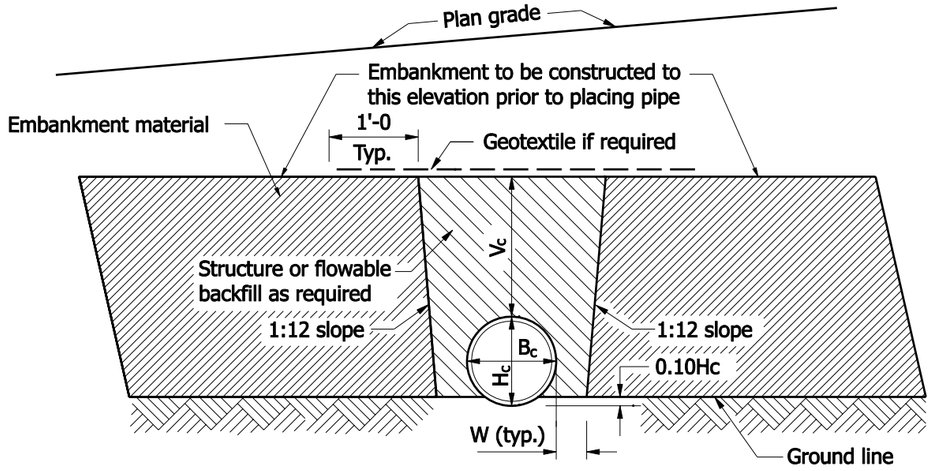

SECTION B-B

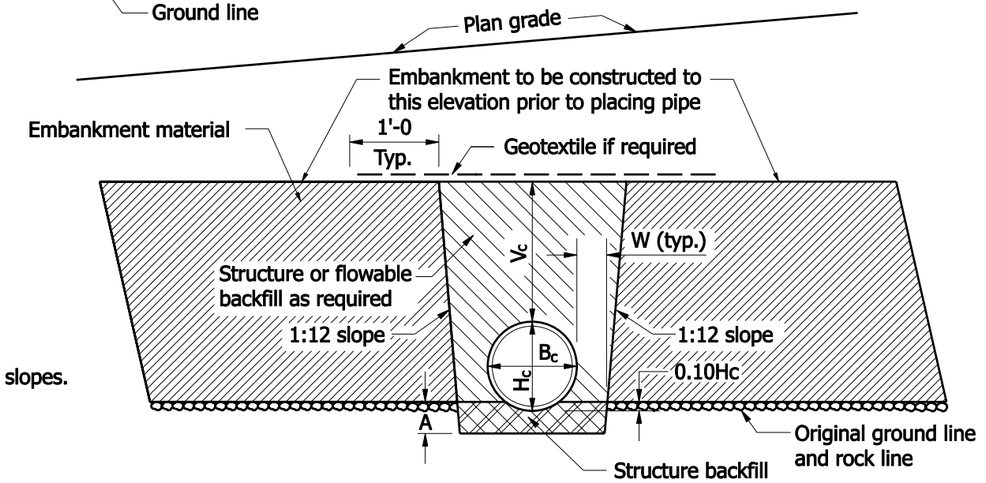

SECTION B-B
ROCK FOUNDATION

LEGEND

H_c = Overall diameter or rise (typ.)

B_c = Overall diameter or span

A = 8" min. for fill height less than 16'
= 12" min. for fill height of 16' or more

V_c = 12" for $B_c \leq 18$"
18" for $B_c > 18$"

W = 0.3 B_c or 9", whichever is greater

L_B = Backfill length measured from toe to toe of the 2:1 slopes.

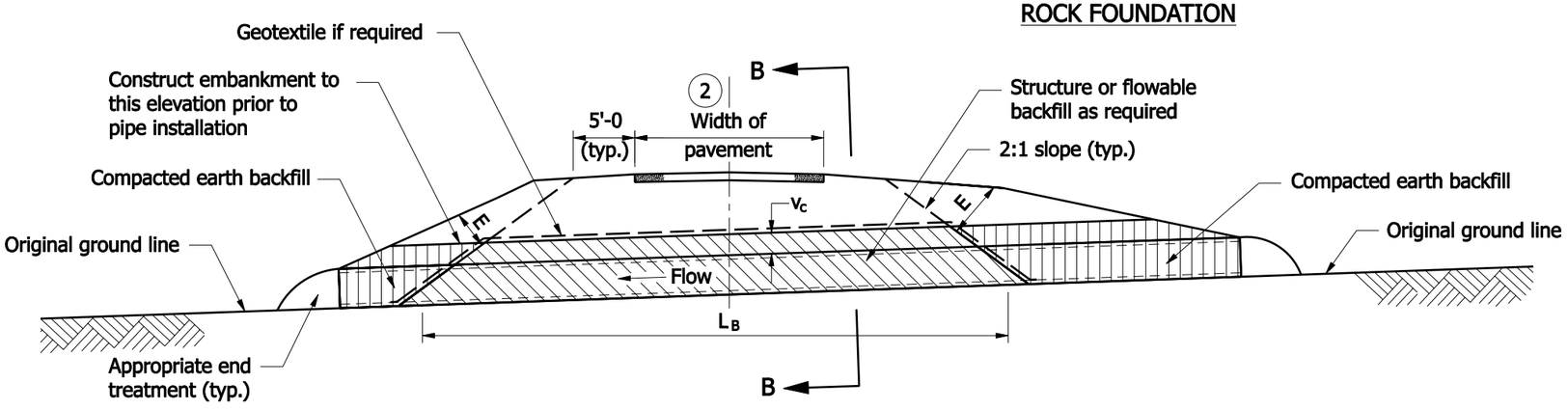

ELEVATION

NOTES :

1. Protective cover shall be constructed prior to running heavy equipment over installed pipes. The minimum covers are listed below:
   a.) 1.5' for $B_c \leq 18$"
   b.) 3' for 18" < $B_c \leq 54$"
   c.) 4' for $B_c > 54$"
2. For backfill purposes, paved shoulders, curbs, and sidewalks are considered pavement. See Standard Drawing E 715-BKFL-10 for pavement limits when curbs, paved shoulders, or sidewalks are present.
3. Flowable or structure backfill shall be encased by compacted earth backfill. The minimum encasement shall be 2 ft. If necessary, the 2:1 slope between the flowable or structure backfill and the encasement shall be modified to maintain the minimum 2 ft encasement.

INDIANA DEPARTMENT OF TRANSPORTATION

PIPE BACKFILL METHOD 1
NEW ROADWAY, EMBANKMENT

SEPTEMBER 2008

STANDARD DRAWING NO. E 715-BKFL-02

RICHARD L. VanCLEAVE REGISTERED No. 9750 STATE OF INDIANA PROFESSIONAL ENGINEER

DESIGN STANDARDS ENGINEER

/s/ Richard L. VanCleave 09/02/08
DESIGN STANDARDS ENGINEER DATE

/s/ Mark A. Miller 09/02/08
CHIEF HIGHWAY ENGINEER DATE

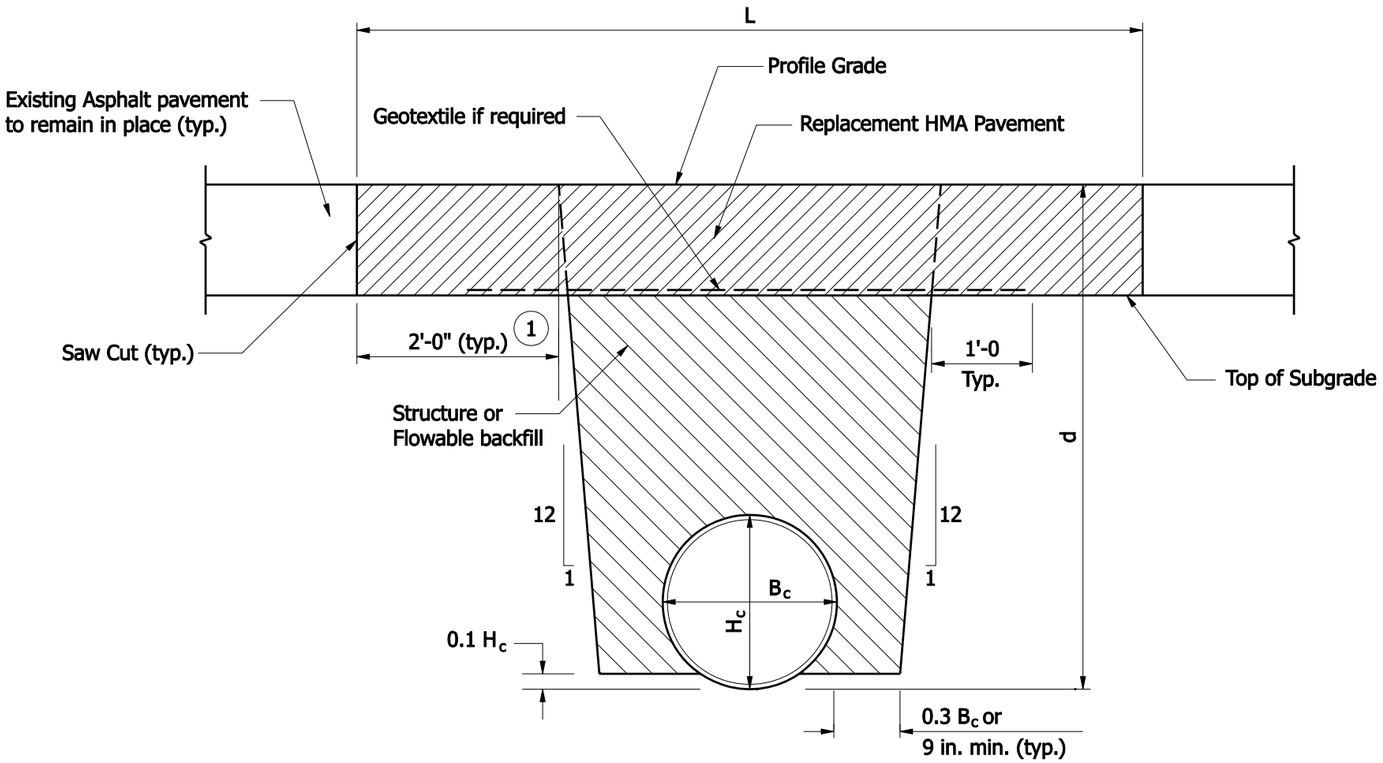

L = Pay limits of pavement removal and pavement replacement (ft); for cross pipe, measured along roadway centerline; for pipe parallel to roadway centerline, measured prependicular to pipe centerline.

B_C = Overall diameter or span (in.)

H_C = Overall diameter or rise (in.)

d = Vertical distance from flowline to profile grade (ft)

ASPHALT REPLACEMENT PAVEMENT

NOTES :

1. Existing subgrade over this distance shall remain in place.
2. The minimum pavement sections shall be as follows:
   HMA: 165 #/syd HMA Surface, Type A,B,C or D on
   variable HMA Intermediate, Type A, B, C or D
3. If underdrains are present, they shall be perpetuated in accordance with the details shown on Standared Drawing E 718-UNDR-01.
4. See Standard Drawing E 715-BKFL-01 for pipe backfill trench elevation view.

INDIANA DEPARTMENT OF TRANSPORTATION

PIPE BACKFILL METHOD 1
EXISTING ROADWAY, TRENCH

SEPTEMBER 2008

STANDARD DRAWING NO. E 715-BKFL-03

RICHARD L. VanCLEAVE
REGISTERED
No. 9750
STATE OF INDIANA
PROFESSIONAL ENGINEER

DESIGN STANDARDS ENGINEER

/s/ Richard L. VanCleave 09/02/08
DESIGN STANDARDS ENGINEER DATE

/s/ Mark A. Miller 09/02/08
CHIEF HIGHWAY ENGINEER DATE

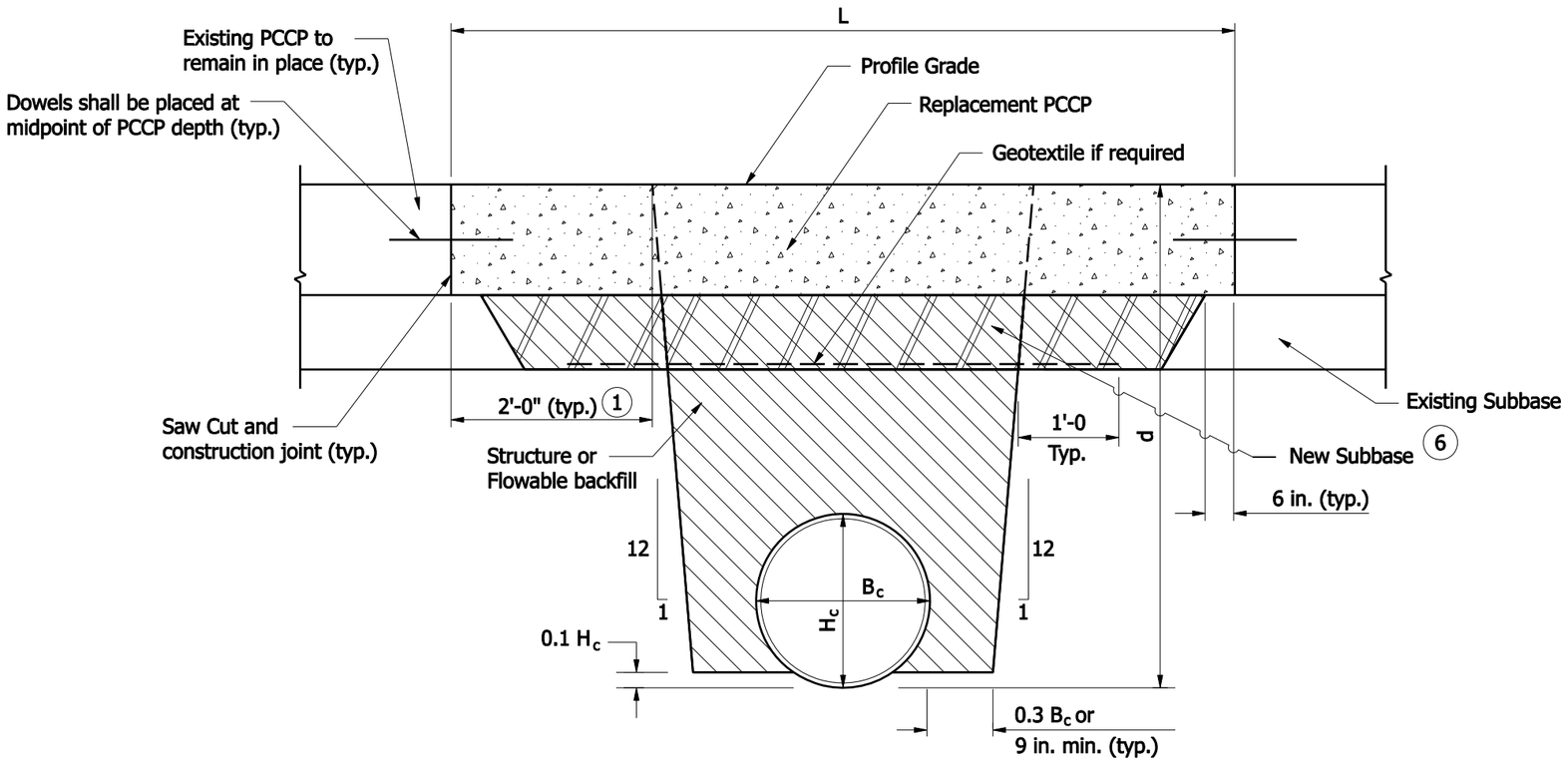

L = Pay limits of pavement removal and pavement replacement (ft); for cross pipe, measured along roadway centerline; for pipe parallel to roadway centerline, measured prependicular to pipe centerline.

B_C = Overall diameter or span (in.)

H_C = Overall diameter or rise (in.)

d = Vertical distance from flowline to profile grade (ft)

PCCP REPLACEMENT PAVEMENT

NOTES :

1. Existing subgrade over this longitudinal distance shall remain in place.
2. The thickness of the replacement PCCP shall match that of the existing concrete pavement.
3. See Standard Drawing E 506-CCPP-01 for subbase, dowels, and construction joint details.
4. If underdrains are present, they shall be perpetuated in accordance with the details shown on Standard Drawing E 718-UNDR-01.
5. See Standard Drawing E 715-BKFL-01 for pipe backfill trench elevation view.
6. New subbase type shall match the existing subbase type and thickness.

INDIANA DEPARTMENT OF TRANSPORTATION

PIPE BACKFILL METHOD 1
EXISTING ROADWAY, TRENCH

SEPTEMBER 2008

STANDARD DRAWING NO. E 715-BKFL-04

RICHARD L. VanCLEAVE REGISTERED No. 9750 STATE OF INDIANA PROFESSIONAL ENGINEER

DESIGN STANDARDS ENGINEER

/s/ Richard L. VanCleave 09/02/08
DESIGN STANDARDS ENGINEER DATE

/s/ Mark A. Miller 09/02/08
CHIEF HIGHWAY ENGINEER DATE

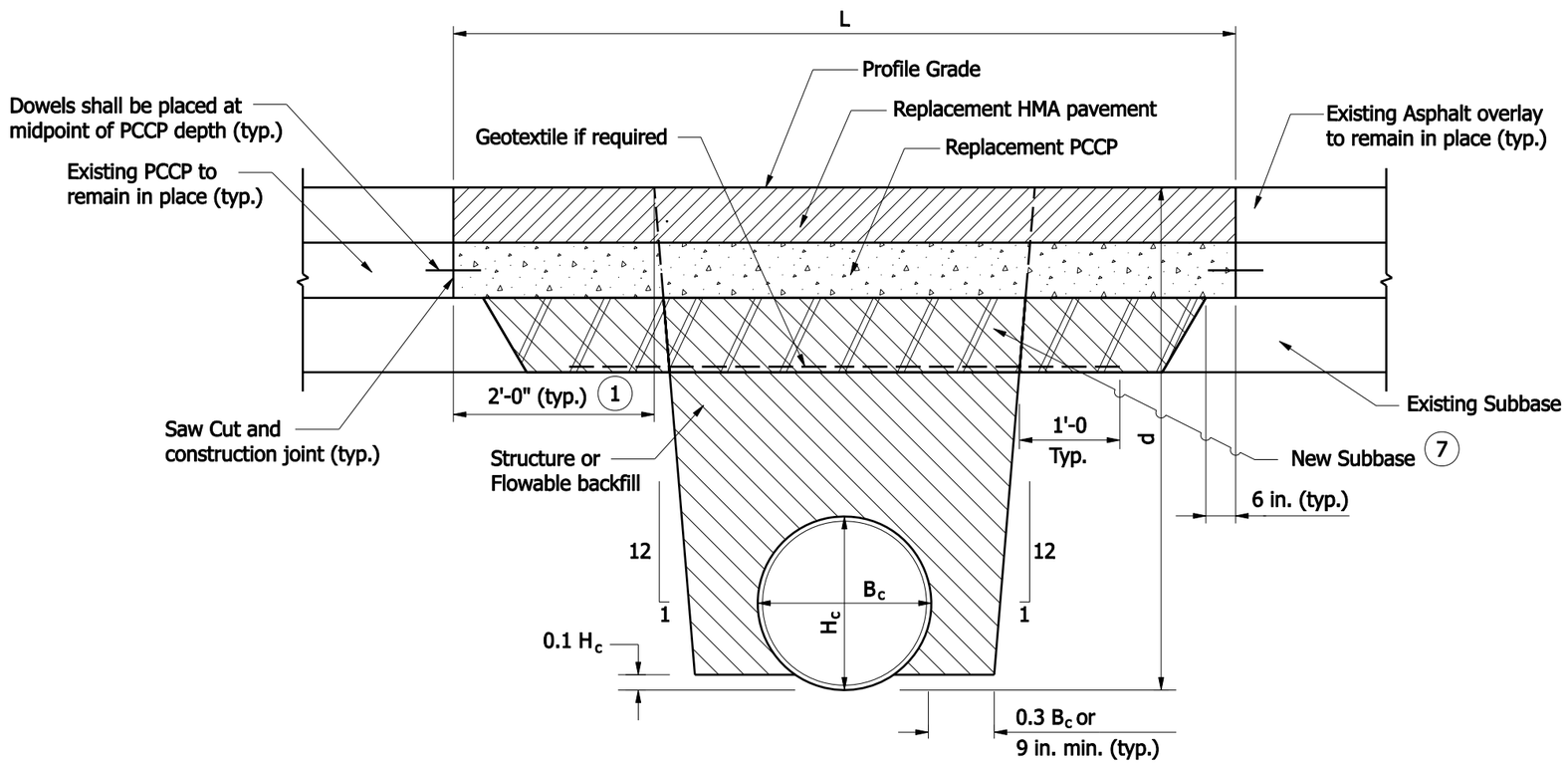

L = Pay limits of pavement removal and pavement replacement (ft); for cross pipe, measured along roadway centerline; for pipe parallel to roadway centerline, measured prependicular to pipe centerline.

B_C = Overall diameter or span (in.)

H_C = Overall diameter or rise (in.)

d = Vertical distance from flowline to profile grade (ft)

COMPOSITE REPLACEMENT PAVEMENT

NOTES :

1. Existing subgrade over this distance shall remain in place.
2. The thickness of the replacement PCCP shall match that of the existing concrete pavement.
3. The minimum pavement sections shall be as follows:
   HMA: 165 #/syd HMA Surface, Type A,B,C or D on
   variable HMA Intermediate, Type A, B, C or D
4. See Standard Drawing E 506-CCPP-01 for subbase, dowels, and construction joint details.
5. If underdrains are present, they shall be perpetuated in accordance with the details shown on Standard Drawing E 718-UNDR-01.
6. See Standard Drawing E 715-BKFL-01 for pipe backfill trench elevation view.
7. New subbase type shall match the existing subbase type and thickness.

INDIANA DEPARTMENT OF TRANSPORTATION

PIPE BACKFILL METHOD 1
EXISTING ROADWAY, TRENCH

SEPTEMBER 2008

STANDARD DRAWING NO. E 715-BKFL-05

RICHARD L. VanCLEAVE REGISTERED No. 9750 STATE OF INDIANA PROFESSIONAL ENGINEER

DESIGN STANDARDS ENGINEER

/s/ Richard L. VanCleave 09/02/08
DESIGN STANDARDS ENGINEER DATE

/s/ Mark A. Miller 09/02/08
CHIEF HIGHWAY ENGINEER DATE

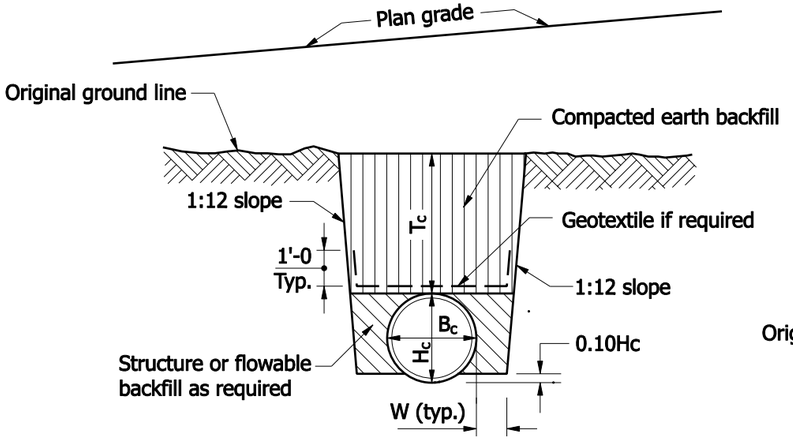

SECTION C-C

LEGEND

- H_c = Overall diameter or rise (typ.)
- B_c = Overall diameter or span
- A = 8" min. for fill height less than 16'
  = 12" min. for fill height of 16' or more
- T_c = Trench cover depth over pipe
- W = 0.3 B_c or 9", whichever is greater
- E = Encasement
- L_B = Backfill length measured from toe to toe of the 2:1 slopes.

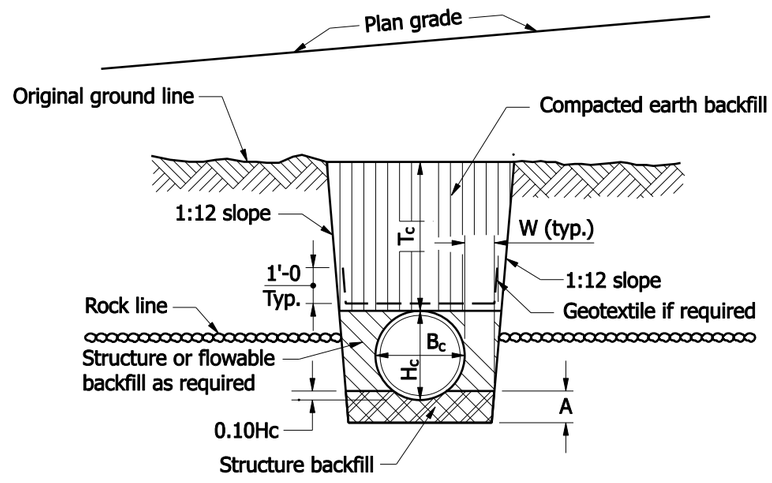

SECTION C-C
ROCK FOUNDATION

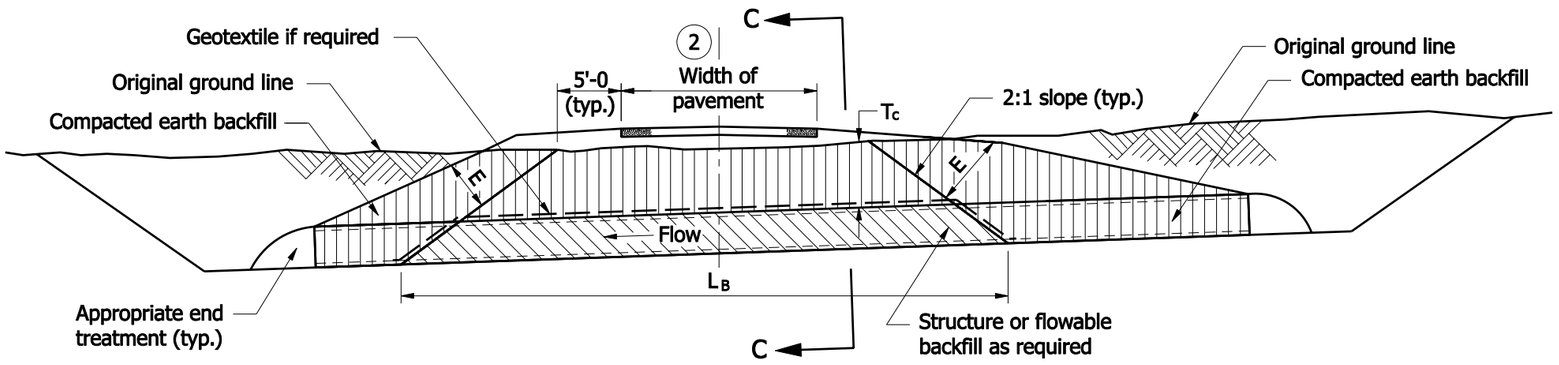

ELEVATION

NOTES :

1. Protective cover shall be constructed prior to running heavy equipment over installed pipes. The minimum covers are listed below:
   a.) 1.5' for $B_c \leq 18"$
   b.) 3' for $18" < B_c \leq 54"$
   c.) 4' for $B_c > 54"$
2. For backfill purposes, paved shoulders, curbs, and sidewalks are considered pavement. See Standard Drawing E 715-BKFL-10 for pavement limits when curbs, paved shoulders, or sidewalks are present.
3. Flowable or structure backfill shall be encased by compacted earth backfill. The minimum encasement shall be 2 ft. If necessary, the 2:1 slope between the flowable or structure backfill and the encasement shall be modified to maintain the minimum 2 ft encasement.

INDIANA DEPARTMENT OF TRANSPORTATION

PIPE BACKFILL METHOD 2
NEW OR EXISTING DRIVE

SEPTEMBER 2008

STANDARD DRAWING NO. E 715-BKFL-06

RICHARD L. VanCLEAVE
REGISTERED
No. 9750
STATE OF INDIANA
PROFESSIONAL ENGINEER

DESIGN STANDARDS ENGINEER

/s/ Richard L. VanCleave 09/02/08
DESIGN STANDARDS ENGINEER — DATE

/s/ Mark A. Miller 09/02/08
CHIEF HIGHWAY ENGINEER — DATE

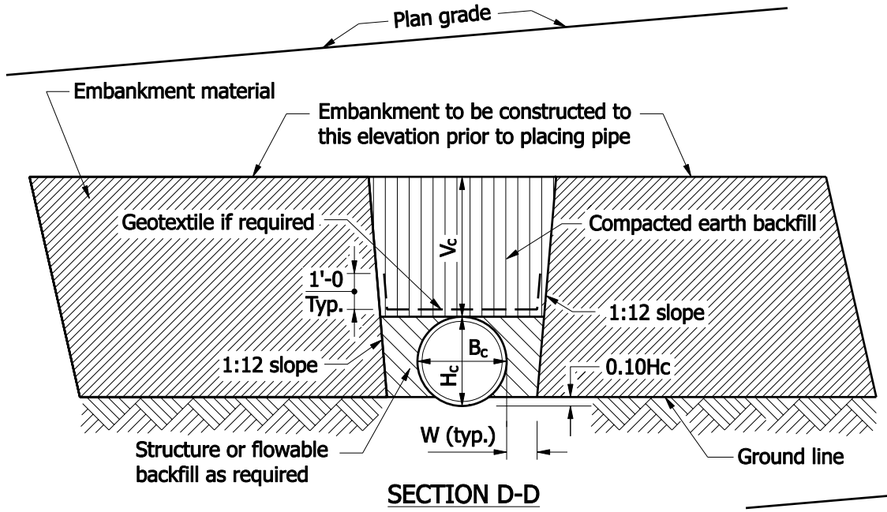

SECTION D-D

LEGEND

H_c = Overall diameter or rise (typ.)

B_c = Overall diameter or span

A = 8" min. for fill height less than 16'
= 12" min. for fill height of 16' or more

V_c = 12" for $B_c \leq 18$"
18" for $B_c > 18$"

W = 0.3 B_c or 9", whichever is greater

E = Encasement

L_B = Backfill length measured from toe to toe of the 2:1 slopes.

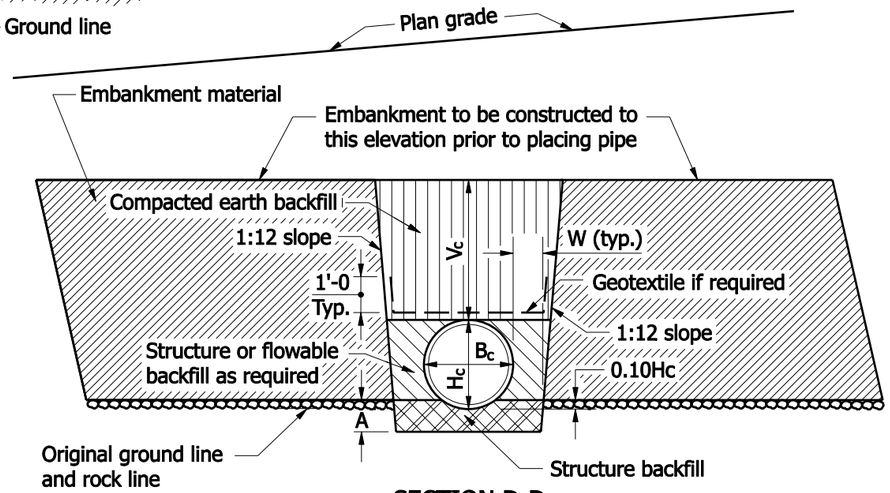

SECTION D-D
ROCK FOUNDATION

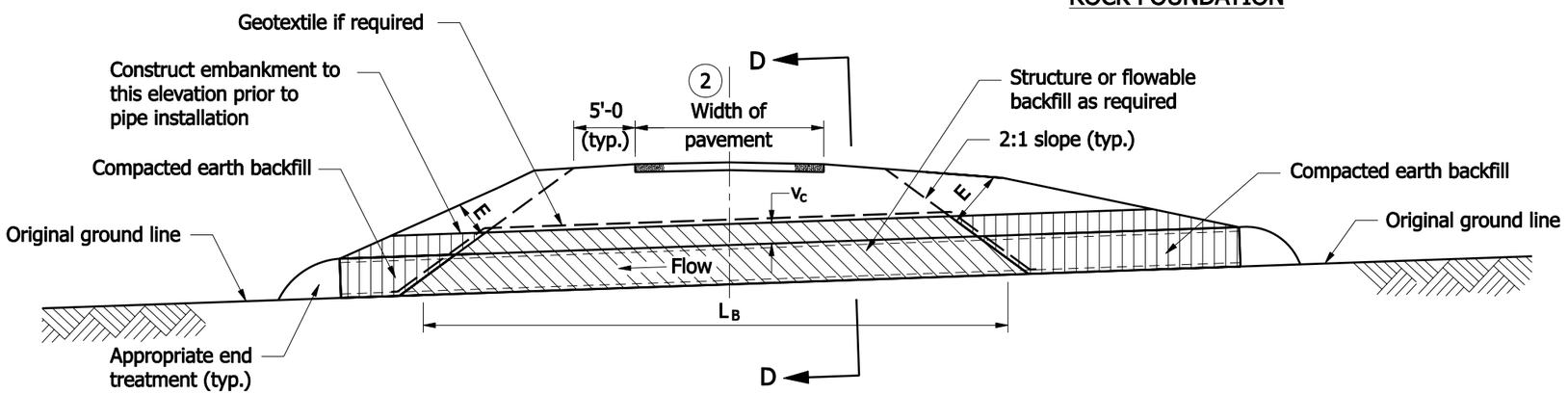

ELEVATION

NOTES :

1. Protective cover shall be constructed prior to running heavy equipment over installed pipes. The minimum covers are listed below:
   a.) 1.5' for $B_c \leq 18$"
   b.) 3' for 18" < $B_c \leq 54$"
   c.) 4' for $B_c > 54$"
2. For backfill purposes, paved shoulders, curbs, and sidewalks are considered pavement. See Standard Drawing E 715-BKFL-10 for pavement limits when curbs, paved shoulders, or sidewalks are present.
3. Flowable or structure backfill shall be encased by compacted earth backfill. The minimum encasement shall be 2 ft. If necessary, the 2:1 slope between the flowable or structure backfill and the encasement shall be modified to maintain the minimum 2 ft encasement.

INDIANA DEPARTMENT OF TRANSPORTATION

PIPE BACKFILL METHOD 2
NEW OR EXISTING DRIVE

SEPTEMBER 2008

STANDARD DRAWING NO. E 715-BKFL-07

RICHARD L. VanCLEAVE REGISTERED No. 9750 STATE OF INDIANA PROFESSIONAL ENGINEER

DESIGN STANDARDS ENGINEER

/s/ Richard L. VanCleave 09/02/08
DESIGN STANDARDS ENGINEER — DATE

/s/ Mark A. Miller 09/02/08
CHIEF HIGHWAY ENGINEER — DATE

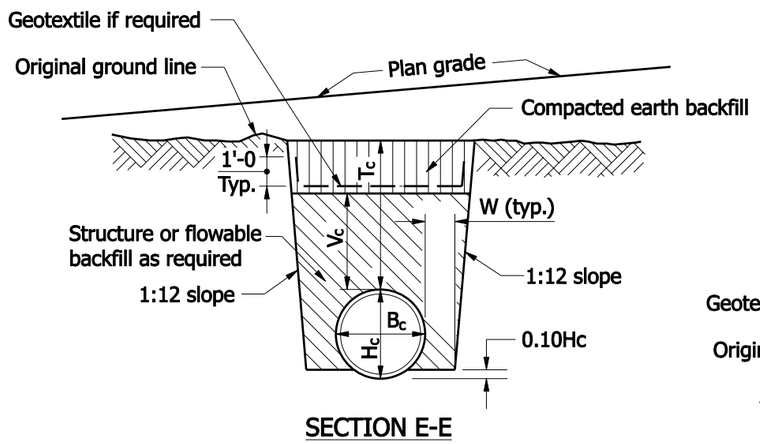

SECTION E-E

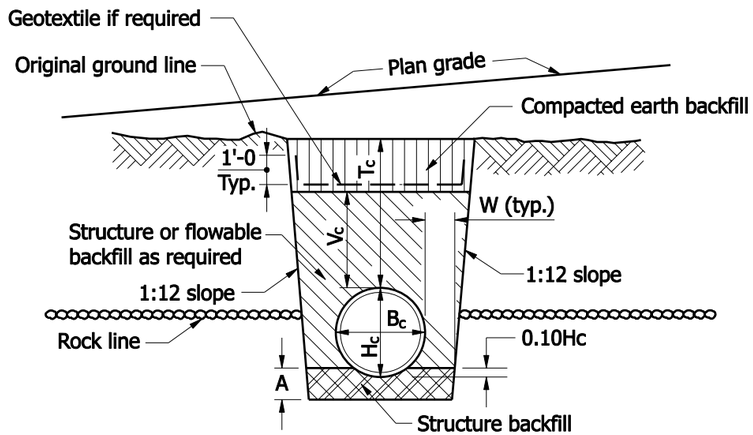

SECTION E-E
ROCK FOUNDATION

LEGEND

H_c = Overall diameter or rise (typ.)

B_c = Overall diameter or span

A = 8" min. for fill height less than 16'
= 12" min. for fill height of 16' or more

V_c = 12" for $B_c \leq 18"$
18" for $B_c > 18"$

T_c = Trench cover depth over pipe

W = 0.3 B_c or 9", whichever is greater

L_B = Backfill length measured from toe to toe of the 2:1 slopes.

NOTES :

1. Protective cover shall be constructed prior to running heavy equipment over installed pipes. The minimum covers are listed below:
   a.) 1.5' for $B_c \leq 18"$
   b.) 3' for $18" < B_c \leq 54"$
   c.) 4' for $B_c > 54"$

(2) For backfill purposes, paved shoulders, curbs, and sidewalks are considered pavement. See Standard Drawing E 715-BKFL-10 for pavement limits when curbs, paved shoulders, or sidewalks are present.

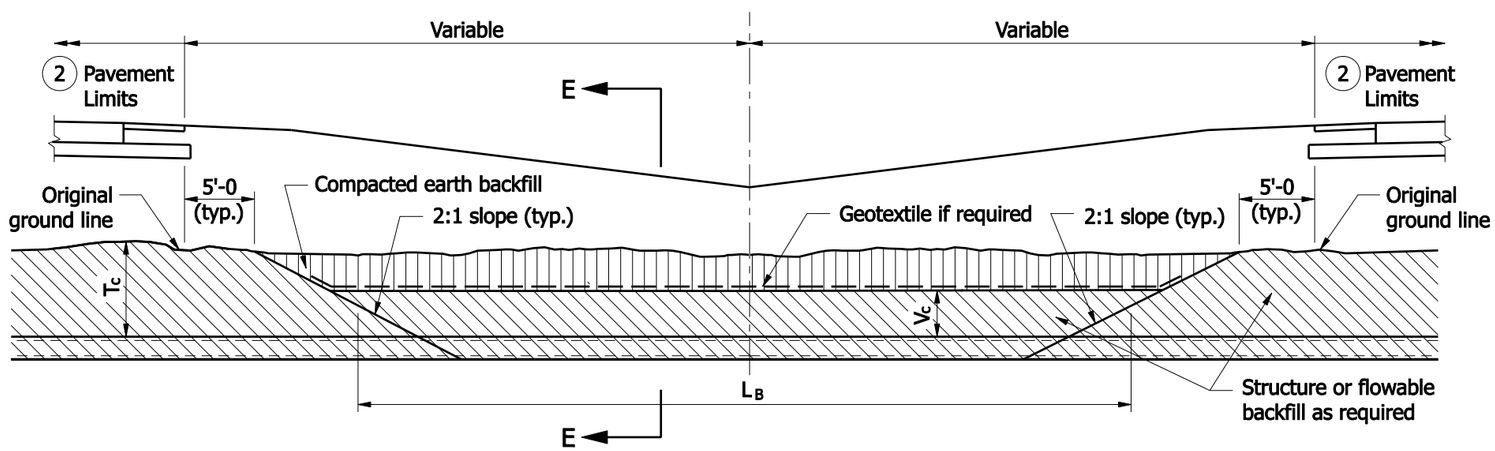

ELEVATION THRU MEDIAN STRIP

INDIANA DEPARTMENT OF TRANSPORTATION

PIPE BACKFILL METHOD 3
MEDIAN INSTALLATION, TRENCH

SEPTEMBER 2008

STANDARD DRAWING NO. E 715-BKFL-08

RICHARD L. VanCLEAVE
REGISTERED
No. 9750
STATE OF INDIANA
PROFESSIONAL ENGINEER

DESIGN STANDARDS ENGINEER

/s/ Richard L. VanCleave 09/02/08
DESIGN STANDARDS ENGINEER — DATE

/s/ Mark A. Miller 09/02/08
CHIEF HIGHWAY ENGINEER — DATE

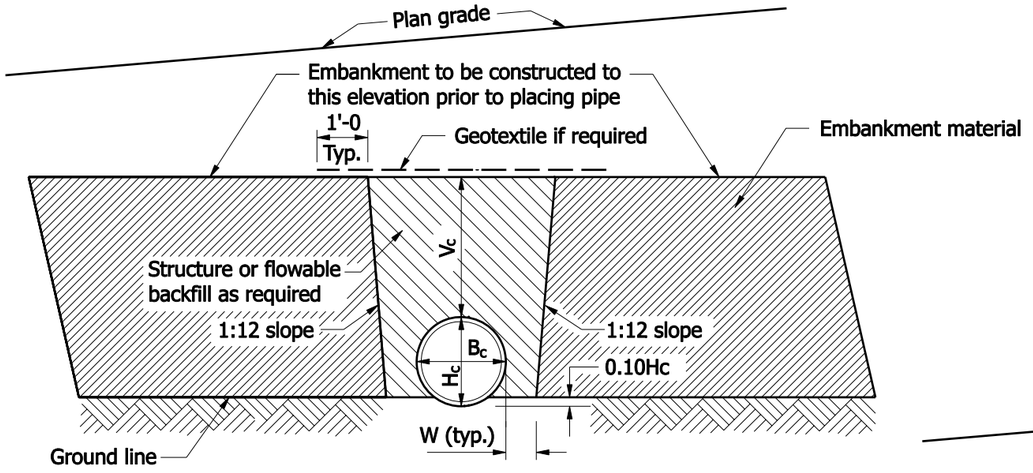

SECTION F-F

NOTES :

1. Protective cover shall be constructed prior to running heavy equipment over installed pipes. The minimum covers are listed below:
   a.) 1.5' for $B_c \leq 18"$
   b.) 3' for $18" < B_c \leq 54"$
   c.) 4' for $B_c > 54"$
2. For backfill purposes, paved shoulders, curbs, and sidewalks are considered pavement. See Standard Drawing E 715-BKFL-10 for pavement limits when curbs, paved shoulders, or sidewalks are present.

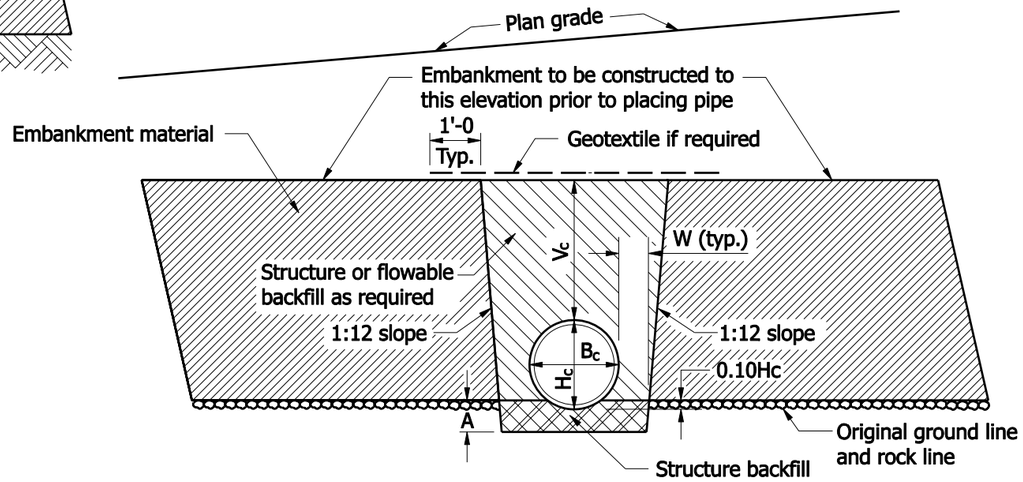

SECTION F-F
ROCK FOUNDATION

LEGEND

H_c = Overall diameter or rise (typ.)
B_c = Overall diameter or span
A = 8" min. for fill height less than 16'
= 12" min. for fill height of 16' or more
V_c = 12" for $B_c \leq 18"$
18" for $B_c > 18"$
W = 0.3 B_c or 9", whichever is greater
L_B = Backfill length measured from toe to toe of the 2:1 slopes.

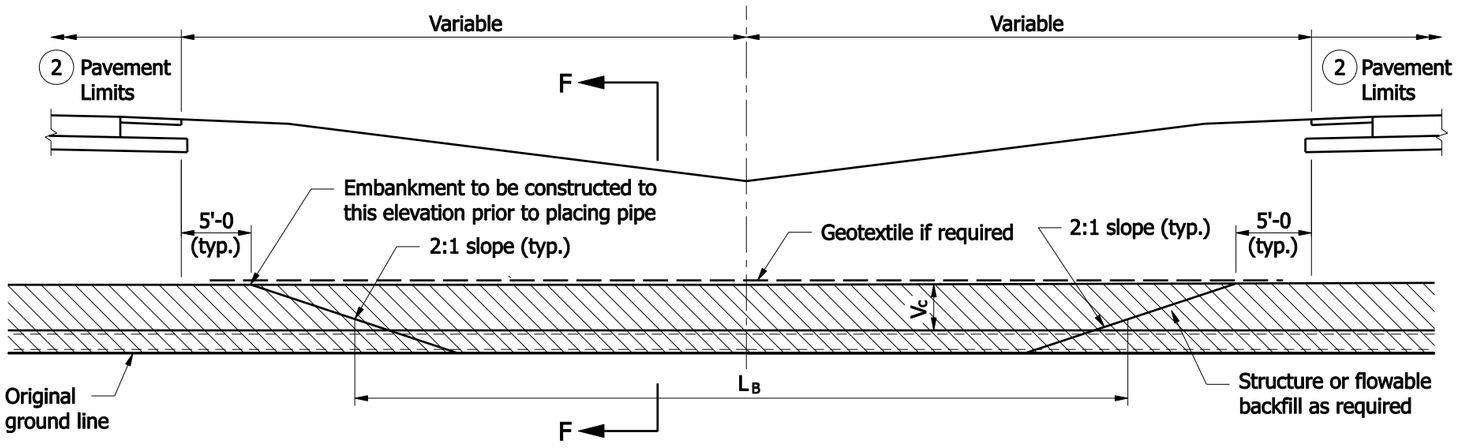

ELEVATION THRU MEDIAN STRIP

INDIANA DEPARTMENT OF TRANSPORTATION

PIPE BACKFILL METHOD 1
MEDIAN INSTALLATION, EMBANKMENT

SEPTEMBER 2008

STANDARD DRAWING NO. E 715-BKFL-09

RICHARD L. VanCLEAVE REGISTERED No. 9750 STATE OF INDIANA PROFESSIONAL ENGINEER

DESIGN STANDARDS ENGINEER

/s/ Richard L. Van Cleave 09/02/08
DESIGN STANDARDS ENGINEER — DATE

/s/ Mark A. Miller 09/02/08
CHIEF HIGHWAY ENGINEER — DATE

LEGEND

- (C) Curb
- (P) Pavement Limits *
- (S) Sidewalk
- (T) Travel Lane
- (U) Utility Strip
- (V) Paved Shoulder

* For backfill placement and computation

EDGE OF TRAVELWAY

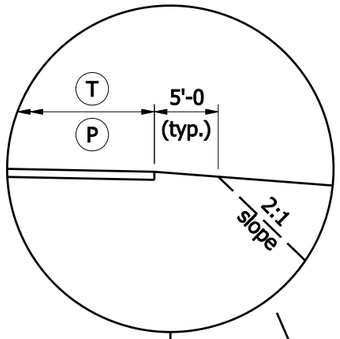

BACK OF CURB

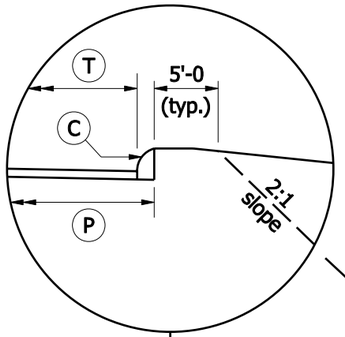

EDGE OF SIDWEWALK
ADJACENT TO CURB

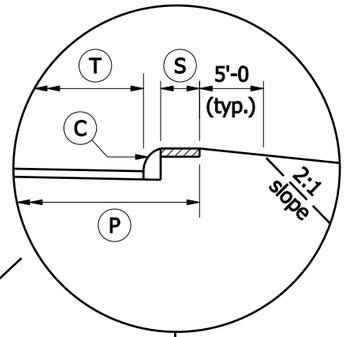

EDGE OF SIDEWALK
ADJACENT TO UTILITY
STRIP

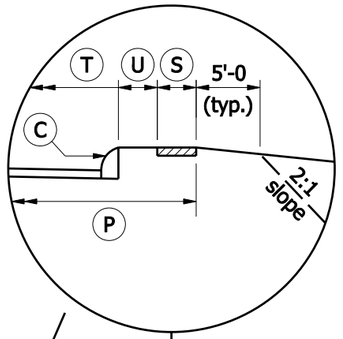

EDGE OF PAVED
SHOULDER

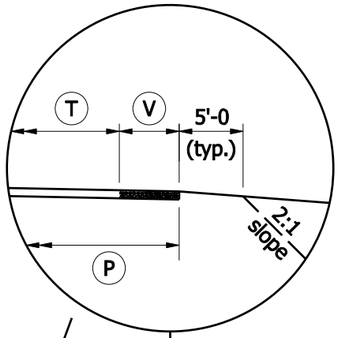

or

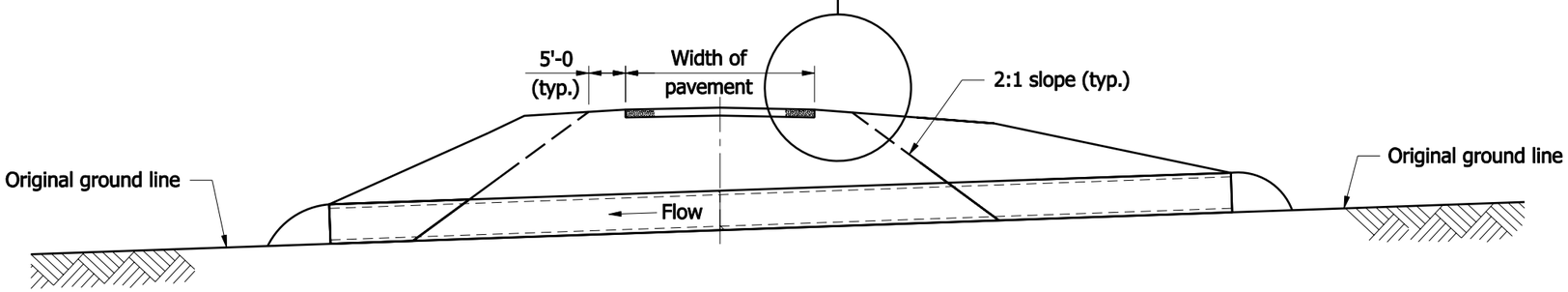

ELEVATION

INDIANA DEPARTMENT OF TRANSPORTATION	
PIPE BACKFILL LIMIT DETERMINATION	
SEPTEMBER 2007	
STANDARD DRAWING NO. E 715-BKFL-10	
RICHARD L. VanCLEAVE REGISTERED No. 9750 STATE OF INDIANA PROFESSIONAL ENGINEER DESIGN STANDARDS ENGINEER	*/s/ Richard L. VanCleave* 09/04/07 DESIGN STANDARDS ENGINEER DATE */s/ Mark A. Miller* 09/04/07 CHIEF HIGHWAY ENGINEER DATE

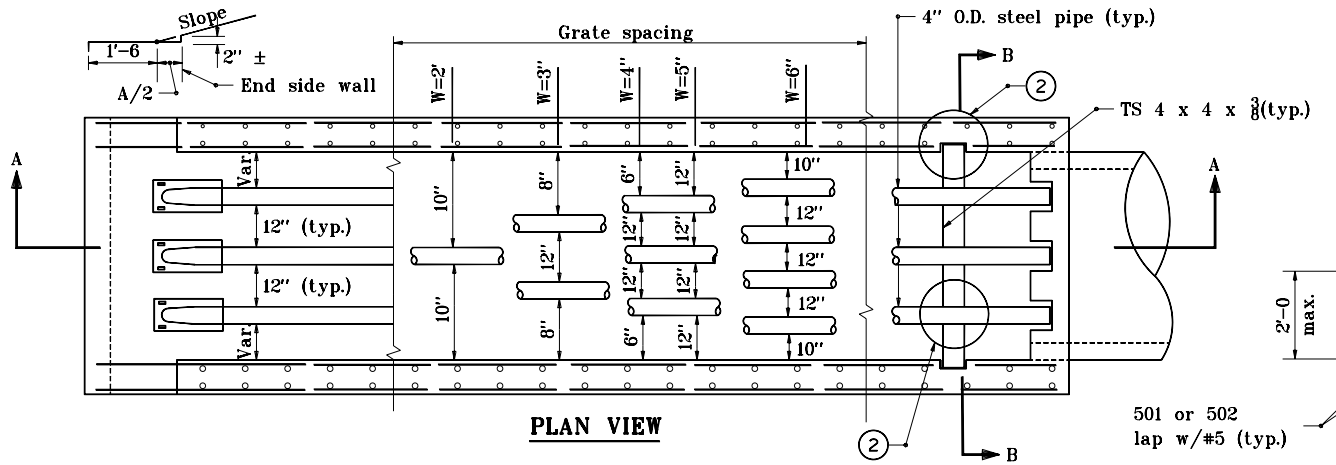

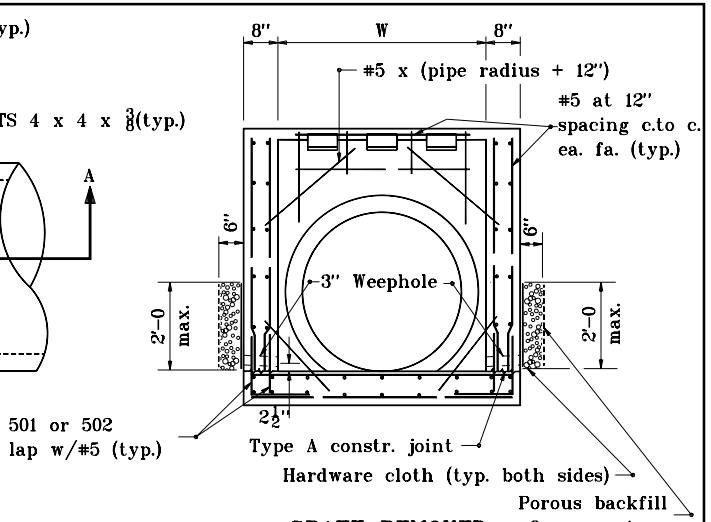

GRATE REMOVED
SECTION B-B

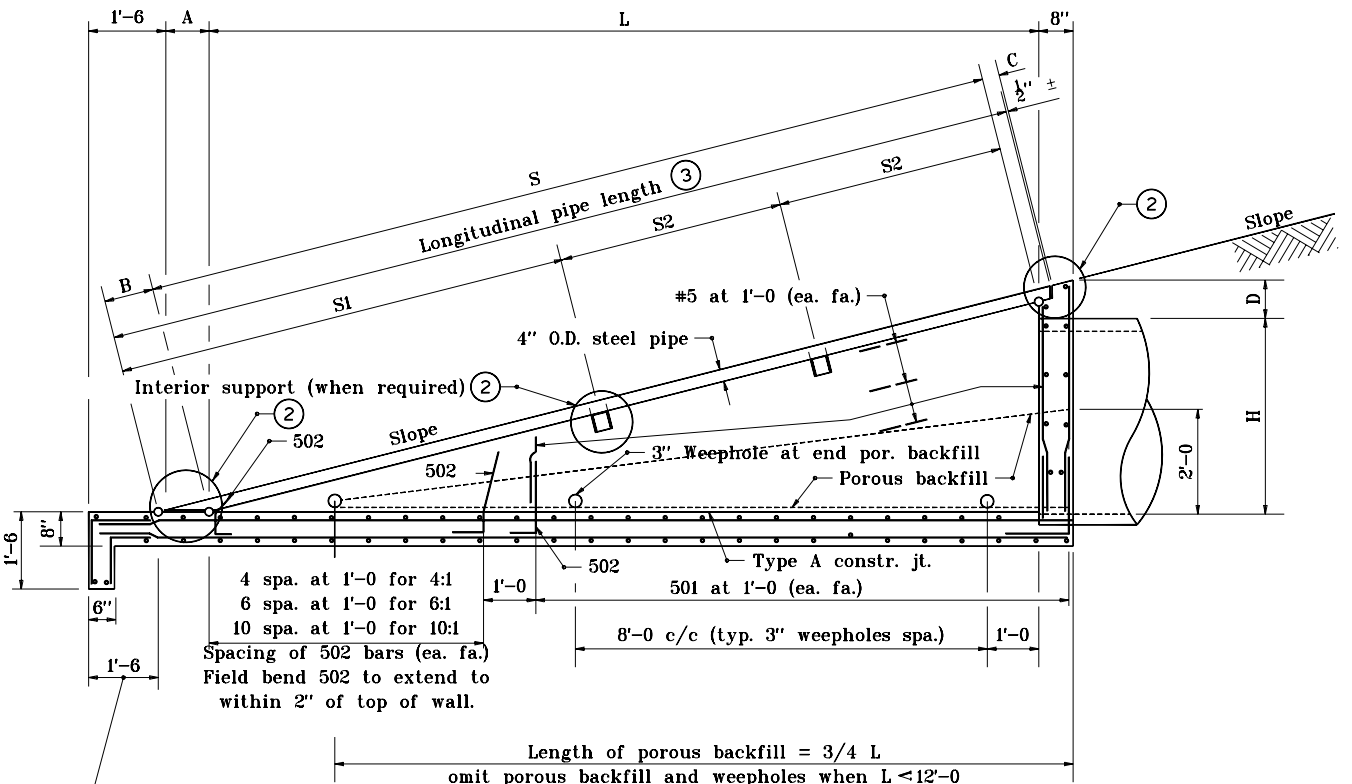

SECTION A-A

GENERAL NOTES

1. The invert grade of the grated box end section shall be the same as that of the pipe.
2. See Standard Drawing E 715-GBTO-04 for Details A, B, C, and D.
3. See Standard Drawings E 715-GBTO-05 through -08 for tables.
4. Type I grated box end section shall be used for mainline cross-culverts, outlet pipes within the clear zone.
5. See Standard Drawing E 715-GBTO-02 for bending diagrams.

INDIANA DEPARTMENT OF TRANSPORTATION

GRATED BOX END SECTION TYPE I

JANUARY 1999

STANDARD DRAWING NO. **E 715-GBTO-01**

ANTHONY L. URENOVICH REGISTERED No. 18095 STATE OF INDIANA PROFESSIONAL ENGINEER

DESIGN STANDARDS ENGINEER

DETAILS PLACED IN THIS FORMAT 11-15-99

/s/ Anthony L. Uremovich 11-15-99
DESIGN STANDARDS ENGINEER DATE

/s/ Firooz Zandi 11-15-99
CHIEF HIGHWAY ENGINEER DATE

ORIGINALLY APPROVED 1-04-99

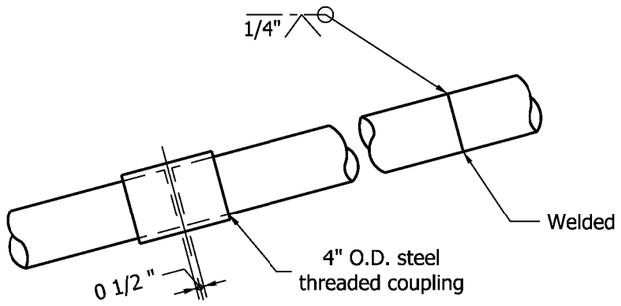

OPTIONAL COUPLING

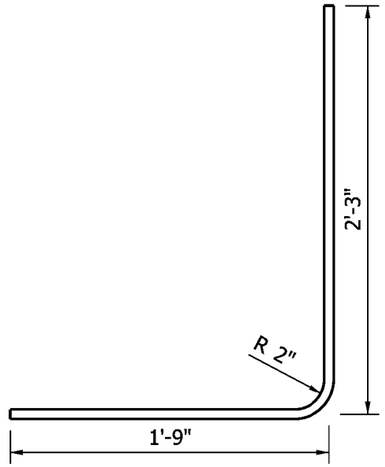

501 x 4'-0"

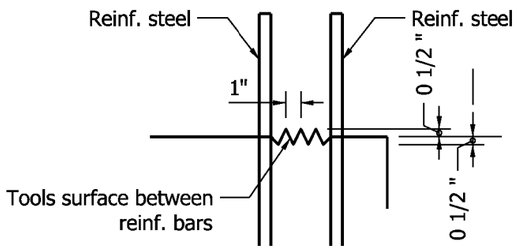

TYPE A CONSTRUCTION JOINT

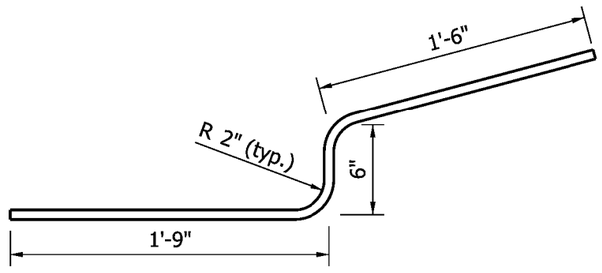

502 x 3'-9"

INDIANA DEPARTMENT OF TRANSPORTATION

GRATED BOX END SECTION
TYPE 1

SEPTEMBER 2009

STANDARD DRAWING NO. E 715-GBTO-02

RICHARD L. VanCLEAVE
REGISTERED
No. 9750
STATE OF INDIANA
PROFESSIONAL ENGINEER

DESIGN STANDARDS ENGINEER

/s/ Richard L. VanCleave 09/01/09
DESIGN STANDARDS ENGINEER DATE

/s/ Mark A. Miller 09/01/09
CHIEF HIGHWAY ENGINEER DATE

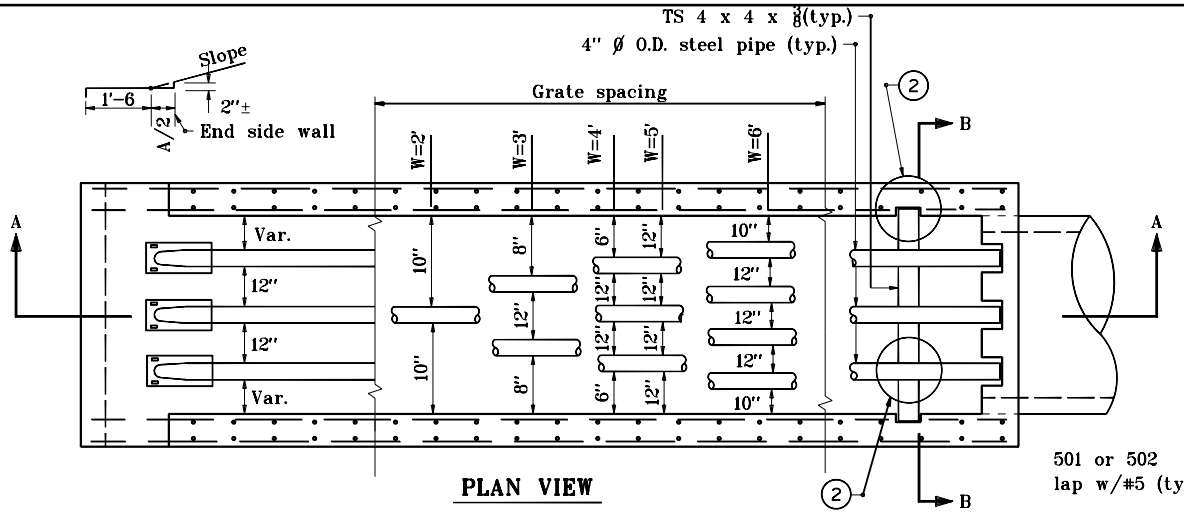

PLAN VIEW

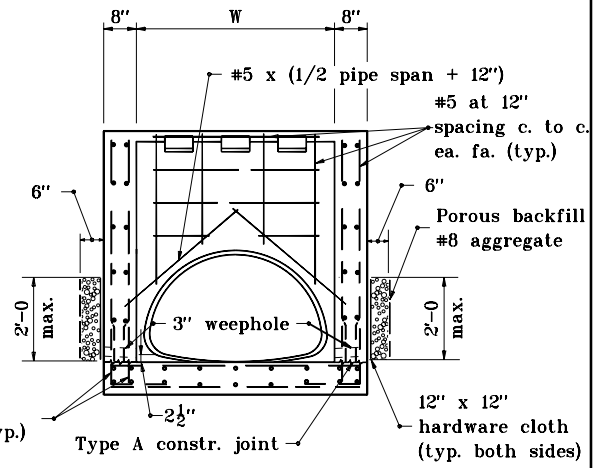

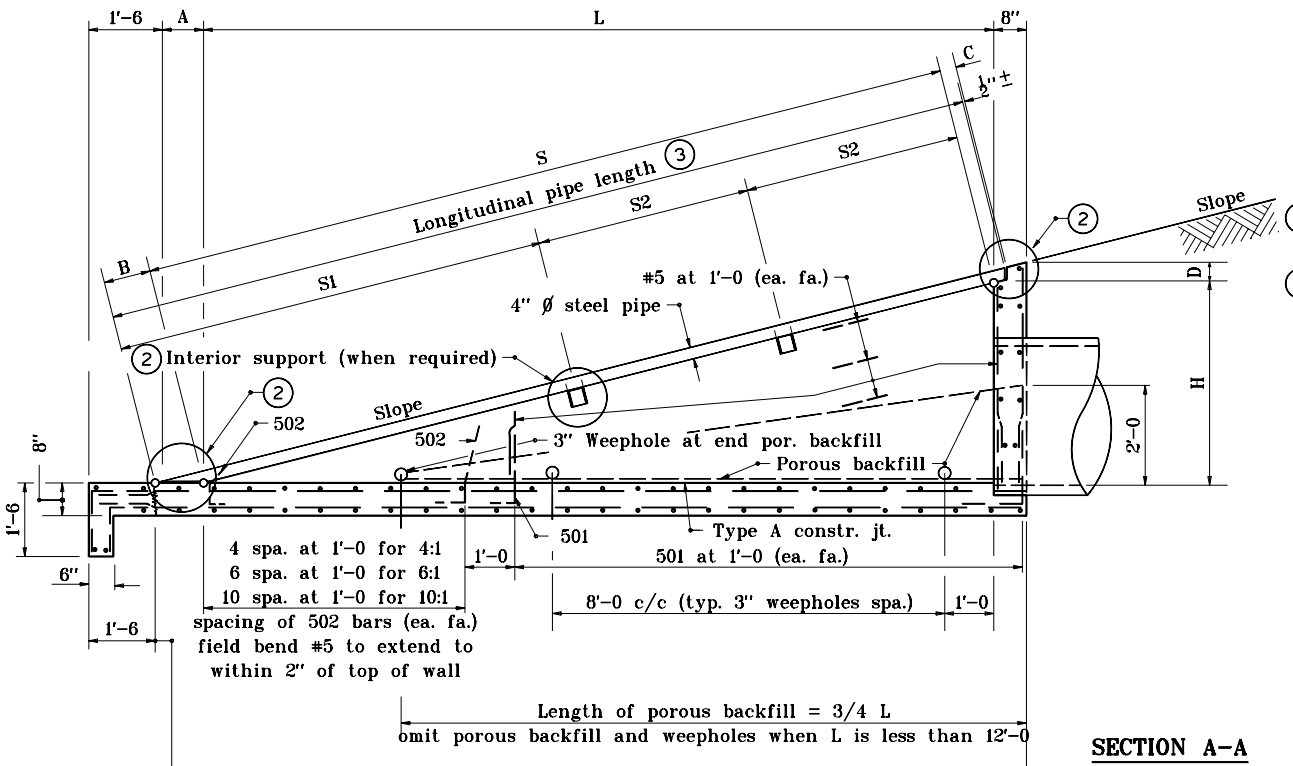

SECTION A-A

GRATE REMOVED
SECTION B-B

GENERAL NOTES

1. The invert grade of the grated box end section shall be the same as that of the pipe.
2. See Standard Drawing E 715-GBTO-04 for Details A, B, C, and D.
3. See Standard Drawings E 715-GBTO-05 through -08 for tables.
4. Type I grated box end sections shall be used for mainline cross-culverts' outlet pipes within the clear zone.
5. See Standard Drawing E 715-GBTO-02 for bending diagrams.

INDIANA DEPARTMENT OF TRANSPORTATION

GRATED BOX END SECTION TYPE I

JANUARY 1999

STANDARD DRAWING NO. E 715-GBTO-03

ANTHONY L. UREMOVICH REGISTERED No. 18095 STATE OF INDIANA PROFESSIONAL ENGINEER

DESIGN STANDARDS ENGINEER

DETAILS PLACED IN THIS FORMAT	11-15-99
/s/ Anthony L. Uremovich, DESIGN STANDARDS ENGINEER	11-15-99
/s/ Firooz Zandi, CHIEF HIGHWAY ENGINEER	11-15-99
ORIGINALLY APPROVED	1-04-99

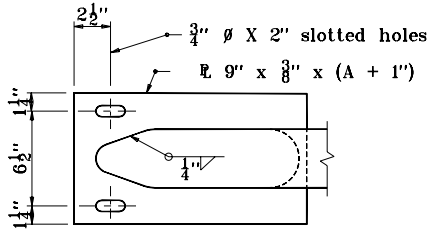

PLAN

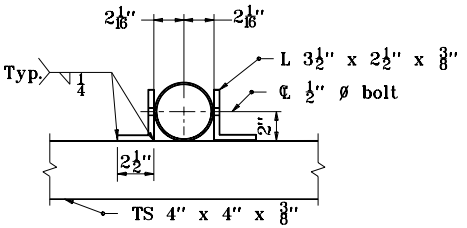

SECTION L–L

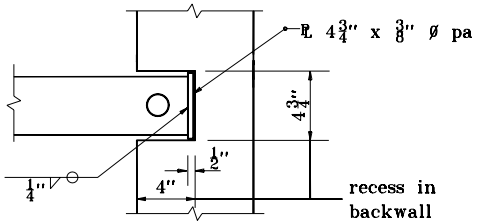

PLAN

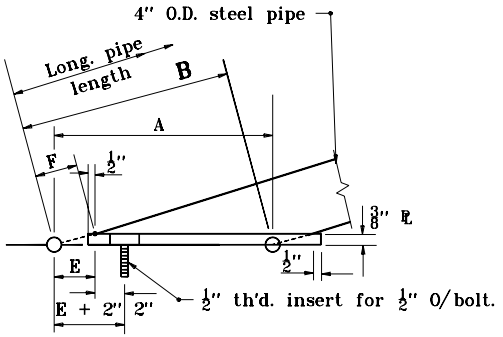

DETAIL A

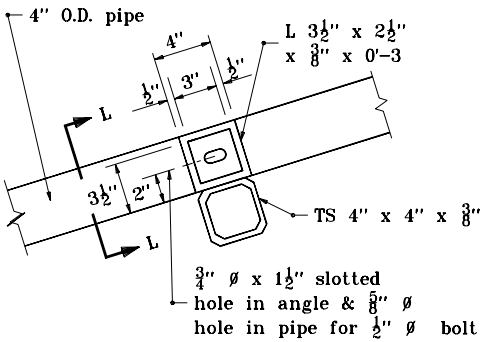

DETAIL B

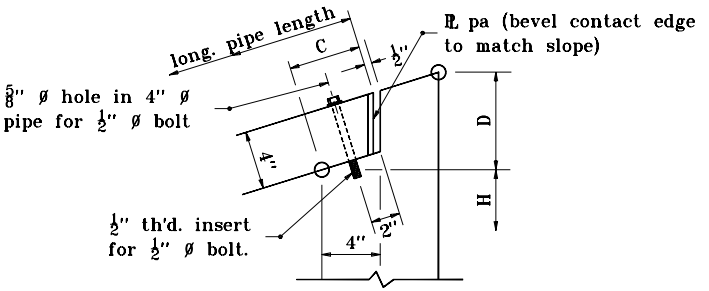

DETAIL C

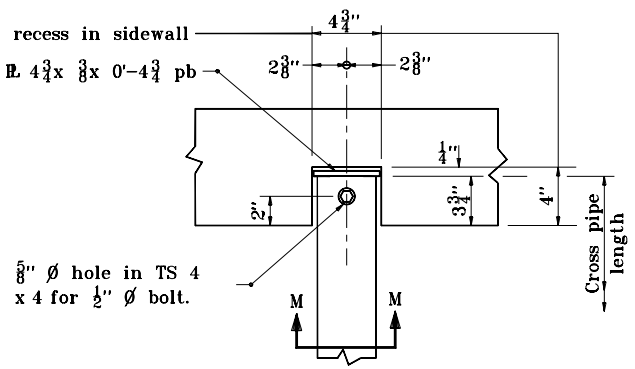

DETAIL D

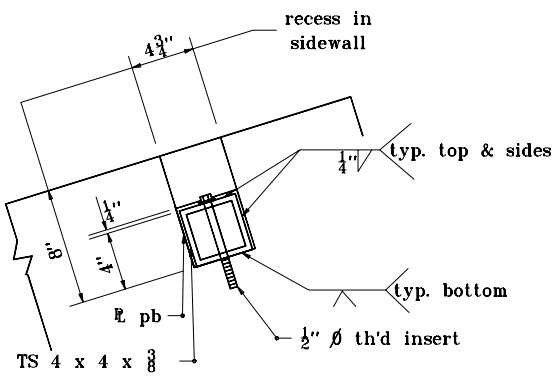

SECTION M–M

INDIANA DEPARTMENT OF TRANSPORTATION

GRATED BOX END SECTION TYPE I

JANUARY 1999

STANDARD DRAWING NO. E 715-GBTO-04

ANTHONY L. UREMOVICH REGISTERED No. 18095 STATE OF INDIANA PROFESSIONAL ENGINEER

DESIGN STANDARDS ENGINEER

DETAILS PLACED IN THIS FORMAT	11-15-99
/s/ Anthony L. Uremovich	11-15-99
DESIGN STANDARDS ENGINEER	DATE
/s/ Firooz Zandi	11-15-99
CHIEF HIGHWAY ENGINEER	DATE
ORIGINALLY APPROVED	1-04-99

2 : 1 SLOPE

CULVERT SIZE	H	L	W	Longitudinal Pipe			Cross Tube			
				S	No.	Length	No.	Length	S1	S2
12	2'–0"	4'–0"	2'–0"	4'–5 5/8"	1	5'–7 5/8"	–	–	5'–1 5/8"	–
15 & 18	2'–6"	5'–0"	2'–0"	5'–7"	1	6'–9"	1	2'–7 1/2"	4'–9 1/8"	1'–6"
21 & 24	3'–0"	6'–0"	3'–0"	6'–8 1/2"	2	7'–10 1/2"	–	–	7'–4 1/2"	–
27 & 30	3'–6"	7'–0"	3'–0"	7'–9 7/8"	2	10'–1 1/4"	–	–	8'–5 7/8"	–
33 & 36	4'–0"	8'–0"	4'–0"	8'–11 3/8"	3	10'–11 3/8"	–	–	9'–7 3/8"	–
42	4'–6"	9'–0"	4'–0"	10'–0 3/4"	3	11'–1 1/4"	–	–	10'–8 3/4"	–
48	5'–0"	10'–0"	5'–0"	11'–2 1/8"	3	12'–4 1/8"	–	–	11"–10 1/8"	–
54	5'–6"	11'–0"	6'–0"	12'–3 3/8"	4	13'–5 1/2"	1	6'–7 1/2"	9'–11 3/8"	3'–0"
60	6'–0"	12'–0"	6'–0"	13'–5"	4	14'–7"	1	6'–7 1/2"	11'–1"	3'–0"

3 : 1 SLOPE

CULVERT SIZE	H	L	W	Longitudinal Pipe			Cross Tube			
				S	No.	Length	No.	Length	S1	S2
12	2'–0"	6'–0"	2'–0"	6'–3 5/8"	1	7'–9"	1	2'–7 1/2"	5'–3 5/8"	2'–0"
15 & 18	2'–6"	7'–6"	2'–0"	7'–10 5/8"	1	9'–3 5/8"	1	2'–7 1/2"	5'–4 5/8"	3'–6"
21 & 24	3'–0"	9'–0"	3'–0"	9'–5 5/8"	2	10'–10 5/8"	1	3'–7 1/2"	6'–11 5/8"	3'–6"
27 & 30	3'–6"	10'–6"	3'–0"	11'–0 3/4"	2	12'–5 1/8"	1	3'–7 1/2"	8'–6 3/4"	3'–6"
33 & 36	4'–0"	12'–0"	4'–0"	12'–7 1/2"	3	14'–0 5/8"	1	4'–7 1/2"	10'–1 1/4"	3'–6"
42	4'–6"	13'–6"	4'–0"	14'–2 3/4"	3	15'–7 3/4"	1	4'–7 1/2"	10'–8 3/4"	4'–6"
48	5'–0"	15'–0"	5'–0"	15'–9 1/2"	3	17'–2 5/8"	1	5'–7 1/2"	12'–3 1/2"	4'–6"
54	5'–6"	16'–6"	6'–0"	17'–4 3/4"	4	18'–9 1/4"	1	6'–7 1/2"	10'–4 3/4"	8'–0"
60	6'–0"	18'–0"	6'–0"	18'–11 3/4"	4	20'–4 1/4"	1	6'–7 1/2"	11'–11 3/4"	8'–0"

4 : 1 SLOPE

CULVERT SIZE	H	L	W	Longitudinal Pipe			Cross Tube			
				S	No.	Length	No.	Length	S1	S2
12	2'–0"	8'–0"	2'–0"	8'–3"	1	9'–11 1/2"	1	2'–7 1/2"	5'–7"	4'–0"
15 &18	2'–6"	10'–0"	2'–0"	10'–3 1/2"	1	12'–0 1/2"	2	2'–7 1/2"	5'–7 1/2"	3'–0"
21 & 24	3'–0"	12'–0"	3'–0"	12'–4 3/8"	2	14'–1"	1	3'–7 1/2"	9'–2 1/2"	4'–6"
27 & 30	3'–6"	14'–0"	3'–0"	14'–5 1/4"	2	16'–1 5/8"	1	3'–7 1/2"	9'–3 1/8"	6'–6"
33 & 36	4'–0"	16'–0"	4'–0"	16'–5 5/8"	3	18'–2 1/2"	1	4'–7 1/2"	11'–3 5/8"	6'–6"
42	4'–6"	18'–0"	4'–0"	18'–6 3/8"	3	20'–3 1/4"	1	4'–7 1/2"	12'–4 3/8"	7'–6"
48	5'–0"	20'–0"	5'–0"	20'–7 3/8"	3	22'–4"	1	5'–7 1/2"	11'–5 3/8"	10'–6"
54	5'–6"	22'–0"	6'–0"	22'–8 1/8"	4	24'–4 3/4"		6'–7 1/2"	12'–6 1/8"	11'–6"
60	6'–0"	24'–0"	6'–0"	24'–8 7/8"	4	26'–5 1/2"	2	6'–7 1/2"	12'–6 7/8"	6'–9"

5 : 1 SLOPE

CULVERT SIZE	H	L	W	Longitudinal Pipe			Cross Tube			
				S	No.	Length	No.	Length	S1	S2
12	2'–0"	10'–0"	2'–0"	10'–2 3/8"	1	12–2 3/4"	2	2'–7 1/2"	6'–2 3/8"	2'–10"
15 & 18	2'–6"	12'–6"	2'–0"	12'–9"	1	14'–9 3/8"	2	2'–7 1/2"	5'–11"	4'–3"
21 & 24	3'–0"	15'–0"	3'–0"	15'–3 1/2"	2	17'–4"	1	3'–7 1/2"	9'–2 1/2"	7'–9"
27 & 30	3'–6"	17'–6"	3'–0"	17'–10 1/2"	2	19'–10 1/2"	2	3'–7 1/2"	9'–6 1/8"	5'–0"
33 & 36	4'–0"	20'–0"	4'–0"	20'–4 1/2"	3	22'–5 1/4"	1	4'–7 1/2"	13'–0 3/4"	9'–0"
42	4'–6"	22'–6"	4'–0"	22'–11 3/8"	3	24'–11 1/4"	1	4'–7 1/2"	13'–1 3/8"	11'–6"
48	5'–0"	25'–0"	5'–0"	25'–6"	3	27'–6 1/4"	2	5'–7 1/2"	13'–2"	7'–0"
54	5'–6"	27'–6"	6'–0"	28'–0 1/2"	4	30'–0 5/8"	2	6'–7 1/2"	13'–2 1/2"	8'–3"
60	6'–0"	30'–0"	6'–0"	30'–7 1/8"	4	32'–7 1/2"	2	6'–7 1/2"	11'–9 1/8"	10'–3"

6 : 1 SLOPE

CULVERT SIZE	H	L	W	Longitudinal Pipe			Cross Tube			
				S	No.	Length	No.	Length	S1	S2
12	2'–0"	12'–0"	2'–0"	12'–2"	1	14'–6 1/4"	2	2'–7 1/2"	6'–2"	4'–0"
15 & 18	2'–6"	15'–0"	2'–0"	15'–2 1/2"	1	17'–6 1/2"	2	2'–7 1/2"	6'–8 1/2"	5'–3"
21 & 24	3'–0"	18'–0"	3'–0"	18'–3"	2	20'–7 1/4"	2	3'–7 1/2"	9'–9"	5'–3"
27 & 30	3'–6"	21'–0"	3'–0"	21'–3 1/2"	2	23'–7 3/4"	2	3'–7 1/2"	9'–9 1/2"	6'–9"
33 & 36	4'–0"	24'–0"	4'–0"	24'–4"	3	26'–8 1/4"	2	4'–7 1/2"	13'–4"	6'–6"
42	4'–6"	27'–0"	4'–0"	27'–4 1/2"	3	29'–8 3/4"	2	4'–7 1/2"	13'–4 1/2"	8'–0"
48	5'–0"	30'–0"	5'–0"	30'–5"	3	32'–9 1/4"	2	5'–7 1/2"	13'–5"	9'–6"
54	5'–6"	33'–0"	6'–0"	33'–5 1/2"	4	35'–9 3/4"	2	6'–7 1/2"	12'–11 1/2"	11'–3"
60	6'–0"	36'–0"	6'–0"	36'–6"	4	38'–10 1/8"	3	6'–7 1/2"	13'–0"	8'–6"

APPROXIMATE QUANTITIES

PIPE DIAMETER	2 : 1 SLOPE				3 : 1 SLOPE				4 : 1 SLOPE				5 : 1 SLOPE				6 : 1 SLOPE			
	Concrete, Cu. Yds.		Reinf. Steel, lb.	Str. Steel, lb.	Concrete, Cu. Yds.		Reinf. Steel, lb.	Str. Steel, lb.	Concrete, Cu. Yds.		Reinf. Steel, lb.	Str. Steel, lb.	Concrete, Cu. Yds.		Reinf. Steel, lb.	Str. Steel, lb.	Concrete, Cu. Yds.		Reinf. Steel, lb.	Str. Steel, lb.
	Conc. Pipe	C.M. Pipe			Conc. Pipe	C.M. Pipe			Conc. Pipe	C.M. Pipe			Conc. Pipe	C.M. Pipe			Conc. Pipe	C.M. Pipe		
12	1.1	1.1	290	80	1.4	1.4	375	160	1.7	1.7	465	195	2.1	2.1	555	275	2.4	2.4	645	305
15 & 18	1.3	1.3	345	145	1.8	1.8	460	180	2.2	2.2	575	270	2.8	2.8	690	305	3.0	3.0	805	345
21 & 24	1.9	1.9	460	215	2.5	2.5	620	370	3.1	3.1	775	460	3.7	3.8	935	545	4.3	4.4	1090	705
27 & 30	2.1	2.2	525	245	2.9	3.0	715	410	3.6	3.7	905	510	4.4	4.5	1095	680	5.2	5.3	1285	780
33 & 36	2.8	2.9	670	410	3.8	3.9	910	660	4.8	4.9	1150	825	5.9	6.0	1395	995	6.9	7.0	1640	1255
42	3.2	3.3	745	450	4.4	4.5	1025	720	5.6	5.7	1305	905	6.8	8.9	1585	1090	8.0	8.1	1870	1370
48	4.0	4.1	1.1	910	5.5	5.6	1250	80	8.5	8.7	1940	1310	10.1	10.2	1940	1310	10.1	10.2	2285	1515
54	4.9	5.1	1090	845	6.8	6.9	1500	1125	8.6	8.8	1915	1415	10.5	10.7	2330	1845	12.4	12.6	2745	2145
60	5.4	5.8	1180	900	7.8	7.7	1640	1205	9.8	9.8	2105	1850	11.7	11.9	2570	1970	13.8	14.0	3035	2425

INDIANA DEPARTMENT OF TRANSPORTATION

GRATED BOX END SECTION TYPE I DIMENSIONS AND QUANTITIES

JANUARY 1999

STANDARD DRAWING NO. E 715–GBTO–05

ANTHONY L. UREMOVICH REGISTERED No. 18095 STATE OF INDIANA PROFESSIONAL ENGINEER

DESIGN STANDARDS ENGINEER

DETAILS PLACED IN THIS FORMAT 11-15-99

/s/ Anthony L. Uremovich 11-15-99
DESIGN STANDARDS ENGINEER — DATE

/s/ Firooz Zandi 11-15-99
CHIEF HIGHWAY ENGINEER — DATE

ORIGNALLY APPROVED 1-04-99

2:1 SLOPE

Pipe Size	H	L	W	Longitudinal Pipe			Cross Tube			
				S	No.	Length	No.	Length	S 1	S 2
17 x 13	1'–9"	3'–6"	2'–0"	3'–11"	1	5'–0 7/8"	–	–	4'–7"	–
21 x 15	1'–11"	3'–10"	2'–0"	4'–3 1/2"	1	5'–5 3/8"	–	–	4'–11 3/8"	–
24 x 18	2'–2"	4'–4"	3'–0"	4'–10 1/8"	2	6'–0 1/8"	–	–	5'–6 1/8"	–
28 x 20	2'–4"	4'–8"	3'–0"	5'–2 1/2"	2	6'–4 3/8"	–	–	5'–10 3/8"	–
35 x 24	2'–8"	5'–4"	4'–0"	5'–11 1/2"	3	7'–1 1/2"	–	–	6'–7 1/2"	–
42 x 29	3'–1"	6'–2"	4'–0"	6'–10 3/4"	3	8'–0 3/4"	–	–	7'–6 3/4"	–
49 x 33	3'–5"	6'–10"	5'–0"	7'–7 5/8"	3	8'–9 5/8"	–	–	8'–3 5/8"	–
57 x 38	3'–10"	7'–8"	5'–0"	8'–6 7/8"	3	9'–8 7/8"	–	–	9'–2 7/8"	–
64 x 43	4'–3"	8'–6"	6'–0"	9'–6"	4	10'–8"	–	–	10'–2"	–
71 x 47	4'–7"	9'–2"	6'–0"	10–3"	4	11'–5"	–	–	10'–11"	–

3:1 SLOPE

Pipe Size	H	L	W	Longitudinal Pipe			Cross Tube			
				S	No.	Length	No.	Length	S 1	S 2
17 x 13	1'–9"	5'–3"	2'–0"	5'–6 3/8"	1	6'–11 1/2"	1	2'–7 1/2"	5'–0 3/8"	1'–6"
21 x 15	1'–11"	5'–9"	2'–0"	6'–0 3/4"	1	7'–5 3/4"	1	2'–7 1/2"	5'–0 3/4"	2'–0"
24 x 18	2'–2"	6'–6"	3'–0"	6'–10 1/4"	2	8'–3 1/4"	–	–	7'–10 1/4"	–
28 x 20	2'–4"	7'–0"	3'–0"	7'–4 1/2"	2	8'–9 5/8"	–	–	8'–4 1/2"	–
35 x 24	2'–8"	8'–0"	4'–0"	8'–5 1/4"	3	9'–10 1/4"	–	–	9'–5 1/4"	–
42 x 29	3'–1"	9'–3"	4'–0"	9'–9"	3	11'–2"	–	–	10'–9"	–
49 x 33	3'–5"	10'–3"	5'–0"	10'–9 5/8"	3	12'–2 3/4"	–	–	11'–9 5/8"	–
57 x 38	3'–10"	11'–6"	5'–0"	12'–1 1/2"	3	13'–6 1/2"	1	5'–7 1/2"	10'–1 1/2"	3'–0"
64 x 43	4'–3"	12'–9"	6'–0"	13'–5 1/4"	4	14'–10 3/8"	1	6'–7 1/2"	11'–5 1/4"	3'–0"
71 x 47	4'–7"	13'–9"	6'–0"	14'–5 7/8"	4	15'–11"	1	6'–7 1/2"	12'–5 7/8"	3'–0"

4:1 SLOPE

Pipe Size	H	L	W	Longitudinal Pipe			Cross Tube			
				S	No.	Length	No.	Length	S 1	S 2
17 x 13	1'–9"	7'–0"	2'–0"	7'–2 5/8"	1	8'–11 1/4"	1	2'–7 1/2"	5'–9 5/8"	2'–9"
21 x 15	1'–11"	7'–8"	2'–0"	7'–10 7/8"	1	9'–7 1/2"	1	2'–7 1/2"	5'–8 7/8"	3'–6"
24 x 18	2'–2"	8'–8"	3'–0"	8'–11 1/4"	2	10'–7 7/8"	1	3'–7 1/2"	8'–3 1/4"	2'–0"
28 x 20	2'–4"	9'–4"	3'–0"	9'–7 1/2"	2	11'–4"	1	3'–7 1/2"	8'–11 1/2"	2'–0"
35 x 24	2'–8"	10'–8"	4'–0"	11'–0"	3	12'–8 1/2"	–	–	12'–4"	–
42 x 29	3'–1"	12'–4"	4'–0"	12'–8 1/2"	3	14'–5 3/8"	1	4'–7 1/2"	11'–0 1/2"	3'–0"
49 x 33	3'–5"	13'–8"	5'–0"	14'–1"	3	15'–9 5/8"	1	5'–7 1/2"	12'–5"	3'–0"
57 x 38	3'–10"	15'–4"	5'–0"	15'–9 5/8"	3	17'–6 1/4"	1	5'–7 1/2"	12'–7 5/8"	4'–6"
64 x 43	4'–3"	17'–0"	6'–0"	17'–6 1/4"	4	19'–2 7/8"	1	6'–7 1/2"	12'–4 1/4"	6'–6"
71 x 47	4'–7"	18'–4"	6'–0"	18'–10 3/4"	4	20'–7 7/8"	1	6'–7 1/2"	12'–8 3/4"	7'–6"

INDIANA DEPARTMENT OF TRANSPORTATION

GRATED BOX END SECTION TYPE I DIMENSIONS

JANUARY 1999

STANDARD DRAWING NO. E 715-GBTO-06

ANTHONY L. UREMOVICH REGISTERED No. 18095 STATE OF INDIANA PROFESSIONAL ENGINEER

DESIGN STANDARDS ENGINEER

DETAILS PLACED IN THIS FORMAT 11-15-99

/s/ Anthony L. Uremovich 11-15-99
DESIGN STANDARDS ENGINEER DATE

/s/ Firooz Zandi 11-15-99
CHIEF HIGHWAY ENGINEER DATE

ORIGINALLY APPROVED 1-04-99

5:1 SLOPE										
Pipe Size	H	L	W	Longitudinal Pipe			Cross Tube			
				S	No.	Length	No.	Length	S 1	S 2
17 x 13	1'–9"	8'–9"	2'–0"	8'–11 1/8"	1	10'–11 1/2"	1	2'–7 1/2"	6'–1 1/8"	4'–6"
21 x 15	1'–11"	9'–7"	2'–0"	9'–9 1/4"	1	11'–9 3/8"	1	2'–7 1/2"	6'–8 1/4"	4'–9"
24 x 18	2'–2"	10'–10"	3'–0"	11–0 5/8"	2	13'–1"	1	3'–7 1/2"	8'–8 3/8"	4'–0"
28 x 20	2'–4"	11'–6"	3'–0"	11–0 3/4"	2	13'–11 1/8"	1	3'–7 1/2"	9'–6 3/4"	4'–0"
35 x 24	2'–8"	13'–4"	4'–0"	13'–7 1/8"	3	15'–7 1/2"	1	4'–7 1/2"	12'–3 5/8"	3'–0"
42 x 29	3'–1"	15'–5"	4'–0"	15'–8 3/8"	3	17'–9"	1	4'–7 1/2"	12'–10 5/8"	4'–6"
49 x 33	3'–5"	17'–1"	5'–0"	17'–5"	3	19'–5 1/2"	1	5'–7 1/2"	13'–1"	6'–0"
57 x 38	3'–10"	19'–2"	5'–0"	19'–6 1/2"	3	21'–6 7/8"	1	5'–7 1/2"	13'–2 1/2"	8'–0"
64 x 43	4'–3"	21'–3"	6'–0"	21'–8"	4	23'–8 3/8"	1	6'–7 1/2"	12'–10"	10'–6"
71 x 47	4'–7"	22'–11"	6'–0"	23'–4 3/8"	4	25'–4 3/4"	1	6'–7 1/2"	13'–6 3/8"	11'–6"

6:1 SLOPE										
Pipe Size	H	L	W	Longitudinal Pipe			Cross Tube			
				S	No.	Length	No.	Length	S 1	S 2
17 x 13	1'–9"	10'–6"	2'–0"	10'–7 3/4"	1	13'–0"	2	2'–7 1/2"	6'–7 3/4"	3'–0"
21 x 15	1'–11"	11'–6"	2'–0"	11'–7 7/8"	1	14'–0 1/8"	2	2'–7 1/2"	6'–1 1/8"	3'–9"
24 x 18	2'–2"	13'–0"	3'–0"	13'–2 1/8"	2	15'–6 3/8"	1	3'–7 1/2"	9'–8 1/8"	5'–6"
28 x 20	2'–4"	14'–0"	3'–0"	14'–2 1/4"	2	16'–6 1/2"	1	3'–7 1/2"	9'–8 1/4"	6'–6"
35 x 24	2'–5"	16'–0"	4'–0"	16'–2 5/8"	3	18'–6 7/8"	1	4'–7 1/2"	13'–2 5/8"	5'–0"
42 x 29	3'–1"	18'–6"	4'–0"	18'–9"	3	21'–1 1/4"	1	4'–7 1/2"	13'–6"	7'–3"
49 x 33	3'–5"	20'–6"	5'–0"	20'–9 3/8"	3	23'–1 5/8"	1	5'–7 1/2"	13'–3 3/8"	9'–6"
57 x 38	3'–10"	23'–0"	5'–0"	23'–3 3/4"	3	25'–8"	1	5'–7 1/2"	13'–9 1/4"	11'–6"
64 x 43	4'–3"	25'–6"	6'–0"	25'–10 1/4"	4	28'–2 1/2"	2	6'–7 1/2"	13'–4 1/4"	7'–3"
71 x 47	4'–7"	27'–6"	6'–0"	27'–10 1/2"	4	30'–2 3/4"	2	6'–7 1/2"	13'–4 1/2"	8'–3"

INDIANA DEPARTMENT OF TRANSPORTATION

GRATED BOX END SECTION TYPE I DIMENSIONS

JANUARY 1999

STANDARD DRAWING NO. E 715-GBTO-07

ANTHONY L. UREMOVICH REGISTERED No. 18095 STATE OF INDIANA PROFESSIONAL ENGINEER

DESIGN STANDARDS ENGINEER

DETAILS PLACED IN THIS FORMAT 11-15-99

/s/ Anthony L. Uremovich 11-15-99
DESIGN STANDARDS ENGINEER DATE

/s/ Firooz Zandi 11-15-99
CHIEF HIGHWAY ENGINEER DATE

ORIGINALLY APPROVED 1-04-99

APPROXIMATE QUANTITIES

PIPE SIZE	2:1 SLOPE				3:1 SLOPE				4:1 SLOPE				5:1 SLOPE				6:1 SLOPE			
	Concrete, Cu. Yds.		Reinf. Steel, lb.	Str. Steel, lb.	Concrete, Cu. Yds.		Reinf. Steel, lb.	Str. Steel, lb.	Concrete, Cu. Yds.		Reinf. Steel, lb.	Str. Steel, lb.	Concrete, Cu. Yds.		Reinf. Steel, lb.	Str. Steel, lb.	Concrete, Cu. Yds.		Reinf. Steel, lb.	Str. Steel, lb.
	Conc. Pipe	C.M. Pipe			Conc. Pipe	C.M. Pipe			Conc. Pipe	C.M. Pipe			Conc. Pipe	C.M. Pipe			Conc. Pipe	C.M. Pipe		
17 x 13	–	1.0	260	75	–	1.2	335	150	–	1.5	415	180	–	1.8	490	210	–	2.1	565	290
21 x 15	–	1.1	280	80	–	1.3	360	160	–	1.6	445	190	–	1.9	530	220	–	2.3	615	300
24 x 18	–	1.4	360	170	–	1.8	465	235	–	2.2	570	370	–	2.6	680	440	–	3.1	790	505
28 x 20	–	1.5	375	180	–	1.9	495	245	–	2.4	610	390	–	2.8	730	460	–	3.3	845	530
35 x 24	–	2.0	475	300	–	2.6	625	410	–	3.2	775	525	–	3.8	925	740	–	4.4	1075	860
42 x 29	–	2.2	535	335	–	2.9	710	460	–	3.6	885	685	–	4.4	1060	820	–	5.1	1240	955
49 x 33	–	2.8	645	360	–	3.7	860	500	–	4.6	1075	750	–	5.5	1290	900	–	6.4	1505	1045
57 x 38	–	3.0	710	395	–	4.1	955	655	–	5.2	1205	815	–	6.2	1450	980	–	7.3	1700	1140
64 x 43	–	3.8	855	575	–	5.1	1155	925	–	6.4	1450	1160	–	7.8	1755	1400	–	9.1	2055	1760
71 x 47	–	4.0	910	610	–	5.5	1235	980	–	7.0	1565	1225	–	8.4	1895	1480	–	9.9	2225	1865

DIMENSIONS

Slope	A	B	C	D	E	F
2:1	0′–9″	0′–8″	0′–6 1/2″	0′–8 1/2″	0′–0 3/4″	0′–0 7/8″
3:1	1′–0 5/8″	1′–0″	0′–5 1/2″	0′–6 7/8″	0′–1 1/8″	0′–1 1/8″
4:1	1′–4 1/2″	1′–4″	0′–5 1/8″	0′–6 1/8″	0′–1 1/2″	0′–1 1/2″
5:1	1′–8 3/8″	1′–8″	0′–4 5/8″	0′–5 3/8″	0′–1 7/8″	0′–1 7/8″
6:1	2′–0 3/8″	2′–0″	0′–4 1/4″	0′–5 3/8″	0′–2 1/4″	0′–2 1/4″

INDIANA DEPARTMENT OF TRANSPORTATION

GRATED BOX END SECTION TYPE I DIMENSIONS AND QUANTITIES

JANUARY 1999

STANDARD DRAWING NO. E 715-GBTO-08

ANTHONY L. UREMOVICH REGISTERED No. 18095 STATE OF INDIANA PROFESSIONAL ENGINEER

DESIGN STANDARDS ENGINEER

DETAILS PLACED IN THIS FORMAT 11-15-99

/s/ Anthony L. Uremovich 11-15-99
DESIGN STANDARDS ENGINEER DATE

/s/ Firooz Zandi 11-15-99
CHIEF HIGHWAY ENGINEER DATE

ORIGINALLY APPROVED 1-04-99

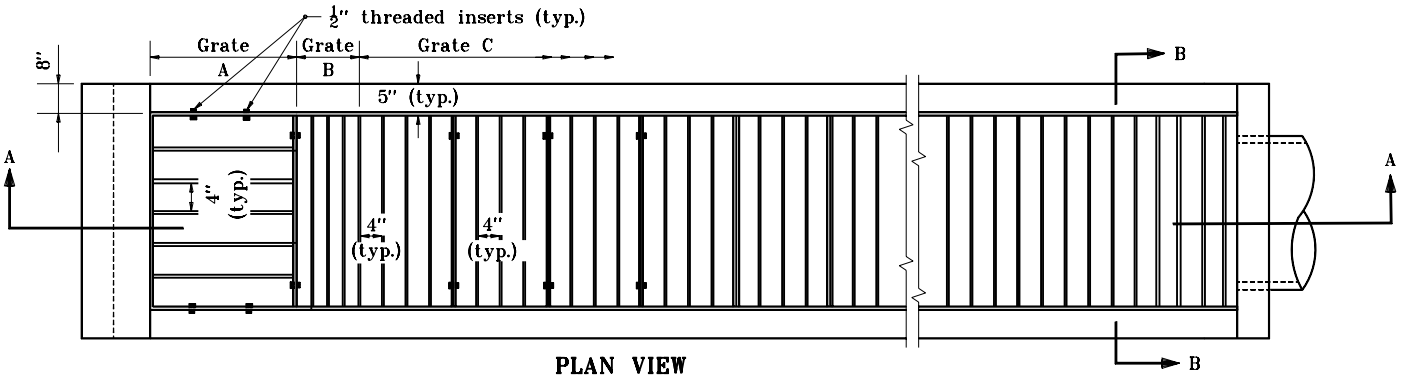

PLAN VIEW

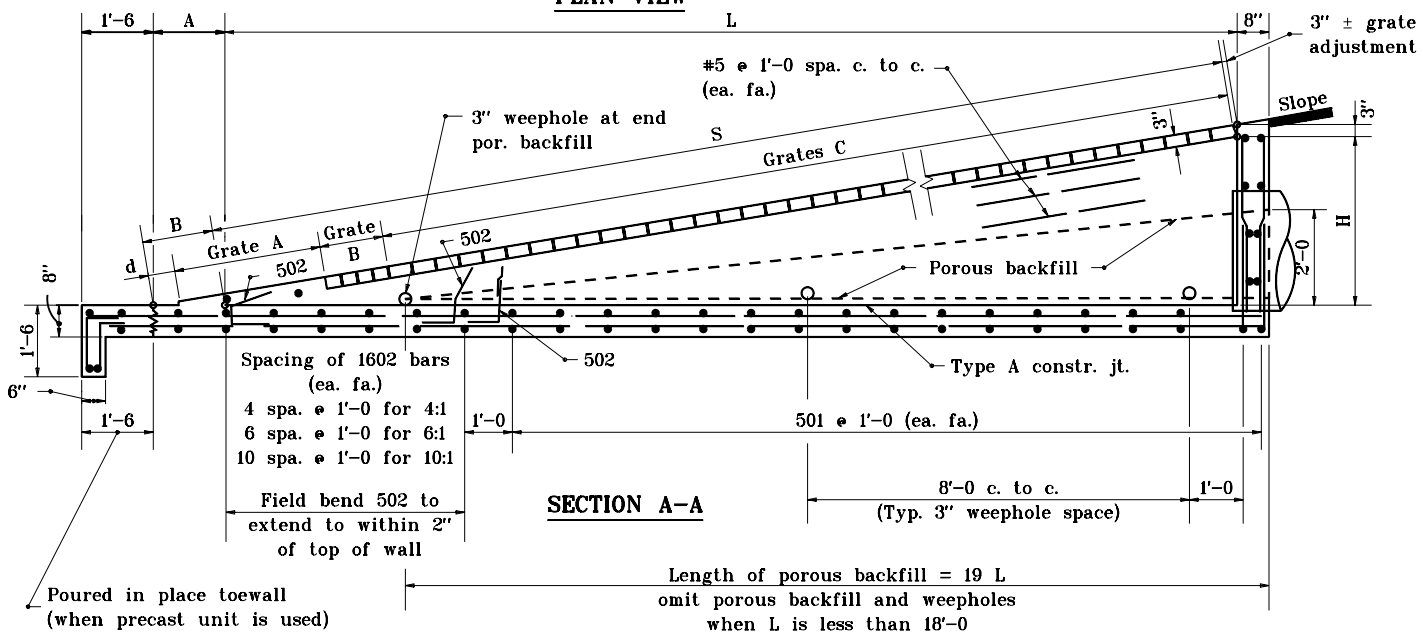

SECTION A-A

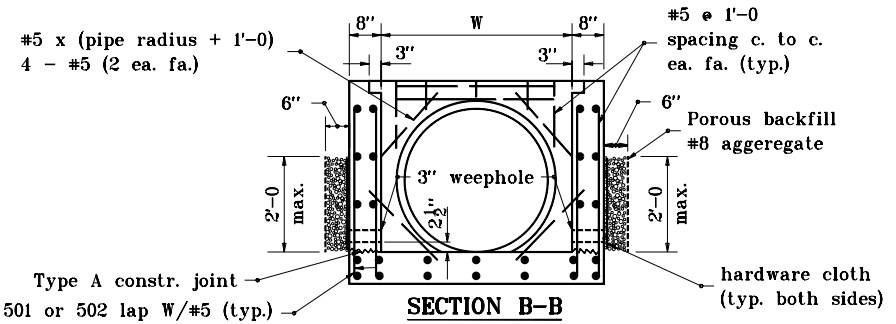

SECTION B-B

GENERAL NOTES

1. The invert grade of the grated box end section shall be the same as that of the pipe.
2. See Standard Drawings E 715-GBTT-05 and -06 for dimensions tables.
3. Type II grated box end sections shall be used for culverts parallel to the mainline within the clear zone.
4. See Standard Drawing E 715-GBTT-02 for bending diagrams.

INDIANA DEPARTMENT OF TRANSPORTATION

GRATED BOX END SECTION TYPE II

JANUARY 1999

STANDARD DRAWING NO. E 715-GBTT-01

ANTHONY L. UREMOVICH REGISTERED No. 18095 STATE OF INDIANA PROFESSIONAL ENGINEER

DESIGN STANDARDS ENGINEER

DETAILS PLACED IN THIS FORMAT 11-15-99

/s/ Anthony L. Uremovich 11-15-99
DESIGN STANDARDS ENGINEER DATE

/s/ Firooz Zandi 11-15-99
CHIEF HIGHWAY ENGINEER DATE

ORIGINALLY APPROVED 1-04-99

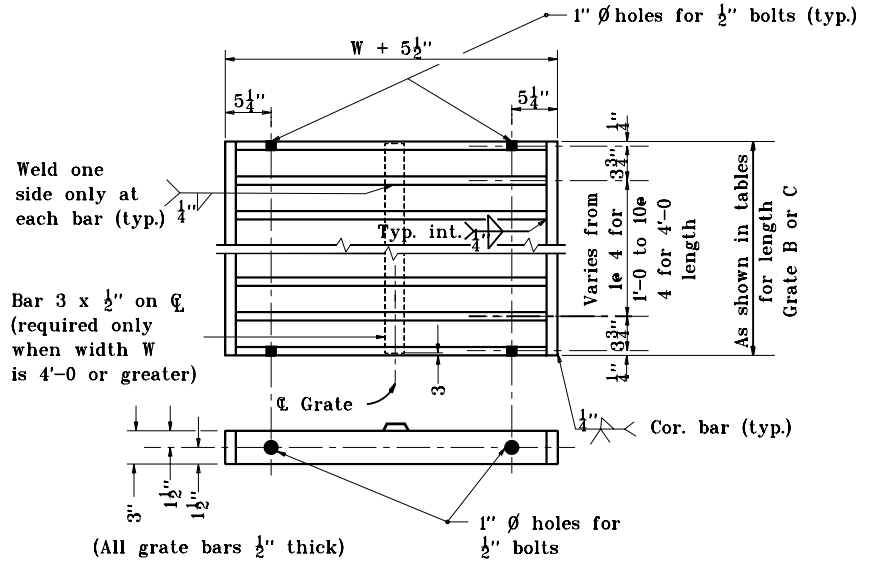

GRATE B & C

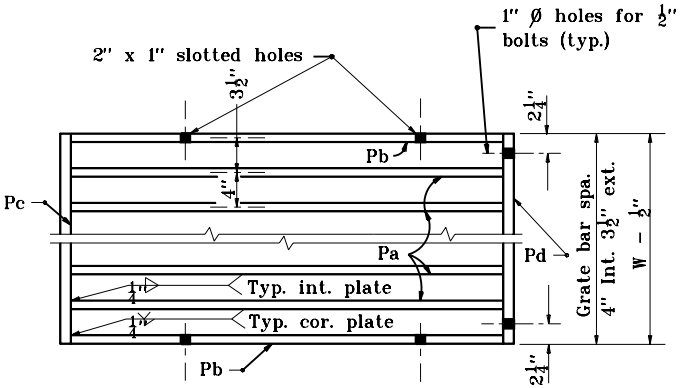

PLAN VIEW

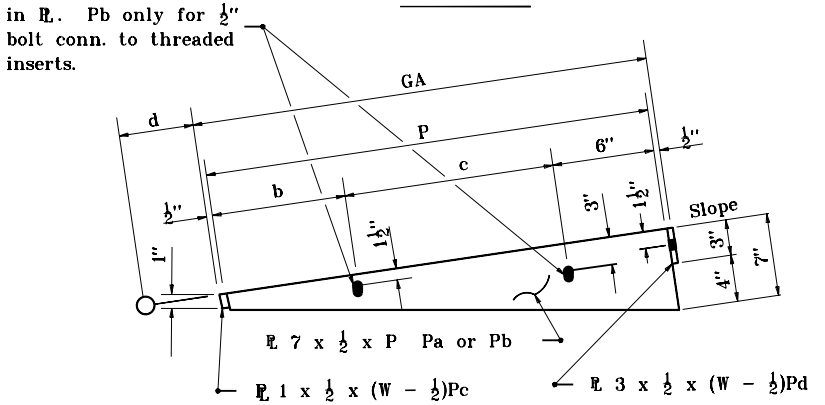

ELEVATION GRATE A

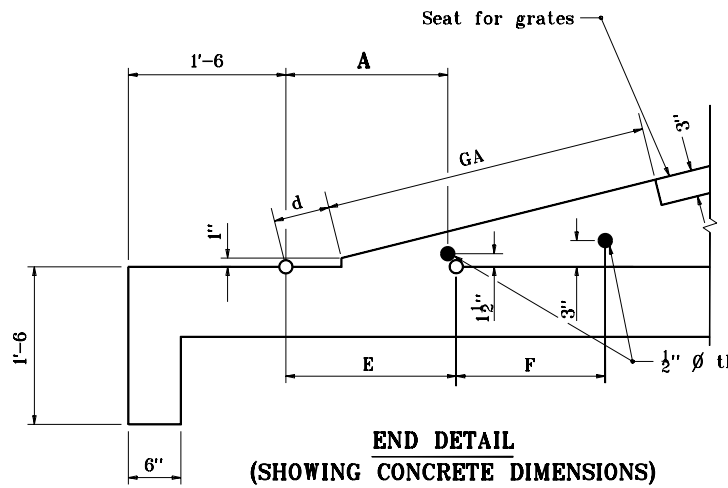

END DETAIL (SHOWING CONCRETE DIMENSIONS)

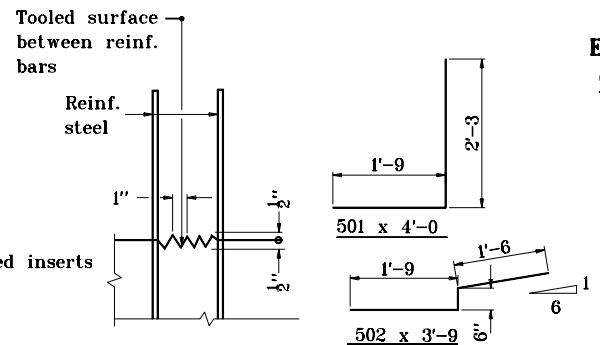

TYPE A CONSTR. JOINT

INDIANA DEPARTMENT OF TRANSPORTATION

GRATED BOX END SECTION TYPE II

JANUARY 1999

STANDARD DRAWING NO. E 715-GBTT-02

DETAILS PLACED IN THIS FORMAT 11-15-99

ANTHONY L. UREMOVICH REGISTERED No. 18095 STATE OF INDIANA PROFESSIONAL ENGINEER

/s/ Anthony L. Uremovich 11-15-99
DESIGN STANDARDS ENGINEER DATE

/s/ Firooz Zandi 11-15-99
CHIEF HIGHWAY ENGINEER DATE

DESIGN STANDARDS ENGINEER

ORGINALLY APPROVED 1-04-99

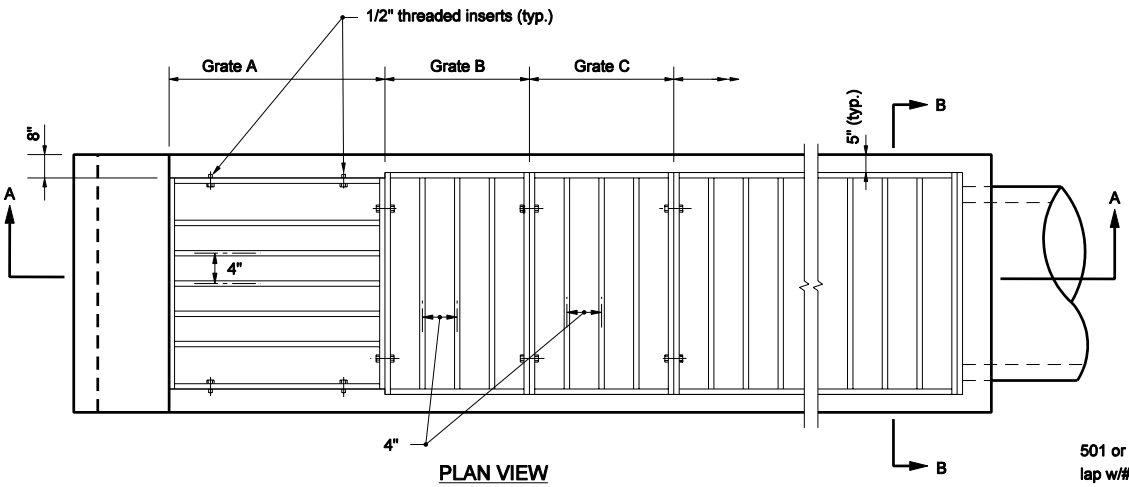

PLAN VIEW

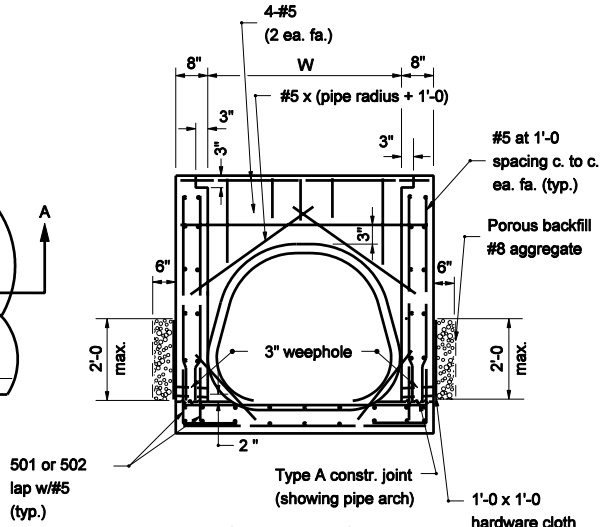

GRATE REMOVED
SECTION B-B

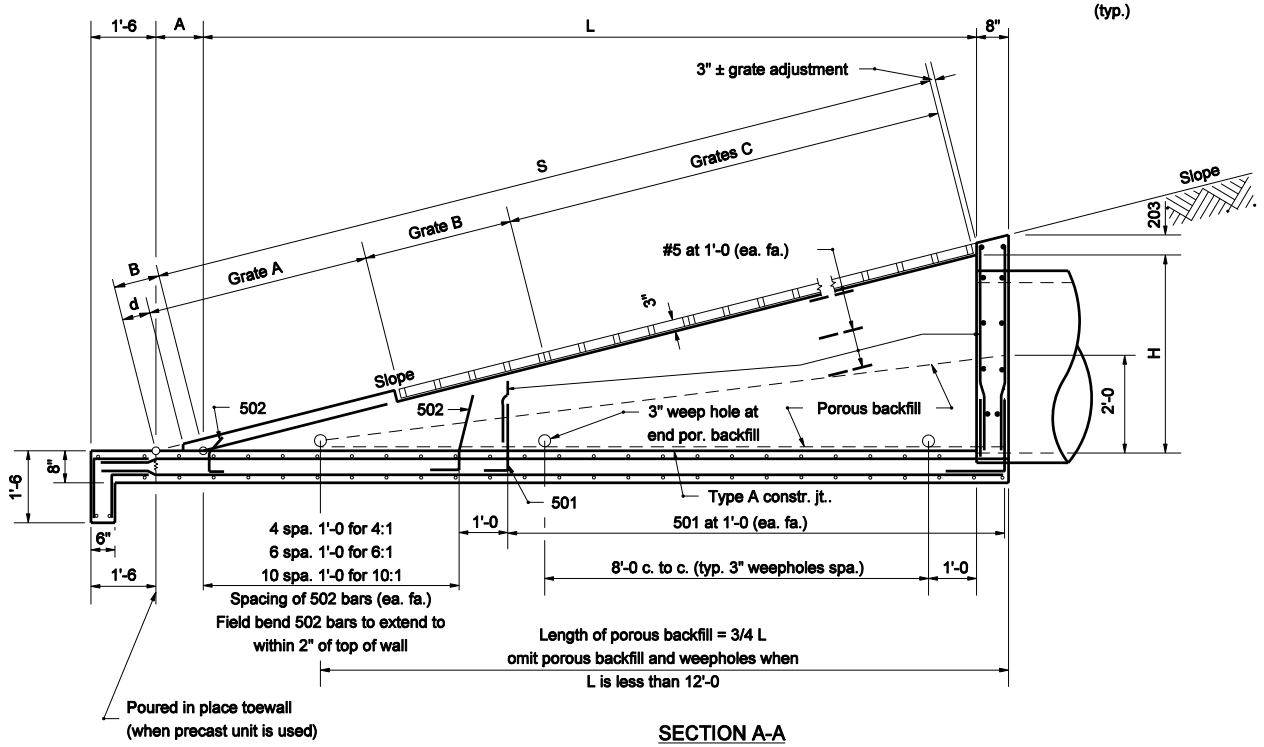

SECTION A-A

GENERAL NOTES

1. The invert grade of the grated box end section shall be the same as that of the pipe.
2. See Standard Drawings E 715-GBTT-05 and -06 for dimensions tables.
3. See Standard Drawing E 715-GBTT-02 for bending diagrams.
4. Type II grated box end sections shall be used for culverts parallel to the mainline within the clear zone.

INDIANA DEPARTMENT OF TRANSPORTATION

GRATED BOX END SECTION TYPE II

MARCH 2006

STANDARD DRAWING NO. E 715-GBTT-03

RICHARD L. VanCLEAVE REGISTERED No. 9750 STATE OF INDIANA PROFESSIONAL ENGINEER

DESIGN STANDARDS ENGINEER

/s/ Richard L. VanCleave — 3-01-06
DESIGN STANDARDS ENGINEER — DATE

/s/ Richard K. Smutzer — 3-01-06
CHIEF HIGHWAY ENGINEER — DATE

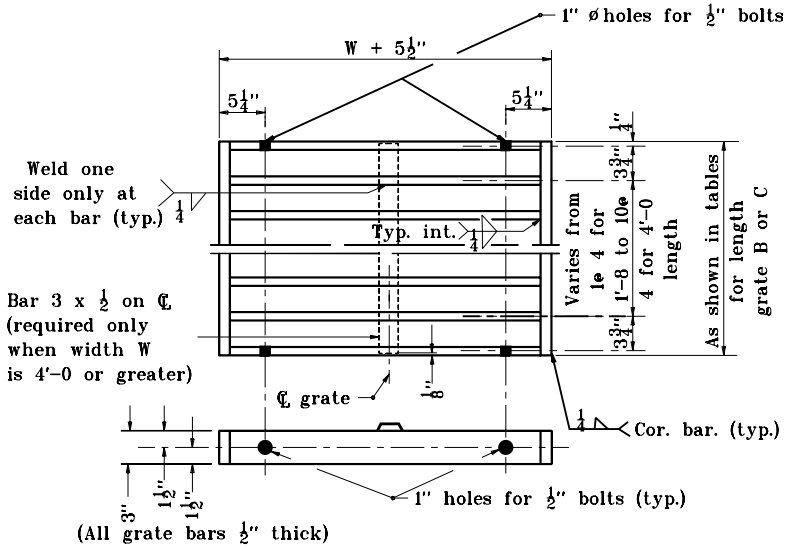

GRATE B & C

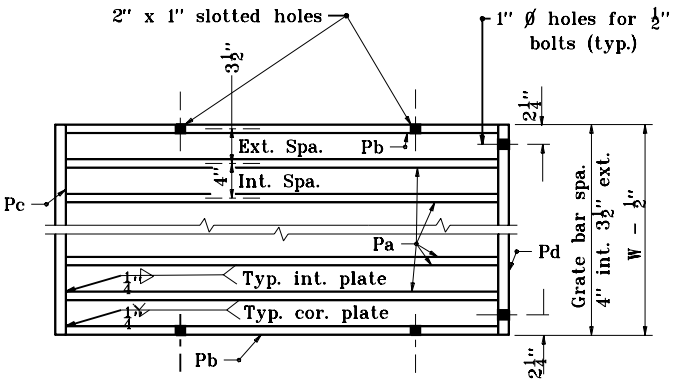

PLAN VIEW

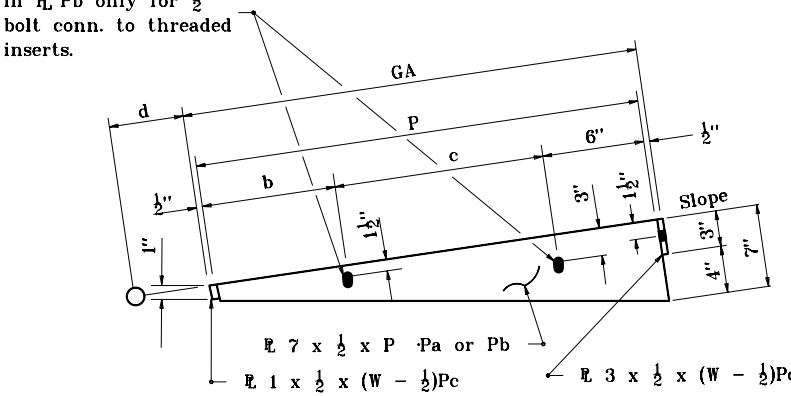

ELEVATION
GRATE A

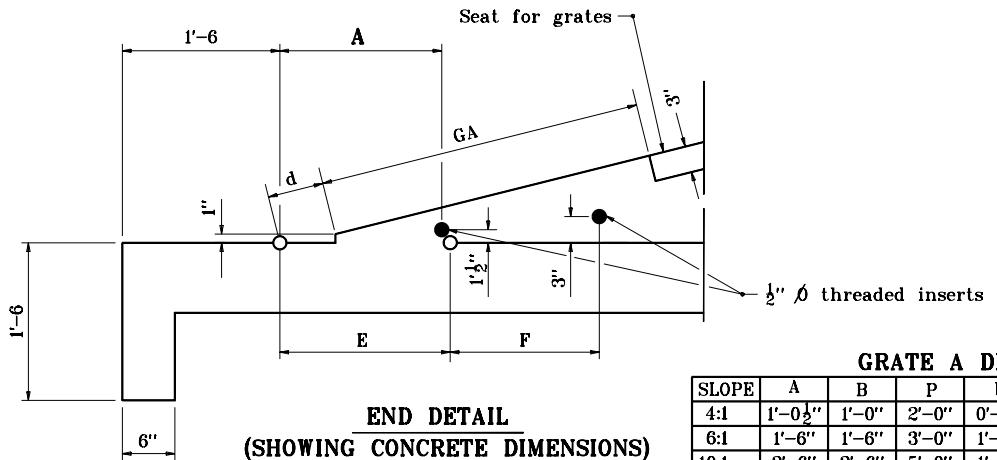

END DETAIL
(SHOWING CONCRETE DIMENSIONS)

GRATE A DIMENSIONS TABLE

SLOPE	A	B	P	b	c	d	E	F	G
4:1	1'-0½"	1'-0"	2'-0"	0'-8"	0'-10"	4"	1'-0½"	0'-10"	2'-1"
6:1	1'-6"	1'-6"	3'-0"	1'-0"	1'-6"	6"	1'-6½"	1'-6"	3'-1"
10:1	2'-6"	2'-6"	5'-0"	1'-8"	2'-10"	10"	2'-6½"	2'-10"	5'-1"

INDIANA DEPARTMENT OF TRANSPORTATION

GRATED BOX END SECTION TYPE II

JANUARY 1999

STANDARD DRAWING NO. **E 715-GBTT-04**

ANTHONY L. UREMOVICH REGISTERED No. 18095 STATE OF INDIANA PROFESSIONAL ENGINEER

DESIGN STANDARDS ENGINEER

DETAILS PLACED IN THIS FORMAT 11-15-99

/s/ Anthony L. Uremovich 11-15-99
DESIGN STANDARDS ENGINEER DATE

/s/ Firooz Zandi 11-15-99
CHIEF HIGHWAY ENGINEER DATE

ORIGINALLY APPROVED 1-04-99

4:1 Slope							
Pipe Diameter	H	L	W	S	Grate C		Grate B
					NO.	Length	Length
12	1'–5	5'–8	2'–0	5'–9	1	3'–4	1'–0
15 & 18	2'–0	8'–0	2'–0	8'–1	1	4'–0	2'–8
21 & 24	2'–6	10'–0	3'–0	10'–1	2	3'–0	2'–8
27 & 30	3'–1	12'–4	3'–0	12'–5	3	3'–0	2'–0
33 & 36	3'–7	14'–4	4'–0	14'–5	5	2'–4	1'–4
42	4'–2	16'–5	4'–0	17'–1	6	2'–4	1'–8
48	4'–8	18'–8	5'–0	19'–1	8	2'–0	1'–8
54	5'–3	21'–0	6'–0	21'–5	12	1'–8	–
60	5'–9	23'–0	6'–0	23'–5	12	1'–8	2'–0

10:1 Slope							
Pipe Diameter	H	L	W	S	Grate C		Grate B
					No.	Length	Length
12	1'–5	14'–2	2'–0	14'–1	2	4'–0	2'–8
15 & 18	2'–0	20'–0	2'–0	19'–9	4	3–8	1'–8
21 & 24	2'–6	25'–0	3'–0	24'–9	8	2'–8	–
27 & 30	3'–1	30'–10	3'–0	30'–5	9	3'–0	–
33 & 36	3'–7	35'–10	4'–0	35'–9	13	2'–4	2'–0
42	4'–2	41'–8	4'–0	41'–9	16	2'–4	1'–0
48	4'–8	46'–8	5'–0	46'–9	21	2'–0	1'–4
54	5'–3	52'–6	6'–0	52'–5	36	1'–4	1'–0
60	5'–9	57'–6	6'–0	57'–9	40	1'–4	1'–0

6:1 Slope							
Pipe Diameter	H	L	W	S	Grate C		Grate B
					No.	Length	Length
12	1'–5	8'–6	2'–0	8'–5	1	4'–0	2'–4
15 & 18	2'–0	12'–0	2'–0	11'–9	2	4'–0	1'–8
21 & 24	2'–6	15'–0	3'–0	15'–1	4	3'–0	1'–0
27 & 30	3'–1	18'–6	3'–0	18'–5	5	3'–0	1'–4
33 & 36	3'–7	21'–6	4'–0	21'–5	9	2'–0	1'–4
42	4'–2	25'–0	4'–0	25'–1	9	2'–4	2'–0
48	4'–8	28'–0	5'–0	28'–1	13	2'–0	–
54	5'–3	31'–6	6'–0	31'–9	17	1'–8	1'–4
60	5'–9	34'–6	6'–0	34'–9	19	1'–8	1'–0

GRATE A DIMENSIONS TABLE									
Slope	A	B	P	b	c	d	E	F	GA
4:1	1'–0½"	1'–0	2'–0	0'–8	0'–10	4"	1'–0½"	0'–10	2'–1
6:1	1'–6	1'–6	3'–0	1'–0	1'–6	6"	1'–6½"	1'–6	3'–1
10:1	2'–6	2'–6	5'–0	1'–8	2'–10	10"	2'–6½"	2'–10	5'–1

APPROXIMATE QUANTITIES												
Pipe Diameter	4:1 Slope				6:1 Slope				10:1 Slope			
	Conc., cys		Reinf. Steel, lb.	Str. Steel, lb.	Conc., cys		Reinf. Steel, lb.	Str. Steel, lb.	Conc., cys		Reinf. Steel, lb.	Str. Steel, lb.
	Conc. Pipe	C.M. Pipe			Conc. Pipe	C.M. Pipe			Conc. Pipe	C.M. Pipe		
12	1.1	1.1	295	335	1.5	1.5	400	480	2.3	2.4	605	790
15 & 18	1.6	1.6	395	445	2.2	2.2	550	645	3.4	3.4	865	1080
21 & 24	2.4	2.4	565	750	3.3	3.3	790	1130	5.2	5.2	1245	1830
27 & 30	2.9	3.0	695	910	4.2	4.3	980	1345	6.6	6.7	1580	2195
33 & 36	4.0	4.1	910	1415	5.7	5.8	1290	2115	9.1	9.2	2075	3455
42	4.8	4.9	1085	1655	6.9	7.0	1545	2415	11.0	11.2	2490	4015
48	6.2	6.3	1350	2230	8.8	9.0	1925	3265	14.2	14.4	3100	5425
54	7.8	8.0	1665	2955	11.3	11.4	2400	4375	18.1	18.3	3855	7440
60	8.7	8.9	1850	3215	12.6	12.8	2675	4780	20.4	20.4	4310	8175

INDIANA DEPARTMENT OF TRANSPORTATION

GRATED BOX END SECTION DIMENSIONS & QUANTITIES TYPE II

JANUARY 1999

STANDARD DRAWING NO. E 715–GBTT–05

ANTHONY L. UREMOVICH REGISTERED No. 18095 STATE OF INDIANA PROFESSIONAL ENGINEER

DESIGN STANDARDS ENGINEER

DETAILS PLACED IN THIS FORMAT 11-15-99

/s/ Anthony L. Uremovich 11-15-99
DESIGN STANDARDS ENGINEER DATE

/s/ Firooz Zandi 11-15-99
CHIEF HIGHWAY ENGINEER DATE

ORIGINALLY APPROVED 1-04-99

4:1 SLOPE							
PIPE SIZE	H	L	W	S	GRATE C		GRATE B
					No.	LENGTH	LENGTH
17 x 13	1'–6	6'–0	2'–0	6'–1	1	3'–8	1'–0
21 x 15	1'–8	6'–8	2'–0	6'–9	1	4'–0	1'–4
24 x 18	1'–11	7'–8	3'–0	7'–9	2	2'–8	1'–0
28 x 20	2'–1	8'–4	3'–0	8'–5	2	3'–0	1'–0
35 x 24	2'–5	9'–8	4'–0	9'–9	3	2'–4	1'–4
42 x 29	2'–10	11'–4	4'–0	11'–5	5	2'–0	–
49 x 33	3'–2	12'–8	5'–0	12'–9	5	2'–0	1'–4
57 x 38	3'–7	14'–4	5'–0	14'–5	6	2'–0	1'–0
64 x 43	4'–0	16'–0	6'–0	16'–5	9	1'–8	–
71 x 47	4'–4	17'–4	6'–0	17'–9	9	1'–8	1'–4

10:1 SLOPE							
PIPE SIZE	H	L	W	S	GRATE C		GRATE B
					No.	LENGTH	LENGTH
17 x 13	1'–6	15'–0	2'–0	14'–9	2	4'–0	3'–4
21 x 15	1'–8	16'–8	2'–0	16'–5	3	4'–0	1'–0
24 x 18	1'–11	19'–2	3'–0	19'–1	5	2'–6	2'–4
28 x 20	2'–1	20'–10	3'–0	20'–9	5	3'–0	2'–4
35 x 24	2'–5	24'–2	4'–0	24'–1	8	2'–4	2'–0
42 x 29	2'–10	28'–4	4'–0	28'–1	10	2'–4	1'–4
49 x 33	3'–2	31'–8	5'–0	31'–9	17	1'–8	–
57 x 38	3'–7	35'–10	5'–0	35'–9	23	1'–4	1'–8
64 x 43	4'–0	40'–0	6'–0	40'–1	22	1'–8	–
71 x 47	4'–4	43'–4	6'–0	43'–5	24	1'–8	–

6:1 SLOPE							
PIPE SIZE	H	L	W	S	GRATE C		GRATE B
					No.	LENGTH	LENGTH
17 x 13	1'–6	9'–0	2'–0	8'–9	1	4'–0	2'–8
21 x 15	1'–8	10'–0	2'–0	9'–9	1	4'–0	3'–8
24 x 18	1'–11	11'–6	3'–0	11'–5	3	2'–8	1'–4
28 x 20	2'–1	12'–6	3'–0	12'–5	3	3'–0	1'–4
35 x 24	2'–5	14'–6	4'–0	14'–5	5	2'–0	2'–4
42 x 29	2'–10	17'–0	4'–0	17'–1	7	2'–0	1'–0
49 x 33	3'–2	19'–0	5'–0	19'–1	8	2'–0	1'–0
57 x 38	3'–7	21'–6	5'–0	21'–5	9	2'–0	1'–4
64 x 43	4'–0	24'–0	6'–0	24'–1	12	1'–8	2'–0
71 x 47	4'–4	26'–0	6'–0	26'–1	18	1'–4	–

APPROXIMATE QUANTITIES									
PIPE Size	4:1 SLOPE			6:1 SLOPE			10:1 SLOPE		
	Str. Steel, lb.	Conc., cys	Reinf. Steel, lb.	Str. Steel, lb.	Conc., cys	Reinf. Steel, lb.	Str. Steel, lb.	Conc., cys	Reinf. Steel, lb.
17 x 13	355	1.2	305	495	1.6	415	820	2.5	640
21 x 15	385	1.3	335	540	1.8	460	910	2.8	715
24 x 18	605	1.8	440	875	2.5	610	1445	3.9	935
28 x 20	645	2.0	465	940	2.7	645	1545	4.2	1020
35 x 24	975	2.7	615	1435	3.7	855	2375	5.8	1325
42 x 29	1145	3.1	700	1710	4.4	995	2750	6.9	1570
49 x 33	1520	4.0	880	2270	5.6	1230	3825	8.9	1960
57 x 38	1715	4.5	985	2525	6.4	1400	4400	10.2	2245
64 x 43	2295	5.7	1210	3335	8.1	1725	5560	12.9	2755
71 x 47	2470	6.2	1310	3735	8.9	1880	6005	14.2	3015

INDIANA DEPARTMENT OF TRANSPORTATION

GRATED BOX END SECTION TYPE II DIMENSIONS AND QUANTITIES

JANUARY 1999

STANDARD DRAWING NO. **E 715–GBTT–06**

ANTHONY L. UREMOVICH REGISTERED No. 18095 STATE OF INDIANA PROFESSIONAL ENGINEER

DESIGN STANDARDS ENGINEER

DETAILS PLACED IN THIS FORMAT 11-15-99

/s/ Anthony L. Uremovich 11-15-99
DESIGN STANDARDS ENGINEER DATE

/s/ Firooz Zandi 11-15-99
CHIEF HIGHWAY ENGINEER DATE

ORIGINALLY APPROVED 1-04-99

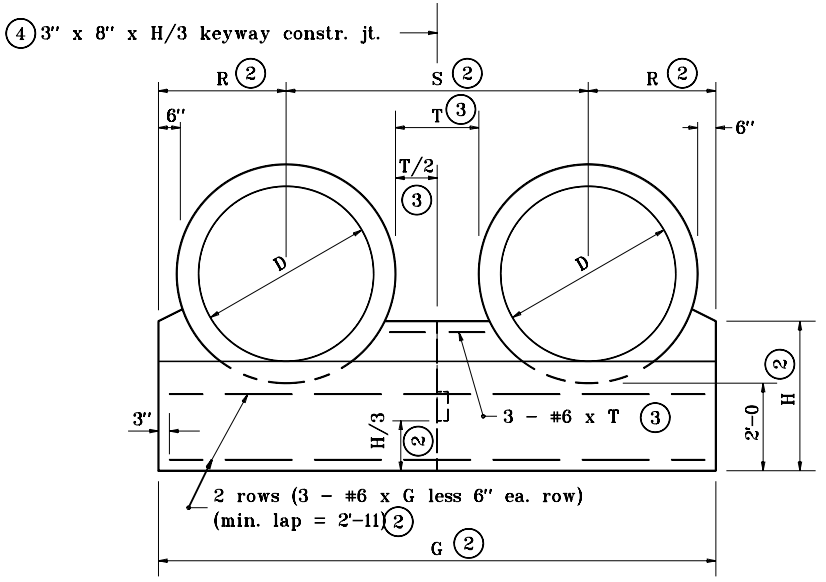

ANCHOR FOR DOUBLE PIPE INSTALLATION
FRONT ELEVATION

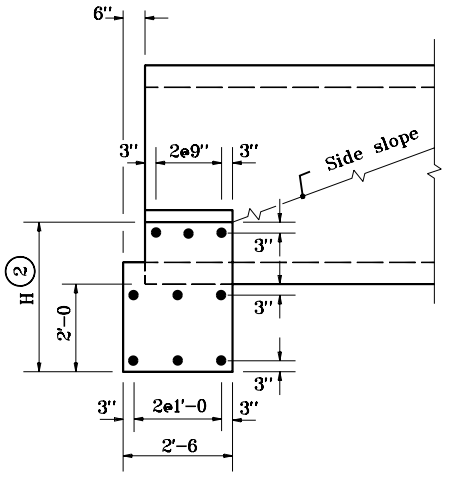

SECTION THROUGH ANCHOR

GENERAL NOTES

1. Circular reinforced concrete pipes shown. For details of other pipe alternates, see partial elevations on Standard Drawing E 715-MPCA-02.

(2) For dimension enter chart on Standard Drawing E 715-ANCH-01 with known dimension D.

(3) T = Clear distance between pipes.
For D less than 48", T = 2'-0.
For D of 48" to 96", T = 1/2 D
For D greater than 96", T = 4'-0.

(4) No joint required if G is less than or equal to 30'. One joint required if G is greater than 30' but less than or equal to 42'. Two joints required if G is greater than 42'.

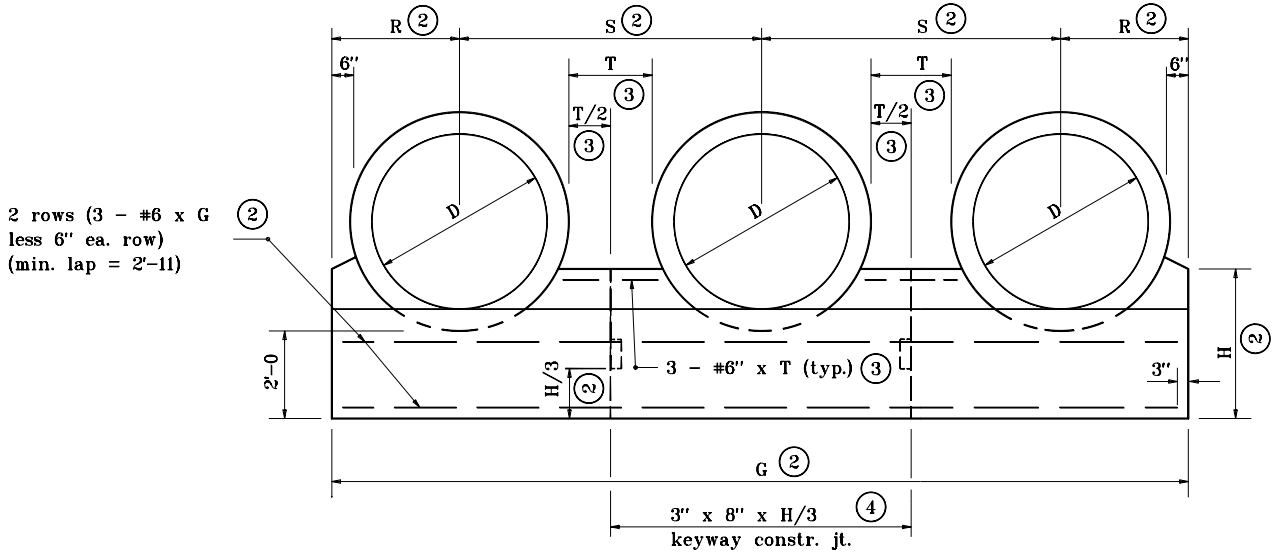

ANCHOR FOR TRIPLE PIPE INSTALLATION
FRONT ELEVATION

INDIANA DEPARTMENT OF TRANSPORTATION

MULTIPLE PIPE CONCRETE ANCHORS

JANUARY 1998

STANDARD DRAWING NO. **E 715-MPCA-01**

ANTHONY L. UREMOVICH REGISTERED No. 18095 STATE OF INDIANA PROFESSIONAL ENGINEER

DESIGN STANDARDS ENGINEER

DETAILS PLACED IN THIS FORMAT	7-27-99
/s/ Anthony L. Uremovich, DESIGN STANDARDS ENGINEER	7-27-99 DATE
/s/ Firooz Zandi, CHIEF HIGHWAY ENGINEER	7-27-99 DATE
ORIGINALLY APPROVED	1-02-98

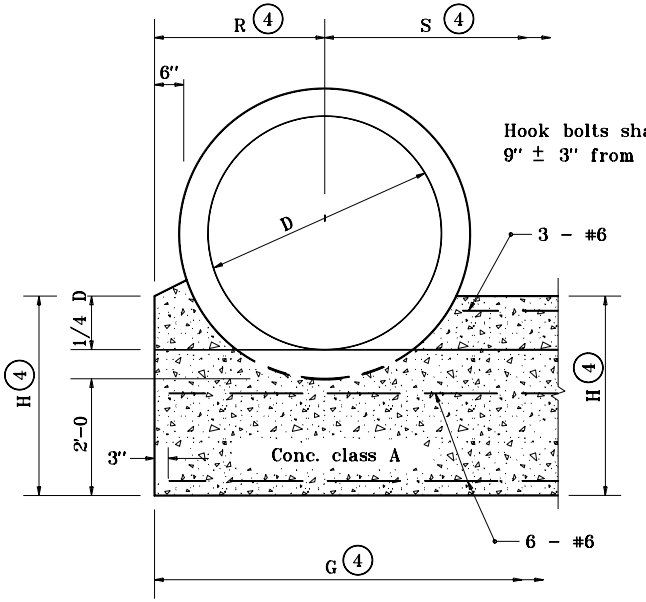

ANCHOR FOR
REINFORCED CONCRETE PIPE
PARTIAL ELEVATION

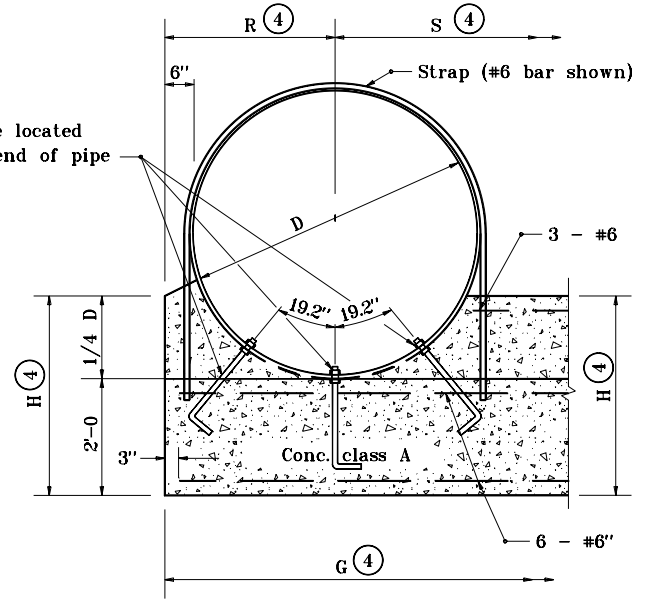

ANCHOR FOR
CORRUGATED METAL PIPE
PARTIAL ELEVATION

GENERAL NOTES

1. Anchor straps shall be used at both upstream and downstream ends of all C.M. pipes with a diameter or span of 42" or greater.
2. Hook bolts and anchor straps shall be used for all C.M. pipes with a diameter or span of 84" or greater.
3. Riprap shall be placed at the ends of pipe structures when shown on the plans.

(4) For dimension, enter chart on Standard Drawing E 715-ANCH-01 with known dimension D.

(5) For dimension, enter chart on Standard Drawing E 715-ANCH-02 with known span and rise.

LEGEND

C.M. = Corrugated Metal

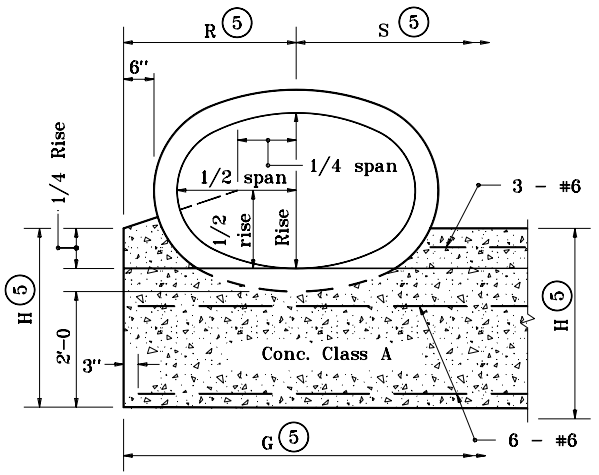

ANCHOR FOR
REINFORCED CONCRETE HORIZONTAL ELLIPTICAL PIPE
PARTIAL ELEVATION

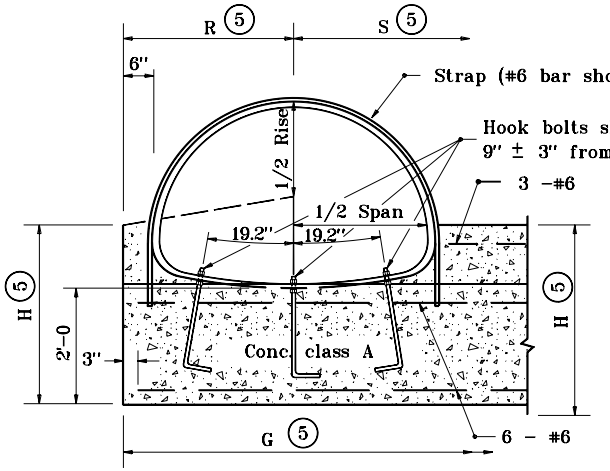

ANCHOR FOR CORRUGATED METAL PIPE-ARCH
PARTIAL ELEVATION

INDIANA DEPARTMENT OF TRANSPORTATION

MULTIPLE PIPE CONCRETE ANCHOR

JANUARY 1998

STANDARD DRAWING NO. **E 715-MPCA-02**

ANTHONY L. UREMOVICH REGISTERED No. 18095 STATE OF INDIANA PROFESSIONAL ENGINEER

DESIGN STANDARDS ENGINEER

DETAILS PLACED IN THIS FORMAT	7-27-99
/s/ Anthony L. Uremovich, DESIGN STANDARDS ENGINEER	7-27-99 DATE
/s/ Firooz Zandi, CHIEF HIGHWAY ENGINEER	7-27-99 DATE
ORIGINALLY APPROVED	1-02-98

PIPE DIA.	END SECTION THICK. (in.)	DIMENSIONS					APPROX. SLOPE	BODY
		A (±1")	B (Max.)	H (±1")	L (±1½")	W (±2")		
12	.064	6	6	6	21	24	2½:1	1 Pc.
15	.064	7	8	6	26	30	2½:1	1 Pc.
18	.064	8	10	6	31	36	2½:1	1 Pc.
21	.064	9	12	6	36	42	2½:1	1 Pc.
24	.064	10	13	6	41	48	2½:1	1 Pc.
30	.079	12	16	8	51	60	2½:1	1 Pc.
36	.079	14	19	9	60	72	2½:1	2 Pc.

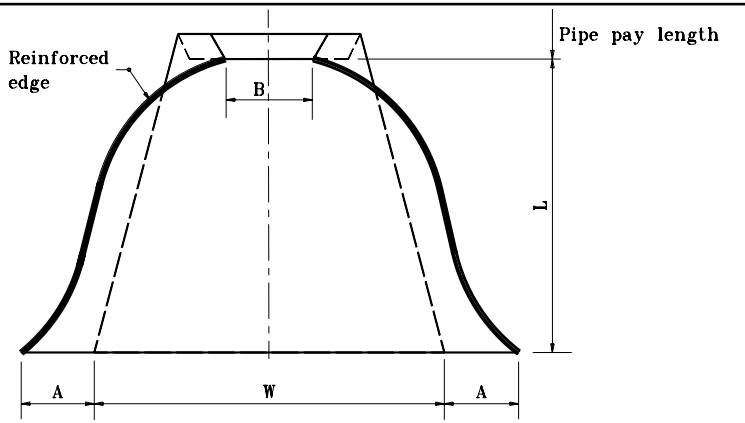

PLAN VIEW

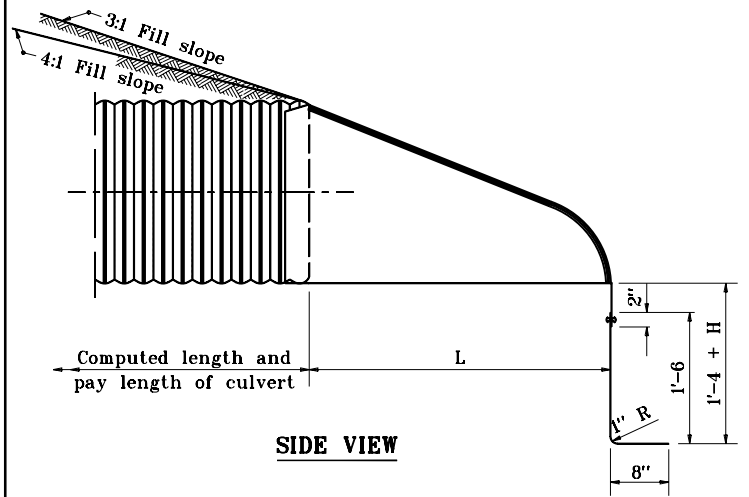

SIDE VIEW

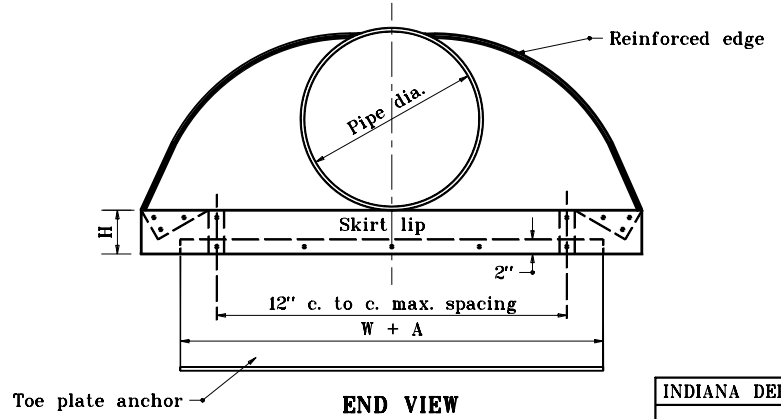

END VIEW

INDIANA DEPARTMENT OF TRANSPORTATION

METAL PIPE END SECTION

JANUARY 1998

STANDARD DRAWING NO. E 715-MPES-01

ANTHONY L. UREMOVICH REGISTERED No. 18095 STATE OF INDIANA PROFESSIONAL ENGINEER

DESIGN STANDARDS ENGINEER

DETAILS PLACED IN THIS FORMAT 11-15-99

/s/ Anthony L. Uremovich 11-15-99
DESIGN STANDARDS ENGINEER DATE

/s/ Firooz Zandi 11-15-99
CHIEF HIGHWAY ENGINEER DATE

ORIGINALLY APPROVED 1-02-98

PIPE-ARCH DIMENSIONS		END SECTION THICK. (in.)	DIMENSIONS					APPROX. SLOPE	BODY
			A	B	H	L	W		
SPAN	RISE		(±1")	(Max.)	(± 1")	(±1½")	(±2")		
17	13	.064	7	9	6	19	30	2½:1	1 Pc.
21	15	.064	7	10	6	23	36	2½:1	1 Pc.
24	18	.064	8	12	6	28	42	2½:1	1 Pc.
28	20	.064	9	14	6	32	48	2½:1	1 Pc.
35	24	.079	10	16	8	39	60	2½:1	1 Pc.
42	29	.079	12	18	9	46	75	2½:1	1 Pc.

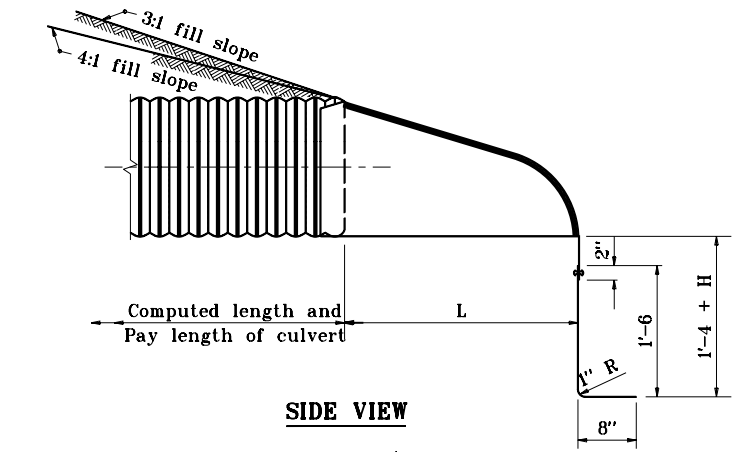

SIDE VIEW

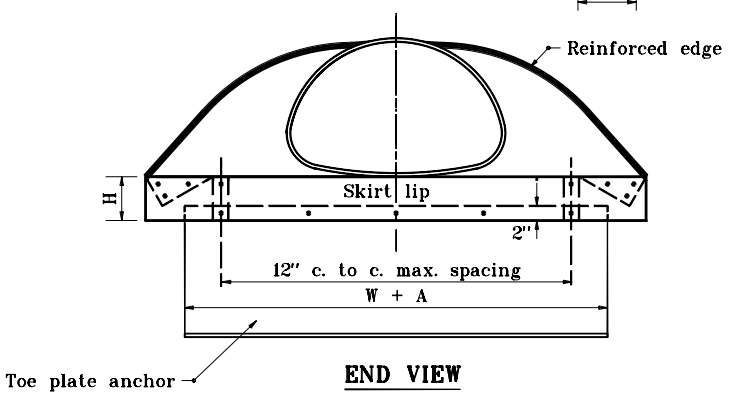

END VIEW

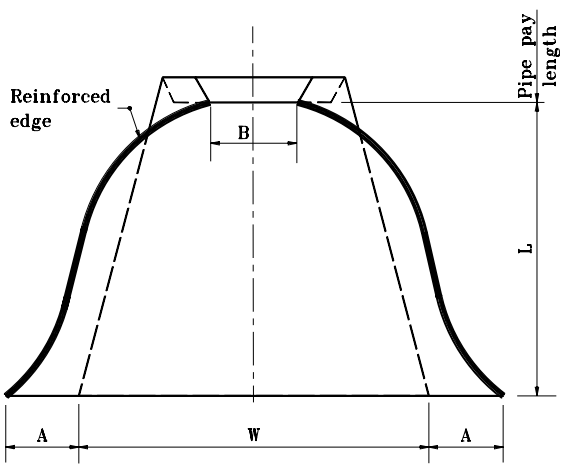

PLAN VIEW

INDIANA DEPARTMENT OF TRANSPORTATION

METAL PIPE ARCH END SECTION

JANUARY 1998

STANDARD DRAWING NO. E 715-MPES-02

ANTHONY L. UREMOVICH REGISTERED No. 18095 STATE OF INDIANA PROFESSIONAL ENGINEER

DESIGN STANDARDS ENGINEER

DETAILS PLACED IN THIS FORMAT 11-15-99

/s/ Anthony L. Uremovich 11-15-99
DESIGN STANDARDS ENGINEER DATE

/s/ Firooz Zandi 11-15-99
CHIEF HIGHWAY ENGINEER DATE

ORIGINALLY APPROVED 1-02-98

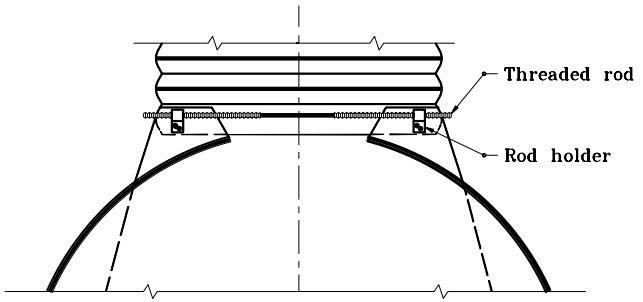

TYPE 1
FOR 17" x 13" THROUGH 42" x 29" ONLY

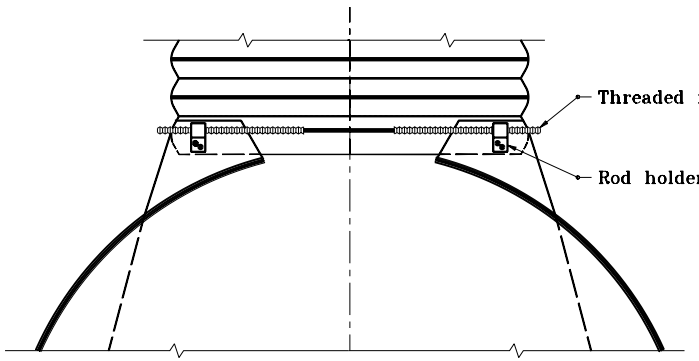

TYPE 4
FOR 30" THROUGH 36" ONLY

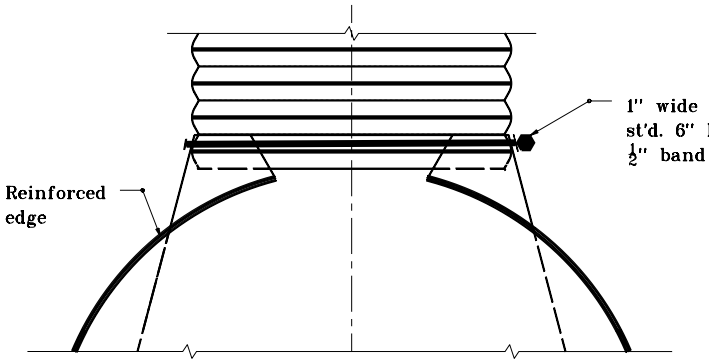

ALTERNATE TYPE 3
FOR 12" THROUGH 24" ONLY

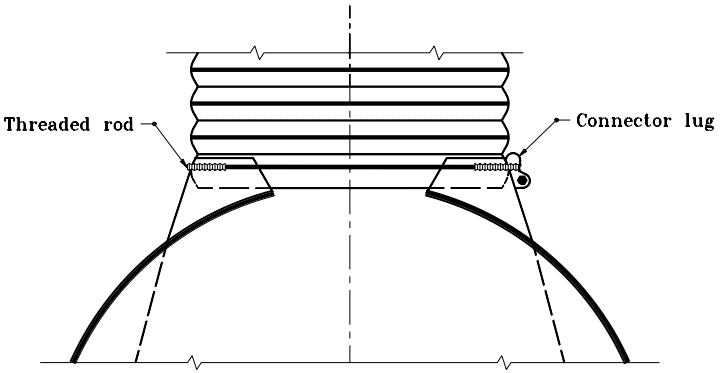

TYPE 3
FOR 12" THROUGH 24" ONLY

INDIANA DEPARTMENT OF TRANSPORTATION

METAL PIPE
END SECTION CONNECTIONS

JANUARY 1998

STANDARD DRAWING NO. **E 715-MPES-03**

ANTHONY L. UREMOVICH REGISTERED No. 18095 STATE OF INDIANA PROFESSIONAL ENGINEER

DESIGN STANDARDS ENGINEER

DETAILS PLACED IN THIS FORMAT 7-27-99

/s/ Anthony L. Uremovich 7-27-99
DESIGN STANDARDS ENGINEER DATE

/s/ Firooz Zandi 7-27-99
CHIEF HIGHWAY ENGINEER DATE

ORIGINALLY APPROVED 1-02-98

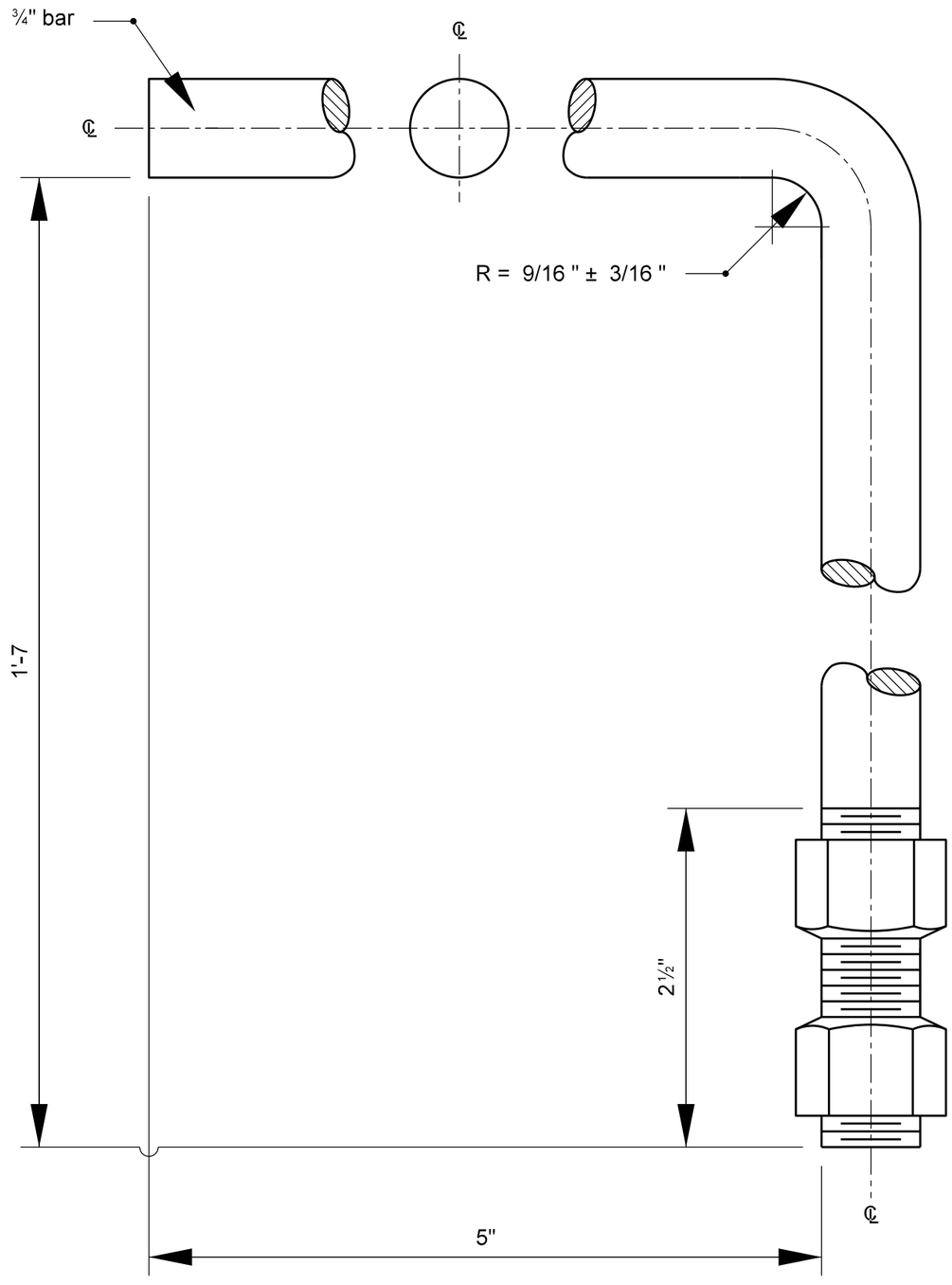

GALVANIZED
HOOK BOLT AND NUTS

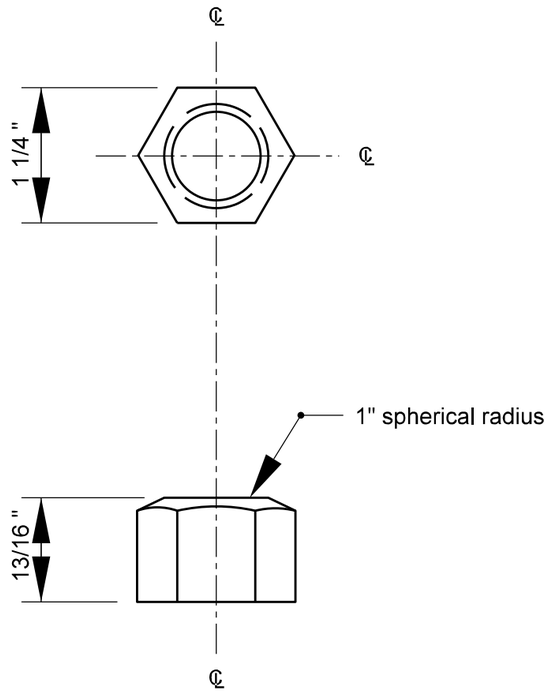

GENERAL NOTES

1. Hook bolts and anchor straps shall be used at both upstream and downstream ends of all C.A., C.S., and structural plate pipes and pipe diameter or span of 84" or greater.
2. See Standard Drawing E 715-PASD-01 for anchor strap details.

INDIANA DEPARTMENT OF TRANSPORTATION

PIPE ANCHOR HOOK
BOLT DETAILS

STANDARD DRAWING NO. E 715-PAHB-01

ANTHONY L. UREMOVICH REGISTERED No. 18095 STATE OF INDIANA PROFESSIONAL ENGINEER

DESIGN STANDARDS ENGINEER

APRIL 1995

DETAILS PLACED IN THIS FORMAT ON 7-27-95

/s/ Anthony L. Uremovich 7-27-99
DESIGN STANDARDS ENGINEER DATE

/s/ Firooz Zandi 7-27-99
CHIEF HIGHWAY ENGINEER DATE

ORIGINALLY APPROVED 4-01-95

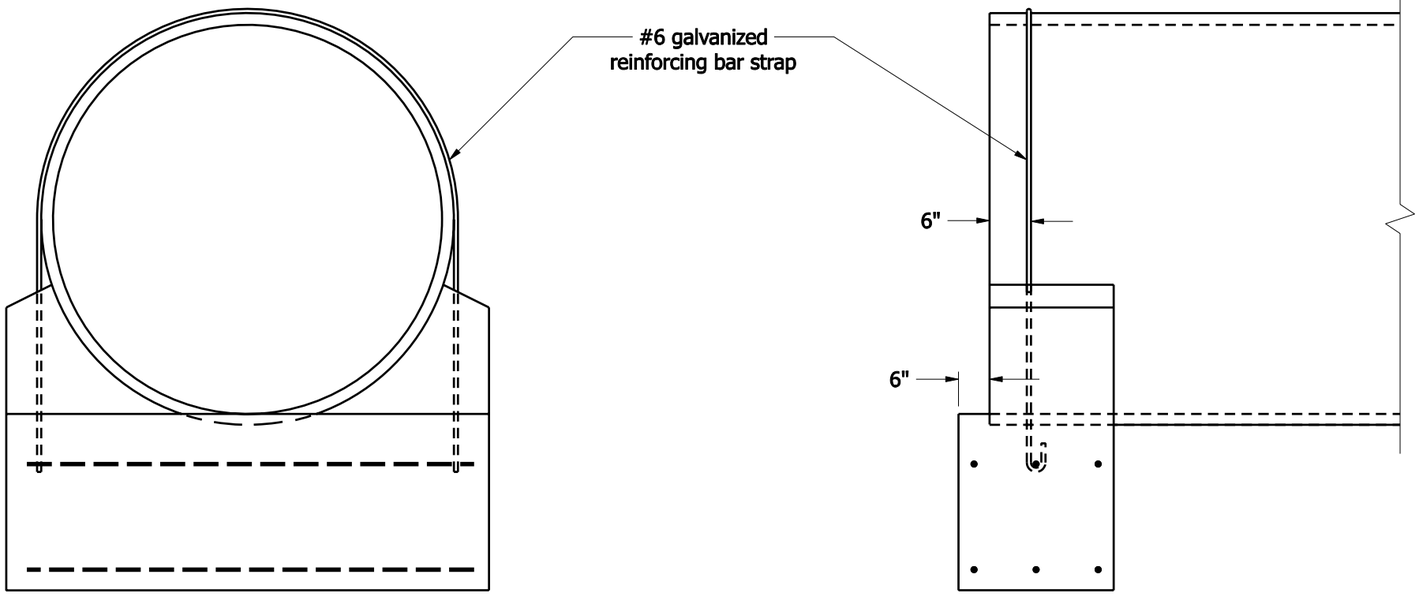

#6 REINFORCING BAR STRAP DETAILS

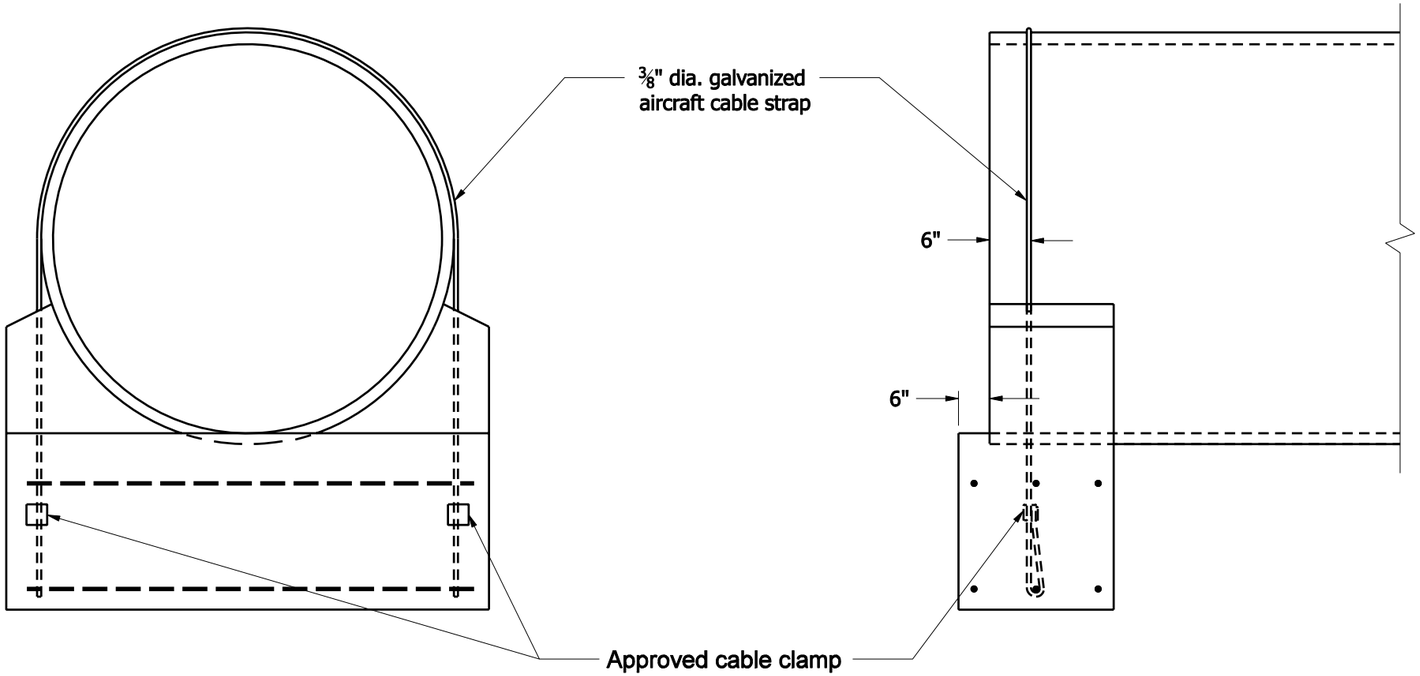

3/8" AIRCRAFT CABLE STRAP DETAILS

GENERAL NOTES

1. See Standard Drawing E 715-PAHB-01 for hook bolt details.

INDIANA DEPARTMENT OF TRANSPORTATION

PIPE ANCHOR STRAP DETAILS

SEPTEMBER 2008

STANDARD DRAWING NO. E 715- PASD-01

RICHARD L. VanCLEAVE REGISTERED No. 9750 STATE OF INDIANA PROFESSIONAL ENGINEER

DESIGN STANDARDS ENGINEER

/s/ Richard L. VanCleave 09/02/08
DESIGN STANDARDS ENGINEER DATE

/s/ Mark A. Miller 09/02/08
CHIEF HIGHWAY ENGINEER DATE

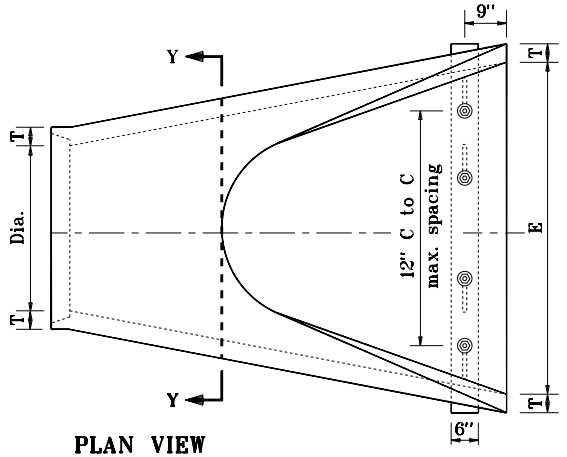

PLAN VIEW

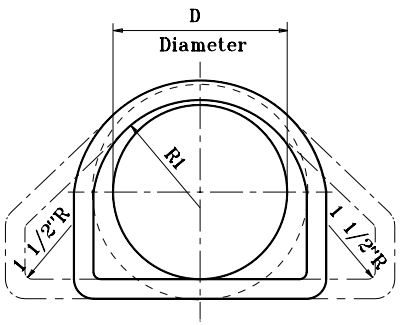

SECTION Y-Y

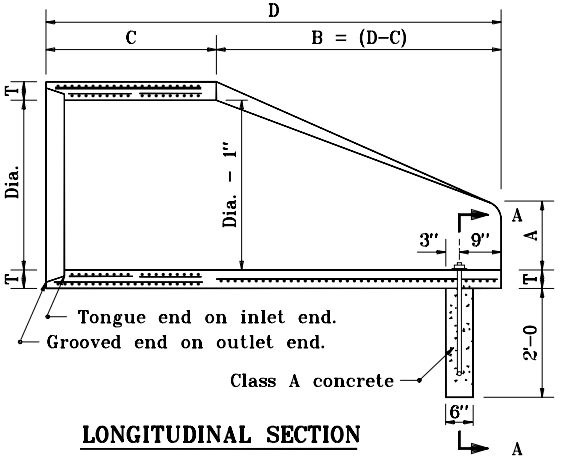

LONGITUDINAL SECTION

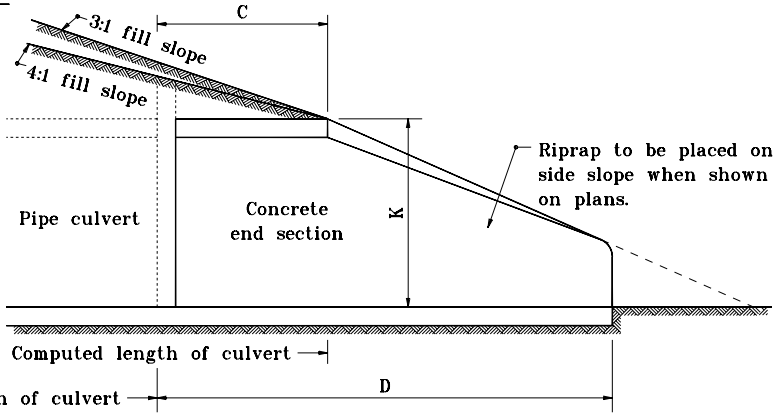

SLOPE DETAIL

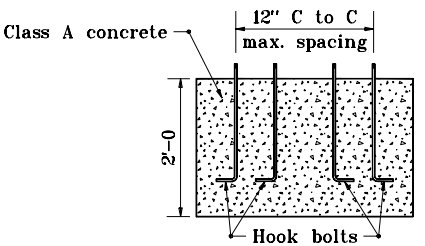

SECTION A-A

Concrete Pipe Toe Anchor

TABLE OF DIMENSIONS

DIA.	T (min.)	A (±1")	C (±1")	D (±1")	E (±1")	K	R1	R2	APPROX. WEIGHT, lb.
12"	2"	5"	4'-3	6'-2	2'-0	1.3	10 1/8"	9"	800
15"	2 1/4"	7"	4'-0	6'-3	2'-6	1.5	12 1/2"	11"	1100
18"	2 1/2"	11"	4'-1	6'-2	3'-0	1.8	15 1/2"	12"	1300
21"	2 3/4"	11"	3'-6	6'-3	3'-6	2.1	16 1/8"	13"	1500
24"	3"	1'-0	2'-8	6'-3	4'-0	2.3	16 3/16"	14"	1800
27"	3 1/4"	1'-1	2'-5	6'-3	4'-6	2.6	18 3/16"	14 1/2"	2100
30"	3 1/2"	1'-2	1'-10	6'-3	5'-0	2.9	18 1/2"	15"	2400
33"	3 3/4"	1'-3	3'-6	8'-3	5'-6	3.1	23 3/4"	17 1/2"	4100
36"	4"	1'-5	3'-1	8'-3	6'-0	3.4	24 5/16"	20"	4200

INDIANA DEPARTMENT OF TRANSPORTATION

PRECAST CONCRETE END SECTION

MAY 1998

STANDARD DRAWING NO. E 715-PCES-01

ANTHONY L. UREMOVICH REGISTERED No. 18095 STATE OF INDIANA PROFESSIONAL ENGINEER

DESIGN STANDARDS ENGINEER

DETAILS PLACED IN THIS FORMAT 11-15-99

/s/ Anthony L. Uremovich 11-15-99
DESIGN STANDARDS ENGINEER DATE

/s/ Firooz Zandi 11-15-99
CHIEF HIGHWAY ENGINEER DATE

ORIGINALLY APPROVED 5-01-98

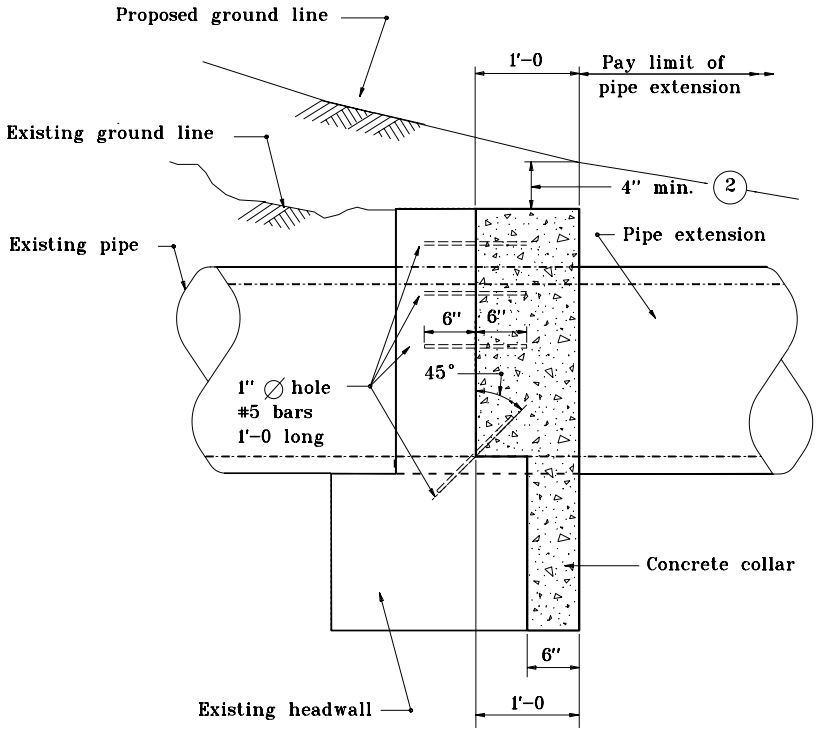

SIDE VIEW

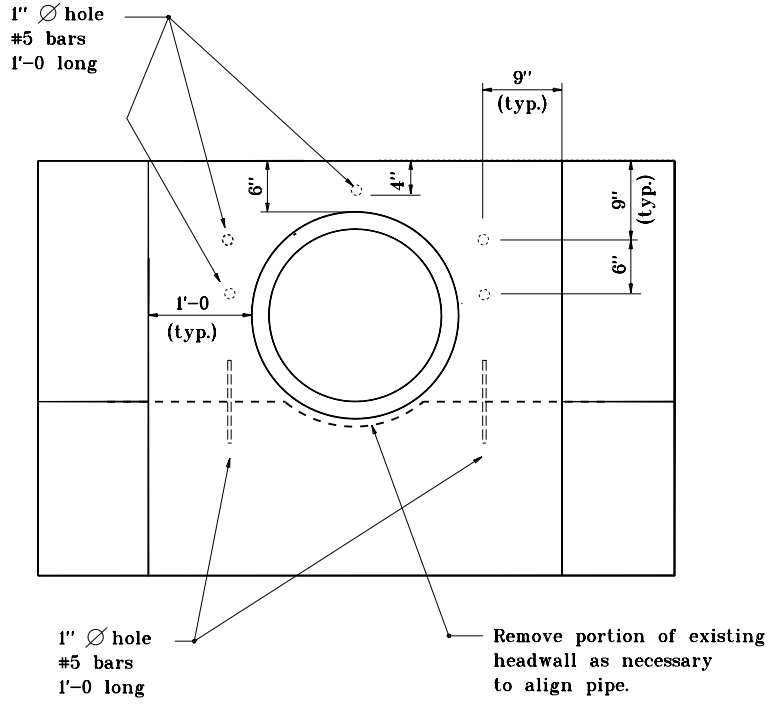

END VIEW

NOTES:

1. For other types of pipe end structures and pipes larger then 33" ∅, collar details are shown on the plans.

(2) Remove portions of existing headwall if required to maintain 4" ground cover.

INDIANA DEPARTMENT OF TRANSPORTATION

CONCRETE COLLAR FOR PIPE EXTENSION

JANUARY 1998

STANDARD DRAWING NO. **E 715-PCEX-01**

ANTHONY L. UREMOVICH REGISTERED No. 18095 STATE OF INDIANA PROFESSIONAL ENGINEER

DESIGN STANDARDS ENGINEER

DETAILS PLACED IN THIS FORMAT 7-27-99

/s/ Anthony L. Uremovich 7-27-99
DESIGN STANDARDS ENGINEER DATE

/s/ Firooz Zandi 7-27-99
CHIEF HIGHWAY ENGINEER DATE

ORIGINALLY APPROVED 1-02-98

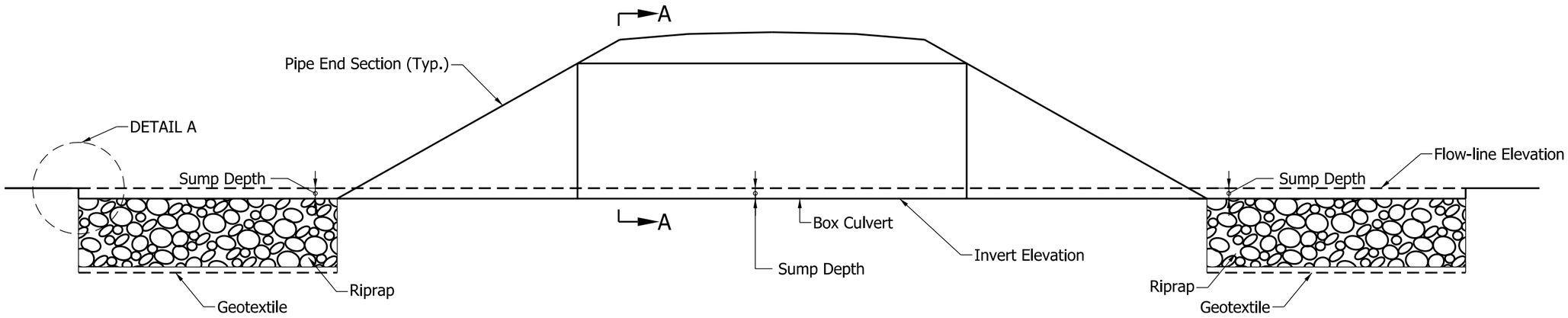

ELEVATION

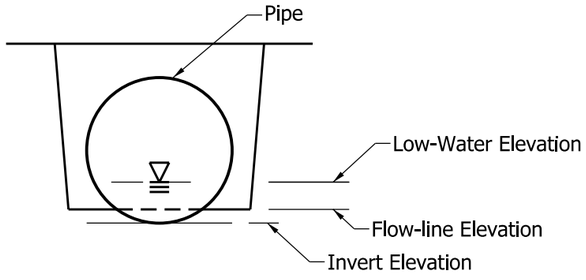

SECTION A-A

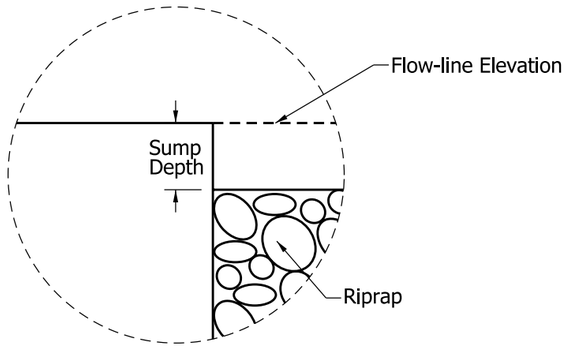

DETAIL A

INDIANA DEPARTMENT OF TRANSPORTATION

PIPE SUMPING
PROTECTION

SEPTEMBER 2011

STANDARD DRAWING NO. E 715-PCSP-01

RICHARD L. VanCLEAVE
REGISTERED
No. 9750
STATE OF INDIANA
PROFESSIONAL ENGINEER

DESIGN STANDARDS ENGINEER

/s/ Richard L.VanCleave *09/01/11*
DESIGN STANDARDS ENGINEER DATE

/s/ Mark A. Miller *09/01/11*
CHIEF HIGHWAY ENGINEER DATE

$2\frac{2}{3}$" x $\frac{1}{2}$" CORRUGATED ALUMINUM ALLOY PIPE (LOCK SEAM)
HEIGHT OF COVER LIMITS (ft.)

	AREA (sft)	DIAMETER (in.)	THICKNESS (in)										
			0.060		0.075		0.105		0.135		0.164		
			MIN.	MAX.	MIN.	MAX.	MIN.	MAX.	MIN.	MAX.	MIN.	MAX.	
	0.8	12	1.0	100.0	1.0	100.0	1.0	100.0					
	1.2	15	1.0	100.0	1.0	100.0	1.0	100.0					
	1.8	18	1.0	100.0	1.0	100.0	1.0	100.0					
	2.4	21	1.0	88.5	1.0	100.0	1.0	100.0					
	3.1	24	1.0	77.5	1.0	96.8	1.0	100.0	1.0	100.0			
	4.0	27	1.0	68.8	1.0	86.0	1.0	100.0	1.0	100.0			
	4.9	30	1.0	62.0	1.0	77.4	1.0	100.0	1.0	100.0			
	5.9	33			1.0	64.5	1.0	90.4	1.0	100.0			
	7.1	36			1.0	64.5	1.0	90.4	1.0	100.0			
	9.6	42					1.0	77.4	1.0	99.7			
	12.6	48					1.0	66.7	1.0	86.6	1.0	100.0	
	15.9	54					1.0	54.4	1.0	70.8	1.0	87.6	
	19.6	60							1.0	57.6	1.0	71.6	
	23.8	66									1.0	57.7	
	28.3	72									1.0	45.5	

NOTE:

1. The tabulated cover depths shall be measured from the bottom of the asphalt or concrete pavement to the top of the pipe.

INDIANA DEPARTMENT OF TRANSPORTATION

PIPE HEIGHT OF COVER LIMITS

JANUARY 1998

STANDARD DRAWING NO. **E 715-PHCL-01**

ANTHONY L. UREMOVICH REGISTERED No. 18095 STATE OF INDIANA PROFESSIONAL ENGINEER

DESIGN STANDARDS ENGINEER

DETAILS PLACED IN THIS FORMAT 11-15-99

/s/ Anthony L. Uremovich 11-15-99
DESIGN STANDARDS ENGINEER DATE

/s/ Firooz Zandi 11-15-99
CHIEF HIGHWAY ENGINEER DATE

ORIGINALLY APPROVED 1-02-98

$2\frac{2}{3}$" x $\frac{1}{2}$" CORRUGATED ALUMINUM ALLOY PIPE (RIVETED)
HEIGHT OF COVER LIMITS (ft.)

	AREA (sft)	DIAMETER (in.)	THICKNESS (in.)										
			0.060		0.075		0.105		0.135		0.164		
			MIN.	MAX.	MIN.	MAX.	MIN.	MAX.	MIN.	MAX.	MIN.	MAX.	
	0.8	12	1.0	50.0	1.0	50.0	1.0	86.6					
	1.2	15	1.0	40.0	1.0	40.0	1.0	69.3					
	1.8	18	1.0	33.3	1.0	33.3	1.0	57.7					
	2.4	21	1.0	28.5	1.0	28.5	1.0	49.5					
	3.1	24	1.0	25.0	1.0	25.0	1.0	43.3	1.0	45.0			
	4.0	27	1.0	22.2	1.0	22.2	1.0	38.5	1.0	40.0			
	4.9	30	1.1	20.0	1.1	20.0	1.0	34.6	1.0	36.0			
	5.9	33			1.2	16.6	1.0	28.8	1.0	30.0			
	7.1	36			1.2	16.6	1.0	28.8	1.0	30.0			
	9.6	42					1.0	50.0	1.0	52.3			
	12.6	48					1.0	43.7	1.0	45.8	1.0	47.2	
	15.9	54					1.0	38.8	1.0	40.7	1.0	41.9	
	19.6	60							1.0	36.6	1.0	37.7	
	23.8	66									1.0	34.3	
	28.3	72									1.0	31.4	

NOTE:

1. The tabulated cover depths shall be measured from the bottom of the asphalt or concrete pavement to the top of the pipe.

INDIANA DEPARTMENT OF TRANSPORTATION

PIPE HEIGHT OF COVER LIMITS

JANUARY 1998

STANDARD DRAWING NO. **E 715-PHCL-02**

ANTHONY L. UREMOVICH REGISTERED No. 18095 STATE OF INDIANA PROFESSIONAL ENGINEER

DESIGN STANDARDS ENGINEER

DETAILS PLACED IN THIS FORMAT 11-15-99

/s/ Anthony L. Uremovich 11-15-99
DESIGN STANDARDS ENGINEER DATE

/s/ Firooz Zandi 11-15-99
CHIEF HIGHWAY ENGINEER DATE

ORIGINALLY APPROVED 1-02-98

$2\frac{2}{3}$" x $\frac{1}{2}$" CORRUGATED ALUMINUM ALLOY PIPE-ARCH (RIVETED OR LOCK SEAM)
HEIGHT OF COVER LIMITS (ft.)

CORNER RADIUS (in.)	SPAN (in.)	RISE (in.)	AREA (sft)	THICKNESS (in.)									
				0.060		0.075		0.105		0.135		0.164	
				MIN.	MAX.	MIN.	MAX.	MIN.	MAX.	MIN.	MAX.	MIN.	MAX.
$3/3\frac{1}{2}$	17	13	1.1	1.5	13.7	1.5	13.7	1.5	13.7				
$3/4\frac{1}{8}$	21	15	1.6	1.6	13.0	1.6	13.0	1.6	13.0				
$3/4\frac{7}{8}$	24	18	2.2	1.5	13.5	1.5	13.5	1.5	13.5				
$3/5\frac{1}{2}$	28	20	2.9	1.6	13.0	1.6	13.0	1.6	13.0	1.6	13.0		
$3/6\frac{7}{8}$	35	24	4.5			1.6	13.0	1.6	13.0	1.6	13.0		
$3\frac{1}{2}/8\frac{1}{4}$	42	29	6.5			1.6	13.0	1.6	13.0	1.6	13.0		
$4/9\frac{5}{8}$	49	33	8.9			1.6	13.0	1.6	13.0	1.6	13.0		
5/11	57	38	11.6					1.6	12.8	1.6	12.8	1.6	12.8
$6/12\frac{3}{8}$	64	43	14.7							1.6	12.8	1.6	12.8
$7/13\frac{3}{4}$	71	47	18.1									1.6	12.9

NOTE:

1. The tabulated cover depths shall be measured from the bottom of the asphalt or concrete pavement to the top of the pipe.

2. Dual entries in the "Corner Radius" column, such as $3/3\frac{1}{2}$, represent the following:
   3 - minimum corner radius allowed by AASHTO M 196.
   $3\frac{1}{2}$ - corner radius typically available.

3. The tabulated cover heights reflect pipe-arches with typically available corner radii. If a pipe-arch with corner radii other than what is typically available is to be used, a specific design shall be performed to verify structural adequacy.

INDIANA DEPARTMENT OF TRANSPORTATION

PIPE HEIGHT OF COVER LIMITS

JANUARY 1998

STANDARD DRAWING NO. **E 715-PHCL-03**

ANTHONY L. UREMOVICH REGISTERED No. 18095 STATE OF INDIANA PROFESSIONAL ENGINEER

DESIGN STANDARDS ENGINEER

DETAILS PLACED IN THIS FORMAT 11-15-99

/s/ Anthony L. Uremovich 11-15-99
DESIGN STANDARDS ENGINEER DATE

/s/ Firooz Zandi 11-15-99
CHIEF HIGHWAY ENGINEER DATE

ORIGINALLY APPROVED 1-02-98

NOTE:

1. The tabulated cover depths shall be measured from the bottom of the asphalt or concrete pavement to the top of the pipe.

3" x 1" CORRUGATED ALUMINUM ALLOY PIPE (LOCK SEAM)
HEIGHT OF COVER LIMITS (ft.)

AREA (sft)	DIAMETER (in.)	THICKNESS (in.)									
		0.060		0.075		0.105		0.135		0.164	
		MIN.	MAX.	MIN.	MAX.	MIN.	MAX.	MIN.	MAX.	MIN.	MAX.
4.9	30	1.0	71.2	1.0	89.4	1.0	100.0	1.0	100.0		
5.9	33	1.0	59.3	1.0	74.5	1.0	100.0	1.0	100.0		
7.1	36	1.0	59.3	1.0	74.5	1.0	100.0	1.0	100.0		
9.6	42	1.0	50.8	1.0	63.8	1.0	89.1	1.0	100.0		
12.6	48	1.0	44.5	1.0	55.9	1.0	78.0	1.0	100.0	1.0	100.0
15.9	54	1.0	39.5	1.0	49.6	1.0	69.3	1.0	92.8	1.0	90.7
19.6	60	1.0	35.6	1.0	44.7	1.0	62.4	1.0	83.5	1.0	81.6
23.8	66	1.0	32.3	1.0	40.6	1.0	56.7	1.0	75.9	1.0	74.2
28.3	72			1.0	37.2	1.0	52.0	1.0	69.6	1.0	68.0
33.2	78			1.0	34.4	1.0	48.0	1.0	64.2	1.0	62.8
38.5	84					1.0	44.5	1.0	59.6	1.0	58.3
44.2	90					1.0	41.6	1.0	55.6	1.0	54.4
50.3	96					1.0	38.1	1.0	51.3	1.0	51.0
56.7	102							1.1	46.3	1.1	48.0
63.6	108							1.1	41.8	1.1	45.3
70.9	114									1.2	42.9
78.5	120									1.3	40.1

INDIANA DEPARTMENT OF TRANSPORTATION

PIPE HEIGHT OF
COVER LIMITS

STANDARD DRAWING NO. E 715-PHCL-04

ANTHONY L. UREMOVICH REGISTERED No. 18095 STATE OF INDIANA PROFESSIONAL ENGINEER

DESIGN STANDARDS ENGINEER

JANUARY 1998

DETAILS PLACED IN THIS FORMAT ON 11/15/99

/s/ Anthony L. Uremovich 11/15/99

DESIGN STANDARDS ENGINEER DATE

/s/ Firooz Zandi 11/15/99

CHIEF HIGHWAY ENGINEER DATE

ORIGINALLY APPROVED 1/02/98

3" x 1" CORRUGATED ALUMINUM ALLOY PIPE (RIVETED)
HEIGHT OF COVER LIMITS (ft.)

	AREA (sft)	DIAMETER (in.)	THICKNESS (in.)										
			0.060		0.075		0.105		0.135		0.164		
			MIN.	MAX.	MIN.	MAX.	MIN.	MAX.	MIN.	MAX.	MIN.	MAX.	
	4.9	30	1.0	36.6	1.0	45.5	1.0	62.2	1.0	93.3			
	5.9	33	1.0	30.5	1.0	37.9	1.0	51.8	1.0	77.7			
	7.1	36	1.0	30.5	1.0	37.9	1.0	51.8	1.0	77.7			
	9.6	42	1.0	26.1	1.0	32.5	1.0	44.4	1.0	66.6			
	12.6	48	1.0	22.9	1.0	28.4	1.0	38.8	1.0	58.3	1.0	75.6	
	15.9	54	1.1	20.3	1.0	25.3	1.0	34.5	1.0	51.8	1.0	67.2	
	19.6	60	1.1	18.3	1.0	22.7	1.0	31.1	1.0	46.6	1.0	60.5	
	23.8	66	1.2	16.6	1.1	20.7	1.0	28.2	1.0	42.4	1.0	55.0	
	28.3	72			1.1	18.9	1.0	25.9	1.0	38.8	1.0	50.4	
	33.2	78			1.2	17.5	1.0	23.9	1.0	35.8	1.0	46.5	
	38.5	84					1.0	22.2	1.0	33.3	1.0	43.2	
	44.2	90					1.1	20.7	1.0	31.1	1.0	40.3	
	50.3	96					1.1	19.4	1.0	29.1	1.0	37.8	
	56.7	102							1.1	27.4	1.1	35.6	
	63.6	108							1.1	25.9	1.1	33.6	
	70.9	114									1.2	31.8	
	78.5	120									1.3	30.2	

NOTE:

1. The tabulated cover depths shall be measured from the bottom of the asphalt or concrete pavement to the top of the pipe.

INDIANA DEPARTMENT OF TRANSPORTATION

PIPE HEIGHT OF COVER LIMITS

JANUARY 1998

STANDARD DRAWING NO. **E 715-PHCL-05**

ANTHONY L. UREMOVICH REGISTERED No. 18095 STATE OF INDIANA PROFESSIONAL ENGINEER

DESIGN STANDARDS ENGINEER

DETAILS PLACED IN THIS FORMAT 11-15-99

/s/ Anthony L. Uremovich 11-15-99
DESIGN STANDARDS ENGINEER DATE

/s/ Firooz Zandi 11-15-99
CHIEF HIGHWAY ENGINEER DATE

ORIGINALLY APPROVED 1-02-98

3" x 1" CORRUGATED ALUMINUM ALLOY PIPE-ARCH (RIVETED OR LOCK SEAM)
HEIGHT OF COVER LIMITS (ft.)

CORNER RADIUS (in.)	SPAN (in.)	RISE (in.)	AREA (sft)	THICKNESS (in.)									
				0.060		0.075		0.105		0.135		0.164	
				MIN.	MAX.	MIN.	MAX.	MIN.	MAX.	MIN.	MAX.	MIN.	MAX.
$8/18\frac{3}{4}$	60	46	15.6			1.1	20.8	1.1	20.8	1.1	20.8	1.1	20.8
$9/20\frac{3}{4}$	66	51	19.3			1.1	20.9	1.1	20.9	1.1	20.9	1.1	20.9
$12/22\frac{7}{8}$	73	55	23.2			1.1	20.8	1.1	20.8	1.1	20.8	1.1	20.8
$14/20\frac{7}{8}$	81	59	27.4					1.2	17.1	1.2	17.1	1.2	17.1
$14/22\frac{5}{8}$	87	63	32.1					1.2	17.3	1.2	17.3	1.2	17.3
$16/24\frac{3}{8}$	95	67	37.0							1.2	17.1	1.2	17.1
$16/26\frac{1}{8}$	103	71	42.4							1.2	16.9	1.2	16.9
$18/27\frac{3}{4}$	112	75	48.0									1.3	16.5

NOTE:

1. The tabulated cover depths shall be measured from the bottom of the asphalt or concrete pavement to the top of the pipe.

2. Dual entries in the "Corner Radius" column, such as $8/18\frac{3}{4}$ represent the following:
   8 - minimum corner radius allowed by AASHTO M 196.
   $18\frac{3}{4}$ - corner radius typically available.

3. The tabulated cover heights reflect pipe-arches with typically available corner radii. If a pipe-arch with corner radii other than what is typically available is to be used, a specific design shall be performed to verify structural adequacy.

INDIANA DEPARTMENT OF TRANSPORTATION

PIPE HEIGHT OF COVER LIMITS

JANUARY 1998

STANDARD DRAWING NO. **E 715-PHCL-06**

ANTHONY L. UREMOVICH REGISTERED No. 18095 STATE OF INDIANA PROFESSIONAL ENGINEER

DESIGN STANDARDS ENGINEER

DETAILS PLACED IN THIS FORMAT 11-15-99

/s/ Anthony L. Uremovich 11-15-99
DESIGN STANDARDS ENGINEER DATE

/s/ Firooz Zandi 11-15-99
CHIEF HIGHWAY ENGINEER DATE

ORIGINALLY APPROVED 1-02-98

6" x 1" CORRUGATED ALUMINUM ALLOY PIPE (LOCK SEAM)
HEIGHT OF COVER LIMITS (ft.)

	AREA (sft)	DIAMETER (in.)	THICKNESS (in.)										
			0.060		0.075		0.105		0.135		0.164		
			MIN.	MAX.	MIN.	MAX.	MIN.	MAX.	MIN.	MAX.	MIN.	MAX.	
	12.6	48	1.0	38.7	1.0	48.4	1.0	67.8	1.0	87.2	1.0	100.0	
	15.9	54	1.0	34.4	1.0	43.0	1.0	60.2	1.0	77.5	1.0	94.8	
	19.6	60	1.0	31.0	1.0	38.7	1.0	54.2	1.0	69.7	1.0	85.3	
	23.8	66	1.0	28.1	1.0	35.2	1.0	49.3	1.0	63.4	1.0	77.5	
	28.3	72			1.0	32.2	1.0	45.2	1.0	58.1	1.0	71.1	
	33.2	78			1.0	29.7	1.0	41.7	1.0	53.6	1.0	65.6	
	38.5	84					1.0	38.7	1.0	49.8	1.0	60.9	
	44.2	90					1.0	36.1	1.0	46.5	1.0	56.8	
	50.3	96							1.0	43.6	1.0	53.3	
	56.7	102							1.1	40.0	1.1	49.0	
	63.6	108									1.1	44.5	
	70.9	114									1.2	40.3	

NOTE:

1. The tabulated cover depths shall be measured from the bottom of the asphalt or concrete pavement to the top of the pipe.

INDIANA DEPARTMENT OF TRANSPORTATION

PIPE HEIGHT OF COVER LIMITS

JANUARY 1998

STANDARD DRAWING NO. **E 715-PHCL-07**

ANTHONY L. UREMOVICH REGISTERED No. 18095 STATE OF INDIANA PROFESSIONAL ENGINEER

DESIGN STANDARDS ENGINEER

DETAILS PLACED IN THIS FORMAT 11-15-99

/s/ Anthony L. Uremovich 11-15-99
DESIGN STANDARDS ENGINEER DATE

/s/ Firooz Zandi 11-15-99
CHIEF HIGHWAY ENGINEER DATE

ORIGINALLY APPROVED 1-02-98

6" x 1" CORRUGATED ALUMINUM ALLOY PIPE (RIVETED)
HEIGHT OF COVER LIMITS (ft.)

	AREA (sft)	DIAMETER (in.)	THICKNESS (in.)										
			0.060		0.075		0.105		0.135		0.164		
			MIN.	MAX.	MIN.	MAX.	MIN.	MAX.	MIN.	MAX.	MIN.	MAX.	
	12.6	48	1.0	22.2	1.0	26.3	1.0	38.7	1.0	49.8	1.0	60.4	
	15.9	54	1.1	19.7	1.0	23.4	1.0	34.4	1.0	44.3	1.0	53.7	
	19.6	60	1.2	17.7	1.1	21.1	1.0	31.0	1.0	39.8	1.0	48.3	
	23.8	66	1.3	16.1	1.1	19.1	1.0	28.1	1.0	36.2	1.0	43.9	
	28.3	72			1.2	17.5	1.0	25.8	1.0	33.2	1.0	40.2	
	33.2	78			1.3	16.2	1.0	23.8	1.0	30.6	1.0	37.1	
	38.5	84					1.0	22.1	1.0	28.4	1.0	34.5	
	44.2	90					1.1	20.6	1.0	26.5	1.0	32.2	
	50.3	96							1.0	24.9	1.0	30.2	
	56.7	102							1.1	23.4	1.1	28.4	
	63.6	108									1.1	26.8	
	70.9	114									1.2	25.4	

NOTE:

1. The tabulated cover depths shall be measured from the bottom of the asphalt or concrete pavement to the top of the pipe.

INDIANA DEPARTMENT OF TRANSPORTATION

PIPE HEIGHT OF COVER LIMITS

JANUARY 1998

STANDARD DRAWING NO. **E 715-PHCL-08**

ANTHONY L. UREMOVICH REGISTERED No. 18095 STATE OF INDIANA PROFESSIONAL ENGINEER

DESIGN STANDARDS ENGINEER

DETAILS PLACED IN THIS FORMAT 11-15-99

/s/ Anthony L. Uremovich 11-15-99
DESIGN STANDARDS ENGINEER DATE

/s/ Firooz Zandi 11-15-99
CHIEF HIGHWAY ENGINEER DATE

ORIGINALLY APPROVED 1-02-98

$2\frac{2}{3}$" x $\frac{1}{2}$" CORRUGATED STEEL PIPE (LOCK SEAM)
HEIGHT OF COVER LIMITS (ft.)

	AREA (sft)	DIAMETER (in.)	THICKNESS (in.)									
			0.064		0.079		0.109		0.138		0.168	
			MIN.	MAX.	MIN.	MAX.	MIN.	MAX.	MIN.	MAX.	MIN.	MAX.
	0.8	12	1.0	100.0	1.0	100.0						
	1.2	15	1.0	100.0	1.0	100.0	1.0	100.0				
	1.8	18	1.0	100.0	1.0	100.0	1.0	100.0				
	2.4	21	1.0	100.0	1.0	100.0	1.0	100.0				
	3.1	24	1.0	100.0	1.0	100.0	1.0	100.0				
	4.0	27	1.0	94.7	1.0	100.0	1.0	100.0				
	4.9	30	1.0	85.2	1.0	100.0	1.0	100.0	1.0	100.0		
	5.9	33	1.0	71.0	1.0	88.7	1.0	100.0	1.0	100.0		
	7.1	36	1.0	71.0	1.0	88.7	1.0	100.0	1.0	100.0	1.0	100.0
	9.6	42	1.0	60.8	1.0	76.0	1.0	100.0	1.0	100.0	1.0	100.0
	12.6	48	1.0	53.2	1.0	66.5	1.0	93.2	1.0	100.0	1.0	100.0
	15.9	54			1.0	59.1	1.0	82.8	1.0	100.0	1.0	100.0
	19.6	60					1.0	87.8	1.0	95.9	1.0	100.0
	23.8	66							1.0	87.2	1.0	100.0
	28.3	72							1.0	79.9	1.0	97.7
	33.2	78									1.0	86.7
	38.5	84									1.0	75.1

NOTE:

1. The tabulated cover depths shall be measured from the bottom of the asphalt or concrete pavement to the top of the pipe.

INDIANA DEPARTMENT OF TRANSPORTATION

PIPE HEIGHT OF COVER LIMITS

JANUARY 1998

STANDARD DRAWING NO. **E 715-PHCL-09**

ANTHONY L. UREMOVICH REGISTERED No. 18095 STATE OF INDIANA PROFESSIONAL ENGINEER

DESIGN STANDARDS ENGINEER

DETAILS PLACED IN THIS FORMAT 11-15-99

/s/ Anthony L. Uremovich 11-15-99
DESIGN STANDARDS ENGINEER DATE

/s/ Firooz Zandi 11-15-99
CHIEF HIGHWAY ENGINEER DATE

ORIGINALLY APPROVED 1-02-98

$2\frac{2}{3}''$ x $\frac{1}{2}''$ CORRUGATED STEEL PIPE (RIVETED)
HEIGHT OF COVER LIMITS (ft.)

	AREA (sft)	DIAMETER (in.)	THICKNESS (in.)										
			0.064		0.079		0.109		0.138		0.168		
			MIN.	MAX.	MIN.	MAX.	MIN.	MAX.	MIN.	MAX.	MIN.	MAX.	
	0.8	12	1.0	92.7	1.0	100.0							
	1.2	15	1.0	74.2	1.0	80.8	1.0	100.0					
	1.8	18	1.0	61.8	1.0	67.4	1.0	86.6					
	2.4	21	1.0	53.0	1.0	57.7	1.0	74.2					
	3.1	24	1.0	46.3	1.0	50.5	1.0	65.0					
	4.0	27	1.0	41.2	1.0	44.9	1.0	57.7					
	4.9	30	1.0	37.1	1.0	40.4	1.0	52.0	1.0	54.4			
	5.9	33	1.0	30.9	1.0	33.7	1.0	43.3	1.0	45.3			
	7.1	36	1.0	30.9	1.0	33.7	1.0	43.3	1.0	45.3	1.0	47.4	
	9.6	42	1.0	34.2	1.0	47.3	1.0	74.2	1.0	77.7	1.0	81.4	
	12.6	48	1.0	30.0	1.0	41.3	1.0	65.0	1.0	68.0	1.0	71.2	
	15.9	54			1.0	36.7	1.0	57.7	1.0	60.4	1.0	63.3	
	19.6	60					1.0	52.0	1.0	54.4	1.0	57.0	
	23.8	66							1.0	49.4	1.0	51.8	
	28.3	72							1.0	45.3	1.0	47.5	
	33.2	78									1.0	43.8	
	38.5	84									1.0	40.7	

NOTE:

1. The tabulated cover depths shall be measured from the bottom of the asphalt or concrete pavement to the top of the pipe.

INDIANA DEPARTMENT OF TRANSPORTATION

PIPE HEIGHT OF COVER LIMITS

JANUARY 1998

STANDARD DRAWING NO. **E 715-PHCL-10**

ANTHONY L. UREMOVICH REGISTERED No. 18095 STATE OF INDIANA PROFESSIONAL ENGINEER

DESIGN STANDARDS ENGINEER

DETAILS PLACED IN THIS FORMAT 11-15-99

/s/ Anthony L. Uremovich 11-15-99
DESIGN STANDARDS ENGINEER DATE

/s/ Firooz Zandi 11-15-99
CHIEF HIGHWAY ENGINEER DATE

ORIGINALLY APPROVED 1-02-98

$2\frac{2}{3}$" x $\frac{1}{2}$" CORRUGATED STEEL PIPE-ARCH (RIVETED OR LOCK SEAM)
HEIGHT OF COVER LIMITS (ft.)

Rc (in.)	SPAN (in.)	RISE (in.)	AREA (sft)	THICKNESS (in.)									
				0.064		0.079		0.109		0.138		0.168	
				MIN.	MAX.	MIN.	MAX.	MIN.	MAX.	MIN.	MAX.	MIN.	MAX.
$3/3\frac{1}{2}$	17	13	1.1	1.5	13.7	1.5	13.7	1.5	13.7				
$3/4\frac{1}{8}$	21	15	1.6	1.6	13.0	1.6	13.0	1.6	13.0				
$3/4\frac{7}{8}$	24	18	2.2	1.5	13.5	1.5	13.5	1.5	13.5				
$3/5\frac{1}{2}$	28	20	2.9	1.6	13.0	1.6	13.0	1.6	13.0				
$3/6\frac{7}{8}$	35	24	4.5	1.6	13.0	1.6	13.0	1.6	13.0	1.6	13.0		
$3\frac{1}{2}/8\frac{1}{4}$	42	29	6.5	1.6	13.0	1.6	13.0	1.6	13.0	1.6	13.0	1.6	13.0
$4/9\frac{5}{8}$	49	33	8.9			1.6	13.0	1.6	13.0	1.6	13.0	1.6	13.0
5/11	57	38	11.6					1.6	12.8	1.6	12.8	1.6	12.8
$6/12\frac{3}{8}$	64	43	14.7					1.6	12.8	1.6	12.8	1.6	12.8
$7/13\frac{3}{4}$	71	47	18.1							1.6	12.9	1.6	12.9
$8/15\frac{1}{8}$	77	52	21.9									1.6	13.0
$9/16\frac{1}{2}$	83	57	26.0									1.5	13.2

NOTE:

1. The tabulated cover depths shall be measured from the bottom of the asphalt or concrete pavement to the top of the pipe.

2. Dual entries in the "Corner Radius" column, such as $3/3\frac{1}{2}$, represent the following:
   3 – minimum corner radius allowed by AASHTO M 36.
   $3\frac{1}{2}$– corner radius typically available.

3. The tabulated cover heights reflect pipe-arches with typically available corner radii. If a pipe-arch with corner radii other than what is typically available is to be used, a specific design shall be performed to verify structural adequacy.

INDIANA DEPARTMENT OF TRANSPORTATION

PIPE HEIGHT OF COVER LIMITS

JANUARY 1998

STANDARD DRAWING NO. **E 715-PHCL-11**

ANTHONY L. UREMOVICH REGISTERED No. 18095 STATE OF INDIANA PROFESSIONAL ENGINEER

DESIGN STANDARDS ENGINEER

DETAILS PLACED IN THIS FORMAT 11-15-99

/s/ Anthony L. Uremovich 11-15-99
DESIGN STANDARDS ENGINEER DATE

/s/ Firooz Zandi 11-15-99
CHIEF HIGHWAY ENGINEER DATE

ORIGINALLY APPROVED 1-02-98

3" x 1" CORRUGATED STEEL PIPE (LOCK SEAM)
HEIGHT OF COVER LIMITS (ft.)

	AREA (sft)	DIAMETER (in.)	THICKNESS (in.)									
			0.064		0.079		0.109		0.138		0.168	
			MIN.	MAX.	MIN.	MAX.	MIN.	MAX.	MIN.	MAX.	MIN.	MAX.
	7.1	36	1.0	81.5								
	9.6	42	1.0	69.9	1.0	87.4	1.0	100.0	1.0	100.0		
	12.6	48	1.0	61.1	1.0	76.5	1.0	100.0	1.0	100.0		
	15.9	54	1.0	54.3	1.0	68.0	1.0	95.3	1.0	100.0	1.0	100.0
	19.6	60	1.0	48.9	1.0	61.2	1.0	85.8	1.0	100.0	1.0	100.0
	23.8	66	1.0	44.5	1.0	55.6	1.0	78.0	1.0	100.0	1.0	100.0
	28.3	72	1.0	40.7	1.0	51.0	1.0	71.5	1.0	92.0	1.0	100.0
	33.2	78	1.0	37.6	1.0	47.0	1.0	66.0	1.0	84.9	1.0	100.0
	38.5	84	1.0	34.9	1.0	43.7	1.0	61.2	1.0	78.8	1.0	96.5
	44.2	90	1.0	32.6	1.0	40.8	1.0	57.2	1.0	73.6	1.0	90.1
	50.3	96			1.0	38.2	1.0	53.6	1.0	69.0	1.0	84.4
	56.7	102			1.1	36.0	1.1	50.4	1.1	64.9	1.1	79.5
	63.6	108					1.1	47.6	1.1	61.3	1.1	75.1
	70.9	114					1.2	45.1	1.2	58.1	1.2	71.1
	78.5	120					1.3	42.9	1.3	55.2	1.3	67.5
	86.6	126							1.3	52.5	1.3	64.3
	95.0	132							1.4	50.2	1.4	61.4
	103.9	138							1.4	48.0	1.4	58.7
	113.1	144									1.5	56.3

NOTE:

1. The tabulated cover depths shall be measured from the bottom of the asphalt or concrete pavement to the top of the pipe.

INDIANA DEPARTMENT OF TRANSPORTATION

PIPE HEIGHT OF COVER LIMITS

JANUARY 1998

STANDARD DRAWING NO. **E 715-PHCL-12**

ANTHONY L. UREMOVICH REGISTERED No. 18095 STATE OF INDIANA PROFESSIONAL ENGINEER

DESIGN STANDARDS ENGINEER

DETAILS PLACED IN THIS FORMAT 11-15-99

/s/ Anthony L. Uremovich 11-15-99
DESIGN STANDARDS ENGINEER DATE

/s/ Firooz Zandi 11-15-99
CHIEF HIGHWAY ENGINEER DATE

ORIGINALLY APPROVED 1-02-98

3" x 1" CORRUGATED STEEL PIPE (RIVETED)
HEIGHT OF COVER LIMITS (ft.)

	AREA (sft)	DIAMETER (in.)	THICKNESS (in.)										
			0.064		0.079		0.109		0.138		0.168		
			MIN.	MAX.	MIN.	MAX.	MIN.	MAX.	MIN.	MAX.	MIN.	MAX.	
	7.1	36	1.0	53.1									
	9.6	42	1.0	45.5	1.0	56.6	1.0	84.1	1.0	100.0			
	12.6	48	1.0	39.8	1.0	49.5	1.0	73.6	1.0	88.4			
	15.9	54	1.0	35.4	1.0	44.0	1.0	65.4	1.0	78.6	1.0	87.2	
	19.6	60	1.0	31.8	1.0	39.6	1.0	58.8	1.0	70.7	1.0	78.5	
	23.8	66	1.0	28.9	1.0	36.0	1.0	53.5	1.0	64.3	1.0	71.4	
	28.3	72	1.0	26.5	1.0	33.0	1.0	49.0	1.0	58.9	1.0	65.4	
	33.2	78	1.0	24.5	1.0	30.5	1.0	45.2	1.0	54.4	1.0	60.4	
	38.5	84	1.0	22.7	1.0	28.3	1.0	42.0	1.0	50.5	1.0	56.1	
	44.2	90	1.1	21.2	1.0	26.4	1.0	39.2	1.0	47.1	1.0	52.3	
	50.3	96			1.0	24.7	1.0	36.8	1.0	44.2	1.0	49.0	
	56.7	102			1.1	23.3	1.1	34.6	1.1	41.6	1.1	46.2	
	63.6	108					1.1	32.7	1.1	39.3	1.1	43.6	
	70.9	114					1.2	30.9	1.2	37.2	1.2	41.3	
	78.5	120					1.3	29.4	1.3	35.3	1.3	39.2	
	86.6	126							1.3	33.7	1.3	37.4	
	95.0	132							1.4	32.1	1.4	35.7	
	103.9	138							1.4	30.7	1.4	34.1	
	113.1	144									1.5	32.7	

NOTE:

1. The tabulated cover depths shall be measured from the bottom of the asphalt or concrete pavement to the top of the pipe.

INDIANA DEPARTMENT OF TRANSPORTATION

PIPE HEIGHT OF COVER LIMITS

JANUARY 1998

STANDARD DRAWING NO. **E 715-PHCL-13**

ANTHONY L. UREMOVICH REGISTERED No. 18095 STATE OF INDIANA PROFESSIONAL ENGINEER

DESIGN STANDARDS ENGINEER

DETAILS PLACED IN THIS FORMAT 11-15-99

/s/ Anthony L. Uremovich 11-15-99
DESIGN STANDARDS ENGINEER DATE

/s/ Firooz Zandi 11-15-99
CHIEF HIGHWAY ENGINEER DATE

ORIGINALLY APPROVED 1-02-98

3" x 1" CORRUGATED STEEL PIPE-ARCH (RIVETED OR LOCK SEAM)
HEIGHT OF COVER LIMITS (ft.)

Rc (in.)	SPAN (in.)	RISE (in.)	AREA (sft)	THICKNESS (in.)									
				0.064		0.079		0.109		0.138		0.168	
				MIN.	MAX.	MIN.	MAX.	MIN.	MAX.	MIN.	MAX.	MIN.	MAX.
8/18 3/4	60	46	15.6			1.1	20.8	1.1	20.8	1.1	20.8	1.1	20.8
9/20 3/4	66	51	19.3			1.1	20.9	1.1	20.9	1.1	20.9	1.1	20.9
12/22 7/8	73	55	23.2			1.1	20.8	1.1	20.8	1.1	20.8	1.1	20.8
14/20 7/8	81	59	27.4			1.2	17.1	1.2	17.1	1.2	17.1	1.2	17.1
14/22 7/8	87	63	32.1			1.2	17.3	1.2	17.3	1.2	17.3	1.2	17.3
16/24 3/8	95	67	37.0			1.2	17.1	1.2	17.1	1.2	17.1	1.2	17.1
16/26 1/8	103	71	42.4					1.2	16.9	1.2	16.9	1.2	16.9
18/27 3/4	112	75	48.0					1.3	16.5	1.3	16.5	1.3	16.5
18/29 1/2	117	79	59.2					1.2	16.8	1.2	16.8	1.2	16.8
18/31 1/4	128	83	60.5							1.3	16.2	1.3	16.2
18/33	137	87	67.4							1.3	16.0	1.3	16.0
18/34 3/4	142	91	74.5									1.3	16.3

NOTE:

1. The tabulated cover depths shall be measured from the bottom of the asphalt or concrete pavement to the top of the pipe.

2. 2. Dual entries in the ,Corner Radius, column, such as 8/18 3/4, represent the following:
   8 - minimum corner radius allowed by AASHTO M 36.
   18 3/4 - corner radius typically available.

3. The tabulated cover heights reflect pipe-arches with typically available corner radii. If a pipe-arch with corner radii other than what is typically available is to be used, a specific design shall be performed to verify structural adequacy.

INDIANA DEPARTMENT OF TRANSPORTATION

PIPE HEIGHT OF COVER LIMITS

JANUARY 1998

STANDARD DRAWING NO. **E 715-PHCL-14**

ANTHONY L. UREMOVICH REGISTERED No. 18095 STATE OF INDIANA PROFESSIONAL ENGINEER

DESIGN STANDARDS ENGINEER

DETAILS PLACED IN THIS FORMAT 11-15-99

/s/ Anthony L. Uremovich 11-15-99
DESIGN STANDARDS ENGINEER DATE

/s/ Firooz Zandi 11-15-99
CHIEF HIGHWAY ENGINEER DATE

ORIGINALLY APPROVED 1-02-98

5" x 1" CORRUGATED STEEL PIPE (LOCK SEAM)
HEIGHT OF COVER LIMITS (ft.)

	AREA (sft)	DIAMETER (in.)	THICKNESS (in.)										
			0.064		0.079		0.109		0.138		0.168		
			MIN.	MAX.	MIN.	MAX.	MIN.	MAX.	MIN.	MAX.	MIN.	MAX.	
	7.1	36			1.0	90.9	1.0	100.0					
	9.6	42			1.0	77.9	1.0	100.0					
	12.6	48	1.0	54.5	1.0	68.2	1.0	95.5	1.0	100.0			
	15.9	54	1.0	48.5	1.0	60.6	1.0	84.9	1.0	100.0			
	19.6	60	1.0	43.6	1.0	54.5	1.0	76.4	1.0	98.3			
	23.8	66	1.0	39.7	1.0	49.6	1.0	69.5	1.0	89.4			
	28.3	72	1.0	36.3	1.0	45.4	1.0	63.7	1.0	81.9	1.0	100.0	
	33.2	78	1.0	33.5	1.0	41.9	1.0	58.8	1.0	75.6	1.0	92.4	
	38.5	84	1.0	31.1	1.0	38.9	1.0	54.6	1.0	70.2	1.0	85.8	
	44.2	90	1.0	29.1	1.0	36.3	1.0	50.9	1.0	65.5	1.0	80.1	
	50.3	96			1.0	34.1	1.0	47.7	1.0	61.4	1.0	75.1	
	56.7	102			1.1	32.0	1.1	44.9	1.1	57.8	1.1	70.7	
	63.6	108					1.1	42.4	1.1	54.6	1.1	66.7	
	70.9	114					1.2	40.2	1.2	51.7	1.2	63.2	
	78.5	120					1.3	38.2	1.3	49.1	1.3	60.1	
	86.6	126							1.3	46.8	1.3	57.2	
	95.0	132							1.4	44.7	1.4	54.6	
	103.9	138							1.4	42.7	1.4	52.2	
	113.1	144									1.5	50.0	

NOTE:

1. The tabulated cover depths shall be measured from the bottom of the asphalt or concrete pavement to the top of the pipe.

INDIANA DEPARTMENT OF TRANSPORTATION

PIPE HEIGHT OF COVER LIMITS

JANUARY 1998

STANDARD DRAWING NO. **E 715-PHCL-15**

ANTHONY L. UREMOVICH REGISTERED No. 18095 STATE OF INDIANA PROFESSIONAL ENGINEER

DESIGN STANDARDS ENGINEER

DETAILS PLACED IN THIS FORMAT 11-15-99

/s/ Anthony L. Uremovich 11-15-99
DESIGN STANDARDS ENGINEER DATE

/s/ Firooz Zandi 11-15-99
CHIEF HIGHWAY ENGINEER DATE

ORIGINALLY APPROVED 1-02-98

5" x 1" CORRUGATED STEEL PIPE-ARCH (LOCK SEAM)
HEIGHT OF COVER LIMITS (ft.)

Rc (in.)	SPAN (in.)	RISE (in.)	AREA (sft)	THICKNESS (in.)									
				0.064		0.079		0.109		0.138		0.168	
				MIN.	MAX.	MIN.	MAX.	MIN.	MAX.	MIN.	MAX.	MIN.	MAX.
8/18 3/4	60	46	15.6					1.1	20.8	1.1	20.8		
9/20 3/4	66	51	19.3					1.1	20.9	1.1	20.9		
12/22 7/8	73	55	23.2					1.1	20.8	1.1	20.8		
14/20 7/8	81	59	27.4					1.2	17.1	1.2	17.1	1.2	17.1
14/22 5/8	87	63	32.1					1.2	17.3	1.2	17.3	1.2	17.3
16/24 3/8	95	67	37.0					1.2	17.1	1.2	17.1	1.2	17.1
16/26 1/8	103	71	42.4					1.2	16.9	1.2	16.9	1.2	16.9
18/27 3/4	112	75	48.0					1.3	16.5	1.3	16.5	1.3	16.5
18/29 1/2	117	79	54.2					1.2	16.8	1.2	16.8	1.2	16.8
18/31 1/4	128	83	60.5							1.3	16.2	1.3	16.2
18/33	137	87	67.4							1.3	16.0	1.3	16.0
18/34 3/4	142	91	74.5									1.3	16.3

NOTES:

1. The tabulated cover depths shall be measured from the bottom of the asphalt or concrete pavement to the top of the pipe.

2. Dual entries in the "Corner Radius" column, such as 8/18 3/4, represent the following:
   8 - minimum corner raduis allowed by AASHTO M 36.
   18 3/4 - corner radius typically available.

3. The tabulated cover heights reflect pipe-arches with typically available corner radii. If a pipe-arch with corner radii other than what is typically available is to be used, a specific design shall be performed to verify structural adequacy.

INDIANA DEPARTMENT OF TRANSPORTATION

PIPE HEIGHT OF COVER LIMITS

JANUARY 1998

STANDARD DRAWING NO. **E 715-PHCL-16**

ANTHONY L. UREMOVICH REGISTERED No. 18095 STATE OF INDIANA PROFESSIONAL ENGINEER

DESIGN STANDARDS ENGINEER

DETAILS PLACED IN THIS FORMAT 11-15-99

/s/ Anthony L. Uremovich 11-15-99
DESIGN STANDARDS ENGINEER DATE

/s/ Firooz Zandi 11-15-99
CHIEF HIGHWAY ENGINEER DATE

ORIGINALLY APPROVED 1-02-98

NON-REINFORCED CONCRETE PIPE CLASS 3 HEIGHT OF COVER LIMITS (ft.)		
DIAMETER (in.)	MINIMUM (ft.)	MAXIMUM (ft.)
12	1.3	14.1
15	1.4	13.1
18	1.5	12.8
21	1.5	13.4
24	1.5	13.5
27	1.6	12.1
30	1.8	10.7
33	1.9	9.8
36	2.1	9.0

NOTE:

1. The tabulated cover depths shall be measured from the bottom of the asphalt or concrete pavement to the top of the pipe.

INDIANA DEPARTMENT OF TRANSPORTATION

PIPE HEIGHT OF COVER LIMITS

JANUARY 1998

STANDARD DRAWING NO. **E 715-PHCL-17**

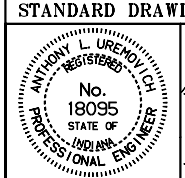

DESIGN STANDARDS ENGINEER

DETAILS PLACED IN THIS FORMAT 11-15-99

/s/ Anthony L. Uremovich 11-15-99
DESIGN STANDARDS ENGINEER DATE

/s/ Firooz Zandi 11-15-99
CHIEF HIGHWAY ENGINEER DATE

ORIGINALLY APPROVED 1-02-98

CORRUGATED POLYETHYLENE PIPE, TYPES HEIGHT OF COVER LIMITS (ft.)

PAY ITEM DIAMETER (in.)	NOMINAL DIAMETER (in.)	MINIMUM (ft.)	MAXIMUM (ft.)
12	12	2.0	11.0
15	15	2.0	11.0
18	18	2.0	11.0
21	21	2.0	11.0
24	24	2.0	11.0
30	30	2.0	11.0
36	36	2.0	11.0

RIBBED POLYETHYLENE PIPE HEIGHT OF COVER LIMITS (ft.)

PAY ITEM DIAMETER (in.)	NOMINAL DIAMETER (in.)	MINIMUM (ft.)	MAXIMUM (ft.)
18	18	2.0	18.0
21	21	2.0	22.0
24	24	2.0	21.0
27	27	2.0	24.0
30	30	2.0	22.0
33	33	2.0	23.0
36	36	2.0	25.0

SMOOTH WALL POLYETHYLENE PIPE HEIGHT OF COVER LIMITS (ft.)

PAY ITEM DIA. (in.)	NOMINAL DIA. (in.)	DIMENSION RATIO (NOM. DIA./WALL THICKNESS)							
		26		21		17		11	
		MIN.	MAX. (ft.)	MIN. (ft.)	MAX. (ft.)	MIN. (ft.)	MAX. (ft.)	MIN. (ft.)	MAX. (ft.)
12	13	2.0	40.0	2.0	57.0				
12	14					2.0	81.0		
15	18	2.0	40.0	2.0	57.0	2.0	81.0		
18	20	2.0	40.0	2.0	57.0	2.0	81.0		
18	22					2.0	81.0	2.0	100.0
21	24	2.0	40.0	2.0	57.0	2.0	81.0		
24	28	2.0	40.0	2.0	57.0	2.0	81.0		
27	32	2.0	40.0	2.0	57.0	2.0	81.0		
30	34	2.0	40.0	2.0	57.0	2.0	81.0		
36	42	2.0	40.0	2.0	57.0	2.0	81.0		

NOTE:

1. The tabulated cover depths shall be measured from the bottom of the asphalt or concrete pavement to the top of the pipe.
2. The pay item diameter reflects the minimum required inside diameter.
3. Because the nominal size of smooth wall polyethylene pipe is based on the outside diameter, different dimension ratios may require different nominal diameters to satisfy the pay item diameter requirements.

INDIANA DEPARTMENT OF TRANSPORTATION

PIPE HEIGHT OF COVER LIMITS

JANUARY 1998

STANDARD DRAWING NO. **E 715-PHCL-18**

ANTHONY L. UREMOVICH REGISTERED No. 18095 STATE OF INDIANA PROFESSIONAL ENGINEER

DESIGN STANDARDS ENGINEER

DETAILS PLACED IN THIS FORMAT 11-15-99

/s/ Anthony L. Uremovich 11-15-99
DESIGN STANDARDS ENGINEER DATE

/s/ Firooz Zandi 11-15-99
CHIEF HIGHWAY ENGINEER DATE

ORIGINALLY APPROVED 1-02-98

PROFILE WALL POLYVINYL CHLORIDE PIPE HEIGHT OF COVER LIMITS (ft.)		
DIAMETER (in.)	MINIMUM (ft.)	MAXIMUM (ft.)
12	2.0	35.3
15	2.0	34.2
18	2.0	34.0
21	2.0	33.0
24	2.0	31.0
27	2.0	30.0
30	2.0	29.0
36	2.0	27.0

SMOOTH WALL POLYVINYL CHLORIDE PIPE HEIGHT OF COVER LIMITS (ft.)			
PAY ITEM DIAMETER (in.)	NOMINAL DIAMETER (in.)	MINIMUM (ft.)	MAXIMUM (ft.)
12	12	2.0	64.0
15	15	2.0	64.0
18	18	2.0	61.0
21	21	2.0	61.0
24	24	2.0	61.0
27	27	2.0	61.0

NOTE:

1. The tabulated cover depths shall be measured from the bottom of the concrete or asphalt pavement to the top of the pipe.

2. The pay item diameter reflects the minimum required inside diameter.

INDIANA DEPARTMENT OF TRANSPORTATION

PIPE HEIGHT OF COVER LIMITS

MAY 1999

STANDARD DRAWING NO. **E 715-PHCL-19**

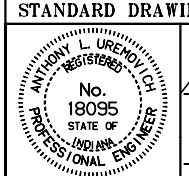

DESIGN STANDARDS ENGINEER

DETAILS PLACED IN THIS FORMAT 11-15-99

/s/ Anthony L. Uremovich 11-15-99
DESIGN STANDARDS ENGINEER DATE

/s/ Firooz Zandi 11-15-99
CHIEF HIGHWAY ENGINEER DATE

ORIGINALLY APPROVED 5-03-99

VITRIFIED CLAY PIPE, EXTRA STRENGTH HEIGHT OF COVER LIMITS (ft.)		
DIAMETER (in)	MINIMUM (ft.)	MAXIMUM (ft.)
12	1.2	16.0
15	1.4	14.0
18	1.4	13.0
21	1.4	14.0
24	1.4	15.0
27	1.5	14.0
30	1.6	13.0
33	1.5	13.0
36	1.5	14.0

NOTE:

1. The tabulated cover depths shall be measured from the bottom of the asphalt or concrete pavement to the top of the pipe.

INDIANA DEPARTMENT OF TRANSPORTATION

PIPE HEIGHT OF COVER LIMITS

JANUARY 1998

STANDARD DRAWING NO. **E 715-PHCL-20**

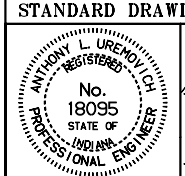

DESIGN STANDARDS ENGINEER

DETAILS PLACED IN THIS FORMAT 11-15-99

/s/ Anthony L. Uremovich 11-15-99
DESIGN STANDARDS ENGINEER DATE

/s/ Firooz Zandi 11-15-99
CHIEF HIGHWAY ENGINEER DATE

ORIGINALLY APPROVED 1-02-98

REINFORCED CONCRETE CIRCULAR PIPE
HEIGHT OF COVER LIMITS (ft.)

DIAMETER (in.)	Strength Class/D-load Rating											
	Class II: $D_{0.01}$ = 1000		Class III: $D_{0.01}$ = 1250		Class III: $D_{0.01}$ = 1350		Class IV: $D_{0.01}$ = 1500		Class IV: $D_{0.01}$ = 1750		Class IV: $D_{0.01}$ = 2000	
	MIN.	MAX.	MIN.	MAX.	MIN.	MAX.	MIN.	MAX.	MIN.	MAX.	MIN.	MAX.
12	1.4	6.0	1.1	10.0	1.1	12.0	1.0	15.0	1.0	24.0	1.0	100.0
15	1.1	8.0	1.0	12.0	1.0	14.0	1.0	19.0	1.0	35.0	1.0	100.0
18	1.0	9.0	1.0	14.0	1.0	17.0	1.0	22.0	1.0	52.0	1.0	100.0
21	1.0	10.0	1.0	15.0	1.0	18.0	1.0	24.0	1.0	84.0	1.0	100.0
24	1.0	11.0	1.0	17.0	1.0	20.0	1.0	26.0	1.0	85.0	1.0	100.0
27	1.0	10.0	1.0	13.0	1.0	15.0	1.0	19.0	1.0	26.0	1.0	42.0
30	1.0	10.0	1.0	14.0	1.0	16.0	1.0	20.0	1.0	28.0	1.0	44.0
33	1.0	10.0	1.0	15.0	1.0	17.0	1.0	20.0	1.0	29.0	1.0	45.0
36	1.0	11.0	1.0	15.0	1.0	17.0	1.0	21.0	1.0	29.0	1.0	45.0
42	1.0	11.0	1.0	16.0	1.0	18.0	1.0	22.0	1.0	30.0	1.0	44.0
48	1.0	12.0	1.0	17.0	1.0	19.0	1.0	22.0	1.0	30.0	1.0	43.0
54	1.0	12.0	1.0	17.0	1.0	19.0	1.0	23.0	1.0	31.0	1.0	42.0
60	1.0	10.0	1.0	13.0	1.0	14.0	1.0	17.0	1.0	21.0	1.0	26.0
66	1.0	10.0	1.0	14.0	1.0	15.0	1.0	17.0	1.0	21.0	1.0	26.0
72	1.0	11.0	1.0	14.0	1.0	15.0	1.0	18.0	1.0	22.0	1.0	27.0
78	1.0	11.0	1.0	14.0	1.0	16.0	1.0	18.0	1.0	22.0	1.0	27.0
84	1.0	11.0	1.0	15.0	1.0	16.0	1.0	19.0	1.0	23.0	1.0	28.0
90	1.0	11.0	1.0	15.0	1.0	16.0	1.0	19.0	1.0	23.0	1.0	28.0
96	1.0	11.0	1.0	15.0	1.0	17.0	1.0	19.0	1.0	23.0	1.0	28.0
102	1.1	12.0	1.1	15.0	1.1	17.0	1.1	19.0	1.1	24.0	1.1	29.0
108	1.2	12.0	1.2	15.0	1.2	17.0	1.2	20.0	1.2	24.0	1.2	29.0
114	1.2	12.0	1.2	16.0	1.2	17.0	1.2	20.0	1.2	24.0	1.2	29.0
120	1.3	12.0	1.3	16.0	1.3	17.0	1.3	20.0	1.3	24.0	1.3	29.0
126	1.4	12.0	1.4	16.0	1.4	18.0	1.4	20.0	1.4	24.0	1.4	29.0
132	1.4	12.0	1.4	16.0	1.4	18.0	1.4	20.0	1.4	25.0	1.4	29.0
138	1.5	12.0	1.5	16.0	1.5	18.0	1.5	20.0	1.5	25.0	1.5	29.0
144	1.5	12.0	1.5	16.0	1.5	18.0	1.5	20.0	1.5	25.0	1.5	29.0

NOTE:

1. The tabulated cover depths shall be measured from the bottom of the bituminous or concrete pavement to the top of the pipe.

INDIANA DEPARTMENT OF TRANSPORTATION

PIPE HEIGHT OF COVER LIMITS

SEPTEMBER 2009

STANDARD DRAWING NO. E 715-PHCL-21

RICHARD L. VanCLEAVE REGISTERED No. 9750 STATE OF INDIANA PROFESSIONAL ENGINEER

DESIGN STANDARDS ENGINEER

/s/ Richard L. VanCleave 09/01/09
DESIGN STANDARDS ENGINEER DATE

/s/ Mark A. Miller 09/01/09
CHIEF HIGHWAY ENGINEER DATE

REINFORCED CONCRETE CIRCULAR PIPE
HEIGHT OF COVER LIMITS (ft.)

DIAMETER (in.)	Strength Class/D-load Rating									
	Class V: $D_{0.01}$ = 2250		Class V: $D_{0.01}$ = 2500		Class V: $D_{0.01}$ = 2750		Class V: $D_{0.01}$ = 3000		Class Special: $D_{0.01}$ = 3250	
	MIN.	MAX.	MIN.	MAX.	MIN.	MAX.	MIN.	MAX.	MIN.	MAX.
12	1.0	100.0	1.0	100.0	1.0	100.5	1.0	100.5	1.0	100.5
15	1.0	100.0	1.0	100.0	1.0	100.5	1.0	100.5	1.0	100.5
18	1.0	100.0	1.0	100.0	1.0	100.5	1.0	100.5	1.0	100.5
21	1.0	100.0	1.0	100.0	1.0	100.5	1.0	100.5	1.0	100.5
24	1.0	100.0	1.0	100.0	1.0	100.5	1.0	100.5	1.0	100.5
27	1.0	92.0	1.0	100.0	1.0	100.5	1.0	100.5	1.0	100.5
30	1.0	100.0	1.0	100.0	1.0	100.5	1.0	100.5	1.0	100.5
33	1.0	89.0	1.0	100.0	1.0	100.5	1.0	100.5	1.0	100.5
36	1.0	79.0	1.0	100.0	1.0	100.5	1.0	100.5	1.0	100.5
42	1.0	68.0	1.0	100.0	1.0	100.5	1.0	100.5	1.0	100.5
48	1.0	61.0	1.0	100.0	1.0	100.5	1.0	100.5	1.0	100.5
54	1.0	57.0	1.0	100.0	1.0	100.5	1.0	100.5	1.0	100.5
60	1.0	30.0	1.0	100.0	1.0	45.0	1.0	57.0	1.0	75.0
66	1.0	31.0	1.0	100.0	1.0	46.0	1.0	57.0	1.0	74.0
72	1.0	32.0	1.0	37.0	1.0	47.0	1.0	57.0	1.0	73.0
78	1.0	32.0	1.0	39.0	1.0	47.0	1.0	57.0	1.0	72.0
84	1.0	33.0	1.0	39.0	1.0	47.0	1.0	57.0	1.0	70.0
90	1.0	33.0	1.0	40.0	1.0	47.0	1.0	57.0	1.0	69.0
96	1.0	33.0	1.0	40.0	1.0	47.0	1.0	57.0	1.0	68.0
102	1.1	34.0	1.1	40.0	1.1	47.0	1.1	57.0	1.1	67.0
108	1.2	34.0	1.2	40.0	1.2	47.0	1.2	55.0	1.2	66.0
114	1.2	34.0	1.2	40.0	1.2	47.0	1.2	55.0	1.2	65.0
120	1.3	34.0	1.3	40.0	1.3	47.0	1.3	55.0	1.3	64.0
126	1.4	34.0	1.4	40.0	1.4	47.0	1.4	54.0	1.4	63.0
132	1.4	34.0	1.4	40.0	1.4	46.0	1.4	54.0	1.4	63.0
138	1.5	34.0	1.5	40.0	1.5	46.0	1.5	54.0	1.5	62.0
144	1.5	34.0	1.5	40.0	1.5	46.0	1.5	53.0	1.5	61.0

NOTE:

1. The tabulated cover depths shall be measured from the bottom of the bituminous or concrete pavement to the top of the pipe.

INDIANA DEPARTMENT OF TRANSPORTATION

PIPE HEIGHT OF COVER LIMITS

SEPTEMBER 2009

STANDARD DRAWING NO. E 715- PHCL-22

RICHARD L. VanCLEAVE REGISTERED No. 9750 STATE OF INDIANA PROFESSIONAL ENGINEER

DESIGN STANDARDS ENGINEER

/s/ Richard L. VanCleave 09/01/09
DESIGN STANDARDS ENGINEER — DATE

/s/ Mark A. Miller 09/01/09
CHIEF HIGHWAY ENGINEER — DATE

REINFORCED CONCRETE HORIZONTAL ELLIPICAL PIPE
HEIGHT OF COVER LIMITS (ft.)

SPAN (in.)	RISE (in.)	AREA (sft)	Strength Class/D-load Rating									
			Class HE-A: $D_{0.01}$ = 600		Class HE-I: $D_{0.01}$ = 800		Class HE-II: $D_{0.01}$ = 1000		Class HE-III: $D_{0.01}$ = 1350		Class HE-IV: $D_{0.01}$ = 2000	
			MIN.	MAX.	MIN.	MAX.	MIN.	MAX.	MIN.	MAX.	MIN.	MAX.
23	14	1.8	1.3	4.0	1.0	8.0	1.0	11.0	1.0	20.0	1.0	100.0
30	19	3.3	1.1	5.0	1.0	7.0	1.0	10.0	1.0	16.0	1.0	47.0
34	22	4.1	1.0	5.0	1.0	8.0	1.0	11.0	1.0	17.0	1.0	48.0
38	24	5.1	1.0	5.0	1.0	8.0	1.0	11.0	1.0	18.0	1.0	49.0
42	27	6.3	1.0	6.0	1.0	9.0	1.0	12.0	1.0	19.0	1.0	50.0
45	29	7.4	1.0	6.0	1.0	9.0	1.0	12.0	1.0	19.0	1.0	45.0
49	32	8.8	1.0	6.0	1.0	9.0	1.0	12.0	1.0	19.0	1.0	45.0
53	34	10.2	1.0	6.0	1.0	9.0	1.0	12.0	1.0	20.0	1.0	44.0
60	38	12.9	1.0	5.0	1.0	8.0	1.0	10.0	1.0	15.0	1.0	26.0
68	43	16.6	1.0	6.0	1.0	8.0	1.0	10.0	1.0	15.0	1.0	27.0
76	48	20.5	1.0	6.0	1.0	8.0	1.0	11.0	1.0	16.0	1.0	28.0
83	53	24.8	1.0	6.0	1.0	9.0	1.0	11.0	1.0	16.0	1.0	29.0
91	58	29.5	1.0	6.0	1.0	9.0	1.0	12.0	1.0	17.0	1.0	29.0
98	63	34.6	1.1	6.0	1.1	9.0	1.1	12.0	1.1	17.0	1.1	29.0
106	68	40.1	1.2	6.0	1.2	9.0	1.2	12.0	1.2	17.0	1.2	30.0
113	72	46.1	1.2	7.0	1.2	9.0	1.2	12.0	1.2	18.0	1.2	30.0
121	77	52.4	1.3	7.0	1.3	9.0	1.3	12.0	1.3	18.0	1.3	30.0
128	82	59.2	1.4	7.0	1.4	10.0	1.4	13.0	1.4	18.0	1.4	30.0
136	87	66.4	1.5	7.0	1.5	10.0	1.5	13.0	1.5	18.0	1.5	31.0
143	92	74.0	1.5	7.0	1.5	10.0	1.5	13.0	1.5	18.0	1.5	31.0
151	97	82.0	1.6	7.0	1.6	10.0	1.6	13.0	1.6	19.0	1.6	31.0
166	106	99.2	1.7	7.0	1.8	10.0	1.8	13.0	1.8	19.0	1.8	31.0
180	116	118.6	1.8	7.0	1.9	10.0	1.9	13.0	1.9	19.0	1.9	31.0

NOTE:

1. The tabulated cover depths shall be measured from the bottom of the asphalt or concrete pavement to the top of the pipe.

INDIANA DEPARTMENT OF TRANSPORTATION

PIPE HEIGHT OF COVER LIMITS

JANUARY 1998

STANDARD DRAWING NO. **E 715-PHCL-23**

ANTHONY L. UREMOVICH REGISTERED No. 18095 STATE OF INDIANA PROFESSIONAL ENGINEER

DESIGN STANDARDS ENGINEER

DETAILS PLACED IN THIS FORMAT 11-15-99

/s/ Anthony L. Uremovich 11-15-99
DESIGN STANDARDS ENGINEER DATE

/s/ Firooz Zandi 11-15-99
CHIEF HIGHWAY ENGINEER DATE

ORIGINALLY APPROVED 1-02-98

MATERIAL	PIPE TYPE				
	1	2	3	4	5
Non-Reinforced Concrete Pipe				X	
Non-Reinforced Concrete Pipe, Class 3 (S)	X	X	X		
Reinforced Concrete Pipe (S)	X	X	X		
Reinforced Concrete Horizontal Elliptical Pipe (S)	X	X	X		
Corrugated Steel Pipe (C)	X		X		X
Corrugated Steel Pipe-Arch (C)	X		X		X
Polymer Precoated Galvanized Corrugated Steel Pipe (C)	X		X		X
Polymer Precoated Galvanized Corrugated Steel Pipe Type 1A (S)	X	X	X		X
Fully Bituminous Coated and Lined Corrugated Steel Pipe (S)		X			X
Polymer Precoated Galvanized Corr. Steel Pipe Arch Type IIA (S)	X	X	X		X
Fully Bituminous Coated and Lined Corrugated Steel Pipe-Arch (S)		X			X
Corrugated Aluminum Alloy Pipe (C)	X		X		X
Corrugated Aluminum Alloy Pipe-Arch (C)	X		X		X
Structural Plate Steel Pipe (C)	X		X		
Polymer Precoated Galvanized Corrugated Steel Pipe-Arch (C)	X		X		X

MATERIAL	PIPE TYPE				
	1	2	3	4	5
Structural Plate Steel Pipe-Arch (C)	X		X		
Structural Plate Aluminum Alloy Pipe (C)	X		X		
Structural Plate Aluminum Alloy Pipe-Arch (C)	X		X		
Clay Pipe, Extra Strength (S)	X	X	X		
Clay Pipe				X	
Perforated Clay Pipe				X	
Corrugated Polyethylene Pipe, Type SP				X	
Corrugated Polyethylene Pipe, Type (S)	X	X	X	X	X
Ribbed Polyethylene Pipe (S)	X	X	X		X
Smooth Wall Polyethylene Pipe (S)	X	X	X		X
Corrugated Polyethylene Drainage Tubing				X	
Perforated PVC Semicircular Pipe				X	
Profile Wall PVC Pipe (S)	X	X	X	X	X
Smooth Wall PVC Pipe (S)	X	X	X		X
Concrete Drain Tile				X	
Clay Drain Tile				X	

GENERAL NOTES

1. The prescribed uses for the pipe types are as follows:
   a. Type 1 Pipe - Culverts under mainline pavement and public road approaches.
   b. Type 2 Pipe - Storm sewer pipe.
   c. Type 3 Pipe - Culverts under driveways and field entrances.
   d. Type 4 Pipe - Drain tile and longitudinal underdrains.
   e. Type 5 Pipe - Broken back and other installations requiring coupled pipe.
2. Refer to Standard Drawings E 715-PHCL-01 through E 715-PHCL-23 and E 717-PHCL-01 through E 717-PHCL-10 for allowable heights of cover for various pipe materials (except Type 4 pipes).
3. Refer to Standard Drawings E 715-PSLC-01 through E 715-PSLC-03 for required pipe service life criteria.
4. Any pipe material which is in accordance with the designated pipe type, acceptable for cover conditions, and conforms to service life criteria may be installed.

LEGEND

(C)- Corrugated Interior Culvert Pipe.

(S)- Smooth Interior Culvert or Storm Sewer Pipe.

INDIANA DEPARTMENT OF TRANSPORTATION

PIPE CLASSIFICATION TABLES

SEPTEMBER 2010

STANDARD DRAWING NO. E 715-PIPE-01

RICHARD L. VanCLEAVE REGISTERED No. 9750 STATE OF INDIANA PROFESSIONAL ENGINEER

DESIGN STANDARDS ENGINEER

/s/ Richard L. VanCleave 09/01/10
DESIGN STANDARDS ENGINEER DATE

/s/ Mark A. Miller 09/01/10
CHIEF HIGHWAY ENGINEER DATE

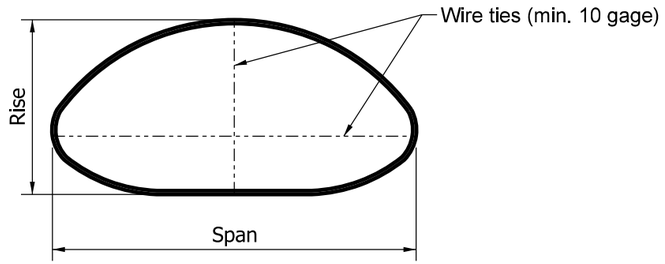

STEEL PIPE-ARCH SECTIONS
END STABILIZATION OF 3" x 1" CORRUGATED ①

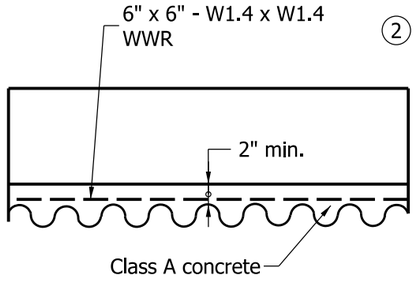

TYPICAL LONGITUDINAL SECTION

NOTES:

① In order to maintain their manufactured shape, all 3" x 1" corrugated steel pipe-arch sections shall have wire ties attached at each end as shown in the detail. The wire ties shall be attached across the largest vertical and horizontal dimension of the pipe-arch. The wire ties shall be installed by the manufacturer and shall remain in place until the on-site installation is complete.

② WWR shall be wired to every second circumferenial bolt and every twelfth longitudinal bolt.

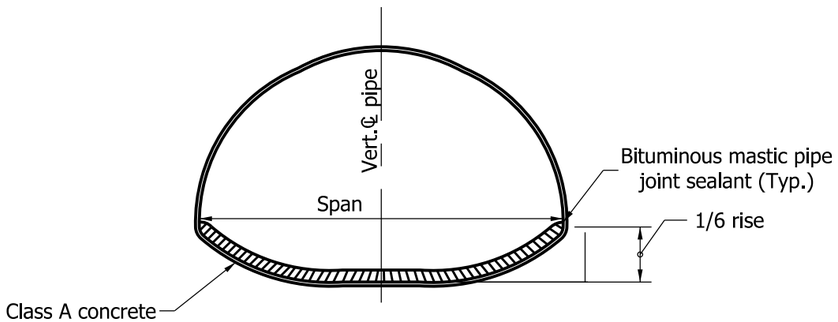

STRUCTURAL PLATE
PIPE-ARCH CULVERT
ELEVATION

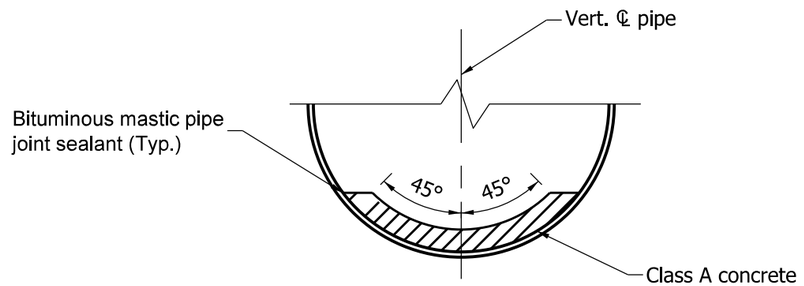

STRUCTURAL PLATE
PIPE CULVERT

CONCRETE FIELD PAVED INVERT DETAILS

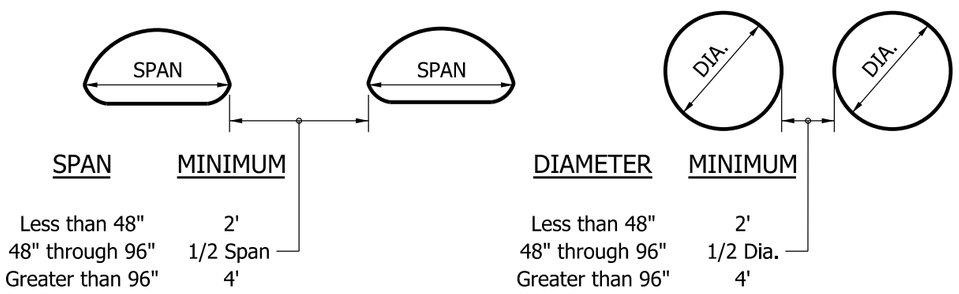

MULTIPLE INSTALLATIONS

INDIANA DEPARTMENT OF TRANSPORTATION

MISCELLANEOUS PIPE
DETAILS

SEPTEMBER 2011

STANDARD DRAWING NO. E 715-PIPE-02

RICHARD L. VanCLEAVE
REGISTERED
No. 9750
STATE OF INDIANA
PROFESSIONAL ENGINEER

DESIGN STANDARDS ENGINEER

/s/ Richard L. Vancleave 09/01/11
DESIGN STANDARDS ENGINEER DATE

/s/ Mark A. Miller 09/01/11
CHIEF HIGHWAY ENGINEER DATE

REQUIREMENTS FOR CORRUGATED STEEL PIPE THICKNESS AND PROTECTION AT NON-ABRASIVE SITES

pH	≤ 4.0	4.5	5.0	5.5	6.0	6.5	≥ 7.0	Steel Conduit Type
Thickness required for 50 year Design Service Life				0.168	0.168	0.138	0.109	Zinc Coated Corrugated Steel Pipe Zinc Coated Corrugated Steel Pipe-Arch
			0.138	0.109	0.109	0.079	0.064	Zinc Coated Corrugated Steel Pipe w/Paved Invert Zinc Coated Corrugated Steel Pipe-Arch w/Paved Invert Fully Bituminous Coated and Lined Corrugated Steel Pipe Fully Bituminous Coated and Lined Corrugated Steel Pipe-Arch
			0.138	0.109	0.109	0.079	0.064	Aluminum Coated Type 2 Corrugated Steel Pipe Aluminum Coated Type 2 Corrugated Steel Pipe-Arch
	0.109	0.109	0.079	0.064	0.064	0.064	0.064	Polymer Precoated Galvanized Corrugated Steel Pipe Polymer Precoated Galvanized Corrugated Steel Pipe-Arch
	0.111*	0.111*	0.111*	0.170	0.111	0.111	0.111	Structural Plate Steel Pipe Structural Plate Steel Pipe-Arch

* -- Concrete field paving required

pH	≤ 4.0	4.5	5.0	5.5	6.0	6.5	≥ 7.0	Steel Conduit Type
Thickness required for 75 year Design Service Life						0.168	0.138	Zinc Coated Corrugated Steel Pipe Zinc Coated Corrugated Steel Pipe-Arch
				0.168	0.168	0.138	0.109	Zinc Coated Corrugated Steel Pipe w/Paved Invert Zinc Coated Corrugated Steel Pipe-Arch w/Paved Invert Fully Bituminous Coated and Lined Corrugated Steel Pipe Fully Bituminous Coated and Lined Corrugated Steel Pipe-Arch
						0.138	0.109	Aluminum Coated Type 2 Corrugated Steel Pipe Aluminum Coated Type 2 Corrugated Steel Pipe-Arch
				0.138	0.138	0.109	0.109	Polymer Precoated Galvanized Corrugated Steel Pipe Polymer Precoated Galvanized Corrugated Steel Pipe-Arch
	0.111*	0.111*	0.111*	0.218	0.111	0.111	0.111	Structural Plate Steel Pipe Structural Plate Steel Pipe-Arch

* -- Concrete field paving required
Refer to Standard Drawing E 715-PSLC-03 for General Notes.

INDIANA DEPARTMENT OF TRANSPORTATION

PIPE SERVICE LIFE CRITERIA

MARCH 2006

STANDARD DRAWING NO. E 715-PSLC-01

RICHARD L. VanCLEAVE REGISTERED No. 9750 STATE OF INDIANA PROFESSIONAL ENGINEER

DESIGN STANDARDS ENGINEER

/s/ Richard L. VanCleave 3-01-06
DESIGN STANDARDS ENGINEER DATE

/s/ Richard K. Smutzer 3-01-06
CHIEF HIGHWAY ENGINEER DATE

REQUIREMENTS FOR CORRUGATED STEEL PIPE THICKNESS AND PROTECTION AT ABRASIVE SITES

pH	≤ 4.0	4.5	5.0	5.5	6.0	6.5	≥ 7.0	Steel Conduit Type
Thickness required for 50 year Design Service Life				0.168	0.168	0.138	0.109	Zinc Coated Corrugated Steel Pipe w/Paved Invert Zinc Coated Corrugated Steel Pipe-Arch w/Paved Invert Fully Bituminous Coated and Lined Corrugated Steel Pipe Fully Bituminous Coated and Lined Corrugated Steel Pipe-Arch
			0.138	0.109	0.109	0.079	0.064	Aluminum Coated Type 2 Corrugated Steel Pipe w/Paved Invert Aluminum Coated Type 2 Corrugated Steel Pipe-Arch w/Paved Invert
	0.109	0.109	0.079	0.064	0.064	0.064	0.064	Polymer Precoated Galvanized Corrugated Steel Pipe Polymer Precoated Galvanized Corrugated Steel Pipe Arch
				0.170	0.111	0.111	0.111	Structural Plate Steel Pipe w/Concrete Field Paving Structural Plate Steel Pipe-Arch w/Concrete Field Paving

pH	≤ 4.0	4.5	5.0	5.5	6.0	6.5	≥ 7.0	Steel Conduit Type
Thickness required for 75 year Design Service Life						0.168	0.138	Zinc Coated Corrugated Steel Pipe w/Paved Invert Zinc Coated Corrugated Steel Pipe-Arch w/Paved Invert Fully Bituminous Coated and Lined Corrugated Steel Pipe Fully Bituminous Coated and Lined Corrugated Steel Pipe-Arch
						0.138	0.109	Aluminum Coated Type 2 Corrugated Steel Pipe w/Paved Invert Aluminum Coated Type 2 Corrugated Steel Pipe-Arch w/Paved Invert
				0.138	0.138	0.109	0.109	Polymer Precoated Galvanized Corrugated Steel Pipe Polymer Precoated Galvanized Corrugated Steel Pipe Arch
				0.218	0.111	0.111	0.111	Structural Plate Steel Pipe w/Concrete Field Paving Structural Plate Steel Pipe-Arch w/Concrete Field Paving

Refer to Standard Drawing E 715-PSLC-03 for General Notes.

INDIANA DEPARTMENT OF TRANSPORTATION

PIPE SERVICE LIFE CRITERIA

MARCH 2006

STANDARD DRAWING NO. E 715-PSLC-02

RICHARD L. VanCLEAVE REGISTERED No. 9750 STATE OF INDIANA PROFESSIONAL ENGINEER

DESIGN STANDARDS ENGINEER

/s/ Richard L. VanCleave 3-01-06
DESIGN STANDARDS ENGINEER DATE

/s/ Richard K. Smutzer 3-01-06
CHIEF HIGHWAY ENGINEER DATE

GENERAL NOTES

1. "X" entries in the table indicate that a thickness which satisfies the required design service life is not available.

2. The tabulated plate thickness for Structural Plate Steel Pipe and Pipe-Arches reflects the required thickness for the top and side plates. If the tabulated plate thickness is less than 0.280 in. the bottom plates shall be of the next greater available thickness.

3. Corrugated Aluminum Alloy Pipe and Pipe-Arches and Aluminum Alloy Structural Plate Pipe and Pipe-Arches are acceptable with the minimum thickness required to satisfy cover conditions for all non-abrasive sites with a structure pH $\geq$ 5.0.

4. Corrugated Aluminum Alloy Pipe and Pipe-Arches with bituminous paved invert and Aluminum Alloy Structural Plate Pipe and Pipe-Arches with concrete field paving are acceptable with the minimum thickness required to satisfy cover conditions for all abrasive sites with a structure pH $\geq$ 5.0.

5. Service life criteria apply to only reinforced concrete, corrugated metal, and structural plate metal pipe. Other materials which conform to the designated pipe type and height of cover parameters are acceptable for installation.

6. Service life criteria do not apply to Type 4 pipe.

REQUIREMENTS FOR REINFORCED CONCRETE PIPE PROTECTION

Pipe Slope	Minimum pH to Attain Design Service Life	
	50 Year	75 Year
Less than 3%	4.0	4.5
3% to 10%	4.5	5.0
Greater than 10%	5.0	5.5

For a structure pH lower than the minimums listed above, reinforced concrete pipe shall not be used.

INDIANA DEPARTMENT OF TRANSPORTATION

PIPE SERVICE LIFE CRITERIA

JANUARY 1998

STANDARD DRAWING NO. **E 715-PSLC-03**

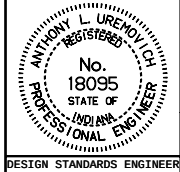

DESIGN STANDARDS ENGINEER

DETAILS PLACED IN THIS FORMAT 7-27-99

/s/ Anthony L. Uremovich 7-27-99
DESIGN STANDARDS ENGINEER DATE

/s/ Firooz Zandi 7-27-99
CHIEF HIGHWAY ENGINEER DATE

ORIGINALLY APPROVED 1-02-98

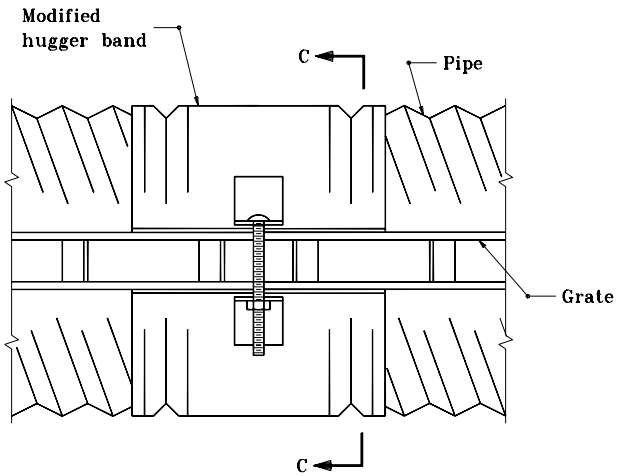

MODIFIED HUGGER BAND
TOP VIEW

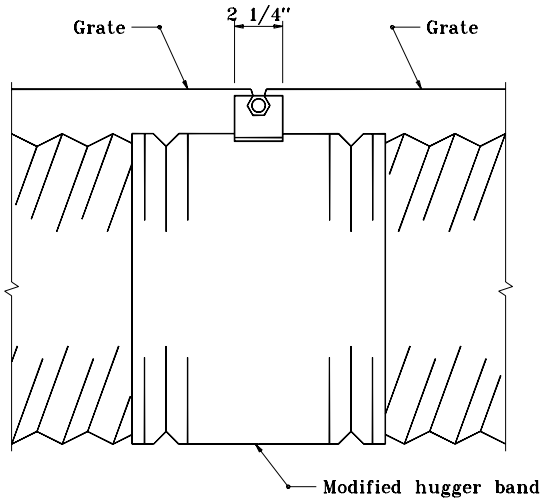

MODIFIED HUGGER BAND
SIDE VIEW

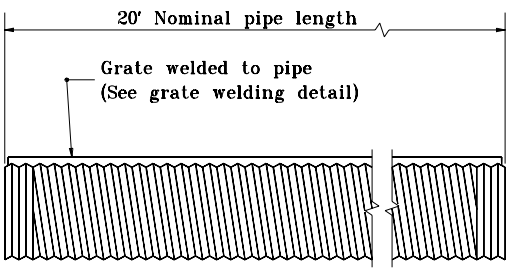

TYPICAL PIPE SECTION

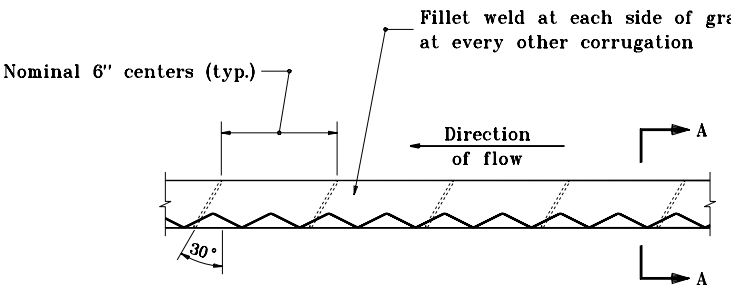

GRATE WELDING DETAIL

INDIANA DEPARTMENT OF TRANSPORTATION

SLOTTED DRAIN PIPE

APRIL 1995

STANDARD DRAWING NO. **E 715-SDLR-01**

ANTHONY L. UREMOVICH REGISTERED No. 18095 STATE OF INDIANA PROFESSIONAL ENGINEER

DESIGN STANDARDS ENGINEER

DETAILS PLACED IN THIS FORMAT	11-15-99
/s/ Anthony L. Uremovich DESIGN STANDARDS ENGINEER	11-15-99 DATE
/s/ Firooz Zandi CHIEF HIGHWAY ENGINEER	11-15-99 DATE
ORIGINALLY APPROVED	4-04-95

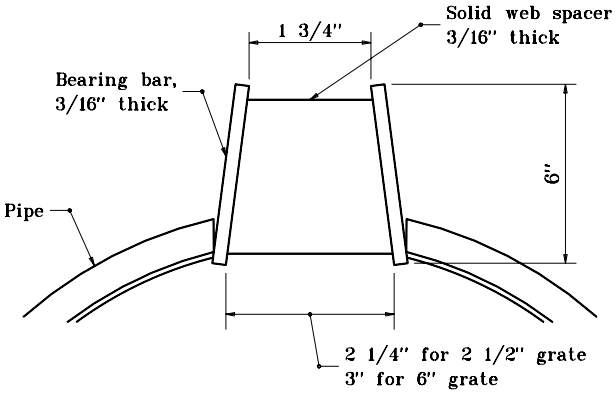

SECTION A–A
STANDARD GRATE DETAIL

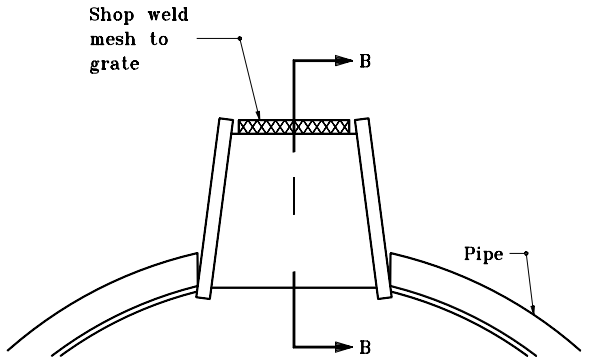

SECTION A–A
GRATE DETAIL WITH MESH

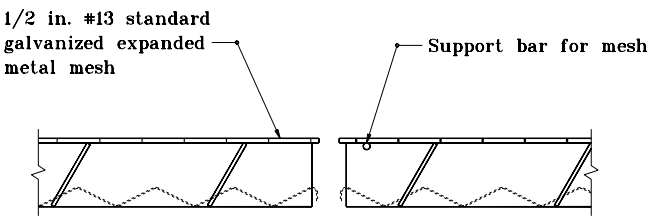

SECTION B–B

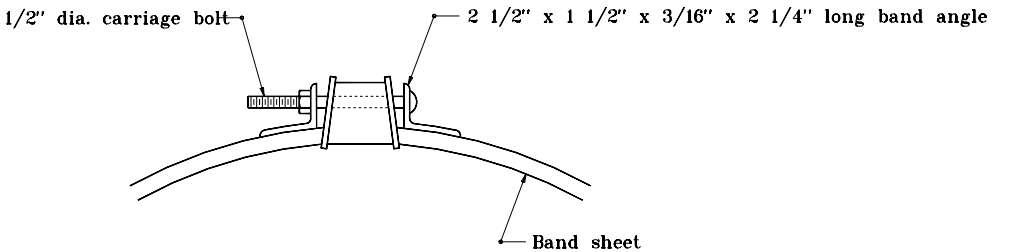

SECTION C–C

STANDARD SIZES						
PIPE THICK-NESS (IN.)	DIAMETER OF PIPE (IN.)					
	12	15	18	24	30	36
0.064	X	X	X	X	X	X
0.079	X	X	X	X	X	X
0.109	N.A.	N.A.	N.A.	N.A.	X	X

X – Size available for designated thickness

N.A. – Size not available for designated thickness

INDIANA DEPARTMENT OF TRANSPORTATION

SLOTTED DRAIN PIPE

JANUARY 1998

STANDARD DRAWING NO. **E 715-SLDR-02**

ANTHONY L. UREMOVICH REGISTERED No. 18095 STATE OF INDIANA PROFESSIONAL ENGINEER

DESIGN STANDARDS ENGINEER

DETAILS PLACED IN THIS FORMAT 11-15-99

/s/ Anthony L. Uremovich 11-15-99
DESIGN STANDARDS ENGINEER DATE

/s/ Firooz Zandi 11-15-99
CHIEF HIGHWAY ENGINEER DATE

ORIGINALLY APPROVED 1-02-98

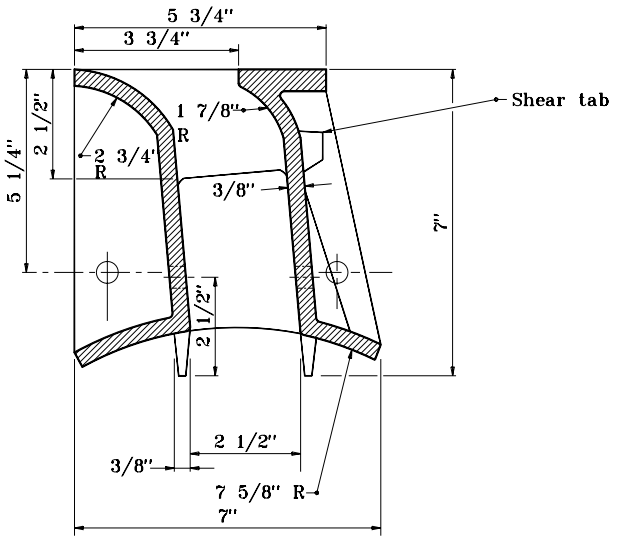

SECTION THROUGH VANE DRAIN

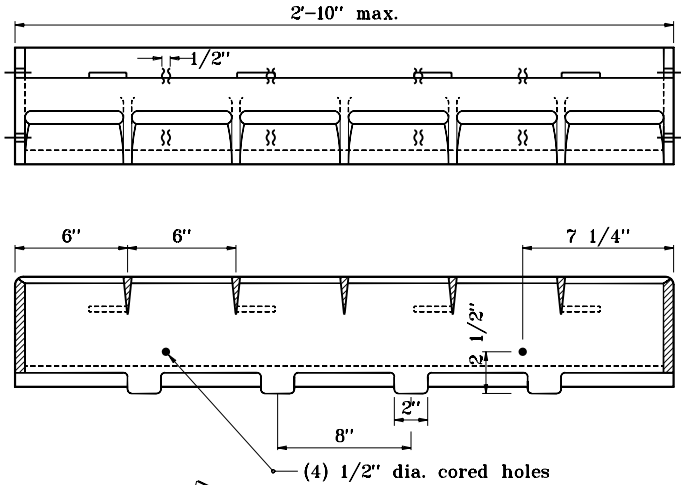

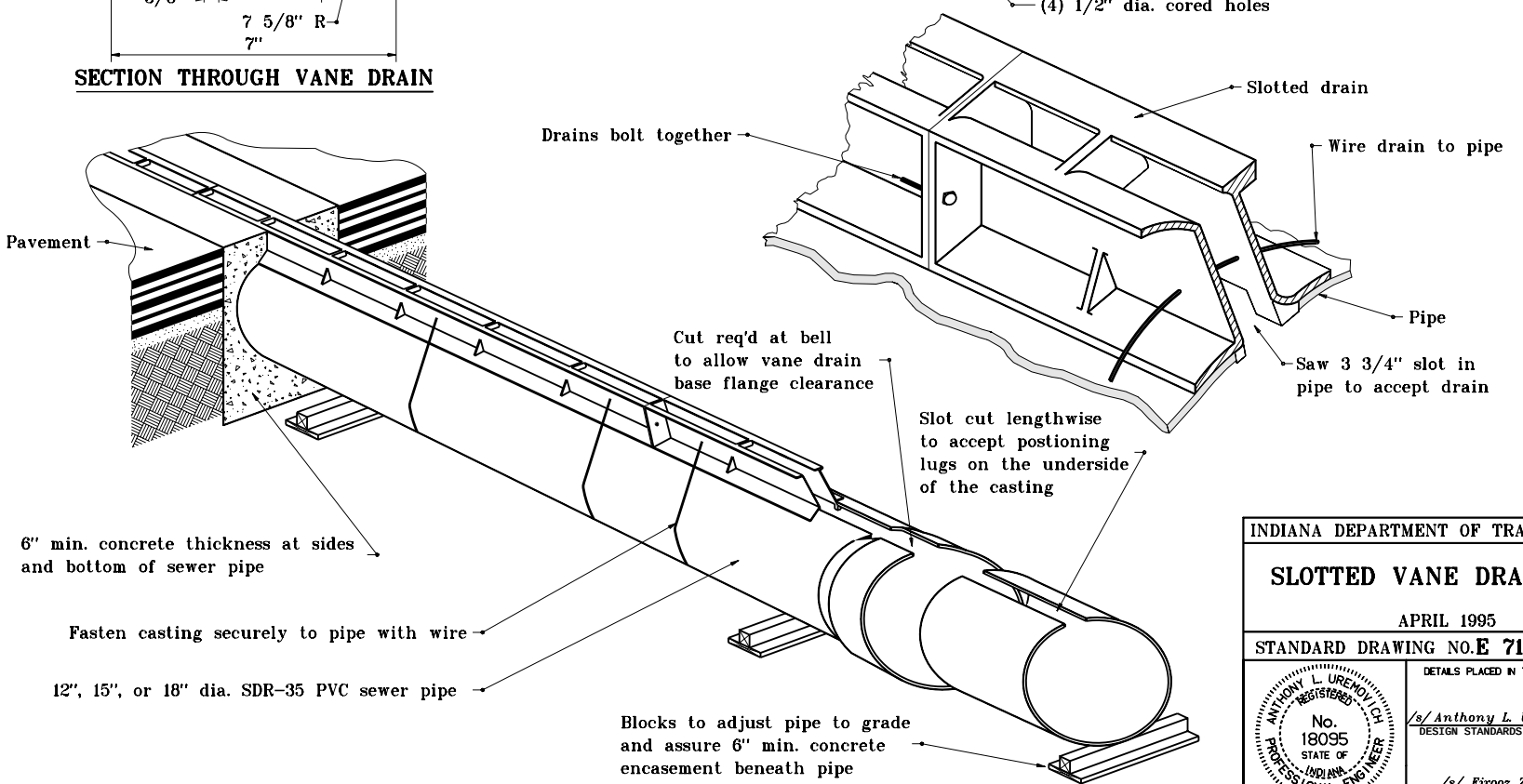

INDIANA DEPARTMENT OF TRANSPORTATION

SLOTTED VANE DRAIN PIPE

APRIL 1995

STANDARD DRAWING NO. **E 715-SLDR-03**

ANTHONY L. UREMOVICH REGISTERED No. 18095 STATE OF INDIANA PROFESSIONAL ENGINEER

DESIGN STANDARDS ENGINEER

DETAILS PLACED IN THIS FORMAT	11-15-99
/s/ Anthony L. Uremovich DESIGN STANDARDS ENGINEER	11-15-99 DATE
/s/ Firooz Zandi CHIEF HIGHWAY ENGINEER	11-15-99 DATE
ORGINALLY APPROVED	4-03-95

GENERAL NOTES

1. Longitudinal safety bar shall be welded to transverse bars. For cross structure and section, if S ⟨ 2'–6, no longitudinal safety bar is required. If S ⟩ 2'–6, longitudinal safety bar(s) shall be provided so S_1 ⟨ 2'–6.

2. Bolts shall be oriented with threads to inside of end section.

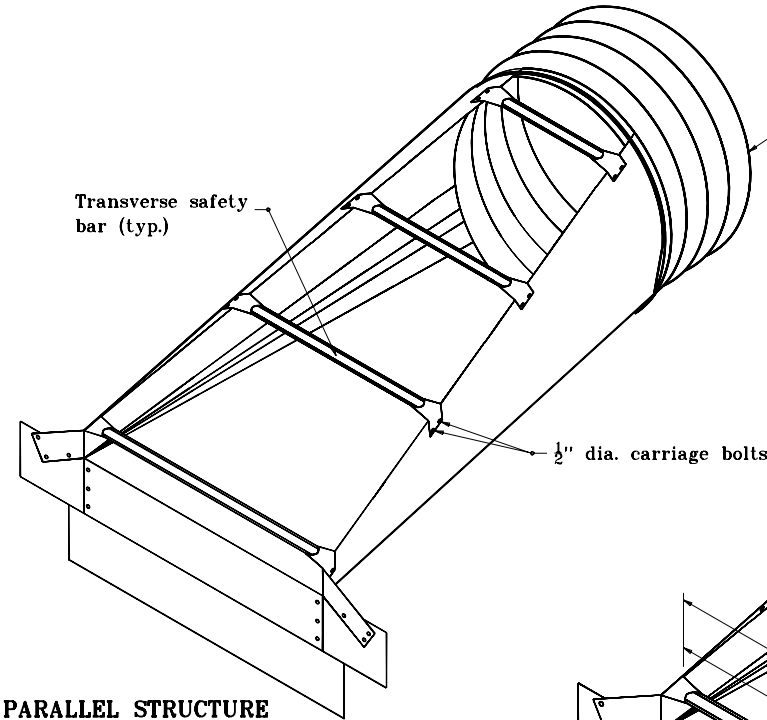

PARALLEL STRUCTURE END SECTION

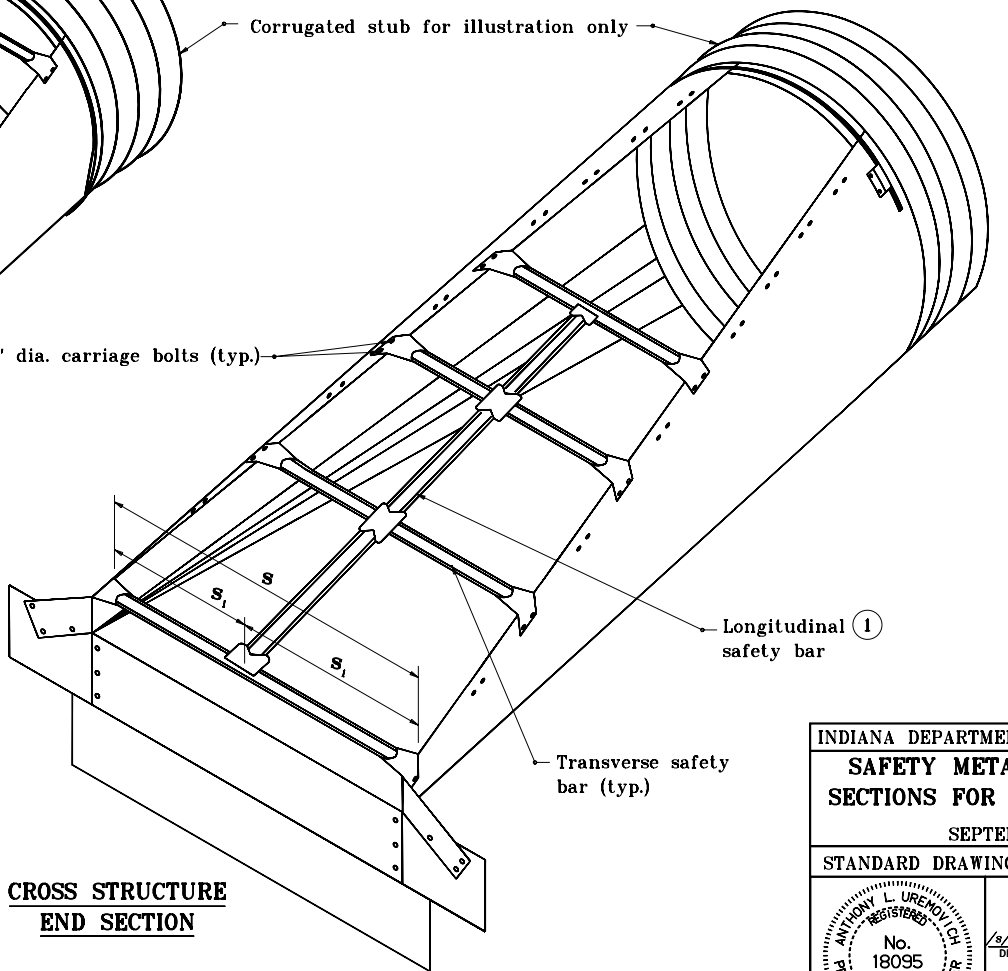

CROSS STRUCTURE END SECTION

LEGEND

s – Overall span

s_1 – Span between end section edge and longitudinal safety bar or between longitudinal safety bars.

$$s_1 = \frac{s}{n + 1}$$

where n = Number of longitudinal safety bars

INDIANA DEPARTMENT OF TRANSPORTATION

SAFETY METAL CULVERT END SECTIONS FOR CORRUGATED PIPE

SEPTEMBER 2000

STANDARD DRAWING NO. **E 715–SMES–01**

ANTHONY L. UREMOVICH REGISTERED No. 18095 STATE OF INDIANA PROFESSIONAL ENGINEER

DESIGN STANDARDS ENGINEER

/s/ Anthony L. Uremovich 9–01–00
DESIGN STANDARDS ENGINEER — DATE

/s/ Firooz Zandi 9–01–00
CHIEF HIGHWAY ENGINEER — DATE

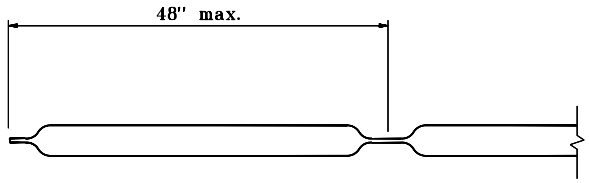

LONGITUDINAL SAFETY BAR DETAIL

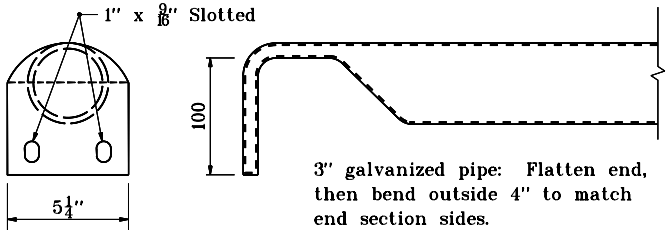

OR

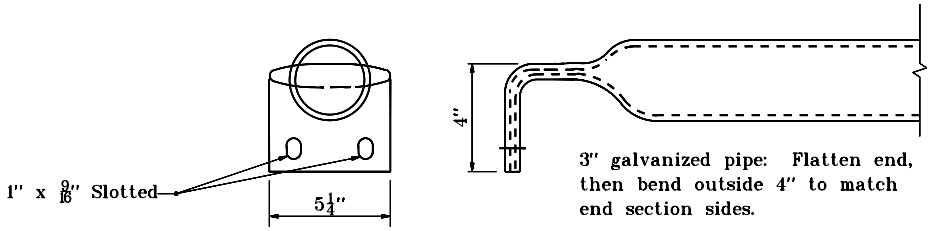

TRANSVERSE SAFETY BAR DETAILS

INDIANA DEPARTMENT OF TRANSPORTATION

SAFETY METAL CULVERT END SECTIONS FOR CORRUGATED PIPE

JANUARY 1998

STANDARD DRAWING NO. E 715-SMES-02

ANTHONY L. UREMOVICH REGISTERED No. 18095 STATE OF INDIANA PROFESSIONAL ENGINEER

DESIGN STANDARDS ENGINEER

DETAILS PLACED IN THIS FORMAT 7-27-99

/s/ Anthony L. Uremovich 7-27-99
DESIGN STANDARDS ENGINEER DATE

/s/ Firooz Zandi 7-27-99
CHIEF HIGHWAY ENGINEER DATE

ORIGINALLY APPROVED 1-02-98

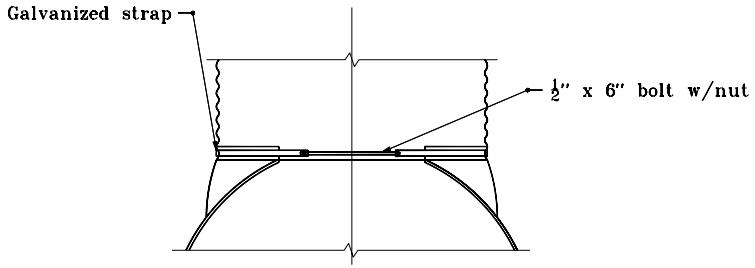

TYPE 1 CONNECTOR DETAIL
Through 24" dia.

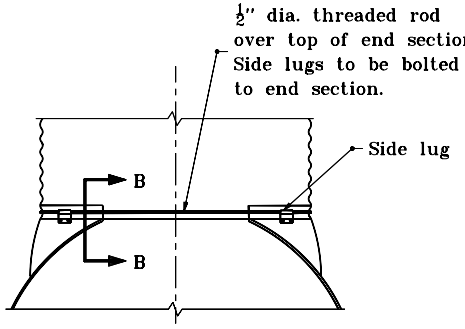

TYPE 2 CONNECTOR DETAIL
For all circular pipes larger than 24"
and all pipe-arches

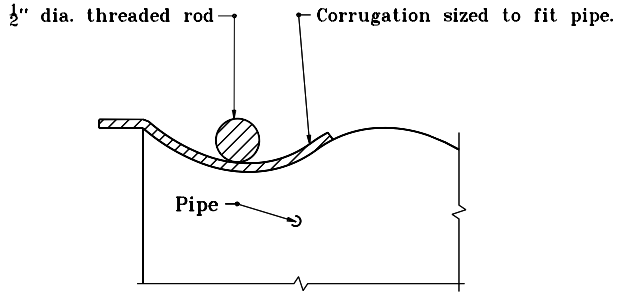

SECTION B-B

GENERAL NOTES

1. For circular pipe diameters through 24", attach end section to pipe with type 1 connector. For all other sizes, attach end section to pipe with type 2 connector.

INDIANA DEPARTMENT OF TRANSPORTATION

SAFETY METAL CULVERT END SECTIONS FOR CORRUGATED PIPE

JANUARY 1998

STANDARD DRAWING NO. **E 715-SMES-03**

ANTHONY L. UREMOVICH REGISTERED No. 18095 STATE OF INDIANA PROFESSIONAL ENGINEER
DESIGN STANDARDS ENGINEER

DETAILS PLACED IN THIS FORMAT	7-27-99
/s/ Anthony L. Uremovich, DESIGN STANDARDS ENGINEER	7-27-99
/s/ Firooz Zandi, CHIEF HIGHWAY ENGINEER	7-27-99
ORIGINALLY APPROVED	1-02-98

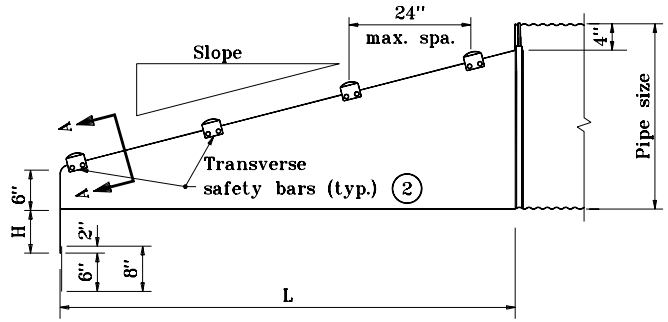

SIDE ELEVATION OF PARALLEL STRUCTURE END SECTION

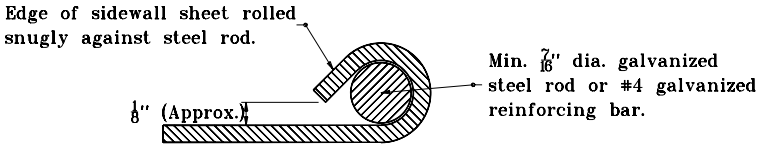

SECTION A–A

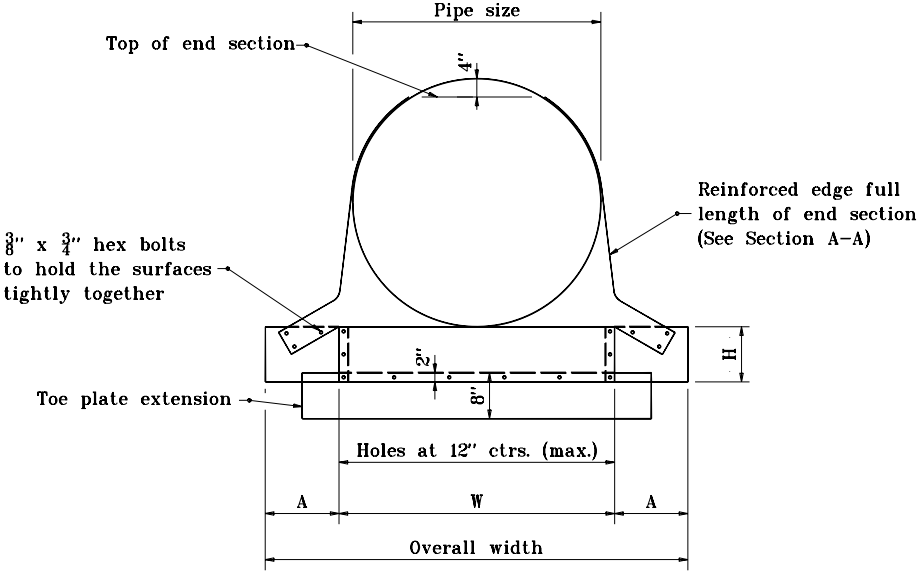

FRONT VIEW

GENERAL NOTES

1. See Standard Drawing E 715–SMES–06 for variable dimensions.

(2) Transverse safety bars shall be schedule 40 galvanized steel pipe. Pipe shall be galvanized after forming. Number of bars required will vary depending on the length of the end sections.

3. The toe plate extension shall be the same thickness as the end section. The dimension shall be the end section overall width less 6".

INDIANA DEPARTMENT OF TRANSPORTATION

SAFETY METAL CULVERT END SECTIONS FOR CORRUGATED PIPE

JANUARY 1998

STANDARD DRAWING NO. E 715–SMES–04

ANTHONY L. UREMOVICH REGISTERED No. 18095 STATE OF INDIANA PROFESSIONAL ENGINEER

DESIGN STANDARDS ENGINEER

DETAILS PLACED IN THIS FORMAT 7-27-99

/s/ Anthony L. Uremovich 7-27-99
DESIGN STANDARDS ENGINEER DATE

/s/ Firooz Zandi 7-27-99
CHIEF HIGHWAY ENGINEER DATE

ORIGINALLY APPROVED 1-02-98

GENERAL NOTES

(1) Toe plate extension shall be the same thickness as the end section. Dimension shall be overall width less 6".

(2) Transverse safety bars shall be Schedule 40 galvanized steel pipe. Pipe shall be galvanized after forming. Number of bars required will vary depending on the length of the end sections.

3. Slotted holes for safety bar attachment shall be provided for all end sections.

4. See Standard Drawing E 715-SMES-04 for Section A-A.

5. See Standard Drawing E 715-SMES-06 for variable dimensions.

(6) See Standard Drawing E 715-SMES-01 for warrant of longitudinal saftey bar.

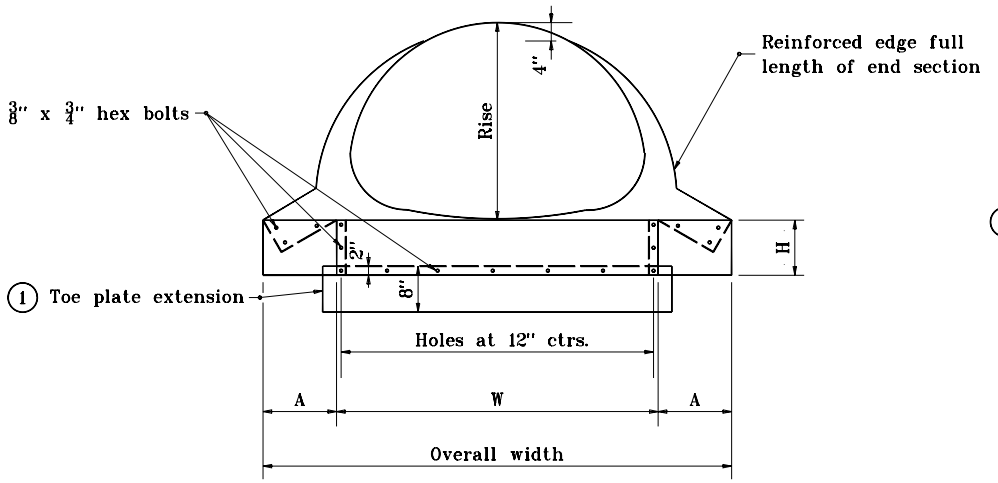

FRONT VIEW

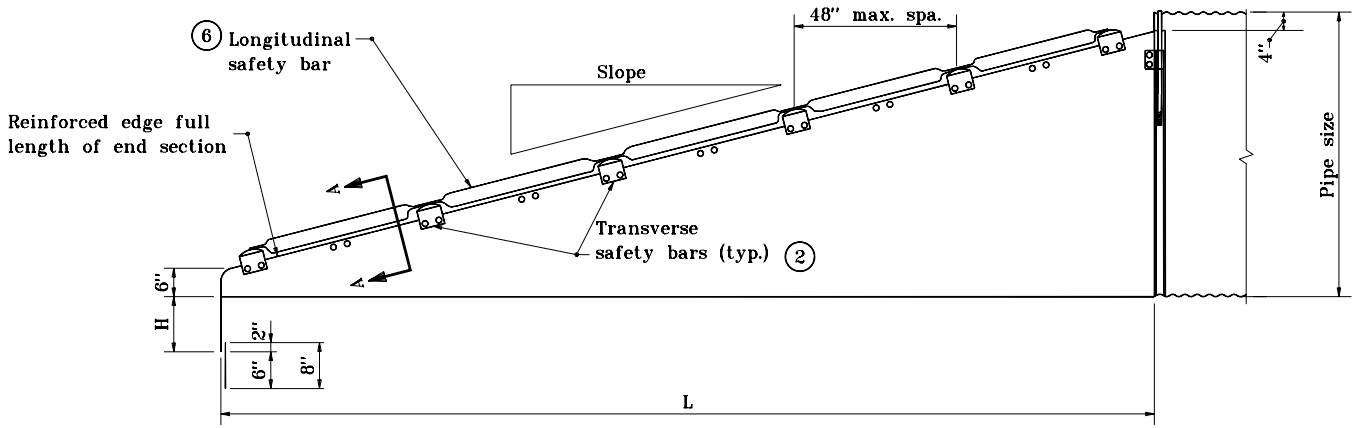

SIDE ELEVATION FOR CROSS STRUCTURE END SECTION

INDIANA DEPARTMENT OF TRANSPORTATION

SAFETY METAL CULVERT END SECTIONS FOR CORRUGATED PIPE

JANUARY 1998

STANDARD DRAWING NO. **E 715-SMES-05**

ANTHONY L. UREMOVICH REGISTERED No. 18095 STATE OF INDIANA PROFESSIONAL ENGINEER

DESIGN STANDARDS ENGINEER

DETAILS PLACED IN THIS FORMAT	7-27-99
/s/ Anthony L. Uremovich, DESIGN STANDARDS ENGINEER	7-27-99 DATE
/s/ Firooz Zandi, CHIEF HIGHWAY ENGINEER	7-27-99 DATE
ORIGINALLY APPROVED	1-02-98

METAL END SECTIONS FOR CIRCULAR PIPES									
Pipe Dia.	Min. Thick.	Dimensions, in.				L Dimensions			
		A	H	W	Overall Width	Slope	Length (in.)	Slope	Length (in.)
15	.064	8	6	37	37	4:1	20	6:1	30
18	.064	8	6	40	40	4:1	32	6:1	48
21	.064	8	6	43	43	4:1	44	6:1	66
24	.064	8	6	46	46	4:1	56	6:1	84
30	.109	12	9	60	60	4:1	80	6:1	120
36	.109	12	9	66	66	4:1	104	6:1	156
42	.109	16	12	80	80	4:1	128	6:1	192
48	.109	16	12	86	86	4:1	152	6:1	228
54	.109	16	12	92	92	4:1	176	6:1	264
60	.109	16	12	66	98	4:1	200	6:1	300

SAFETY METAL END SECTIONS FOR PIPE-ARCHES											
Equiv. Dia. (in.)	(inches)		Min. Thick.	Dimensions, in.				L Dimensions			
	Span	Rise	in.	A	H	W	Overall Width	Slope	Length (in.)	Slope	Length (in.)
18	21	15	.064	8	6	27	43	4:1	20	6:1	30
21	24	18	.064	8	6	30	46	4:1	32	6:1	48
24	28	20	.064	8	6	34	50	4:1	40	6:1	60
30	35	24	.079	12	9	41	65	4:1	56	6:1	84
36	42	29	.109	12	9	48	72	4:1	76	6:1	114
42	49	33	.109	16	12	55	87	4:1	92	6:1	138
48	57	38	.109	16	12	63	95	4:1	112	6:1	168
54	64	43	.109	16	12	70	102	4:1	132	6:1	198
60	71	47	.109	16	12	77	109	4:1	148	6:1	222
72	83	57	.109	16	12	89	121	4:1	188	6:1	282

INDIANA DEPARTMENT OF TRANSPORTATION

SAFETY METAL CULVERT END SECTIONS FOR CORRUGATED PIPE

JANUARY 1998

STANDARD DRAWING NO. E 715-SMES-06

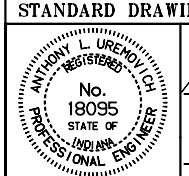

DESIGN STANDARDS ENGINEER

DETAILS PLACED IN THIS FORMAT 11-15-99

/s/ Anthony L. Uremovich 11-15-99
DESIGN STANDARDS ENGINEER DATE

/s/ Firooz Zandi 11-15-99
CHIEF HIGHWAY ENGINEER DATE

ORIGINALLY APPROVED 1-02-98

GENERAL NOTES

1. Longitudinal safety bar shall be welded to transverse bars. For cross structure and section, if S ⟨ 2'–6, no longitudinal safety bar is required. If S ⟩ 2'–6, longitudinal safety bar(s) shall be provided so S_1 ⟨ 2'–6.

2. Bolts shall be oriented with threads to inside of end section.

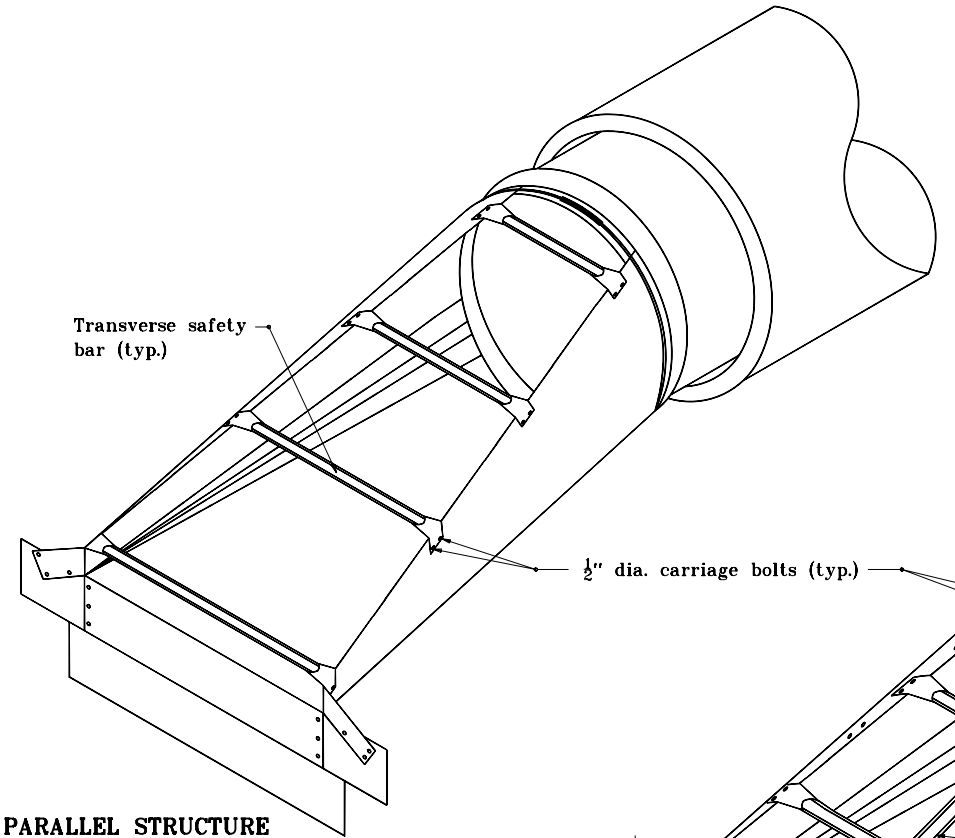

PARALLEL STRUCTURE END SECTION

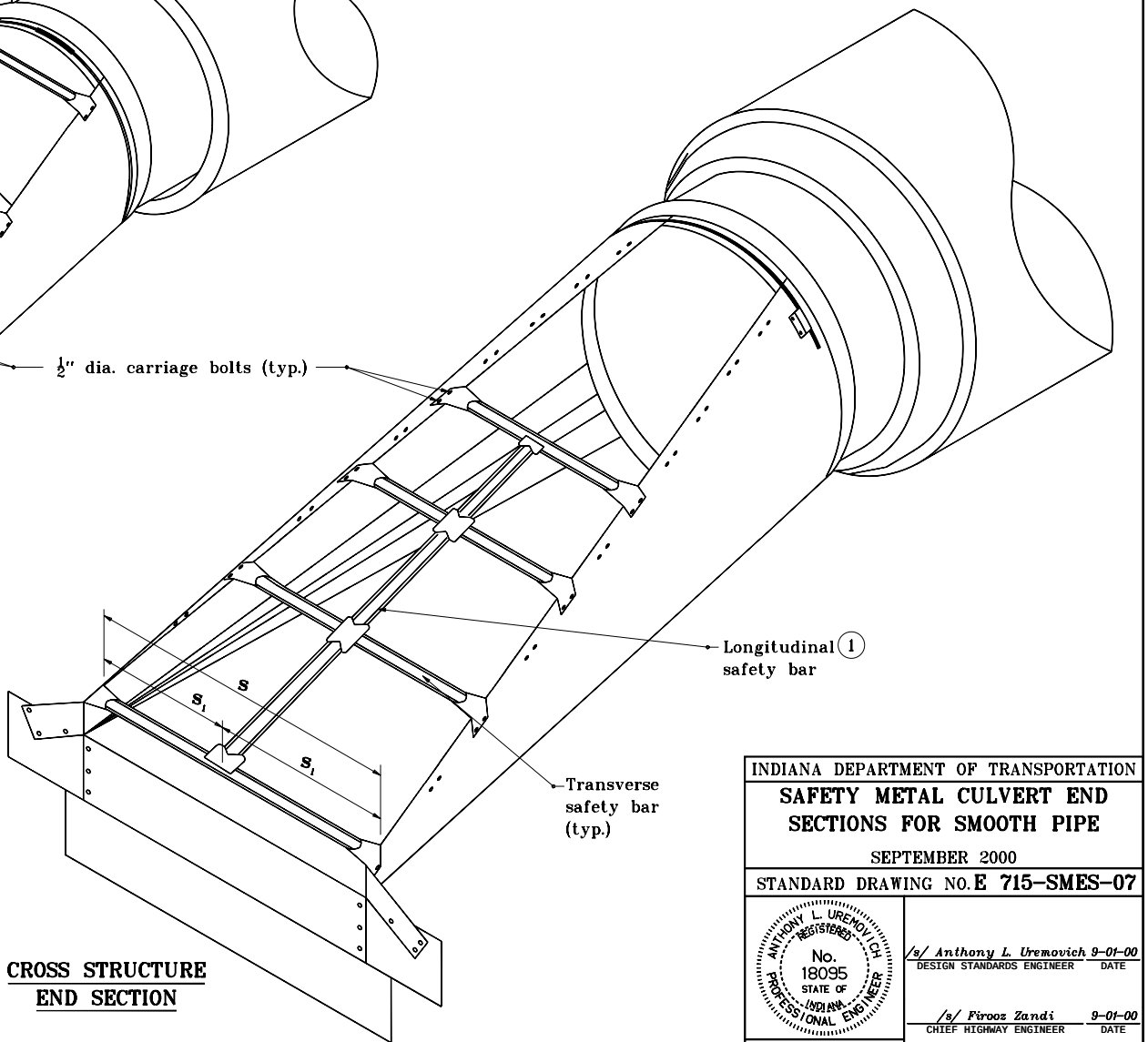

CROSS STRUCTURE END SECTION

LEGEND

s – Overall span

s_1 – Span between end section edge and longitudinal safety bar or between longitudinal safety bars.

$$s_1 = \frac{s}{n+1}$$

where n = Number of longitudinal safety bars

INDIANA DEPARTMENT OF TRANSPORTATION

SAFETY METAL CULVERT END SECTIONS FOR SMOOTH PIPE

SEPTEMBER 2000

STANDARD DRAWING NO. **E 715–SMES–07**

ANTHONY L. UREMOVICH REGISTERED No. 18095 STATE OF INDIANA PROFESSIONAL ENGINEER

DESIGN STANDARDS ENGINEER

/s/ Anthony L. Uremovich 9–01–00
DESIGN STANDARDS ENGINEER — DATE

/s/ Firooz Zandi 9–01–00
CHIEF HIGHWAY ENGINEER — DATE

GENERAL NOTES

1. For circular pipe diameters through 24", attach end section to pipe with type 1 connector. For all other sizes, attach end section to pipe with type 2 connector.

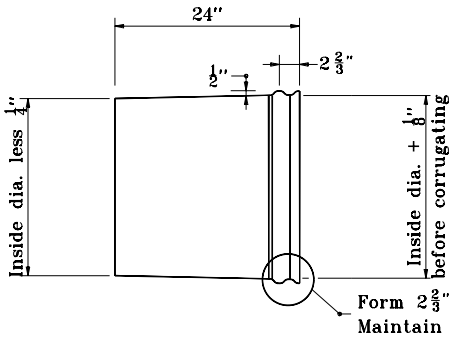

SMOOTH TAPERED SLEEVE DETAIL

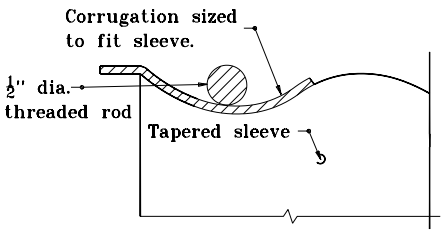

SECTION B–B

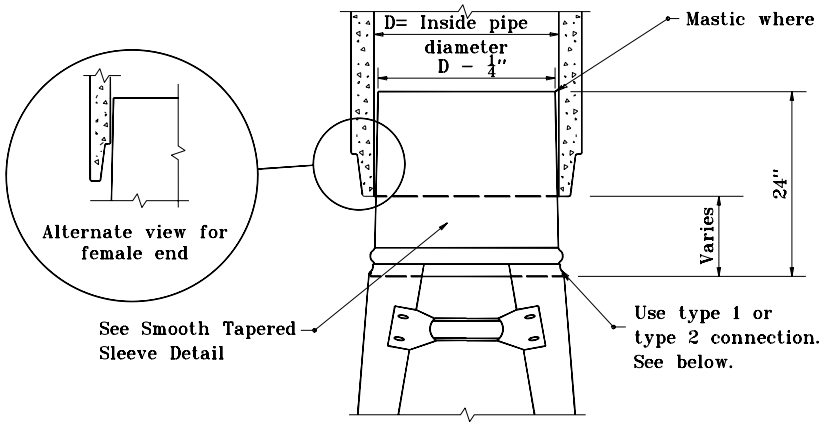

TAPERED SLEEVE FOR ATTACHING STEEL END SECTION TO SMOOTH INTERIOR PIPE

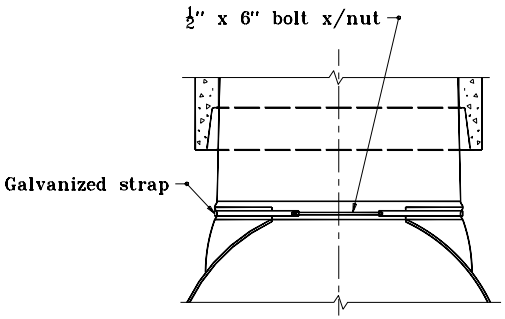

TYPE 1 CONNECTOR DETAIL
for all circular pipes through 24"

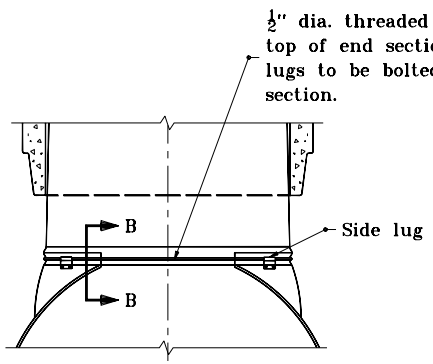

TYPE 2 CONNECTOR DETAIL
all circular pipes larger than 24" and all horizontal elliptical pipes

INDIANA DEPARTMENT OF TRANSPORTATION

SAFETY METAL CULVERT END SECTIONS FOR SMOOTH PIPE

JANUARY 1998

STANDARD DRAWING NO. **E 715-SMES-08**

ANTHONY L. UREMOVICH REGISTERED No. 18095 STATE OF INDIANA PROFESSIONAL ENGINEER

DESIGN STANDARDS ENGINEER

DETAILS PLACED IN THIS FORMAT 7-27-99

/s/ Anthony L. Uremovich 7-27-99
DESIGN STANDARDS ENGINEER DATE

/s/ Firooz Zandi 7-27-99
CHIEF HIGHWAY ENGINEER DATE

ORIGINALLY APPROVED 1-02-98

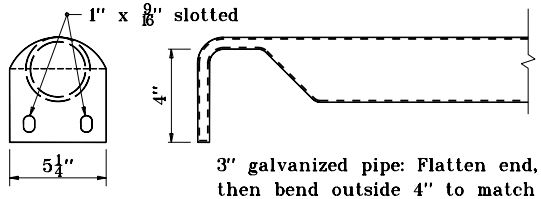

3" galvanized pipe: Flatten end, then bend outside 4" to match end section sides.

OR

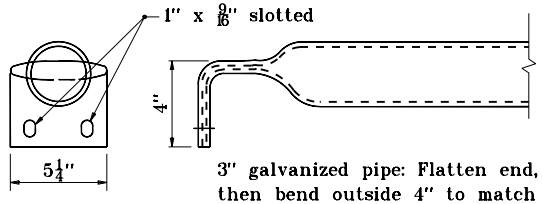

3" galvanized pipe: Flatten end, then bend outside 4" to match end section sides.

TRANSVERSE SAFETY BAR DETAILS

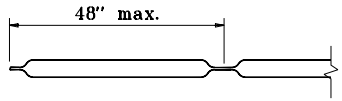

LONGITUDINAL SAFETY BAR DETAIL

INDIANA DEPARTMENT OF TRANSPORTATION

SAFETY METAL CULVERT END SECTIONS FOR SMOOTH PIPE

JANUARY 1998

STANDARD DRAWING NO. E 715-SMES-09

ANTHONY L. UREMOVICH REGISTERED No. 18095 STATE OF INDIANA PROFESSIONAL ENGINEER

DESIGN STANDARDS ENGINEER

DETAILS PLACED IN THIS FORMAT 7-27-99

/s/ Anthony L. Uremovich 7-27-99
DESIGN STANDARDS ENGINEER DATE

/s/ Firooz Zandi 7-27-99
CHIEF HIGHWAY ENGINEER DATE

ORIGINALLY APPROVED 1-02-98

GENERAL NOTES

(1) Toe plate extension is to be the same thickness as the end section. Dimension shall be end section overall width less 6".

(2) Transverse safety bars shall be Schedule 40 galvanized steel pipe. Pipe to be galvanized after forming. Number of bars req'd will vary depending on the length of the end section.

(3) See Standard Drawing E 715-SMES-11 for Section A-A.

4. See Standard Drawing E 715-SMES-12 for variable dimensions.

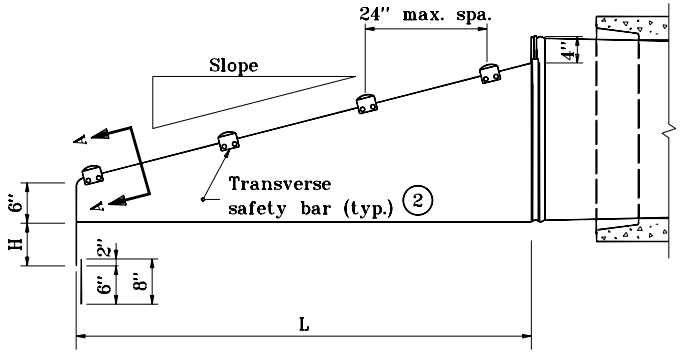

SIDE ELEVATION OF PARALLEL STRUCTURE END SECTION

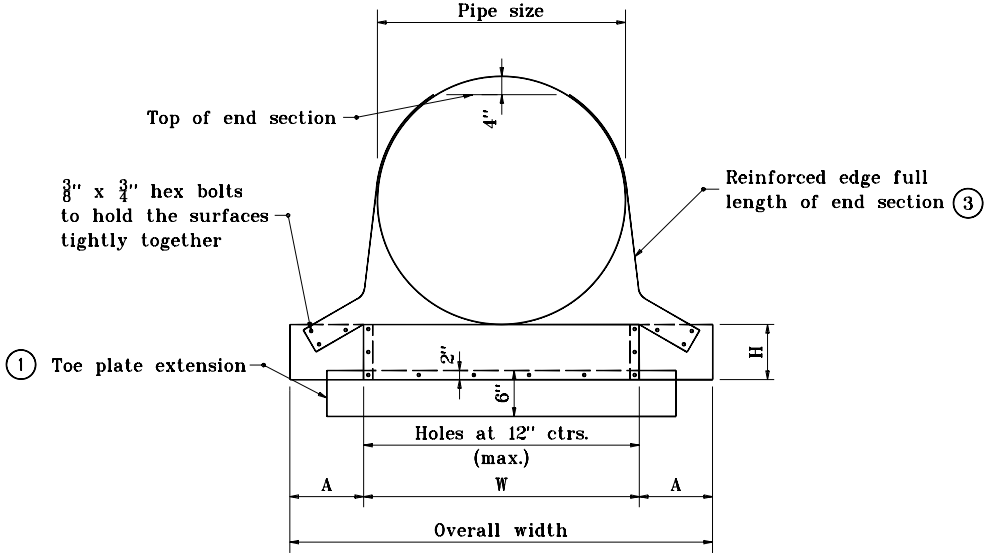

FRONT VIEW

INDIANA DEPARTMENT OF TRANSPORTATION

SAFETY METAL CULVERT END SECTIONS FOR SMOOTH PIPE

JANUARY 1998

STANDARD DRAWING NO. **E 715-SMES-10**

ANTHONY L. UREMOVICH REGISTERED No. 18095 STATE OF INDIANA PROFESSIONAL ENGINEER

DESIGN STANDARDS ENGINEER

DETAILS PLACED IN THIS FORMAT 7-27-99

/s/ Anthony L. Uremovich 7-27-99
DESIGN STANDARDS ENGINEER DATE

/s/ Firooz Zandi 7-27-99
CHIEF HIGHWAY ENGINEER DATE

ORIGINALLY APPROVED 1-02-98

GENERAL NOTES

(1) Toe plate extension is to be the same thickness as the end section. Dimensions shall be overall width less 6", by 8" high.

(2) Transverse safety bars shall be Schedule 40 galvanized steel pipe. Pipe to be galvanized after forming. Number of bars req'd. will vary depending on the length of the end section.

3. Slotted holes for safety bar attachment shall be provided for all end sections.

4. See Standard Drawing E 715-SMES-12 for variable dimensions.

(5) See Standard Drawing E 715-SMES-07 for warrant of longitudinal safety bar.

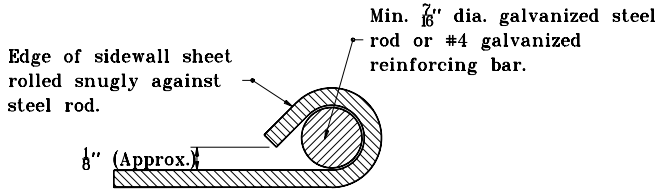

SECTION A-A

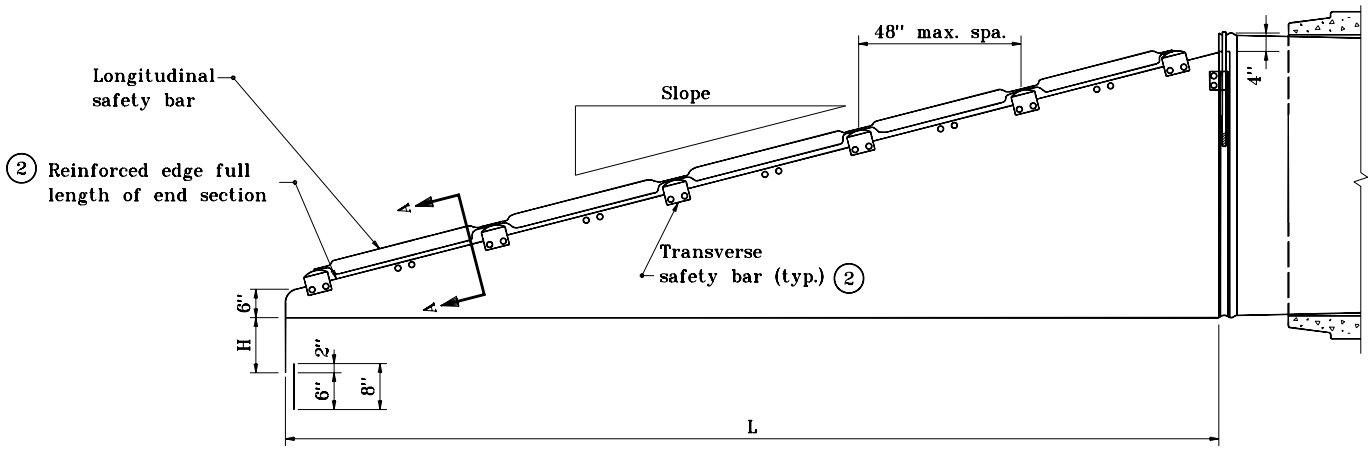

SIDE ELEVATION FOR CROSS STRUCTURE END SECTION

INDIANA DEPARTMENT OF TRANSPORTATION

SAFETY METAL CULVERT END SECTIONS FOR SMOOTH PIPE

JANUARY 1998

STANDARD DRAWING NO. **E 715-SMES-11**

ANTHONY L. UREMOVICH REGISTERED No. 18095 STATE OF INDIANA PROFESSIONAL ENGINEER

DESIGN STANDARDS ENGINEER

DETAILS PLACED IN THIS FORMAT 7-27-99

/s/ Anthony L. Uremovich 7-27-99
DESIGN STANDARDS ENGINEER DATE

/s/ Firooz Zandi 7-27-99
CHIEF HIGHWAY ENGINEER DATE

ORIGINALLY APPROVED 1-02-98

SAFETY METAL END SECTIONS FOR CIRCULAR PIPES									
Pipe Dia. (in.)	Min. Thick.	Dimensions, in.				L Dimensions			
		A	H	W	Overall Width	Slope	Length (in.)	Slope	Length (in.)
15	.064	8	6	21	37	4:1	20	6:1	30
18	.064	8	6	24	40	4:1	32	6:1	48
21	.064	8	6	27	43	4:1	44	6:1	66
24	.064	8	6	30	46	4:1	56	6:1	84
27	.109	12	9	33	57	4:1	68	6:1	102
30	.109	12	9	36	60	4:1	80	6:1	120
33	.109	12	9	39	63	4:1	92	6:1	138
36	.109	12	9	42	66	4:1	104	6:1	156
42	.109	16	12	48	80	4:1	128	6:1	192
48	.109	16	12	54	86	4:1	152	6:1	228
54	.109	16	12	60	92	4:1	176	6:1	264
60	.109	16	12	66	98	4:1	200	6:1	300

SAFETY METAL END SECTIONS FOR HORIZONTAL ELLIPTICAL PIPE											
Equiv. Dia. (in.)	(inches)		Min. Thick.	Dimensions (inches)				L Dimension			
	Span	Rise	in.	A	H	W	Overall Width	Slope	Length (in.)	Slope	Length (in.)
18	23	14	.064	8	6	29	45	4:1	16	6:1	24
24	30	19	.064	8	6	36	52	4:1	36	6:1	54
27	34	22	.079	12	9	40	64	4:1	48	6:1	72
30	38	24	.079	12	9	44	68	4:1	56	6:1	84
33	42	27	.109	12	9	48	72	4:1	68	6:1	102
36	45	29	.109	16	12	51	83	4:1	76	6:1	114
42	53	34	.109	16	12	59	91	4:1	96	6:1	144
48	60	38	.109	16	12	66	98	4:1	112	6:1	168
54	68	43	.109	16	12	74	106	4:1	132	6:1	198
60	76	48	.109	16	12	80	112	4:1	152	6:1	228

INDIANA DEPARTMENT OF TRANSPORTATION

SAFETY METAL CULVERT END SECTIONS FOR SMOOTH PIPE

JANUARY 1998

STANDARD DRAWING NO. **E 715-SMES-12**

ANTHONY L. UREMOVICH REGISTERED No. 18095 STATE OF INDIANA PROFESSIONAL ENGINEER

DESIGN STANDARDS ENGINEER

DETAILS PLACED IN THIS FORMAT 11-15-99

/s/ Anthony L. Uremovich 11-15-99
DESIGN STANDARDS ENGINEER DATE

/s/ Firooz Zandi 11-15-99
CHIEF HIGHWAY ENGINEER DATE

ORIGINALLY APPROVED 1-02-98

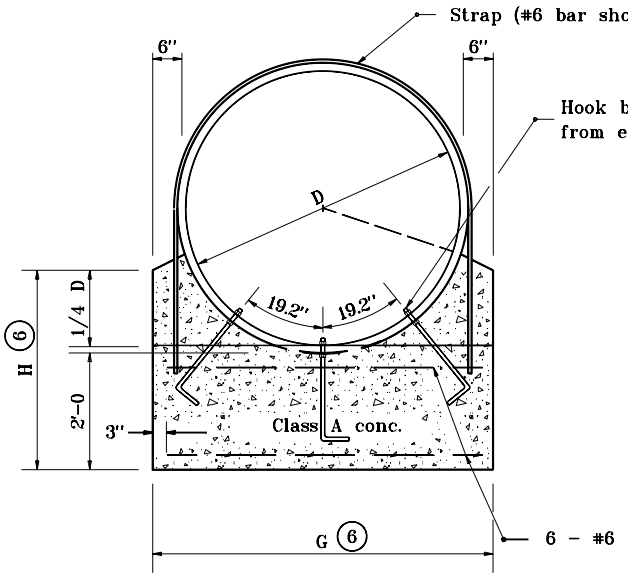

ANCHOR FOR CIRCULAR CORRUGATED METAL PIPE
FRONT ELEVATION

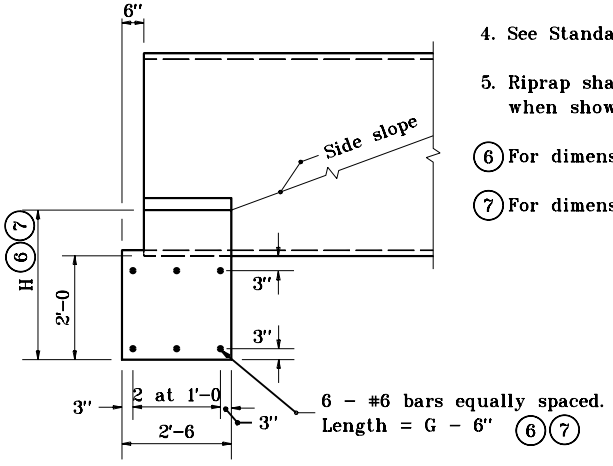

SIDE ELEVATION

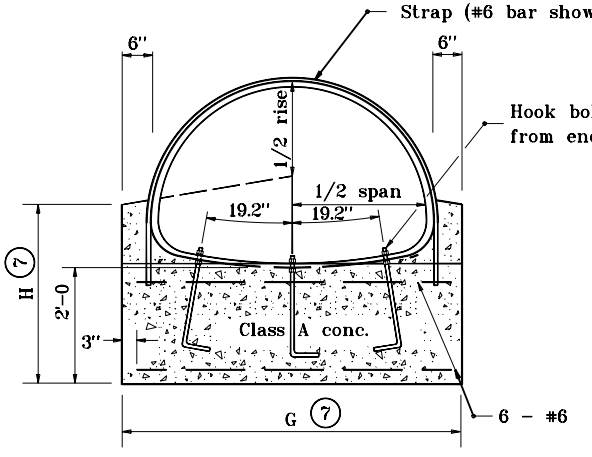

ANCHOR FOR CORRUGATED METAL PIPE-ARCH
FRONT ELEVATION

GENERAL NOTES

1. Anchor straps shall be used at both upstream and downstream ends of all C.M. pipes with a diameter or span of 42" or greater.
2. See Standard Drawing E 715-PASD-01 for anchor strap details.
3. Hook bolts and anchor straps shall be used for all C.M. pipes with a diameter or span of 84" or greater.
4. See Standard Drawing E 715-PAHB-01 for hook bolt details.
5. Riprap shall be placed at the ends of pipe structures when shown on plans.

(6) For dimension chart see Standard Drawing E 715-ANCH-01.

(7) For dimension chart see Standard Drawing E 715-ANCH-02.

LEGEND

C.M. = Corrugated Metal

INDIANA DEPARTMENT OF TRANSPORTATION

SINGLE PIPE CONCRETE ANCHOR

JANUARY 1998

STANDARD DRAWING NO. **E 715-SPCA-01**

ANTHONY L. UREMOVICH REGISTERED No. 18095 STATE OF INDIANA PROFESSIONAL ENGINEER

DESIGN STANDARDS ENGINEER

DETAILS PLACED IN THIS FORMAT	7-27-99
/s/ Anthony L. Uremovich, DESIGN STANDARDS ENGINEER	7-27-99
/s/ Firooz Zandi, CHIEF HIGHWAY ENGINEER	7-27-99
ORIGINALLY APPROVED	1-02-98

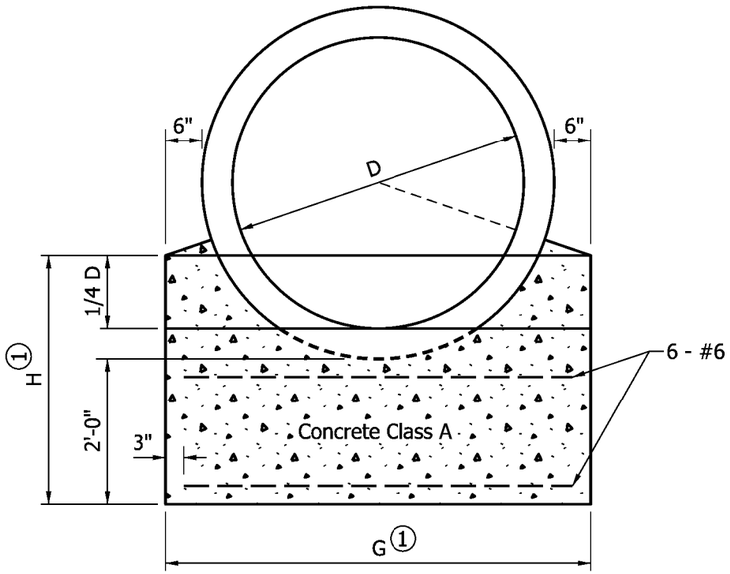

ANCHOR FOR
REINFORCED CONCRETE PIPE

FRONT ELEVATION

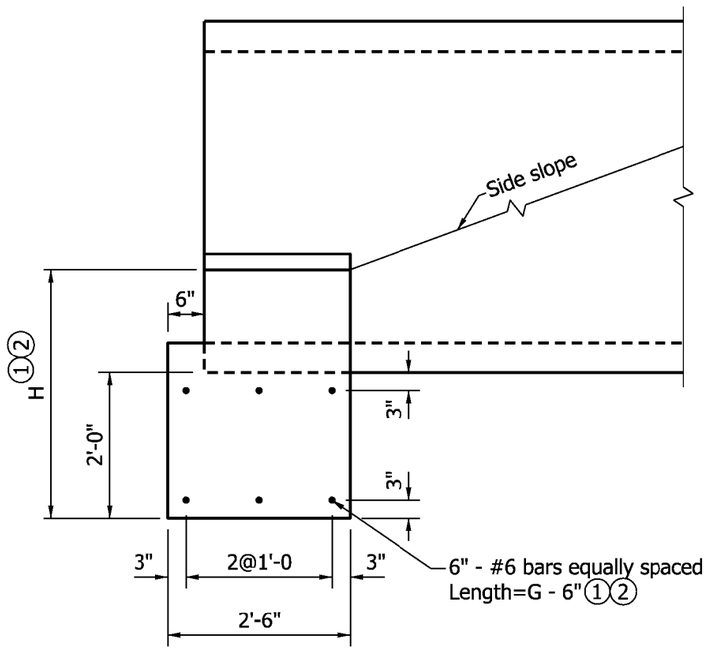

SIDE ELEVATION

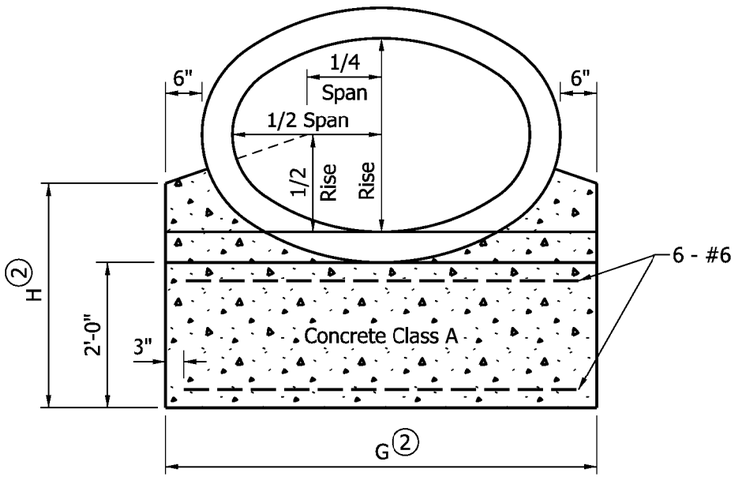

ANCHOR FOR
REINFORCED CONCRETE HORIZONTAL ELLIPTICAL PIPE

FRONT ELEVATION

GENERAL NOTES

(1) For dimension, enter chart on Standard Drawing E 715-ANCH-01 with known dimension D.

(2) For dimension enter chart on Standard Drawing E 715-ANCH-02 with known span and rise.

3. Riprap shall be placed at the ends of pipe structures when shown on plans.

INDIANA DEPARTMENT OF TRANSPORTATION

SINGLE PIPE
CONCRETE ANCHOR

SEPTEMBER 2009

STANDARD DRAWING NO. E 715-SPCA-02

RICHARD L. VanCLEAVE
REGISTERED
No. 9750
STATE OF INDIANA
PROFESSIONAL ENGINEER

DESIGN STANDARDS ENGINEER

/s/ Richard L. VanCleave 09/01/09
DESIGN STANDARDS ENGINEER DATE

/s/ Mark A. Miller 09/01/09
CHIEF HIGHWAY ENGINEER DATE

STEEL STRUCTURAL PLATE PIPE-ARCH

SPAN	RISE	H	R	S	SINGLE PIPE		DOUBLE PIPE		TRIPLE PIPE	
					G	CU.YDS. CONC. 2 ANCHORS	G	CU.YDS. CONC. 2 ANCHORS	G	CU.YDS. CONC. 2 ANCHORS
6'-1	4'-7	3'-11	3'-7½	9'-6	7'-5	3.5	16'-11	8.4	26'-5	13.3
6'-4	4'-9	3'-11	3'-10	9'-10	7'-8	3.6	17'-5	8.6	27'-4	13.6
6'-9	4'-11	4'-0	4'-0½	10'-6	8'-1	3.8	18'-7	9.3	29'-1	14.8
7'-0	5'-1	4'-0	4'-2	10'-10	8'-4	3.9	19'-2	9.5	30'-0	15.1
7'-3	5'-3	3'-11	4'-3½	11'-3	8'-7	4.0	19'-10	9.7	31'-1	15.4
7'-8	5'-5	4'-0	4'-6	11'-10	9'-0	4.2	20'-10	10.4	32'-8	16.5
7'-11	5'-7	4'-0	4'-7½	12'-3	9'-3	4.3	21'-6	10.6	33'-9	16.9
8'-2	5'-9	3'-11	4'-9	12'-6	9'-6	4.4	22'-0	10.7	34'-6	17.0
8'-7	5'-11	4'-1	4'-11½	12'-11	9'-11	4.6	22'-10	11.3	35'-9	18.0
8'-10	6'-1	4'-0	5'-1	13'-2	10'-2	4.7	23'-4	11.4	36'-6	18.1
9'-4	6'-3	4'-2	5'-4	13'-8	10'-8	5.0	24'-4	12.1	38'-0	19.3
9'-6	6'-5	4'-1	5'-5	13'-10	10'-10	5.0	24'-8	12.1	38'-6	19.2
9'-9	6'-7	4'-0	5'-6½	14'-1	11'-1	5.1	25'-2	12.1	39'-3	19.2
10'-3	6'-9	4'-2	5'-9½	14'-7	11'-7	5.4	26'-2	12.9	40'-9	20.4
10'-8	6'-11	4'-4	6'-0	15'-0	12'-0	5.8	27'-0	13.7	42'-0	21.6
10'-11	7'-1	4'-3	6'-1½	15'-3	12'-3	5.8	27'-6	13.7	42'-9	21.6
11'-5	7'-3	4'-6	6'-4½	15'-9	12'-9	6.2	28'-6	14.6	44'-3	23.0
11'-7	7'-5	4'-5	6'-5½	15'-11	12'-11	6.2	28'-10	14.5	44'-9	22.9
11'-10	7'-7	4'-3	6'-7	16'-2	13'-2	6.2	29'-4	14.5	45'-6	22.8
12'-4	7'-9	4'-6	6'-10	16'-8	13'-8	6.6	30'-4	15.4	47'-0	24.3
12'-6	7'-11	4'-4	6'-11	16'-10	13'-10	6.6	30'-8	15.3	47'-6	24.0
12'-8	8'-1	4'-3	7'-0	17'-0	14'-0	6.5	31'-0	15.2	48'-0	23.8
12'-10	8'-4	4'-2	7'-1	17'-2	14'-2	6.5	31'-4	15.1	48'-6	23.7
13'-3	9'-4	5'-0	7'-3½	17'-7	14'-7	7.3	32'-2	17.1	49'-9	26.9
13'-6	9'-6	5'-0	7'-5	17'-10	14'-10	7.4	32'-8	17.2	50'-6	27.0
14'-0	9'-8	5'-0	7'-8	18'-4	15'-4	7.7	33'-8	17.9	52'-0	28.1
14'-2	9'-10	5'-0	7'-9	18'-6	15'-6	7.7	34'-0	17.9	52'-6	28.1
14'-5	10'-0	5'-0	7'-10½	18'-9	15'-9	7.8	34'-6	18.0	53'-3	28.2
14'-11	10'-2	5'-2	8'-1½	19'-3	16'-3	8.2	35'-6	18.9	54'-9	29.6
15'-4	10'-4	5'-2	8'-4	19'-8	16'-8	8.6	36'-4	19.6	56'-0	30.7
15'-7	10'-6	5'-2	8'-5½	19'-11	16'-11	8.6	36'-10	19.7	56'-9	30.8
15'-10	10'-8	5'-2	8'-7	20'-2	17'-2	8.6	37'-4	19.7	57'-6	30.9
16'-3	10'-10	5'-2	8'-9½	20'-7	17'-7	9.0	38'-2	20.5	58'-9	32.0
16'-6	11'-0	5'-5	8'-11	20'-10	17'-10	9.1	38'-8	20.7	59'-6	32.4
17'-0	11'-2	5'-5	9'-2	21'-4	18'-4	9.5	39'-8	21.6	61'-0	33.7
17'-2	11'-4	5'-5	9'-3	21'-6	18'-6	9.5	40'-0	21.5	61'-6	33.6
17'-5	11'-6	5'-5	9'-4½	21'-9	18'-9	9.5	40'-6	21.6	62'-3	33.7
17'-11	11'-8	5'-5	9'-7½	22'-3	19'-3	9.9	41'-6	22.5	63'-9	35.0
18'-1	11'-10	5'-6	9'-8½"	22'-5	19'-5	9.9	41'-10	22.7	64'-3	35.4
18'-7	12'-0	5'-6	9'-11½"	22'-11	19'-11	10.3	42'-10	23.4	65'-9	36.7
18'-9	12'-2	5'-6	10'-0½"	23'-1	20'-1	10.3	43'-2	23.6	66'-3	36.7
19'-3	12'-4	5'-6	10'-3½"	23'-7	20'-7	10.8	44'-2	24.6	67'-9	38.8
19'-6	12'-6	5'-6	10'-5	23'-10	20'-10	10.8	44'-8	24.6	68'-6	38.2
19'-8	12'-8	5'-6	10'-6	24'-0	21'-0	10.7	45'-0	24.4	69'-0	37.9
19'-11	12'-10	5'-6	10'-7½"	24'-3	21'-3	10.7	45'-6	24.2	69'-9	37.7
20'-5	13'-0	5'-6	10'-10½"	24'-9	21'-9	11.2	46'-5	25.4	71'-3	39.4
20'-7	13'-2	5'-6	10'-11½"	24'-11	21'-11	11.1	46'-10	25.3	71'-9	39.5

INDIANA DEPARTMENT OF TRANSPORTATION

CONCRETE ANCHOR TABLES

JANUARY 1998

STANDARD DRAWING NO. E 717-ANCH-01

ANTHONY L. UREMOVICH REGISTERED No. 18095 STATE OF INDIANA PROFESSIONAL ENGINEER

DESIGN STANDARDS ENGINEER

DETAILS PLACED IN THIS FORMAT 11-15-99

/s/ Anthony L. Uremovich 11-15-99
DESIGN STANDARDS ENGINEER DATE

/s/ Firooz Zandi 11-15-99
CHIEF HIGHWAY ENGINEER DATE

ORIGINALLY APPROVED 1-02-98

STEEL OR ALUMINUM ALLOY STRUCTURAL PLATE PIPE

D	H	R	S	SINGLE PIPE		DOUBLE PIPE		TRIPLE PIPE	
				G	CU.YDS. CONC. 2 ANCHORS	G	CU.YDS. CONC. 2 ANCHORS	G	CU.YDS. CONC. 2 ANCHORS
5'-0	3'-5	3'-2	7'-10	6'-4	3.1	14'-2	7.1	22'-0	11.0
5'-6	3'-7	3'-5	8'-7	6'-10	3.4	15'-5	7.9	24'-0	12.4
6'-0	3'-8	3'-8	9'-4	7'-4	3.7	16'-8	8.6	26'-0	13.6
6'-6	3'-10	3'-11	10'-1	7'-10	4.1	17'-11	9.5	28'-0	15.0
7'-0	3'-11	4'-2	10'-10	8'-4	4.3	19'-2	10.3	30'-0	16.2
7'-6	4'-1	4'-5	11'-7	8'-10	4.7	20'-5	11.3	32'-0	17.8
8'-0	4'-2	4'-8	12'-4	9'-4	5.0	21'-8	12.1	34'-0	19.1
8'-6	4'-4	4'-11	12'-10	9'-10	5.4	22'-8	12.9	35'-6	20.4
9'-0	4'-5	5'-2	13'-4	10'-4	5.7	23'-8	13.5	37'-0	21.4
9'-6	4'-7	5'-5	13'-10	10'-10	6.1	24'-8	14.4	38'-6	22.7
10'-0	4'-8	5'-8	14'-4	11'-4	6.4	25'-8	15.1	40'-0	23.7
10'-6	4'-10	5'-11	14'-10	11'-10	6.8	26'-8	16.0	41'-6	25.2
11'-0	4'-11	6'-2	15'-4	12'-4	7.2	27'-8	16.7	43'-0	26.2
11'-6	5'-1	6'-5	15'-10	12'-10	7.6	28'-8	17.6	44'-6	27.7
12'-0	5'-2	6'-8	16'-4	13'-4	7.9	29'-8	18.3	46'-0	28.7
12'-6	5'-4	6'-11	16'-10	13'-10	8.4	30'-8	19.3	47'-6	30.3
13'-0	5'-5	7'-2	17'-4	14'-4	8.7	31'-8	20.0	49'-0	31.3
13'-6	5'-7	7'-5	17'-10	14'-10	9.2	32'-8	21.1	50'-6	32.9
14'-0	5'-8	7'-8	18'-4	15'-4	9.6	33'-8	21.8	52'-0	34.0
14'-6	5'-10	7'-11	18'-10	15'-10	10.1	34'-8	22.9	53'-6	35.7
15'-0	5'-11	8'-2	19'-4	16'-4	10.4	35'-8	23.6	55'-0	36.8
15'-6	6'-1	8'-5	19'-10	16'-10	10.9	36'-8	24.7	56'-6	38.5
16'-0	6'-2	8'-8	20'-4	17'-4	11.3	37'-8	25.5	58'-0	39.7
16'-6	6'-4	8'-11	20'-10	17'-10	11.9	38'-8	26.7	59'-0	41.5
17'-0	6'-5	9'-2	21'-4	18'-4	12.3	39'-8	27.5	61'-0	42.7
17'-6	6'-7	9'-5	21'-10	18'-10	12.8	40'-8	28.6	62'-6	44.5
18'-0	6'-8	9'-8	22'-4	19'-4	13.2	41'-8	29.5	64'-0	45.7
18'-6	6'-10	9'-11	22'-10	19'-10	13.8	42'-8	30.7	65'-6	47.6
19'-0	6'-11	10'-2	23'-4	20'-4	14.2	43'-8	31.5	67'-0	48.8
19'-6	7'-1	10'-5	23'-10	20'-10	14.8	44'-8	32.8	68'-6	50.8
20'-0	7'-2	10'-8	24'-4	21'-4	15.2	45'-8	33.6	70'-0	52.1
20'-6	7'-4	10'-11	24'-10	21'-10	15.8	46'-8	34.9	71'-6	54.2
21'-0	7'-5	11'-2	25'-4	22'-4	16.2	47'-8	35.8	73'-0	55.6

GENERAL NOTES

1. Refer to Standard Drawing E 717-SPCA-01 for single pipe anchor details.
2. Refer to Standard Drawings E 717-MPCA-01 and E 717-MPCA-02 for multiple pipe anchor details.

INDIANA DEPARTMENT OF TRANSPORTATION

CONCRETE ANCHOR TABLES

JANUARY 1998

STANDARD DRAWING NO. **E 717-ANCH-02**

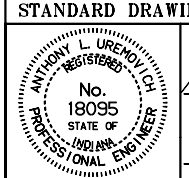

DESIGN STANDARDS ENGINEER

DETAILS PLACED IN THIS FORMAT 11-15-99

/s/ Anthony L. Uremovich 11-15-99
DESIGN STANDARDS ENGINEER DATE

/s/ Firooz Zandi 11-15-99
CHIEF HIGHWAY ENGINEER DATE

ORIGINALLY APPROVED 1-02-98

ALUMINUM ALLOY STRUCTURAL PLATE PIPE-ARCH

SPAN	RISE	H	R	S	SINGLE PIPE		DOUBLE PIPE		TRIPLE PIPE	
					G	CU.YDS. CONC. 2 ANCHORS	G	m^3 CONC., 2 ANCHORS	G	m^3 CONC., 2 ANCHORS
6'-7	5'-8	5'-0	4'-0	10'-4	8'-0	4.2	18'-4	10.3	28'-8	16.4
6'-11	5'-9	5'-0	4'-2	10'-10	8'-4	4.3	19'-2	10.7	30'-0	17.1
7'-3	5'-11	5'-0	4'-4	11'-4	8'-8	4.4	20'-0	11.1	31'-4	17.7
7'-9	6'-0	5'-0	4'-7	12'-1	9'-2	4.8	21'-3	11.9	33'-4	19.1
8'-1	6'-1	5'-0	4'-9	12'-6	9'-6	4.9	22'-0	12.2	34'-6	19.6
8'-5	6'-3	5'-2	4'-11	12'-10	9'-10	5.0	22'-8	12.6	35'-6	20.1
8'-10	6'-4	5'-2	5'-1½	13'-3	10'-3	5.3	23'-6	13.2	36'-9	21.1
9'-3	6'-5	5'-2	5'-4	13'-8	10'-8	5.5	24'-4	13.5	38'-0	21.6
9'-7	6'-6	5'-2	5'-6	14'-0	11'-0	5.6	25'-0	13.7	39'-0	21.9
9'-11	6'-8	5'-2	5'-8	14'-4	11'-4	5.7	25'-8	13.9	40'-0	22.2
10'-3	6'-9	5'-2	5'-10	14'-8	11'-8	5.8	26'-4	14.1	41'-0	22.4
10'-9	6'-10	5'-5	6'-1	15'-2	12'-2	6.3	27'-4	15.2	42'-6	24.2
11'-1	7'-0	5'-5	6'-3	15'-6	12'-6	6.4	28'-0	15.4	43'-6	24.4
11'-5	7'-1	5'-5	6'-5	15'-10	12'-10	6.4	28'-8	15.5	44'-6	24.6
11'-9	7'-2	5'-5	6'-7	16'-2	13'-2	6.5	29'-4	15.7	45'-6	24.8
12'-3	7'-3	5'-6	6'-10	16'-8	13'-8	7.1	30'-4	16.8	47'-0	26.6
12'-7	7'-5	5'-6	7'-0	17'-0	14'-0	7.1	31'-0	16.9	48'-0	26.8
12'-11	7'-6	5'-6	7'-2	17'-4	14'-4	7.2	31'-8	17.1	49'-0	26.9
13'-1	8'-2	5'-6	7'-3	17'-6	14'-6	7.7	32'-0	18.1	49'-6	28.5
13'-1	8'-4	5'-6	7'-3	17'-6	14'-6	7.2	32'-0	17.1	49'-6	26.9
13'-11	8'-5	5'-9	7'-8	18'-4	15'-4	8.5	33'-8	19.7	52'-0	31.0
14'-0	8'-7	5'-9	7'-8½	18'-5	15'-5	7.9	33'-10	18.7	52'-3	29.4
13'-11	9'-5	5'-9	7'-8	18'-4	15'-4	8.2	33'-8	19.2	52'-0	30.2
14'-3	9'-7	5'-9	7'-10	18'-8	15'-8	8.3	34'-4	19.4	53'-0	30.5
14'-8	9'-8	5'-9	8'-0½	19'-1	16'-1	8.6	35'-2	20.1	54'-3	31.5
14'-11	9'-10	5'-9	8'-2	19'-4	16'-4	8.7	35'-8	20.2	55'-0	31.7
15'-4	10'-0	6'-0	8'-4½	19'-9	16'-9	9.1	36'-6	21.1	56'-3	33.1
15'-7	10'-2	6'-0	8'-6	20'-0	17'-0	9.1	37'-0	21.2	57'-0	33.2
16'-1	10'-4	6'-0	8'-9	20'-6	17'-6	9.6	38'-0	22.1	58'-6	34.5
16'-4	10'-6	6'-0	8'-10½	20'-9	17'-9	9.6	38'-6	22.1	59'-3	34.6
16'-9	10'-8	6'-0	9'-1	21'-2	18'-2	10.0	39'-4	22.9	60'-6	35.8
17'-0	10'-10	6'-0	9'-2½	21'-5	18'-5	10.0	39'-10	22.9	61'-3	35.9
17'-3	11'-0	6'-0	9'-4	21'-8	18'-8	10.0	40'-4	23.0	62'-0	35.9
17'-9	11'-2	6'-0	9'-7	22'-2	19'-2	10.5	41'-4	24.1	63'-6	37.7
18'-0	11'-4	6'-3	9'-8½"	22'-5	19'-5	10.6	41'-10	24.3	64'-3	38.0
18'-5	11'-6	6'-3	9'-11	22'-10	19'-10	11.0	42'-8	25.2	65'-6	39.5
18'-8	11'-8	6'-3	10'-0½"	23'-1	20'-1	11.0	43'-2	25.2	66'-3	39.4
19'-2	11'-9	6'-3	10'-3½"	23'-7	20'-7	11.5	44'-2	26.1	67'-9	40.7
19'-5	11'-11	6'-3	10'-5	23'-10	20'-10	11.5	44'-8	26.2	68'-6	40.9
19'-10	12'-1	6'-3	10'-7½"	24'-3	21'-3	12.0	45'-6	27.2	69'-9	42.5
20'-1	12'-3	6'-3	10'-9	24'-6	21'-6	12.0	46'-0	27.1	70'-6	42.3
20'-1	12'-6	6'-3	10'-9	24'-6	21'-6	11.4	46'-0	25.8	70'-6	40.1
20'-10	12'-7	6'-6	11'-1½"	25'-3	22'-3	12.5	47'-6	28.3	72'-9	44.0
21'-1	12'-9	6'-6	11'-3	25'-6	22'-6	12.5	48'-0	28.1	73'-6	43.8
21'-6	12'-11	6'-6	11'-5½"	25'-11	22'-11	13.0	48'-10	29.4	74'-9	45.9

GENERAL NOTES

1. Refer to Standard Drawing E 717-SPCA-01 for single pipe anchor details.

2. Refer to Standard Drawings E 717-MPCA-01 and E 717-MPCA-02 for multiple pipe anchor details.

INDIANA DEPARTMENT OF TRANSPORTATION

CONCRETE ANCHOR TABLES

JANUARY 1998

STANDARD DRAWING NO. E 717-ANCH-03

ANTHONY L. UREMOVICH REGISTERED No. 18095 STATE OF INDIANA PROFESSIONAL ENGINEER

DESIGN STANDARDS ENGINEER

DETAILS PLACED IN THIS FORMAT 11-15-99

/s/ Anthony L. Uremovich 11-15-99
DESIGN STANDARDS ENGINEER DATE

/s/ Firooz Zandi 11-15-99
CHIEF HIGHWAY ENGINEER DATE

ORIGINALLY APPROVED 1-02-98

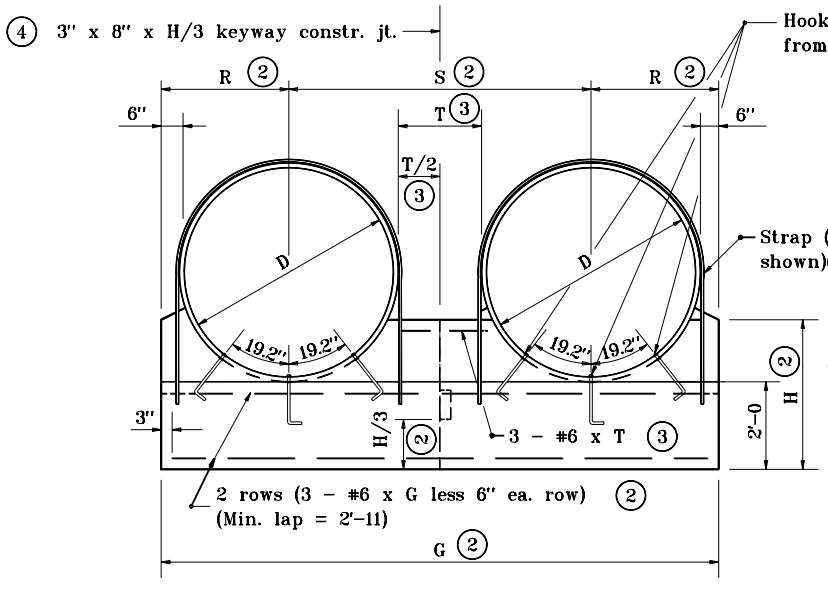

ANCHOR FOR DOUBLE PIPE INSTALLATION
FRONT ELEVATION

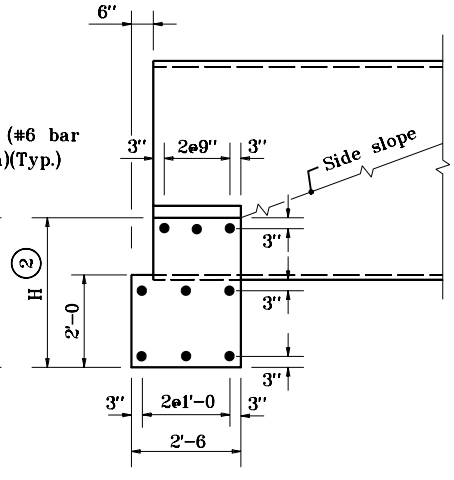

SECTION THROUGH ANCHOR

GENERAL NOTES

1. Circular pipes shown. For details of structural plate pipe-arches alternates, see partial elevations on Standard Drawing E 717-MPCA-02.

(2) For dimension, enter chart on Standard Drawing E 717-ANCH-01 with known dimension D.

(3) T = Clear distance between pipes.
For D less than 48", T = 2'-0.
For D of 48" to 96" T = 1/2 D
For D greater than 96", T = 4'-0.

(4) No joint required if G is less than or equal to 30'. One joint required if G is greater than 30' but less than or equal to 42'. Two joints required if G is greater than 42'.

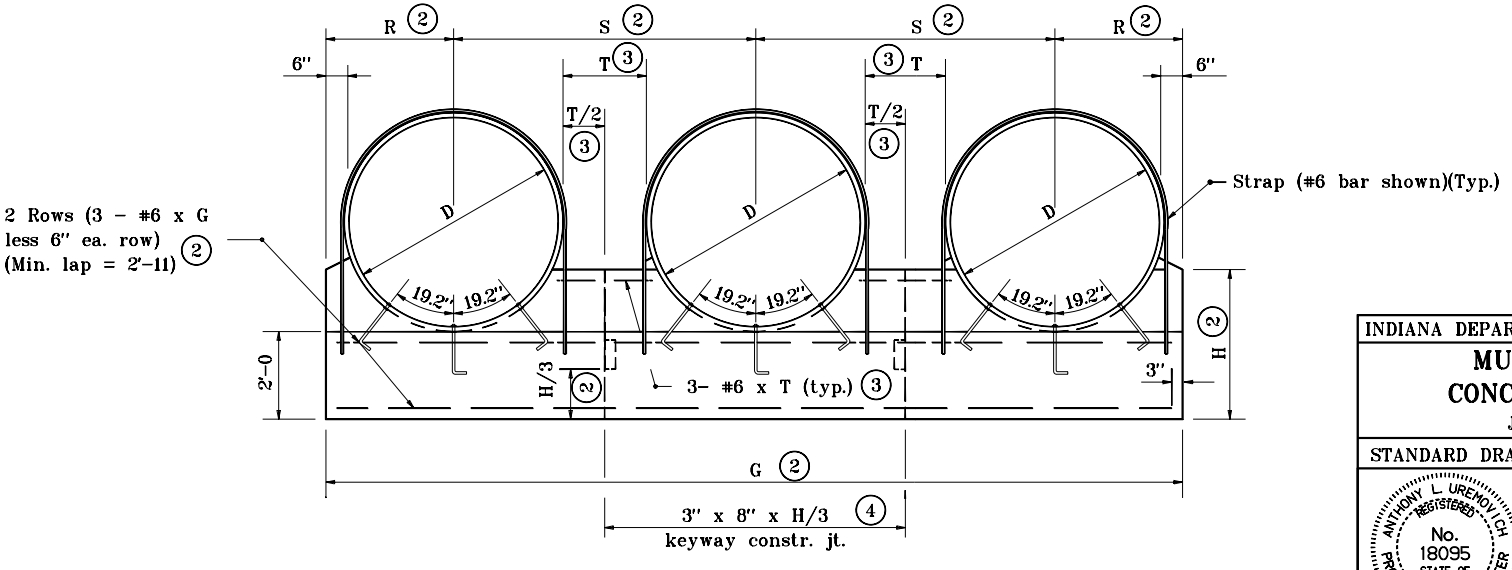

ANCHOR FOR TRIPLE PIPE INSTALLATION
FRONT ELEVATION

INDIANA DEPARTMENT OF TRANSPORTATION

MULTIPLE PIPE CONCRETE ANCHOR

JANUARY 1998

STANDARD DRAWING NO. **E 717-MPCA-01**

ANTHONY L. UREMOVICH REGISTERED No. 18095 STATE OF INDIANA PROFESSIONAL ENGINEER

DESIGN STANDARDS ENGINEER

DETAILS PLACED IN THIS FORMAT 7-27-99

/s/ Anthony L. Uremovich 7-27-99
DESIGN STANDARDS ENGINEER DATE

/s/ Firooz Zandi 7-27-99
CHIEF HIGHWAY ENGINEER DATE

ORIGINALLY APPROVED 1-02-98

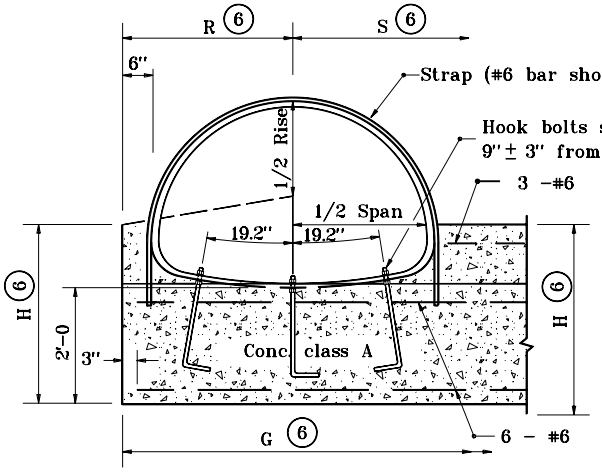

ANCHOR FOR STRUCTURAL PLATE PIPE-ARCH
PARTIAL ELEVATION

GENERAL NOTES

1. Anchor straps shall be used at both upstream and downstream ends of all structural plate pipes and pipe-arches.
2. See Standard Drawing E 715-PASD-01 for anchor strap details.
3. Hook bolts and anchor straps shall be used for all structural plate pipes and pipe-arches with a diameter or span of 84" or greater.
4. See Standard Drawing E 715-PAHB-01 for hook bolt details.
5. Riprap shall be placed at the ends of pipe structures when shown on the plans.

(6) For dimension, enter chart on Standard Drawings E 717-ANCH-01 or E 717-ANCH-02 with known dimension D or span and rise.

INDIANA DEPARTMENT OF TRANSPORTATION

MULTIPLE PIPE CONCRETE ANCHOR

JANUARY 1998

STANDARD DRAWING NO. **E 717-MPCA-02**

ANTHONY L. UREMOVICH REGISTERED No. 18095 STATE OF INDIANA PROFESSIONAL ENGINEER

DESIGN STANDARDS ENGINEER

DETAILS PLACED IN THIS FORMAT 7-27-99

/s/ Anthony L. Uremovich 7-27-99
DESIGN STANDARDS ENGINEER DATE

/s/ Firooz Zandi 7-27-99
CHIEF HIGHWAY ENGINEER DATE

ORIGINALLY APPROVED 1-02-98

9" x 2½" STRUCTURAL PLATE ALUMINUM ALLOY PIPE (STEEL BOLTED)
HEIGHT OF COVER LIMITS (ft.)

	AREA (sft)	DIAMETER (in.)	THICKNESS (in.)										
			0.100		0.125		0.150		0.175		0.200		
			MIN.	MAX.	MIN.	MAX.	MIN.	MAX.	MIN.	MAX.	MIN.	MAX.	
	19.6	60	1.0	31.1	1.0	45.5	1.0	60.1	1.0	70.7	1.0	81.5	
	23.8	66	1.0	28.2	1.0	41.4	1.0	54.6	1.0	64.3	1.0	74.1	
	28.3	72	1.0	25.9	1.0	37.9	1.0	50.0	1.0	58.9	1.0	67.9	
	33.2	78	1.0	23.9	1.0	35.0	1.0	46.2	1.0	54.4	1.0	62.7	
	38.5	84	1.0	22.2	1.0	32.5	1.0	42.9	1.0	50.5	1.0	58.2	
	44.2	90	1.1	20.7	1.0	30.3	1.0	40.0	1.0	47.1	1.0	54.3	
	50.3	96	1.1	19.4	1.0	28.4	1.0	37.5	1.0	44.2	1.0	50.9	
	56.7	102	1.1	18.3	1.1	26.7	1.1	35.3	1.1	41.6	1.1	47.9	
	63.6	108	1.2	17.2	1.1	25.3	1.1	33.3	1.1	39.3	1.1	45.3	
	70.9	114	1.3	16.3	1.2	23.9	1.2	31.6	1.2	37.2	1.2	42.9	
	78.5	120	1.3	15.5	1.3	22.7	1.3	30.0	1.3	35.3	1.3	40.7	
	86.6	126	1.4	14.8	1.3	21.6	1.3	28.6	1.3	33.7	1.3	38.8	
	95.0	132	1.4	14.1	1.4	20.7	1.4	27.3	1.4	32.1	1.4	37.0	
	103.9	138	1.5	13.5	1.4	19.8	1.4	26.1	1.4	30.7	1.4	35.4	
	113.1	144	1.6	12.9	1.5	18.9	1.5	25.0	1.5	29.4	1.5	33.9	
	122.7	150			1.6	18.2	1.6	24.0	1.6	28.3	1.6	32.6	
	132.7	156			1.6	17.5	1.6	23.1	1.6	27.2	1.6	31.3	
	143.1	162					1.7	22.2	1.7	26.2	1.7	30.2	
	153.9	168					1.8	21.4	1.8	25.2	1.8	29.1	
	165.1	174					1.8	20.7	1.8	24.4	1.8	28.1	
	176.7	180							1.9	23.5	1.9	27.1	
	188.7	186							1.9	22.8	1.9	26.3	
	201.1	192									2.0	25.4	
	213.8	198									2.1	24.7	
	227.0	204									2.1	23.9	
	240.5	210											
	254.5	216											
	268.8	222											
	283.5	228											

NOTE:

1. The tabulated cover depths shall be measured from the bottom of the asphalt or concrete pavement to the top of the pipe.

INDIANA DEPARTMENT OF TRANSPORTATION

PIPE HEIGHT OF COVER LIMITS

JANUARY 1998

STANDARD DRAWING NO. **E 717-PHCL-01**

ANTHONY L. UREMOVICH REGISTERED No. 18095 STATE OF INDIANA PROFESSIONAL ENGINEER

DESIGN STANDARDS ENGINEER

DETAILS PLACED IN THIS FORMAT 11-15-99

/s/ Anthony L. Uremovich 11-15-99
DESIGN STANDARDS ENGINEER DATE

/s/ Firooz Zandi 11-15-99
CHIEF HIGHWAY ENGINEER DATE

ORIGINALLY APPROVED 1-02-98

9" x 2½" STRUCTURAL PLATE ALUMINUM ALLOY PIPE (STEEL BOLTED)
HEIGHT OF COVER LIMITS (ft.)

	AREA (sft.)	DIAMETER (in.)	THICKNESS (in.)										
			0.225		0.250								
			MIN.	MAX.	MIN.	MAX.							
	19.6	60	1.0	92.4	1.0	100.0							
	23.8	66	1.0	84.0	1.0	94.0							
	28.3	72	1.0	77.0	1.0	86.2							
	33.2	78	1.0	71.1	1.0	79.5							
	38.5	84	1.0	66.0	1.0	73.8							
	44.2	90	1.0	61.6	1.0	68.9							
	50.3	96	1.0	57.7	1.0	64.6							
	56.7	102	1.1	54.3	1.1	60.8							
	63.6	108	1.1	51.3	1.1	57.4							
	70.9	114	1.2	48.6	1.2	54.4							
	78.5	120	1.3	46.2	1.3	51.7							
	86.6	126	1.3	44.0	1.3	49.2							
	95.0	132	1.4	42.0	1.4	47.0							
	103.9	138	1.4	40.1	1.4	44.9							
	113.1	144	1.5	38.5	1.5	43.1							
	122.7	150	1.6	36.9	1.6	41.3							
	132.7	156	1.6	35.5	1.6	39.7							
	143.1	162	1.7	34.2	1.7	38.3							
	153.9	168	1.8	33.0	1.8	36.9							
	165.1	174	1.8	31.8	1.8	35.6							
	176.7	180	1.9	30.8	1.9	34.4							
	188.7	186	1.9	29.8	1.9	33.3							
	201.1	192	2.0	28.8	2.0	32.3							
	213.8	198	2.1	28.0	2.1	31.3							
	227.0	204	2.1	27.1	2.1	30.4							
	240.5	210	2.2	26.4	2.2	29.5							
	254.5	216	2.3	25.6	2.3	28.7							
	268.8	222			2.3	27.9							
	283.5	228			2.4	27.2							

NOTE:

1. The tabulated cover depths shall be measured from the bottom of the asphalt or concrete pavement to the top of the pipe.

INDIANA DEPARTMENT OF TRANSPORTATION

PIPE HEIGHT OF COVER LIMITS

JANUARY 1998

STANDARD DRAWING NO. **E 717-PHCL-02**

ANTHONY L. UREMOVICH REGISTERED No. 18095 STATE OF INDIANA PROFESSIONAL ENGINEER

DESIGN STANDARDS ENGINEER

DETAILS PLACED IN THIS FORMAT 11-15-99

/s/ Anthony L. Uremovich 11-15-99
DESIGN STANDARDS ENGINEER DATE

/s/ Firooz Zandi 11-15-99
CHIEF HIGHWAY ENGINEER DATE

ORIGINALLY APPROVED 1-02-98

9" x 2½" STRUCTURAL PLATE ALUMINUM ALLOY PIPE-ARCH (STEEL BOLTED)
HEIGHT OF COVER LIMITS (ft.)

Rc (in.)	SPAN (ft.-in.)	RISE (ft.-in.)	AREA (sft.)	THICKNESS (in.)									
				0.100		0.125		0.150		0.175		0.200	
				MIN.	MAX.	MIN.	MAX.	MIN.	MAX.	MIN.	MAX.	MIN.	MAX.
31.75	6'-7	5'-8	29	1.0	23.6	1.0	26.7	1.0	26.7	1.0	26.7	1.0	26.7
31.75	6'-11	5'-9	31	1.0	22.4	1.0	25.4	1.0	25.4	1.0	25.4	1.0	25.4
31.75	7'-3	5'-11	34	1.1	21.4	1.0	24.2	1.0	24.2	1.0	24.2	1.0	24.2
31.75	7'-9	6'-0	36	1.1	20.0	1.0	22.7	1.0	22.7	1.0	22.7	1.0	22.7
31.75	8'-1	6'-1	39	1.1	19.2	1.1	21.7	1.1	21.7	1.1	21.7	1.1	21.7
31.75	8'-5	6'-3	41	1.1	18.4	1.1	20.9	1.1	20.9	1.1	20.9	1.1	20.9
31.75	8'-10	6'-4	44	1.2	17.6	1.1	19.9	1.1	19.9	1.1	19.9	1.1	19.9
31.75	9'-3	6'-5	47	1.2	16.8	1.2	19.0	1.2	19.0	1.2	19.0	1.2	19.0
31.75	9'-7	6'-6	49	1.3	16.2	1.2	18.3	1.2	18.3	1.2	18.3	1.2	18.3
31.75	9'-11	6'-8	52	1.3	15.6	1.2	17.7	1.2	17.7	1.2	17.7	1.2	17.7
31.75	10'-3	6'-9	55	1.3	15.1	1.3	17.1	1.3	17.1	1.3	17.1	1.3	17.1
31.75	10'-9	6'-10	58	1.4	14.4	1.3	16.3	1.3	16.3	1.3	16.3	1.3	16.3
31.75	11'-1	7'-0	61	1.5	14.0	1.4	15.8	1.4	15.8	1.4	15.8	1.4	15.8
31.75	11'-5	7'-1	64	1.5	13.6	1.4	15.4	1.4	15.4	1.4	15.4	1.4	15.4
31.75	11'-9	7'-2	67	1.5	13.2	1.5	14.9	1.5	14.9	1.5	14.9	1.5	14.9
31.75	12'-3	7'-3	70	1.6	12.6	1.5	14.3	1.5	14.3	1.5	14.3	1.5	14.3
31.75	12'-7	7'-5	73	1.7	11.7	1.6	13.9	1.6	13.9	1.6	13.9	1.6	13.9
31.75	12'-11	7'-6	77	1.7	11.3	1.6	13.6	1.6	13.6	1.6	13.6	1.6	13.6
31.75	13'-1	8'-2	83	1.7	11.2	1.6	13.4	1.6	13.4	1.6	13.4	1.6	13.4
31.75	13'-1	8'-4	86	1.7	11.2	1.6	13.4	1.6	13.4	1.6	13.4	1.6	13.4
31.75	13'-11	8'-5	90	1.9	10.4	1.7	12.0	1.7	12.0	1.7	12.0	1.7	12.0
31.75	14'-0	8'-7	94	1.9	10.3	1.8	11.9	1.8	11.9	1.8	11.9	1.8	11.9
31.75	13'-11	9'-5	101	1.9	10.4	1.7	12.0	1.7	12.0	1.7	12.0	1.7	12.0
31.75	14'-3	9'-7	105	1.9	10.1	1.8	11.7	1.8	11.7	1.8	11.7	1.8	11.7
31.75	14'-8	9'-8	109			1.8	11.3	1.8	11.3	1.8	11.3	1.8	11.3
31.75	14'-11	9'-10	114			1.9	11.1	1.9	11.1	1.9	11.1	1.9	11.1

NOTE:

1. The tabulated cover depths shall be measured from the bottom of the asphalt or concrete pavement to the top of the pipe.

2. A specific design shall be performed for structures with corner radii other than those tabulated above to determine the appropriate cover depth limits.

INDIANA DEPARTMENT OF TRANSPORTATION

PIPE HEIGHT OF COVER LIMITS

JANUARY 1998

STANDARD DRAWING NO. **E 717-PHCL-03**

ANTHONY L. UREMOVICH REGISTERED No. 18095 STATE OF INDIANA PROFESSIONAL ENGINEER

DESIGN STANDARDS ENGINEER

DETAILS PLACED IN THIS FORMAT 11-15-99

/s/ Anthony L. Uremovich 11-15-99
DESIGN STANDARDS ENGINEER DATE

/s/ Firooz Zandi 11-15-99
CHIEF HIGHWAY ENGINEER DATE

ORIGINALLY APPROVED 1-02-98

9" x 2½" STRUCTURAL PLATE ALUMINUM ALLOY PIPE-ARCH (STEEL BOLTED)
HEIGHT OF COVER LIMITS (ft.)

Rc (in.)	RISE (ft.-in.)	RISE (ft.-in.)	AREA (sft.)	THICKNESS (in.)									
				0.225		0.250							
				MIN.	MAX.	MIN.	MAX.						
31.75	6'-7	5'-8	29	1.0	26.7	1.0	26.7						
31.75	6'-11	5'-9	31	1.0	25.4	1.0	25.4						
31.75	7'-3	5'-11	34	1.0	24.2	1.0	24.2						
31.75	7'-9	6'-0	36	1.0	22.7	1.0	22.7						
31.75	8'-1	6'-1	39	1.1	21.7	1.1	21.7						
31.75	8'-5	6'-3	41	1.1	20.9	1.1	20.9						
31.75	8'-10	6'-4	44	1.1	19.9	1.1	19.9						
31.75	9'-3	6'-5	47	1.2	19.0	1.2	19.0						
31.75	9'-7	6'-6	49	1.2	18.3	1.2	18.3						
31.75	9'-11	6'-8	52	1.2	17.7	1.2	17.7						
31.75	10'-3	6'-9	55	1.3	17.1	1.3	17.1						
31.75	10'-9	6'-10	58	1.3	16.3	1.3	16.3						
31.75	11'-1	7'-0	61	1.4	15.8	1.4	15.8						
31.75	11'-5	7'-1	64	1.4	15.4	1.4	15.4						
31.75	11'-9	7'-2	67	1.5	14.9	1.5	14.9						
31.75	12'-3	7'-3	70	1.5	14.3	1.5	14.3						
31.75	12'-7	7'-5	73	1.6	13.9	1.6	13.9						
31.75	12'-11	7'-6	77	1.6	13.6	1.6	13.6						
31.75	13'-1	8'-2	83	1.6	13.4	1.6	13.4						
31.75	13'-1	8'-4	86	1.6	13.4	1.6	13.4						
31.75	13'-11	8'-5	90	1.7	12.0	1.7	12.0						
31.75	14'-0	8'-7	94	1.8	11.9	1.8	11.9						
31.75	13'-11	9'-5	101	1.7	12.0	1.7	12.0						
31.75	14'-3	9'-7	105	1.8	11.7	1.8	11.7						
31.75	14'-8	9'-8	109	1.8	11.3	1.8	11.3						
31.75	14'-11	9'-10	114	1.9	11.1	1.9	11.1						

NOTE:

1. The tabulated cover depths shall be measured from the bottom of the asphalt or concrete pavement to the top of the pipe.

2. A specific design shall be performed for structures with corner radii other than those tabulated above to determine the appropriate cover depth limits.

INDIANA DEPARTMENT OF TRANSPORTATION

PIPE HEIGHT OF COVER LIMITS

JANUARY 1998

STANDARD DRAWING NO. **E 717-PHCL-04**

ANTHONY L. UREMOVICH REGISTERED No. 18095 STATE OF INDIANA PROFESSIONAL ENGINEER

DESIGN STANDARDS ENGINEER

DETAILS PLACED IN THIS FORMAT 11-15-99

/s/ Anthony L. Uremovich 11-15-99
DESIGN STANDARDS ENGINEER DATE

/s/ Firooz Zandi 11-15-99
CHIEF HIGHWAY ENGINEER DATE

ORIGINALLY APPROVED 1-02-98

9" x 2½" STRUCTURAL PLATE ALUMINUM ALLOY PIPE-ARCH (STEEL BOLTED)
HEIGHT OF COVER LIMITS (ft.)

Rc (in.)	SPAN (ft.-in.)	RISE (ft.-in.)	AREA (sft)	THICKNESS (in.)									
				0.100		0.125		0.150		0.175		0.200	
				MIN.	MAX.	MIN.	MAX.	MIN.	MAX.	MIN.	MAX.	MIN.	MAX.
31.75	15-4	10-0	118			1.9	10.7	1.9	10.7	1.9	10.7	1.9	10.7
31.75	15-7	10-2	123			2.0	10.5	2.0	10.5	2.0	10.5	2.0	10.5
31.75	16-1	10-4	127			2.0	10.1	2.0	10.1	2.0	10.1	2.0	10.1
31.75	16-4	10-6	132					2.0	9.9	2.0	9.9	2.0	9.9
31.75	16-9	10-8	136					2.1	9.6	2.1	9.6	2.1	9.6
31.75	17-0	10-10	141					2.1	9.5	2.1	9.5	2.1	9.5
31.75	17-3	11-0	146					2.2	9.3	2.2	9.3	2.2	9.3
31.75	17-9	11-2	151							2.2	8.9	2.2	8.9
31.75	18-0	11-4	156							2.3	8.8	2.3	8.8
31.75	18-5	11-6	161							2.3	8.5	2.3	8.5
31.75	18-8	11-8	167							2.3	8.4	2.3	8.4
31.75	19-2	11-9	172									2.4	8.0
31.75	19-5	11-11	177									2.4	7.9
31.75	19-10	12-1	182									2.5	7.7
31.75	20-1	12-3	188									2.5	7.5
31.75	20-1	12-6	194										
31.75	20-10	12-7	199										
31.75	21-1	12-9	205										
31.75	21-6	12-11	211										
47.00	20-1	13-11	216										
47.00	20-7	14-3	224										
47.00	21-5	14-7	241										
47.00	21-11	14-11	254										
47.00	22-8	15-3	267										

NOTE:

1. The tabulated cover depths shall be measured from the bottom of the asphalt or concrete pavement to the top of the pipe.

2. A specific design shall be performed for structures with corner radii other than those tabulated above to determine the appropriate cover depth limits.

INDIANA DEPARTMENT OF TRANSPORTATION

PIPE HEIGHT OF COVER LIMITS

JANUARY 1998

STANDARD DRAWING NO. **E 717-PHCL-05**

ANTHONY L. UREMOVICH REGISTERED No. 18095 STATE OF INDIANA PROFESSIONAL ENGINEER

DESIGN STANDARDS ENGINEER

DETAILS PLACED IN THIS FORMAT 11-15-99

/s/ Anthony L. Uremovich 11-15-99
DESIGN STANDARDS ENGINEER DATE

/s/ Firooz Zandi 11-15-99
CHIEF HIGHWAY ENGINEER DATE

ORIGINALLY APPROVED 1-02-98

9" x 2½" STRUCTURAL PLATE ALUMINUM ALLOY PIPE-ARCH (STEEL BOLTED)
HEIGHT OF COVER LIMITS (ft.)

Rc (in.)	SPAN (ft.-in.)	RISE (ft.-in.)	AREA (sft)	THICKNESS (in.)									
				0.225		0.250							
				MIN.	MAX.	MIN.	MAX.						
31.75	15-4	10-0	118	1.9	10.7	1.9	10.7						
31.75	15-7	10-2	123	2.0	10.5	2.0	10.5						
31.75	16-1	10-4	127	2.0	10.1	2.0	10.1						
31.75	16-4	10-6	132	2.0	9.9	2.0	9.9						
31.75	16-9	10-8	136	2.1	9.6	2.1	9.6						
31.75	17-0	10-10	141	2.1	9.5	2.1	9.5						
31.75	17-3	11-0	146	2.2	9.3	2.2	9.3						
31.75	17-9	11-2	151	2.2	8.9	2.2	8.9						
31.75	18-0	11-4	156	2.3	8.8	2.3	8.8						
31.75	18-5	11-6	161	2.3	8.5	2.3	8.5						
31.75	18-8	11-8	167	2.3	8.4	2.3	8.4						
31.75	19-2	11-9	172	2.4	8.0	2.4	8.0						
31.75	19-5	11-11	177	2.4	7.9	2.4	7.9						
31.75	19-10	12-1	182	2.5	7.7	2.5	7.7						
31.75	20-1	12-3	188	2.5	7.5	2.5	7.5						
31.75	20-1	12-6	194	2.5	7.5	2.5	7.5						
31.75	20-10	12-7	199	2.6	7.1	2.6	7.1						
31.75	21-1	12-9	205	2.6	7.0	2.6	7.0						
31.75	21-6	12-11	211	2.7	6.7	2.7	6.7						
47.00	20-1	13-11	216			2.5	12.4						
47.00	20-7	14-3	224			2.6	12.1						
47.00	21-5	14-7	241			2.7	11.5						
47.00	21-11	14-11	254			2.7	11.2						
47.00	22-8	15-3	267			2.8	10.8						

NOTE:

1. The tabulated cover depths shall be measured from the bottom of the asphalt or concrete pavement to the top of the pipe.

2. A specific design shall be performed for structures with corner radii other than those tabulated above to determine the appropriate cover depth limits.

INDIANA DEPARTMENT OF TRANSPORTATION

PIPE HEIGHT OF COVER LIMITS

JANUARY 1998

STANDARD DRAWING NO. **E 717-PHCL-06**

ANTHONY L. UREMOVICH REGISTERED No. 18095 STATE OF INDIANA PROFESSIONAL ENGINEER

DESIGN STANDARDS ENGINEER

DETAILS PLACED IN THIS FORMAT 11-15-99

/s/ Anthony L. Uremovich 11-15-99
DESIGN STANDARDS ENGINEER DATE

/s/ Firooz Zandi 11-15-99
CHIEF HIGHWAY ENGINEER DATE

ORIGINALLY APPROVED 1-02-98

6" x 2" STRUCTURAL PLATE STEEL PIPE (BOLTED)
HEIGHT OF COVER LIMITS (ft)

	AREA (sft)	DIAMETER (in.)	THICKNESS (in.)										
			0.111		0.140		0.170						
			MIN.	MAX.	MIN.	MAX.	MIN.	MAX.					
	19.6	60	1.0	47.7	1.0	68.8	1.0	90.0					
	23.8	66	1.0	43.4	1.0	62.6	1.0	81.8					
	28.3	72	1.0	39.8	1.0	57.4	1.0	75.0					
	33.2	78	1.0	36.7	1.0	52.9	1.0	69.2					
	38.5	84	1.0	34.1	1.0	49.2	1.0	64.2					
	44.2	90	1.0	31.8	1.0	45.9	1.0	60.0					
	50.3	96	1.0	29.8	1.0	43.0	1.0	56.2					
	56.7	102	1.1	28.1	1.1	40.5	1.1	52.9					
	63.6	108	1.1	26.5	1.1	38.2	1.1	50.0					
	70.9	114	1.2	25.1	1.2	36.2	1.2	47.3					
	78.5	120	1.3	23.8	1.3	34.4	1.3	45.0					
	86.6	126	1.3	22.7	1.3	32.8	1.3	42.8					
	95.0	132	1.4	21.7	1.4	31.3	1.4	40.9					
	103.9	138	1.4	20.7	1.4	29.9	1.4	39.1					
	113.1	144	1.5	19.9	1.5	28.7	1.5	37.5					
	122.7	150	1.6	19.1	1.6	27.5	1.6	36.0					
	132.7	156	1.6	18.3	1.6	26.4	1.6	34.6					
	143.1	162	1.7	17.6	1.7	25.5	1.7	33.3					
	153.9	168	1.8	17.0	1.8	24.6	1.8	32.1					
	165.1	174	1.8	16.4	1.8	23.7	1.8	31.0					
	176.7	180	1.9	15.9	1.9	22.9	1.9	30.0					
	188.7	186	1.9	15.4	1.9	22.2	1.9	29.0					
	201.1	192			2.0	21.5	2.0	28.1					
	213.8	198			2.1	20.8	2.1	27.2					
	227.0	204			2.1	20.2	2.1	26.4					
	240.5	210			2.2	19.6	2.2	25.7					
	254.5	216					2.3	25.0					
	268.8	222					2.3	24.3					
	283.5	228					2.4	23.0					
	298.6	234					2.4	7.0					
	314.2	240											
	330.1	246											
	346.4	252											

NOTE:

1. The tabulated cover depths shall be measured from the bottom of the asphalt or concrete pavement to the top of the pipe.

2. The tabulated plate thickness reflects the required thickness for top and side plates. Refer to 908.09 (a) for the required bottom plate thickness.

INDIANA DEPARTMENT OF TRANSPORTATION

PIPE HEIGHT OF COVER LIMITS

JANUARY 1998

STANDARD DRAWING NO. **E 717-PHCL-07**

ANTHONY L. UREMOVICH REGISTERED No. 18095 STATE OF INDIANA PROFESSIONAL ENGINEER

DESIGN STANDARDS ENGINEER

DETAILS PLACED IN THIS FORMAT 11-15-99

/s/ Anthony L. Uremovich 11-15-99
DESIGN STANDARDS ENGINEER DATE

/s/ Firooz Zandi 11-15-99
CHIEF HIGHWAY ENGINEER DATE

ORIGINALLY APPROVED 1-02-98

6" x 2" STRUCTURAL PLATE STEEL PIPE (BOLTED)
HEIGHT OF COVER LIMITS (in.)

AREA (sft)	DIAMETER (in.)	THICKNESS (in.)							
		0.188		0.218		0.249		0.280	
		MIN.	MAX.	MIN.	MAX.	MIN.	MAX.	MIN.	MAX.
19.6	60	1.0	100.0	1.0	100.0	1.0	100.0	1.0	100.0
23.8	66	1.0	93.9	1.0	100.0	1.0	100.0	1.0	100.0
28.3	72	1.0	86.1	1.0	100.0	1.0	100.0	1.0	100.0
33.2	78	1.0	79.4	1.0	95.7	1.0	100.0	1.0	100.0
38.5	84	1.0	73.8	1.0	88.8	1.0	100.0	1.0	100.0
44.2	90	1.0	68.8	1.0	82.9	1.0	97.7	1.0	100.0
50.3	96	1.0	64.5	1.0	77.7	1.0	91.6	1.0	100.0
56.7	102	1.1	60.7	1.1	73.2	1.1	86.2	1.1	94.1
63.6	108	1.1	57.4	1.1	69.1	1.1	84.1	1.1	88.8
70.9	114	1.2	54.3	1.2	65.4	1.2	77.1	1.2	84.2
78.5	120	1.3	51.6	1.3	62.2	1.3	73.3	1.3	80.0
86.6	126	1.3	49.2	1.3	59.2	1.3	69.8	1.3	76.1
95.0	132	1.4	46.9	1.4	56.5	1.4	66.6	1.4	72.7
103.9	138	1.4	44.9	1.4	54.1	1.4	63.7	1.4	69.5
113.1	144	1.5	43.0	1.5	51.8	1.5	61.1	1.5	66.6
122.7	150	1.6	41.3	1.6	49.7	1.6	58.6	1.6	64.0
132.7	156	1.6	39.7	1.6	47.8	1.6	56.4	1.6	61.5
143.1	162	1.7	38.2	1.7	46.0	1.7	54.3	1.7	59.2
153.9	168	1.8	36.9	1.8	44.4	1.8	52.3	1.8	57.1
165.1	174	1.8	35.6	1.8	42.9	1.8	50.5	1.8	55.1
176.7	180	1.9	34.4	1.9	41.4	1.9	48.8	1.9	53.3
188.7	186	1.9	33.3	1.9	40.1	1.9	47.3	1.9	51.6
210.1	192	2.0	32.2	2.0	38.8	2.0	45.8	2.0	50.0
213.8	198	2.1	31.3	2.1	37.7	2.1	44.4	2.1	48.4
227.0	204	2.1	30.3	2.1	36.6	2.1	43.1	2.1	47.0
240.5	210	2.1	29.5	2.1	35.5	2.1	41.9	2.1	45.7
254.5	216	2.3	28.7	2.3	34.5	2.3	40.7	2.3	44.4
268.8	222	2.3	27.9	2.3	33.6	2.3	39.6	2.3	43.2
283.5	228	2.4	27.1	2.4	32.7	2.4	38.5	2.4	42.1
298.6	234	2.4	26.4	2.4	31.9	2.4	37.6	2.4	41.0
314.2	240	2.5	25.8	2.5	31.1	2.5	36.6	2.5	40.0
330.1	246	2.5	25.2	2.6	30.3	2.6	35.7	2.6	39.0
346.4	252			2.6	28.8	2.6	34.0	2.6	38.0

NOTE:

1. The tabulated cover depths shall be measured from the bottom of the asphalt or concrete pevement to the top of the pipe.

2. The tabulated thickness reflects the required thickness for top and side plates. Refer to 908.08 (a) for the required bottom plate thickness.

INDIANA DEPARTMENT OF TRANSPORTATION

PIPE HEIGHT OF COVER LIMITS

JANUARY 1998

STANDARD DRAWING NO. **E 717-PHCL-08**

ANTHONY L. UREMOVICH REGISTERED No. 18095 STATE OF INDIANA PROFESSIONAL ENGINEER

DESIGN STANDARDS ENGINEER

DETAILS PLACED IN THIS FORMAT 11-15-99

/s/ Anthony L. Uremovich 11-15-99
DESIGN STANDARDS ENGINEER DATE

/s/ Firooz Zandi 11-15-99
CHIEF HIGHWAY ENGINEER DATE

ORIGINALLY APPROVED 1-02-98

6" x 2" STRUCTURAL PLATE STEEL PIPE-ARCH (BOLTED)
HEIGHT OF COVER LIMITS (ft.)

Rc (in.)	SPAN (ft.-in.)	RISE (ft.-in.)	AREA (sft)	THICKNESS (in.)									
				0.111		0.140 thru 0.280							
				MIN.	MAX.	MIN.	MAX.						
18	6-1	4-7	22	1.3	16.4	1.3	16.4						
18	6'-4	4-9	24	1.3	15.7	1.3	15.7						
18	6-9	4-11	26	1.4	14.8	1.4	14.8						
18	7-0	5-1	28	1.4	14.2	1.4	14.2						
18	7-3	5-3	31	1.5	13.7	1.5	13.7						
18	7-8	5-5	33	1.6	13.0	1.6	13.0						
18	7-11	5-7	35	1.6	12.6	1.6	12.6						
18	8-2	5-9	38	1.7	12.2	1.7	12.2						
18	8-7	5-11	40	1.8	11.6	1.8	11.6						
18	8-10	6-1	43	1.8	11.3	1.8	11.3						
18	9-4	6-3	46	2.0	10.7	2.0	10.7						
18	9-6	6-5	49	2.0	10.5	2.0	10.5						
18	9-9	6-7	52	2.1	10.2	2.1	10.2						
18	10-3	6-9	55	2.1	8.7	2.1	8.7						
18	10-8	6-11	58	2.1	8.3	2.1	8.3						
18	10-11	7-1	61	2.2	8.0	2.2	8.0						
18	11-5	7-3	64	2.3	7.5	2.3	7.5						
18	11-7	7-5	67	2.4	7.3	2.4	7.3						
18	11-10	7-7	71	2.5	7.1	2.5	7.1						
18	12-4	7-9	74	2.6	6.6	2.6	6.6						
18	12-6	7-11	78	2.7	6.5	2.7	6.5						
18	12-8	8-1	81	2.8	6.3	2.8	6.3						
18	12-10	8-4	85	2.8	6.2	2.8	6.2						
31	13-3	9-4	97	1.7	12.4	1.7	12.4						
31	13-6	9-6	102	1.7	12.1	1.7	12.1						
31	14-0	9-8	105	1.8	11.6	1.8	11.6						
31	14-2	9-10	109	1.8	11.5	1.8	11.5						
31	14-5	10-0	114	1.8	11.2	1.8	11.2						
31	14-11	10-2	118	1.9	10.8	1.9	10.8						

NOTE:

1. The tabulated cover depths shall be measured from the bottom of the asphalt or concrete pavement to the top of the pipe.

2. A specific design shall be performed for structures with corner radii other than those tabulated above to determine the appropriate cover depth limits.

3. The tabulated plate thickness reflects the required thickness for top and side plates. Refer to 908.09 (a) for the required bottom plate thickness.

INDIANA DEPARTMENT OF TRANSPORTATION

PIPE HEIGHT OF COVER LIMITS

JANUARY 1998

STANDARD DRAWING NO. **E 717-PHCL-09**

ANTHONY L. UREMOVICH REGISTERED No. 18095 STATE OF INDIANA PROFESSIONAL ENGINEER

DESIGN STANDARDS ENGINEER

DETAILS PLACED IN THIS FORMAT 11-15-99

/s/ Anthony L. Uremovich 11-15-99
DESIGN STANDARDS ENGINEER DATE

/s/ Firooz Zandi 11-15-99
CHIEF HIGHWAY ENGINEER DATE

ORIGINALLY APPROVED 1-02-98

6" x 2" STRUCTURAL PLATE STEEL PIPE-ARCH (BOLTED)
HEIGHT OF COVER LIMITS (ft.)

Rc (in.)	SPAN (ft.-in.)	RISE (ft.-in.)	AREA (sft)	THICKNESS (in.)									
				0.111		0.140 thru 0.280							
				MIN.	MAX.	MIN.	MAX.						
31	15-4	10-4	123	1.9	10.5	1.9	10.5						
31	15-7	10-6	127	2.0	10.3	2.0	10.3						
31	15-10	10-8	132	2.0	10.1	2.0	10.1						
31	16-3	10-10	137	2.0	9.7	2.0	9.7						
31	16-6	11-11	142	2.1	9.5	2.1	9.5						
31	17-0	11-2	146	2.1	9.2	2.1	9.2						
31	17-2	11-4	151	2.2	9.1	2.2	9.1						
31	17-5	11-6	157	2.2	8.9	2.2	8.9						
31	17-6	11-8	161	2.2	8.6	2.2	8.6						
31	18-1	11-10	167	2.3	8.5	2.3	8.5						
31	18-7	12-0	172	2.3	8.2	2.3	8.2						
31	18-9	12-2	177	2.3	8.0	2.3	8.0						
31	19-3	12-4	182			2.4	7.7						
31	19-6	12-6	188			2.4	7.6						
31	19-8	12-8	194			2.5	7.5						
31	19-11	12-10	200			2.5	7.4						
31	20-5	13-0	205			2.6	7.1						
31	20-7	13-2	211			2.6	7.0						

NOTE:

1. The tabulated cover depths shall be measured from the bottom of the asphalt or concrete pavement to the top of the pipe.

2. A specific design shall be performed for structures with corner radii other than those tabulated above to determine the appropriate cover depth limits.

3. The tabulated plate thickness reflects the required thickness for top and side plates. Refer to 908.09 (a) for the required bottom plate thickness.

INDIANA DEPARTMENT OF TRANSPORTATION

PIPE HEIGHT OF COVER LIMITS

JANUARY 1998

STANDARD DRAWING NO. **E 717-PHCL-10**

ANTHONY L. UREMOVICH REGISTERED No. 18095 STATE OF INDIANA PROFESSIONAL ENGINEER

DESIGN STANDARDS ENGINEER

DETAILS PLACED IN THIS FORMAT 11-15-99

/s/ Anthony L. Uremovich 11-15-99
DESIGN STANDARDS ENGINEER DATE

/s/ Firooz Zandi 11-15-99
CHIEF HIGHWAY ENGINEER DATE

ORIGINALLY APPROVED 1-02-98

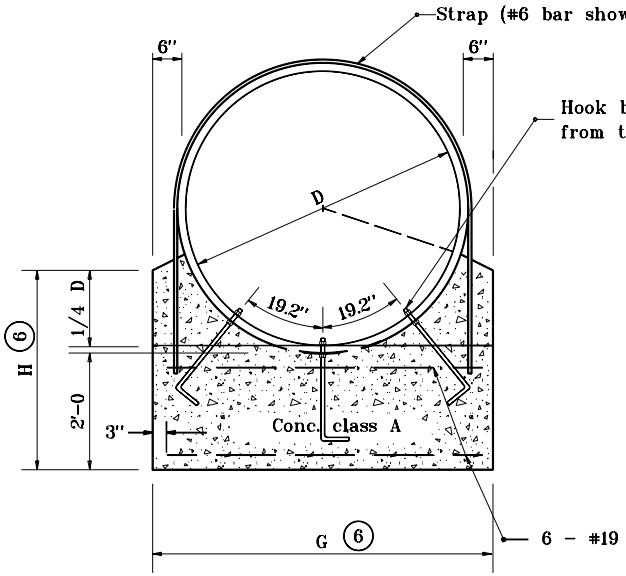

ANCHOR FOR STRUCTURAL PLATE PIPE
FRONT ELEVATION

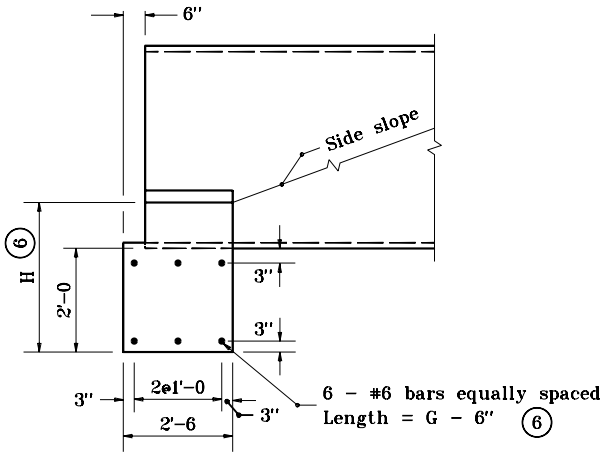

SIDE ELEVATION

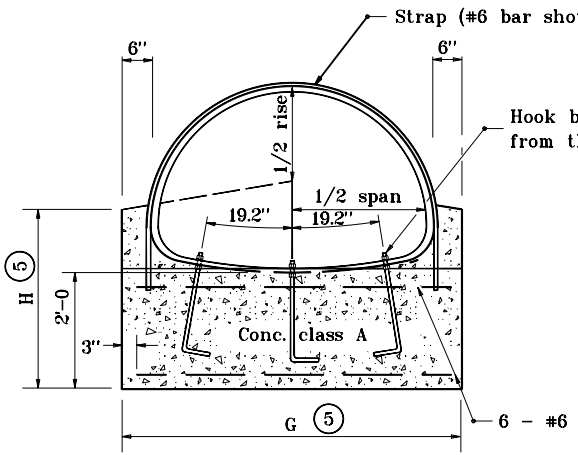

ANCHOR FOR STRUCTURAL
PLATE PIPE-ARCH
FRONT ELEVATION

GENERAL NOTES

1. Anchor straps shall be used at both upsteam and downstream ends of all structural plate pipes and pipe-arches.
2. See Standard Drawing E 715-PASD-01 for anchor strap details.
3. Hook bolts, and anchor straps shall be used at all structural plate pipes and pipe arches with a diameter or span of 84" or greater.
4. See Standard Drawing E 715-PAHB-01 for hook bolt details.

(5) For dimension, enter chart on Standard Drawing E 717-ANCH-01 or E 717-ANCH-03 with known span and rise.

(6) For dimension, enter chart on Standard Drawing E 717-ANCH-02 with known dimension D.

INDIANA DEPARTMENT OF TRANSPORTATION

SINGLE STRUCTURAL PLATE PIPE CONCRETE ANCHOR

JANUARY 1998

STANDARD DRAWING NO. **E 717-SPCA-01**

ANTHONY L. UREMOVICH REGISTERED No. 18095 STATE OF INDIANA PROFESSIONAL ENGINEER

DESIGN STANDARDS ENGINEER

DETAILS PLACED IN THIS FORMAT 7-27-99

/s/ Anthony L. Uremovich 7-27-99
DESIGN STANDARDS ENGINEER — DATE

/s/ Firooz Zandi 7-27-99
CHIEF HIGHWAY ENGINEER — DATE

ORIGINALLY APPROVED 1-02-98

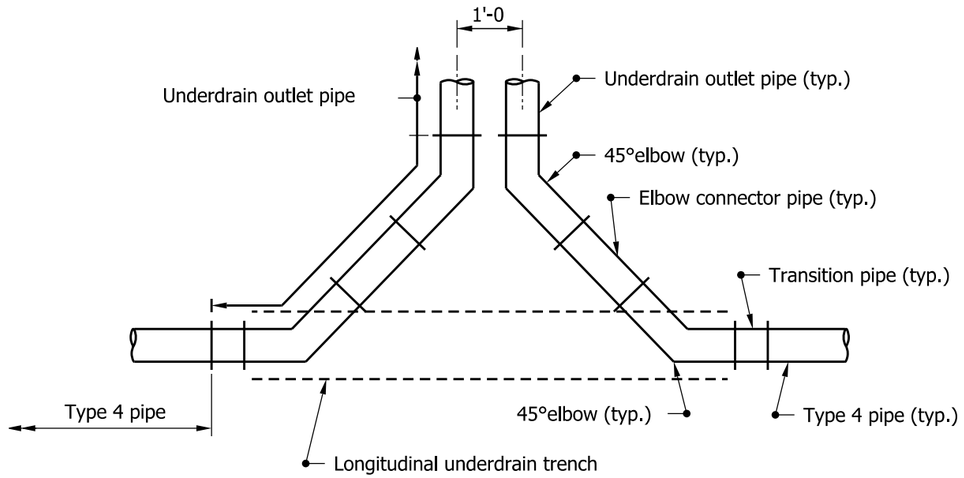

TWIN OUTLET DETAIL-PLAN VIEW

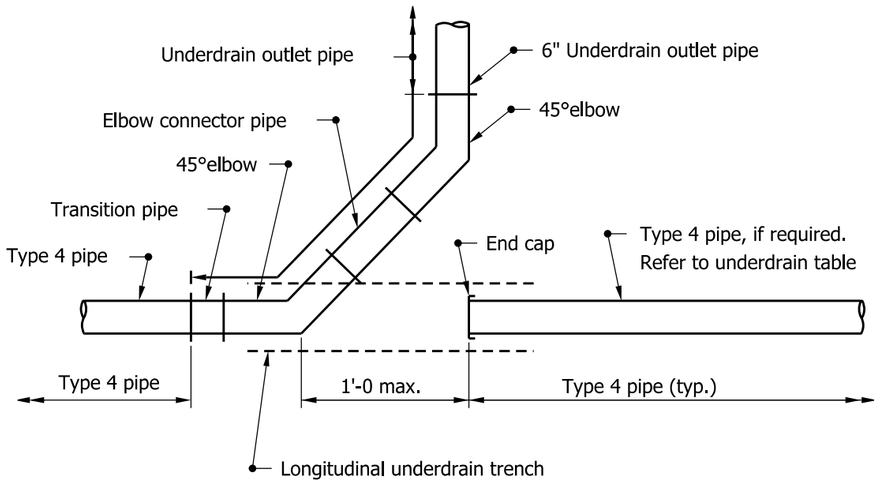

SINGLE OUTLET DETAIL-PLAN VIEW

NOTE:

1. See Standard Drawing E 718-UNDR-07 for General Notes.

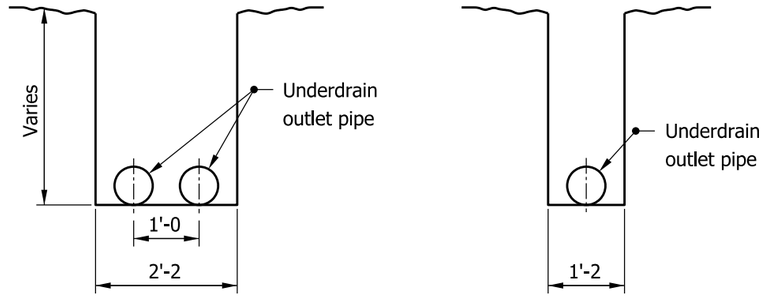

OUTLET TRENCH DETAILS

INDIANA DEPARTMENT OF TRANSPORTATION

UNDERDRAIN DETAILS

SEPTEMBER 2009

STANDARD DRAWING NO. E 718-UNDR-01

RICHARD L. VanCLEAVE REGISTERED No. 9750 STATE OF INDIANA PROFESSIONAL ENGINEER

DESIGN STANDARDS ENGINEER

/s/ Richard L.VanCleave 09/01/09
DESIGN STANDARDS ENGINEER DATE

/s/ Mark A. Miller 09/01/09
CHIEF HIGHWAY ENGINEER DATE

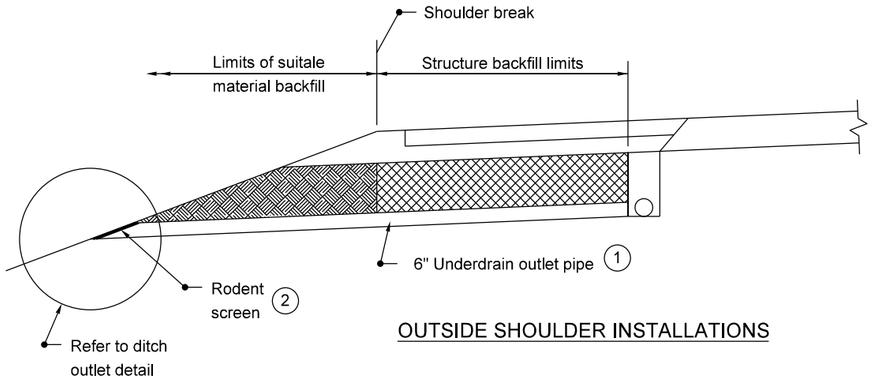

OUTSIDE SHOULDER INSTALLATIONS

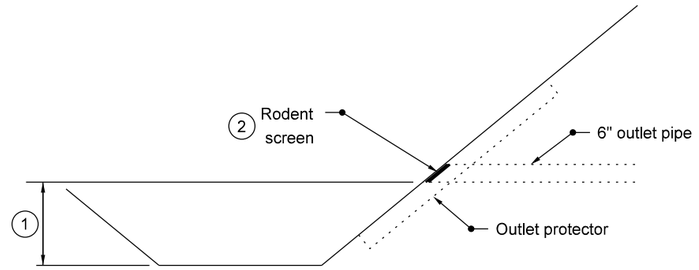

DITCH OUTLET DETAIL

NOTE:

1. See Standard Drawing E 718-UNDR-07 for General Notes.

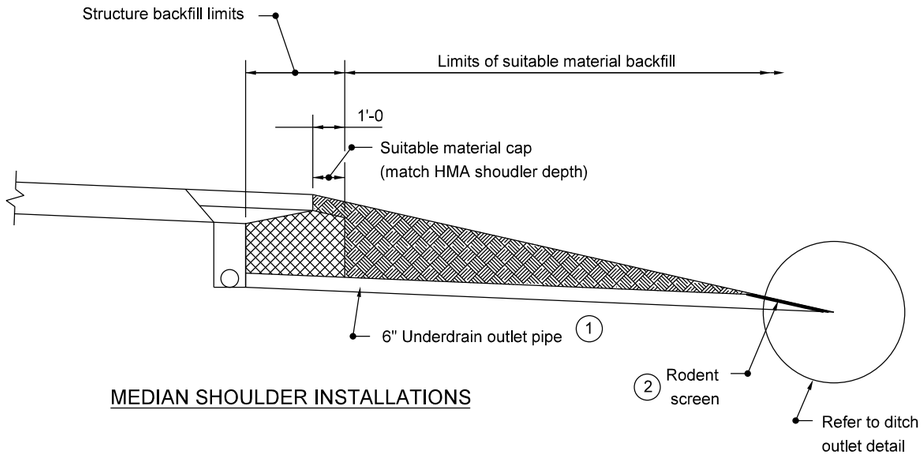

MEDIAN SHOULDER INSTALLATIONS

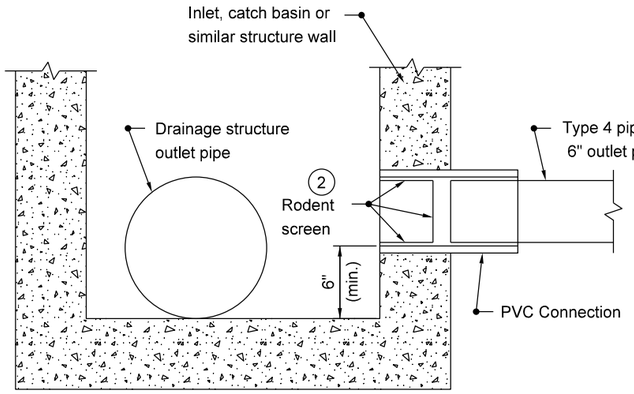

DRAINAGE STRUCTURE OUTLET DETAIL

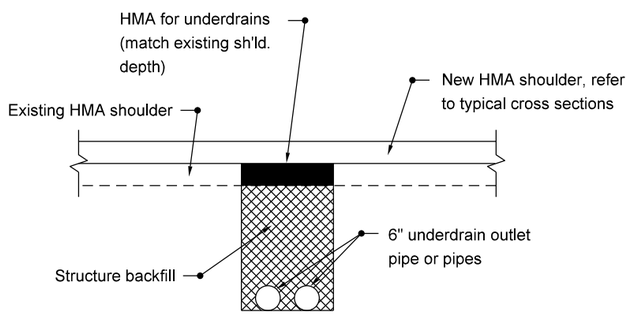

RETROFIT UNDERDRAIN OUTLET DETAIL (UNDER PAVED SHOULDER)

INDIANA DEPARTMENT OF TRANSPORTATION

UNDERDRAIN DETAILS

SEPTEMBER 2009

STANDARD DRAWING NO. E 718-UNDR-02

RICHARD L. VanCLEAVE REGISTERED No. 9750 STATE OF INDIANA PROFESSIONAL ENGINEER

DESIGN STANDARDS ENGINEER

/s/ Richard L.VanCleave 09/01/09
DESIGN STANDARDS ENGINEER DATE

/s/ Mark A. Miller 09/01/09
CHIEF HIGHWAY ENGINEER DATE

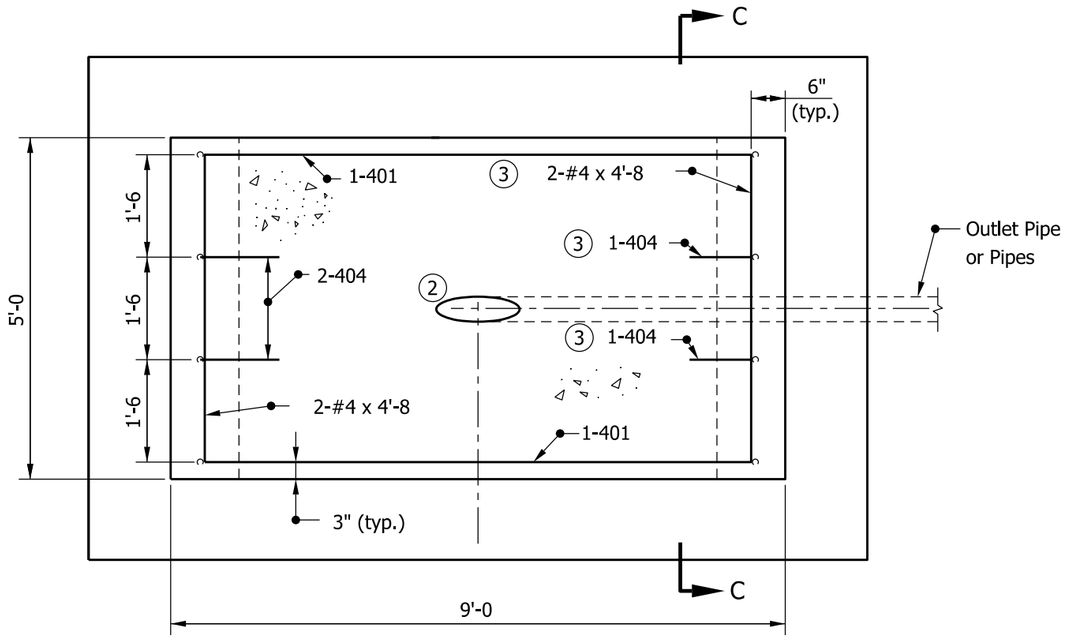

PLAN VIEW

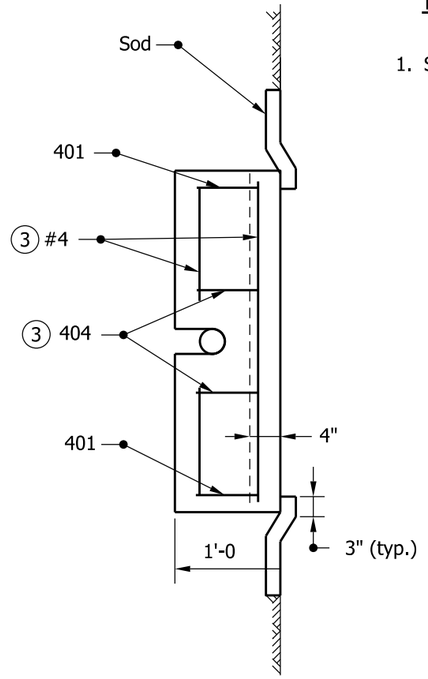

SECTION C-C

NOTE:

1. See Standard Drawing E 718-UNDR-07 for General Notes.

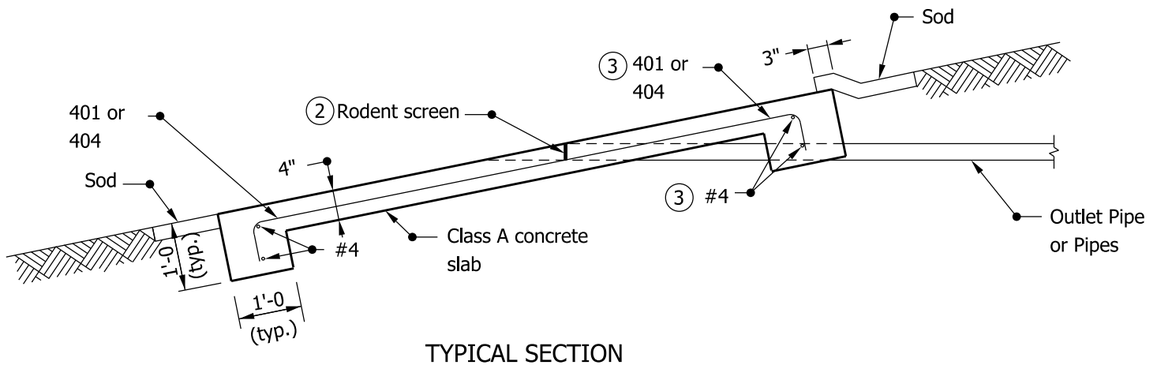

TYPICAL SECTION

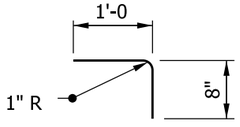

404 x 1'-8

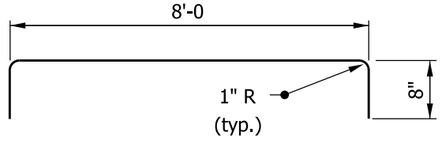

401 x 9'-4

INDIANA DEPARTMENT OF TRANSPORTATION

OUTLET PROTECTOR, TYPE 1

SEPTEMBER 2009

STANDARD DRAWING NO. E 718-UNDR-03

RICHARD L. VanCLEAVE
REGISTERED
No. 9750
STATE OF INDIANA
PROFESSIONAL ENGINEER

DESIGN STANDARDS ENGINEER

/s/ Richard L.VanCleave 09/01/09
DESIGN STANDARDS ENGINEER DATE

/s/ Mark A. Miller 09/01/09
CHIEF HIGHWAY ENGINEER DATE

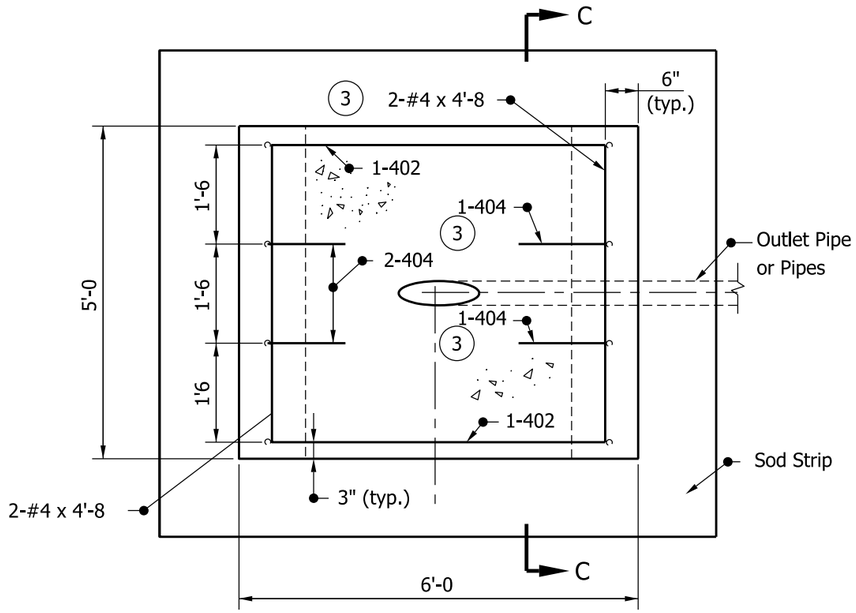

PLAN VIEW

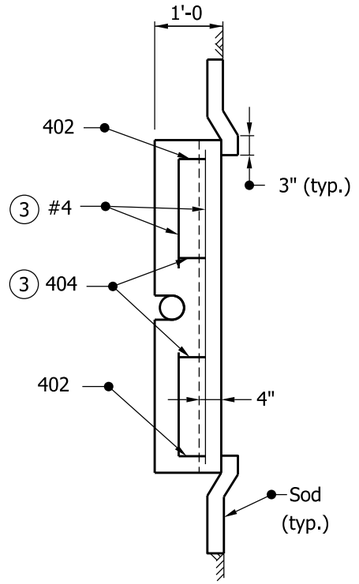

SECTION C-C

NOTE:

1. See Standard Drawing E 718-UNDR-07 for General Notes.

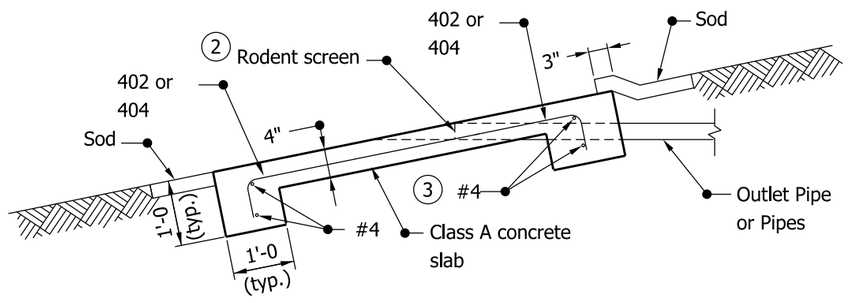

TYPICAL SECTION

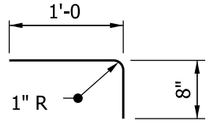

404 x 1'-8

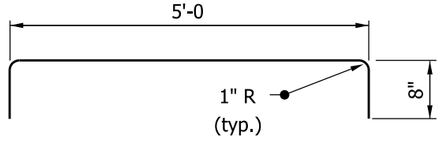

402 x 6'-4

INDIANA DEPARTMENT OF TRANSPORTATION

OUTLET PROTECTOR, TYPE 2

SEPTEMBER 2009

STANDARD DRAWING NO. E 718-UNDR-04

RICHARD L. VanCLEAVE
REGISTERED
No. 9750
STATE OF INDIANA
PROFESSIONAL ENGINEER

DESIGN STANDARDS ENGINEER

/s/ Richard L.VanCleave 09/01/09
DESIGN STANDARDS ENGINEER DATE

/s/ Mark A. Miller 09/01/09
CHIEF HIGHWAY ENGINEER DATE

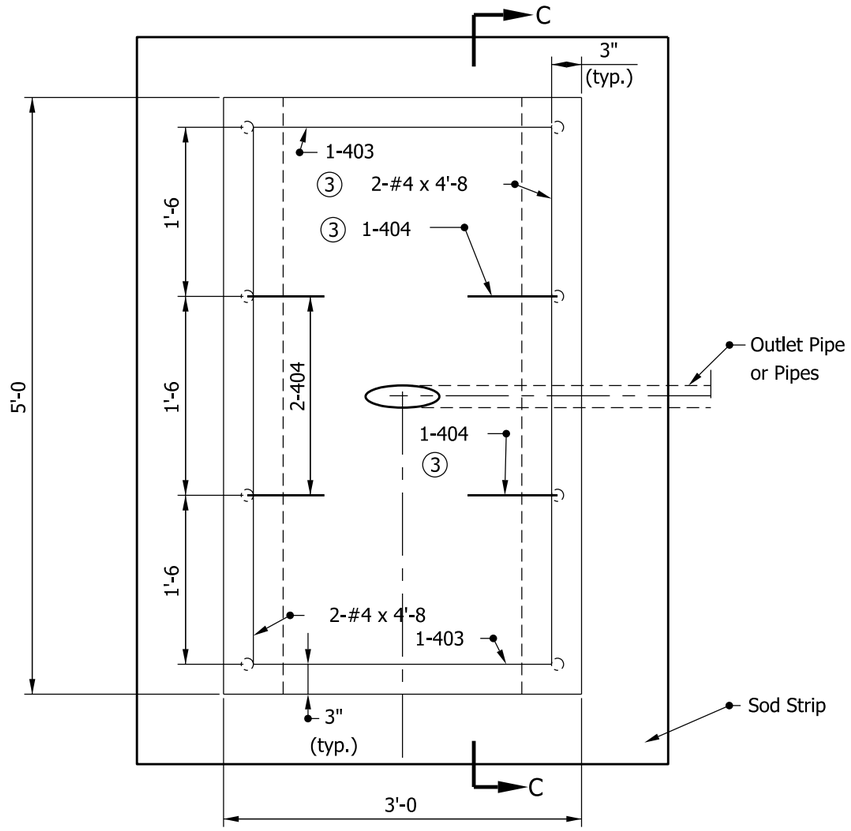

PLAN VIEW

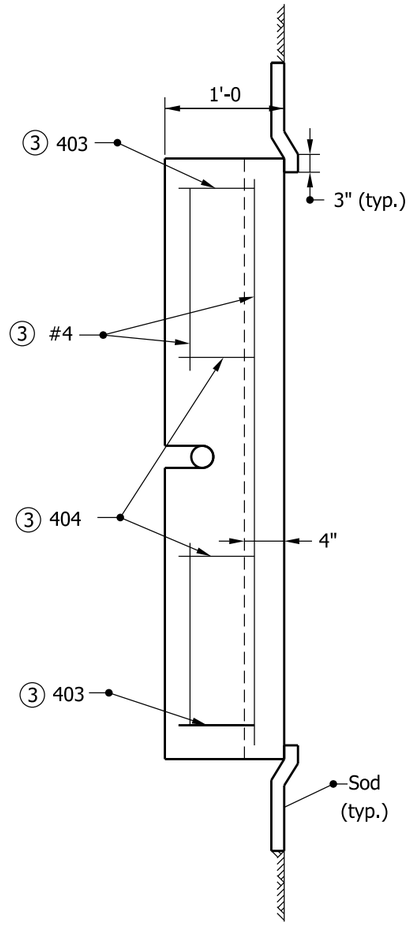

SECTION C-C

NOTE:

1. See Standard Drawing E 718-UNDR-07 for General Notes.

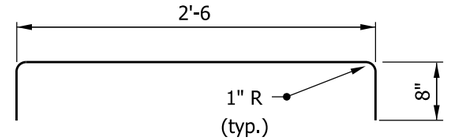

403 x 3'-10

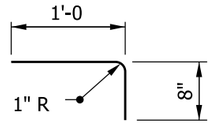

404 x 1'-8

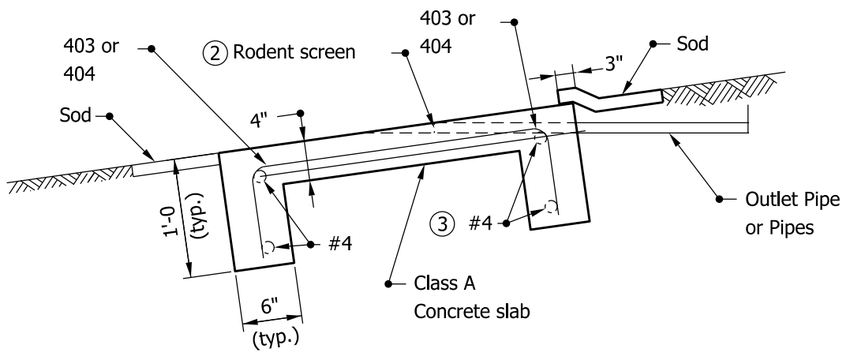

TYPICAL SECTION

INDIANA DEPARTMENT OF TRANSPORTATION

OUTLET PROTECTOR, TYPE 3

SEPTEMBER 2009

STANDARD DRAWING NO. E 718-UNDR-05

RICHARD L. VanCLEAVE REGISTERED No. 9750 STATE OF INDIANA PROFESSIONAL ENGINEER

DESIGN STANDARDS ENGINEER

/s/ Richard L.VanCleave 09/01/09
DESIGN STANDARDS ENGINEER DATE

/s/ Mark A. Miller 09/01/09
CHIEF HIGHWAY ENGINEER DATE

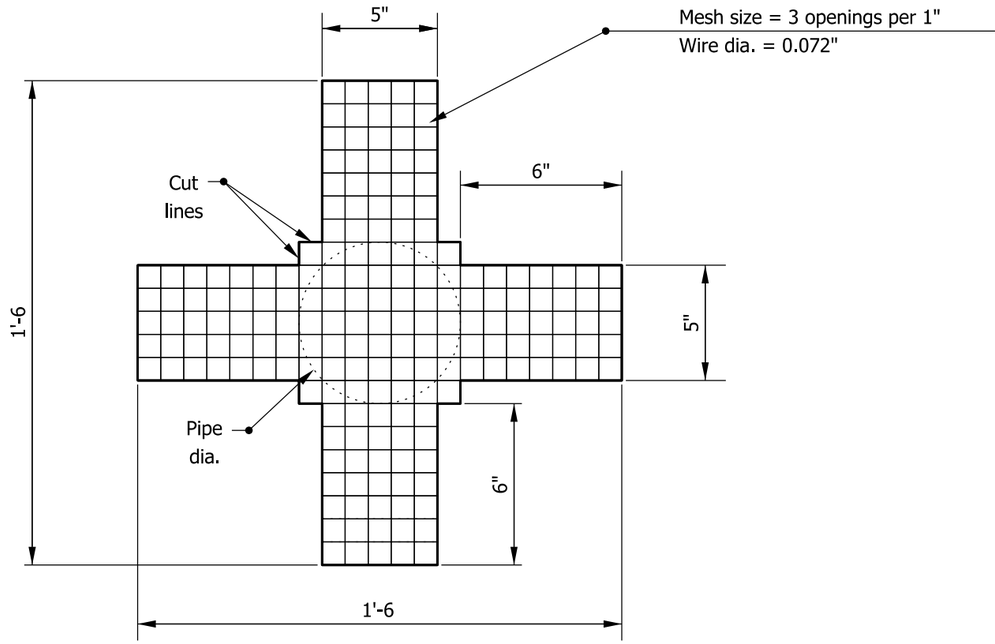

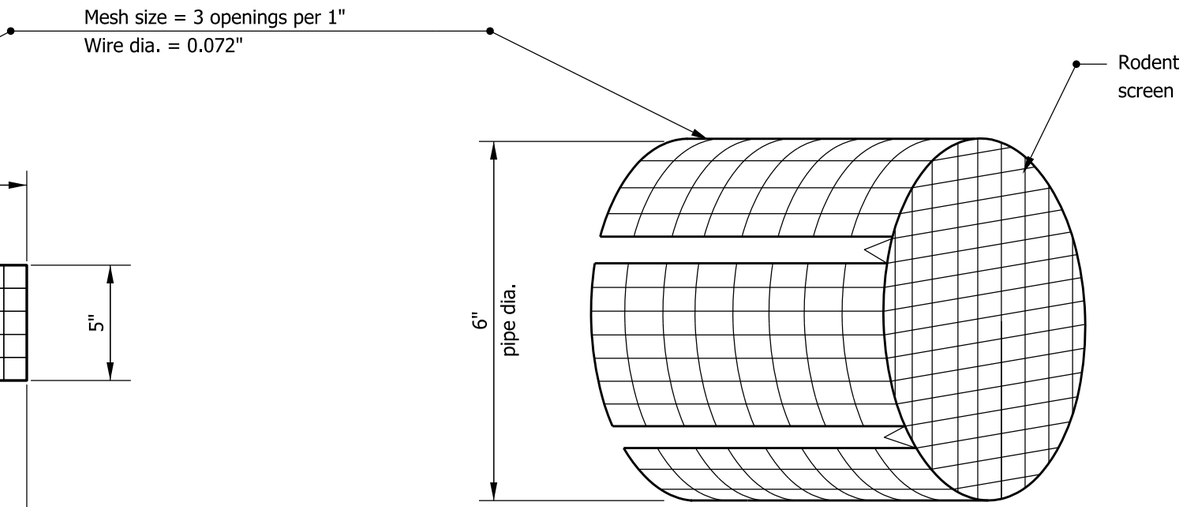

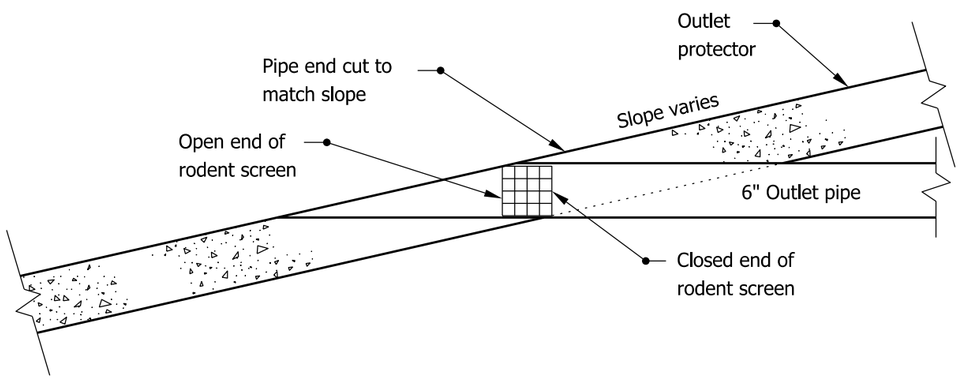

INDIANA DEPARTMENT OF TRANSPORTATION

OUTLET PROTECTOR
RODENT SCREEN

SEPTEMBER 2009

STANDARD DRAWING NO. E 718-UNDR-06

RICHARD L. VanCLEAVE
REGISTERED
NO. 9750
STATE OF INDIANA
PROFESSIONAL ENGINEER

DESIGN STANDARDS ENGINEER

/s/ Richard L.VanCleave *09/01/09*
DESIGN STANDARDS ENGINEER — DATE

/s/ Mark A. Miller *09/01/09*
CHIEF HIGHWAY ENGINEER — DATE

GENERAL NOTES

1. If underdrain outlet-pipe elevations are not shown on Underdrain Table, the minimum outlet-pipe slope shall be 0.3%. The minimum freeboard between the outlet-pipe outfall and the ditch line shall be 1'-0 for median ditches and 2'-0 for side ditches.

2. See Standard Drawing E 718-UNDR-06 for rodent screen details.

3. The #4 transverse bars in the upslope lug may be field cut to accomodate the outlet pipe or pipes. The 404 bars in the upslope lug may be moved to accomodate the outlet pipe or pipes.

APPROXIMATE OUTLET PROTECTEOR QUANTITIES			
TYPE	CONCRETE, CLASS A (cys)	REINFORCING BARS (lb)	SODDING (sys)
1	0.8	29	4.9
2	0.6	25	4.0
3	0.3	22	3.2

INDIANA DEPARTMENT OF TRANSPORTATION

UNDERDRAIN NOTES

SEPTEMBER 2009

STANDARD DRAWING NO. E 718-UNDR-07

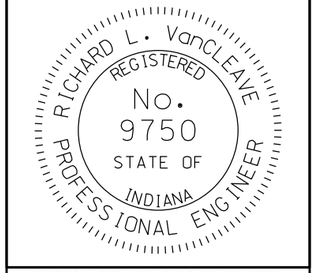

DESIGN STANDARDS ENGINEER

/s/ Richard L.VanCleave 09/01/09
DESIGN STANDARDS ENGINEER DATE

/s/ Mark A. Miller 09/01/09
CHIEF HIGHWAY ENGINEER DATE

EXTRA–QUALITY

COVER (ft.)	3		4		5		6		7		8		9		10		11		12	
SIZE	CLAY	CONC.	CLAY	CONC.	CLAY	CONC.	CLAY	CONC.	CLAY	CONC.	CLAY	CONC.	CLAY	CONC.	CLAY	CONC.	CLAY	CONC.	CLAY	CONC.
6"													X	X	X	X	X	X	X	X
8"									X	X	X	X	X	X						
10"							X	X	X	X	X	X								
12"					X	X	X	X												
15"		X	X	X	X	X														
18"	X	X	X	X	X	X														
21"	X	X	X	X	X	X		X												
24"	X	X	X	X	X	X		X												
27"	X		X		X															
30"	X		X		X		X													

EXTRA–DUTY EXTRA–QUALITY

COVER (ft.)	5	6	7	8	9	10	11	12	13	14	15	16	17	18	19	20
SIZE	CLAY	CONC.	CLAY	CONC.	CLAY	CONC.	CLAY	CONC.	CLAY	CONC.	CLAY	CONC.	CLAY	CONC.	CLAY	CONC.
6"					X	X	X	X	X	X	X	X	X	X	X	X
8"			X	X	X	X	X	X	X	X	X	X	X	X	X	X
10"		X	X	X	X	X	X	X	X	X	X	X	X	X	X	X
12"	X	X	X	X	X	X	X	X	X	X	X	X	X			
15"	X	X	X	X	X	X	X	X	X	X	X	X				
18"	X	X	X	X	X	X	X	X	X	X	X	X	X	X		
21"	X	X	X	X	X	X	X	X	X							
24"	X	X	X	X	X	X	X	X	X	X	X	X	X	X		
27"	X	X	X	X	X	X	X	X								
30"	X	X	X	X	X	X	X	X	X	X	X					

SPECIAL–QUALITY

COVER (ft.)	UP TO 5	UP TO 6	UP TO 7	UP TO 8	UP TO 9	UP TO 15
SIZE	CONC.	CONC.	CONC.	CONC.	CONC.	CONC.
6"	X	X	X	X	X	X
8"	X	X	X	X	X	
10"	X	X	X	X	X	
12"	X	X				
15"	X					
18"	X					
21"	X	X				
24"	X	X				

INDIANA DEPARTMENT OF TRANSPORTATION

DRAINTILE CLASSES

JANUARY 1998

STANDARD DRAWING NO. **E 719–DTCL–01**

ANTHONY L. UREMOVICH REGISTERED No. 18095 STATE OF INDIANA PROFESSIONAL ENGINEER

DESIGN STANDARDS ENGINEER

DETAILS PLACED IN THIS FORMAT 11-15-99

/s/ Anthony L. Uremovich 11-15-99
DESIGN STANDARDS ENGINEER DATE

/s/ Firooz Zandi 11-15-99
CHIEF HIGHWAY ENGINEER DATE

ORIGINALLY APPROVED 1-02-98

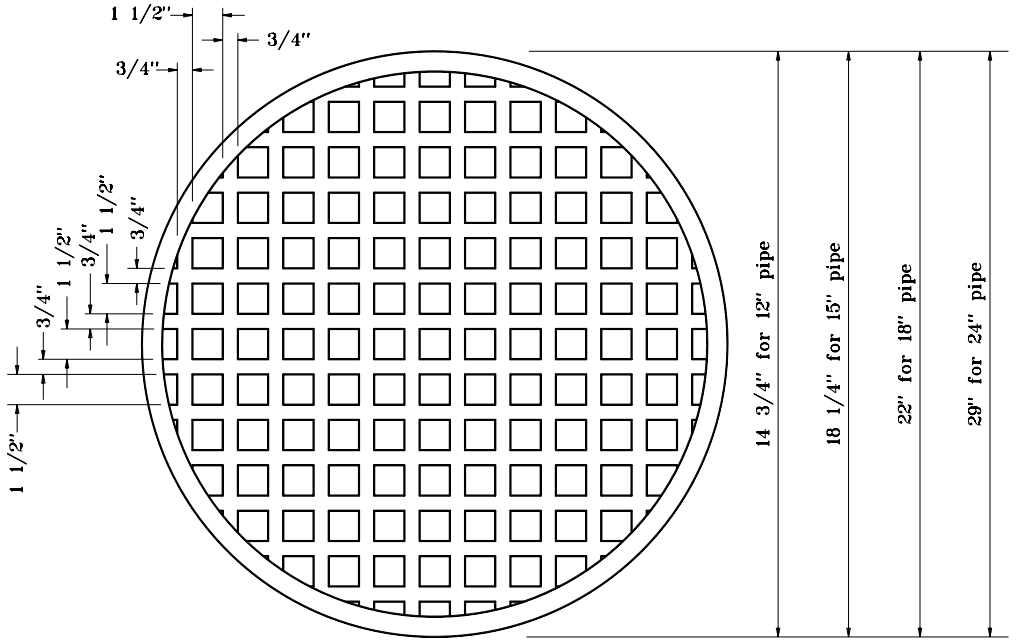

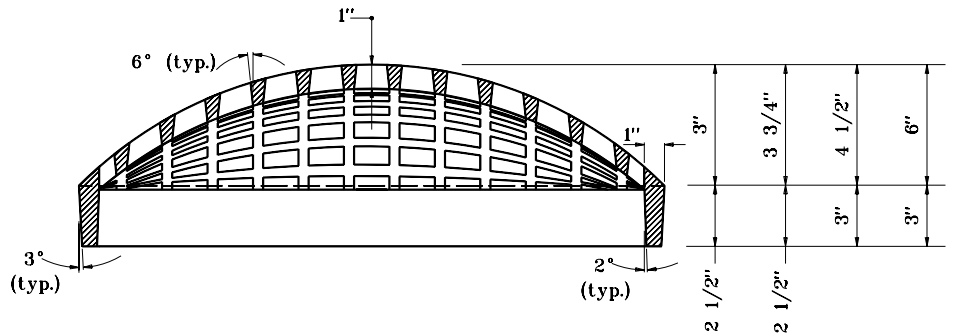

PIPE CATCH BASIN CASTING

INDIANA DEPARTMENT OF TRANSPORTATION

PIPE CATCH BASIN CASTING

APRIL 1995

STANDARD DRAWING NO. **E 720-CBCA-01**

ANTHONY L. UREMOVICH REGISTERED No. 18095 STATE OF INDIANA PROFESSIONAL ENGINEER

DESIGN STANDARDS ENGINEER

DETAILS PLACED IN THIS FORMAT	11-15-99
/s/ Anthony L. Uremovich DESIGN STANDARDS ENGINEER	11-15-99 DATE
/s/ Firooz Zandi CHIEF HIGHWAY ENGINEER	11-15-99 DATE
ORIGINALLY APPROVED	4-03-95

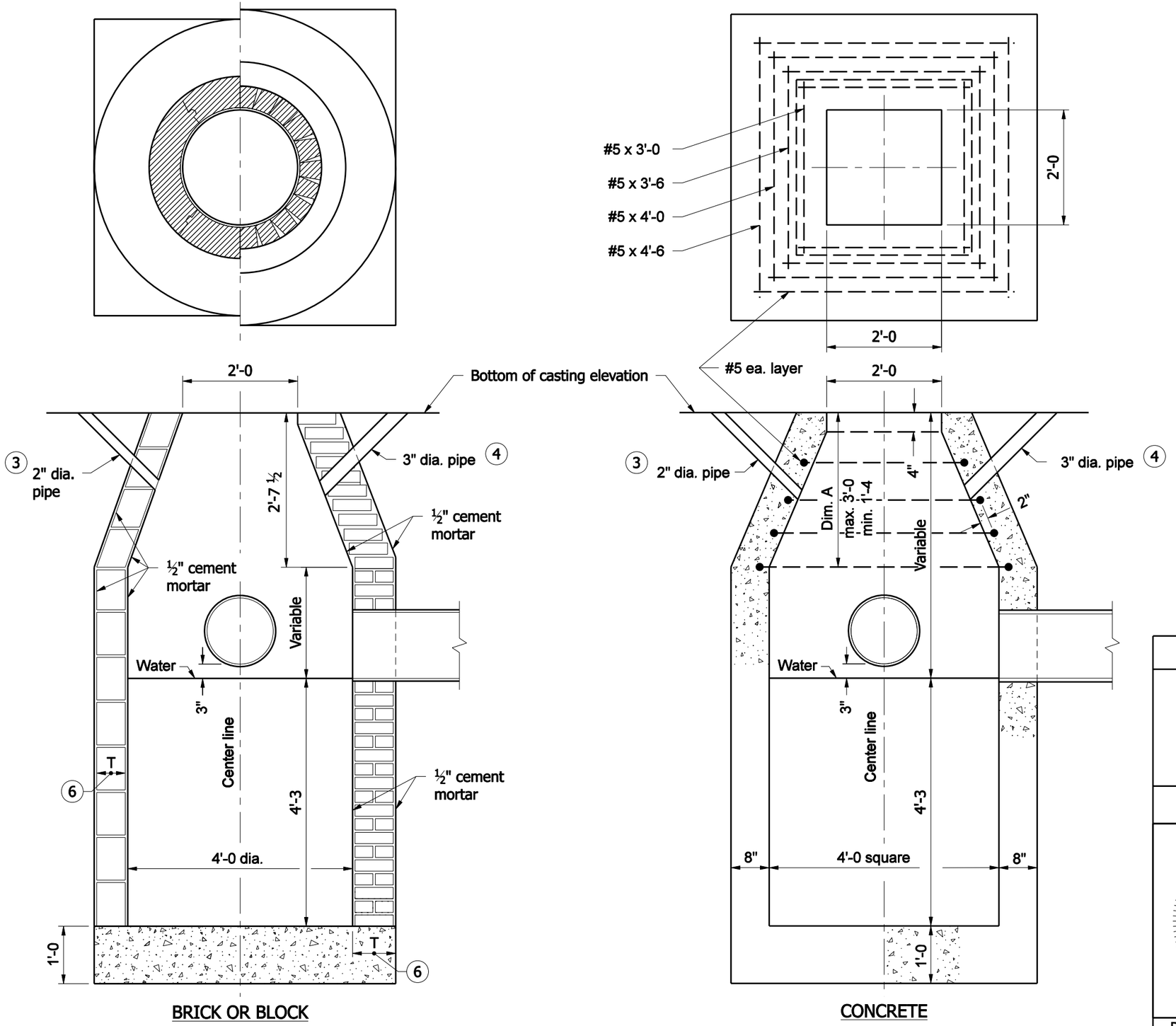

BRICK OR BLOCK

CONCRETE

GENERAL NOTES

1. Brick, block, or concrete may be used.
2. Precast catch basin type W may be substituted for catch basin type A.

(3) 2" dia. pipe drain from bottom of curb to inlet. Aggregate to be placed around inlet end of pipe.

(4) 3" dia. pipe to be kept open for drainage of subgrade or base until surface is placed.

5. Reinforcement required if Dim. A < 2'-6. Reinforcement not required if Dim. A ≥ 2'-6.

(6) T = 8" for brick structure
T = 6" for segmental block structure

INDIANA DEPARTMENT OF TRANSPORTATION

CATCH BASIN TYPE A

SEPTEMBER 2008

STANDARD DRAWING NO. E 720- CBST-01

RICHARD L. VanCLEAVE REGISTERED No. 9750 STATE OF INDIANA PROFESSIONAL ENGINEER

DESIGN STANDARDS ENGINEER

/s/ Richard L. VanCleave 09/02/08
DESIGN STANDARDS ENGINEER — DATE

/s/ Mark A. Miller 09/02/08
CHIEF HIGHWAY ENGINEER — DATE

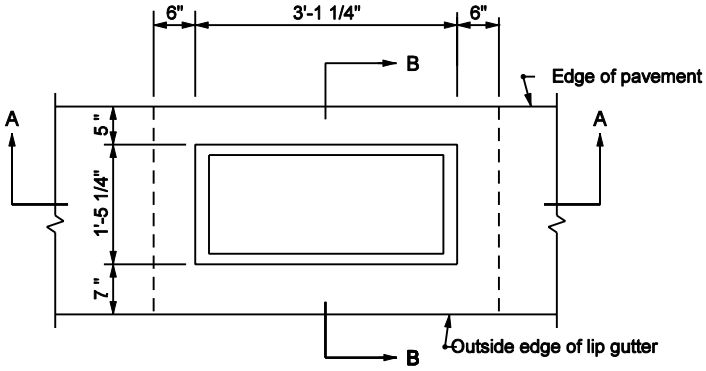

PLAN

NOTES

① These dimensions may be increased or decreased by 1'-0", as directed.

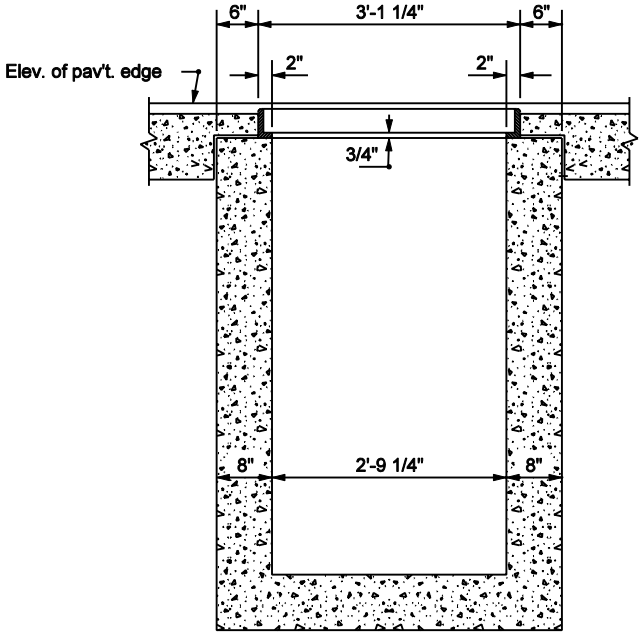

SECTION A-A

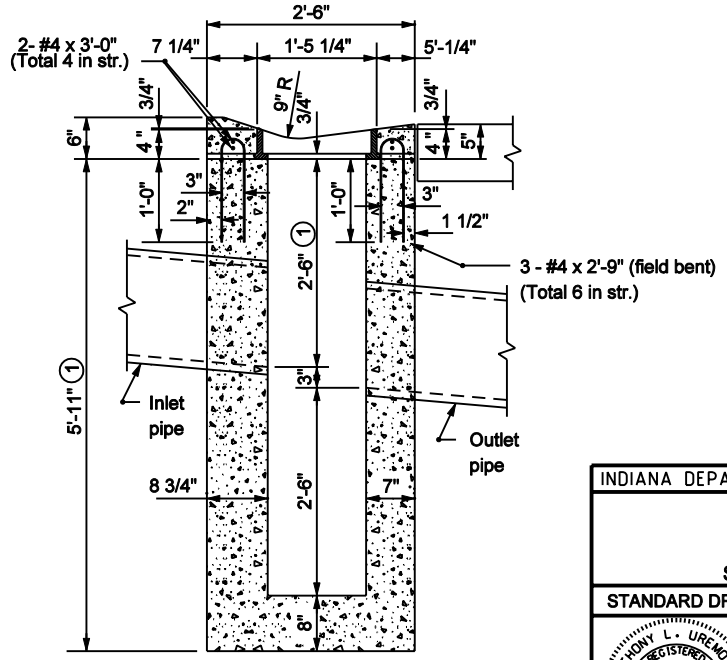

SECTION B-B

INDIANA DEPARTMENT OF TRANSPORTATION

CATCH BASIN
TYPE D

SEPTEMBER 2003

STANDARD DRAWING NO. E 720-CBST-02

REGISTERED ANTHONY L. UREMOVICH No. 18095 STATE OF INDIANA PROFESSIONAL ENGINEER

DESIGN STANDARDS ENGINEER

/s/ Anthony L.Uremovich 3-02-03
DESIGN STANDARDS ENGINEER DATE

/s/ Richard K.Smutzer 3-02-03
CHIEF HIGHWAY ENGINEER DATE

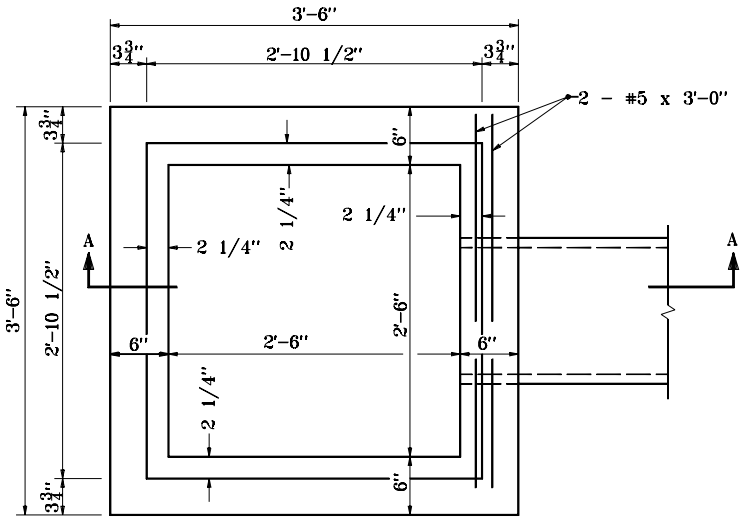

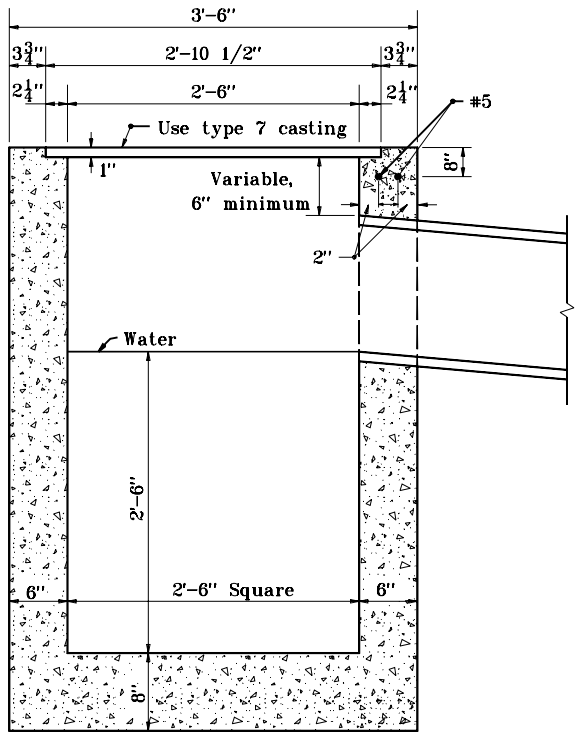

SECTION A-A

INDIANA DEPARTMENT OF TRANSPORTATION

CATCH BASIN
TYPE E

SEPTEMBER 1997

STANDARD DRAWING NO. **E 720-CBST-03**

ANTHONY L. UREMOVICH REGISTERED No. 18095 STATE OF INDIANA PROFESSIONAL ENGINEER

DESIGN STANDARDS ENGINEER

DETAILS PLACED IN THIS FORMAT	11-15-99
/s/ Anthony L. Uremovich	11-15-99
DESIGN STANDARDS ENGINEER	DATE
/s/ Firooz Zandi	11-15-99
CHIEF HIGHWAY ENGINEER	DATE
ORIGINALLY APPROVED	9-01-97

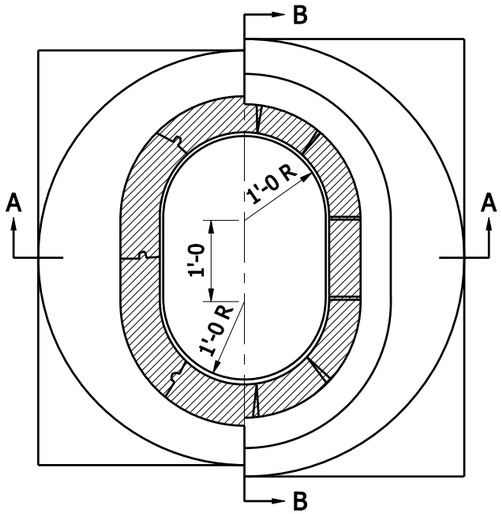

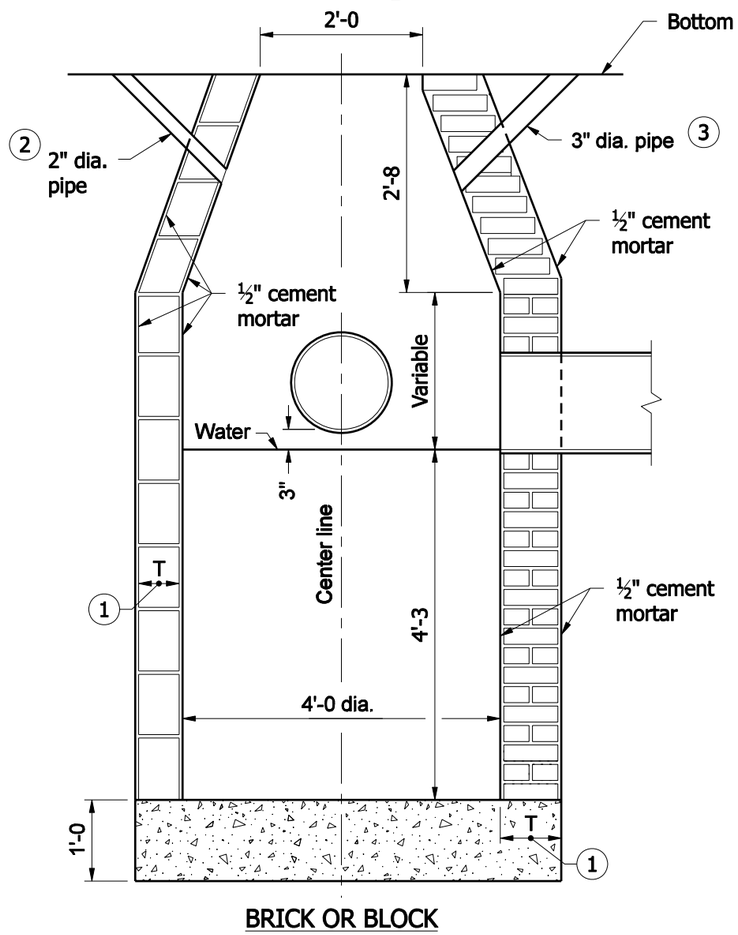

BRICK OR BLOCK

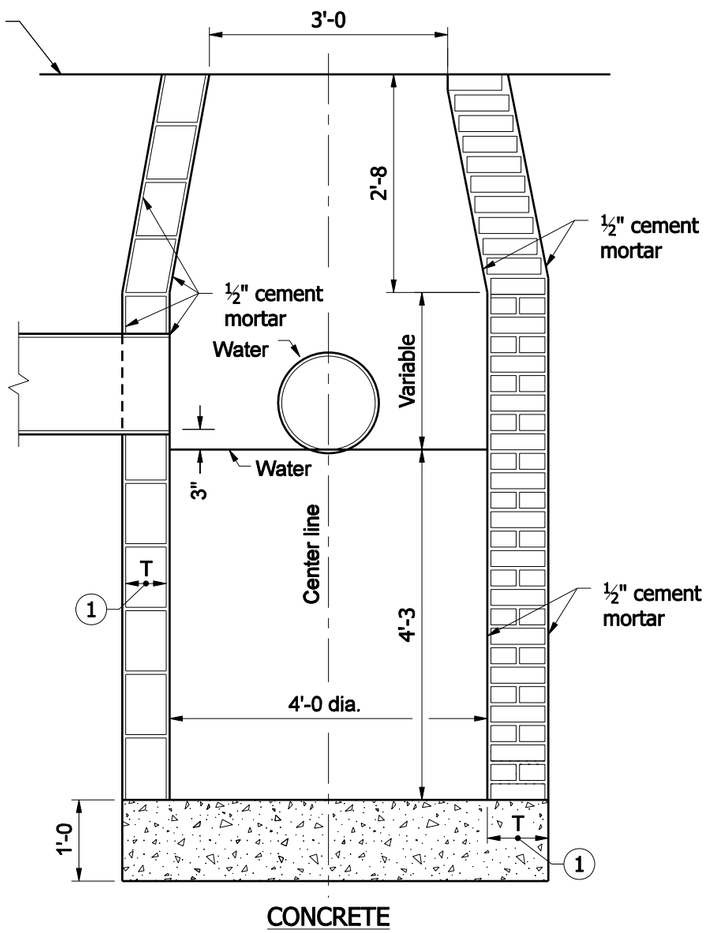

CONCRETE

GENERAL NOTES

1. T = 8" for brick structure
   T = 6" for segmental block structure
2. 2" pipe drain from bottom of curb to inlet. Aggregate to be placed around inlet end of pipe.
3. 3" min. dia. pipe to be kept open for drainage of subgrade or base until surface is placed.

INDIANA DEPARTMENT OF TRANSPORTATION

CATCH BASIN
TYPE J

SEPTEMBER 2008

STANDARD DRAWING NO. E 720- CBST-04

RICHARD L. VanCLEAVE REGISTERED No. 9750 STATE OF INDIANA PROFESSIONAL ENGINEER

DESIGN STANDARDS ENGINEER

/s/ Richard L. VanCleave 09/02/08
DESIGN STANDARDS ENGINEER — DATE

/s/ Mark A. Miller 09/02/08
CHIEF HIGHWAY ENGINEER — DATE

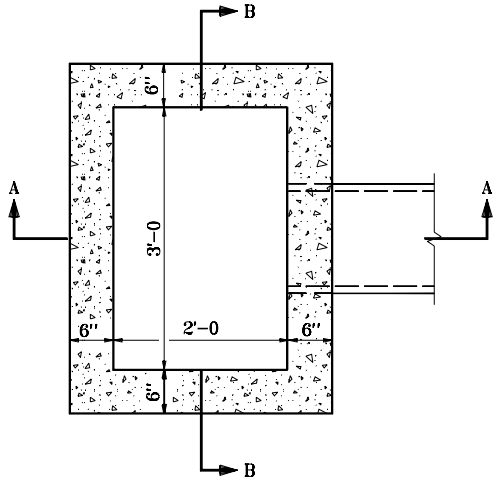

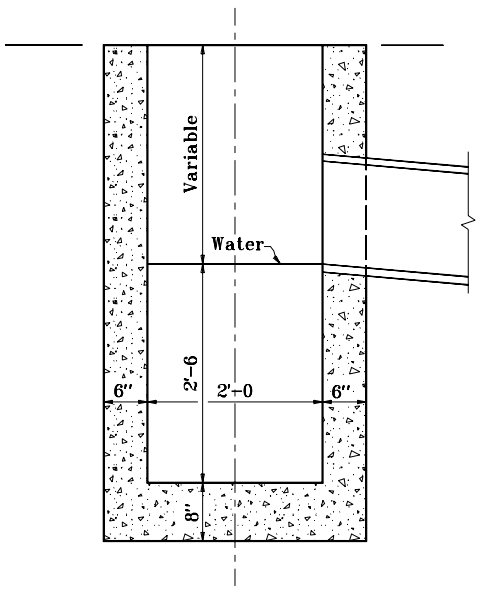

SECTION A–A

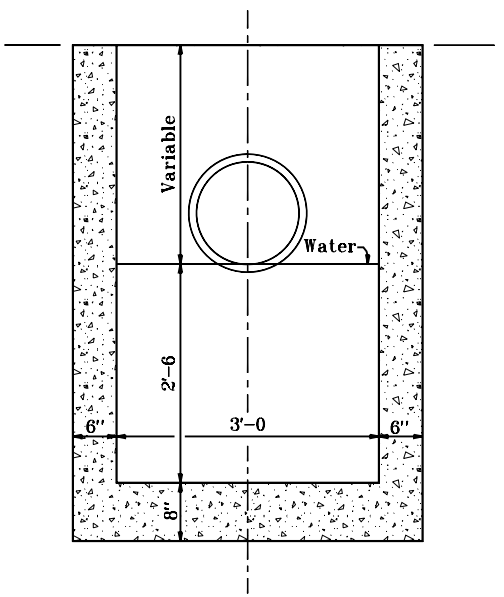

SECTION B–B

INDIANA DEPARTMENT OF TRANSPORTATION

CATCH BASIN
TYPE K

APRIL 1995

STANDARD DRAWING NO. **E 720-CBST-05**

ANTHONY L. UREMOVICH REGISTERED No. 18095 STATE OF INDIANA PROFESSIONAL ENGINEER

DESIGN STANDARDS ENGINEER

DETAILS PLACED IN THIS FORMAT 11-15-99

/s/ Anthony L. Uremovich 11-15-99
DESIGN STANDARDS ENGINEER DATE

/s/ Firooz Zandi 11-15-99
CHIEF HIGHWAY ENGINEER DATE

ORIGINALLY APPROVED 4-03-95

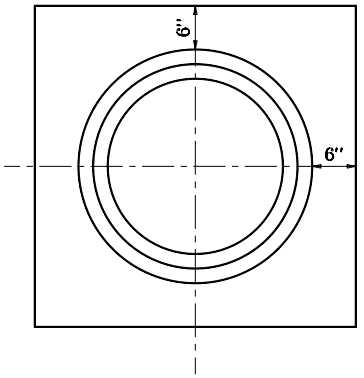

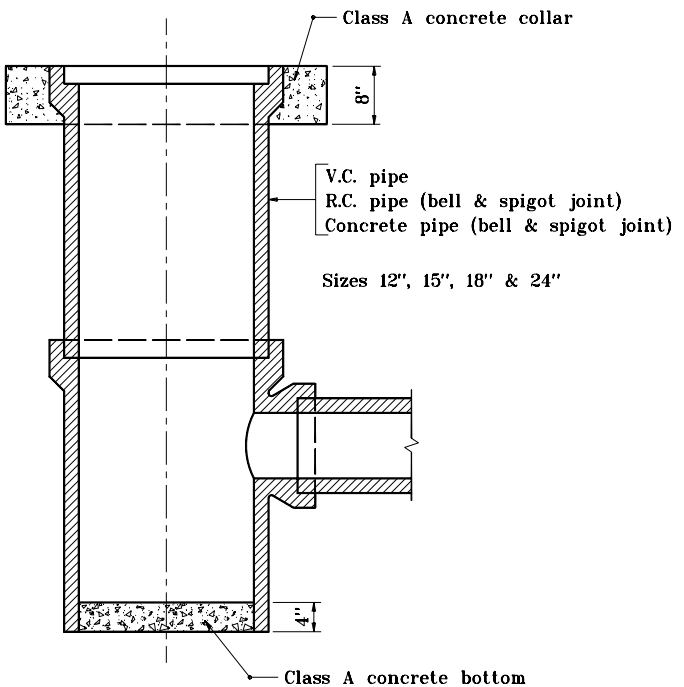

INDIANA DEPARTMENT OF TRANSPORTATION

CATCH BASIN PIPE

APRIL 1995

STANDARD DRAWING NO. **E 720-CBST-06**

ANTHONY L. UREMOVICH REGISTERED No. 18095 STATE OF INDIANA PROFESSIONAL ENGINEER

DESIGN STANDARDS ENGINEER

DETAILS PLACED IN THIS FORMAT 11-15-99

/s/ Anthony L. Uremovich 11-15-99
DESIGN STANDARDS ENGINEER DATE

/s/ Firooz Zandi 11-15-99
CHIEF HIGHWAY ENGINEER DATE

ORIGINALLY APPROVED 4-03-95

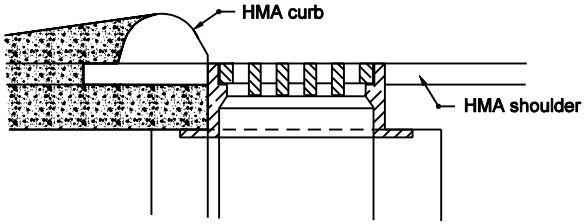

PLACEMENT DETAIL FOR CASTING

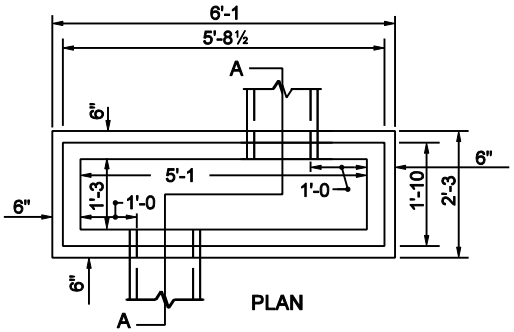

CATCH BASIN TYPE S

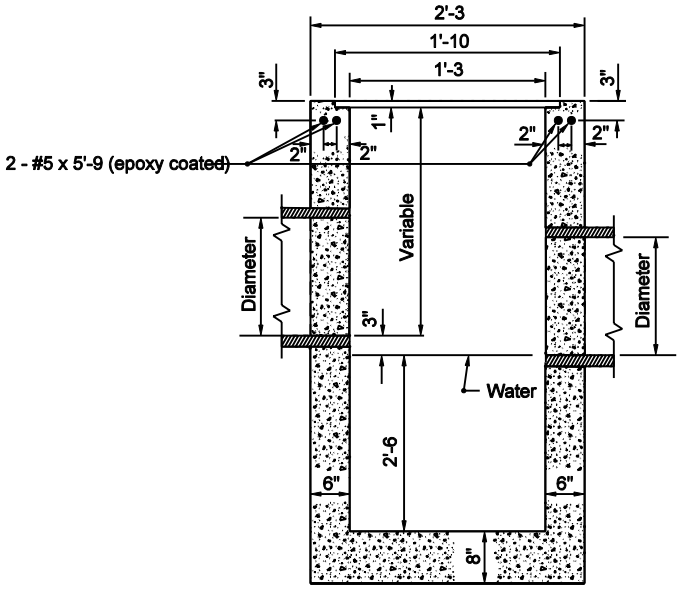

SECTION A-A

INDIANA DEPARTMENT OF TRANSPORTATION

CATCH BASIN
TYPE S

SEPTEMBER 2003

STANDARD DRAWING NO. E 720-CBST-07

RICHARD L. VanCLEAVE REGISTERED No. 9750 STATE OF INDIANA PROFESSIONAL ENGINEER

DESIGN STANDARDS ENGINEER

/s/ Richard L. VanCleave 9-02-03
DESIGN STANDARDS ENGINEER DATE

/s/ Richard K. Smutzer 9-02-03
CHIEF HIGHWAY ENGINEER DATE

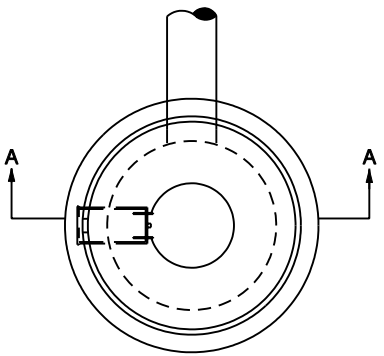

NOTES:

1. Concentric concrete section will not be permited on any manhole that will be under the jurisdiction of the Indianapolis Sanitary District
2. The contractor will be premitted to substitute precast catch basin type "W" for catch basin type "A".

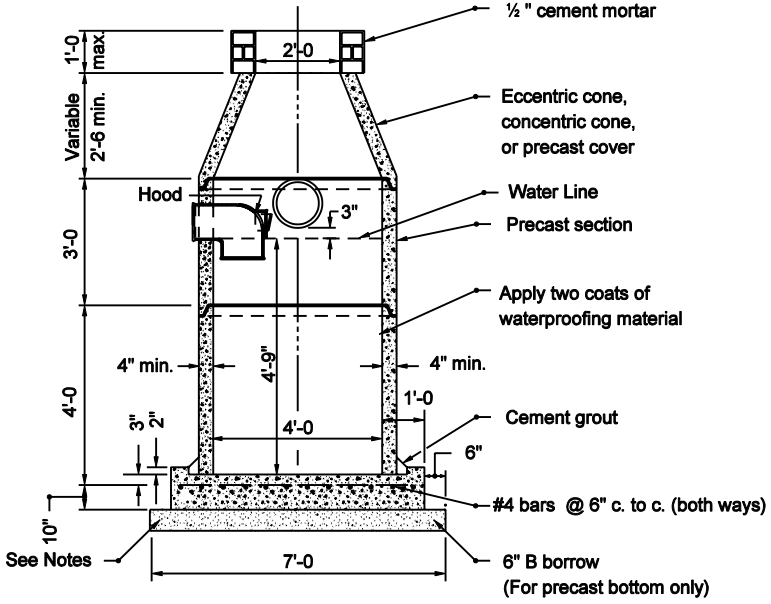

SECTION A-A

INDIANA DEPARTMENT OF TRANSPORTATION

CATCH BASIN
TYPE W

SEPTEMBER 2003

STANDARD DRAWING NO. E 720-CBST-08

RICHARD L. VanCLEAVE REGISTERED No. 9750 STATE OF INDIANA PROFESSIONAL ENGINEER

DESIGN STANDARDS ENGINEER

/s/ Richard L. VanCleave 9-02-03
DESIGN STANDARDS ENGINEER DATE

/s/ Richard K. Smutzer 9-02-03
CHIEF HIGHWAY ENGINEER DATE

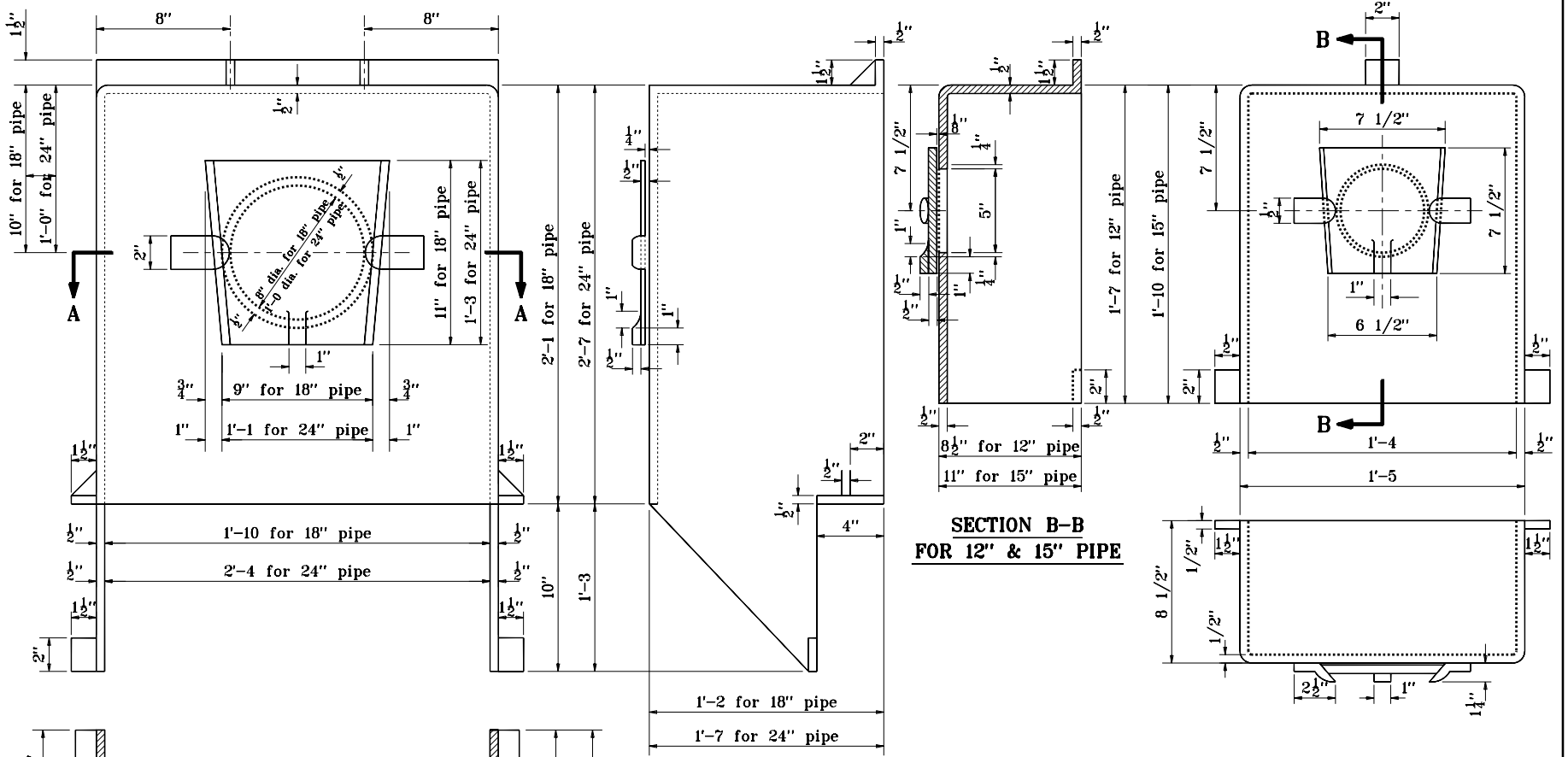

SECTION A–A
FOR 18" & 24" PIPE

SECTION B–B
FOR 12" & 15" PIPE

GENERAL NOTES

1. Hoods may be cast in one piece or may be built up of electrically welded 1/2" steel plates. All hoods shall be gas tight. Steel hoods shall be painted with waterproofing asphalt.

2. Hoods shall be omitted on earth ditch type catch basin unless otherwise specified.

INDIANA DEPARTMENT OF TRANSPORTATION

CATCH BASIN HOOD

MAY 1998

STANDARD DRAWING NO. **E 720–CBST–09**

ANTHONY L. UREMOVICH REGISTERED No. 18095 STATE OF INDIANA PROFESSIONAL ENGINEER

DESIGN STANDARDS ENGINEER

DETAILS PLACED IN THIS FORMAT 11-15-99

/s/ Anthony L. Uremovich 11-15-99
DESIGN STANDARDS ENGINEER DATE

/s/ Firooz Zandi 11-15-99
CHIEF HIGHWAY ENGINEER DATE

ORIGINALLY APPROVED 5-01-98

Str.	Type	Casting Types												
		2	3	4	5	6	7	8	10	12	12A	13	14	15
Catch Basins	A	X	X					X						
	D					X								
	E						X							
	J								X					
	K								X					
	S												X	
	W①	X	X					X						
Inlets	A	X	X					X						
	B													X
	C													X
	D					X								
	E						X							
	F						X							
	G						X							
	H, HA				X									
	J								X					
	M								X					
	N									X				
	P										X			
	R											X		
	S												X	
	T												X	
Manholes	A	X		X				X						
	B	X		X				X						
	C②	X		X				X						
	D	X		X				X						
	E	X		X				X						
	F	X		X				X						
	G	X		X				X						
	H	X		X				X						
	J	X		X				X						
	K	X		X				X						
	L	X		X				X						
	M	X		X				X						
	N	X		X				X						

NOTES

① May be substituted for catch basin type A.

② May be substituted for manhole type A or B.

INDIANA DEPARTMENT OF TRANSPORTATION

COMPATIBILITY OF DRAINAGE STRUCTURES AND CASTINGS

SEPTEMBER 2006

STANDARD DRAWING NO. E 720-CDSC-01

REGISTERED RICHARD L. VanCLEAVE No. 9750 STATE OF INDIANA PROFESSIONAL ENGINEER

DESIGN STANDARDS ENGINEER

/s/ Richard L. VanCleave 9-01-06
DESIGN STANDARDS ENGINEER DATE

/s/ Richard K. Smutzer 9-01-06
CHIEF HIGHWAY ENGINEER DATE

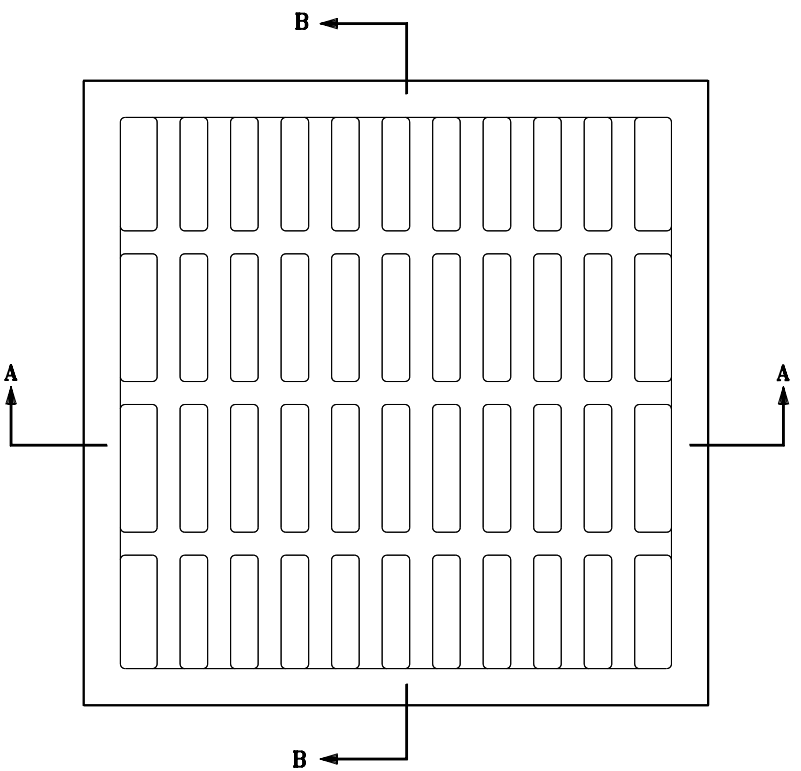

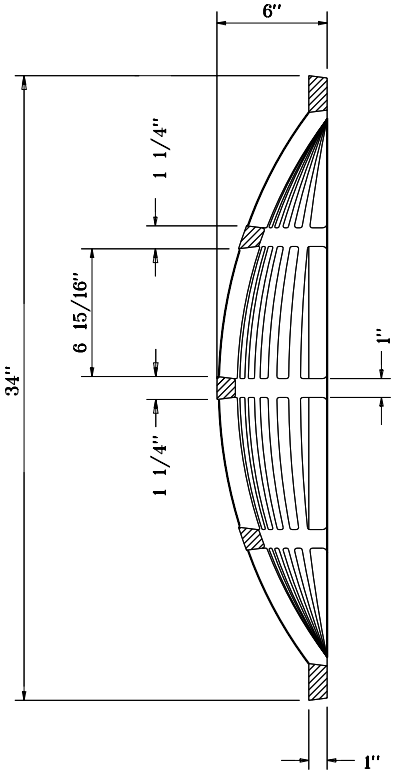

SECTION B–B

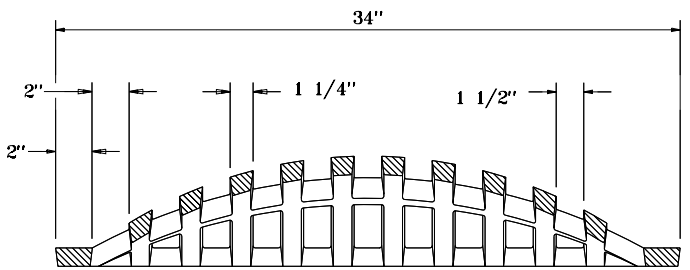

SECTION A–A

EARTH DITCH CASTING TYPE 7

INDIANA DEPARTMENT OF TRANSPORTATION

EARTH DITCH CASTING TYPE 7

SEPTEMBER 1998

STANDARD DRAWING NO. E 720-EDCA-01

ANTHONY L. UREMOVICH REGISTERED No. 18095 STATE OF INDIANA PROFESSIONAL ENGINEER

DESIGN STANDARDS ENGINEER

DETAILS PLACED IN THIS FORMAT 11-15-99

/s/ Anthony L. Uremovich 11-15-99
DESIGN STANDARDS ENGINEER DATE

/s/ Firooz Zandi 11-15-99
CHIEF HIGHWAY ENGINEER DATE

ORIGINALLY APPROVED 9-01-98

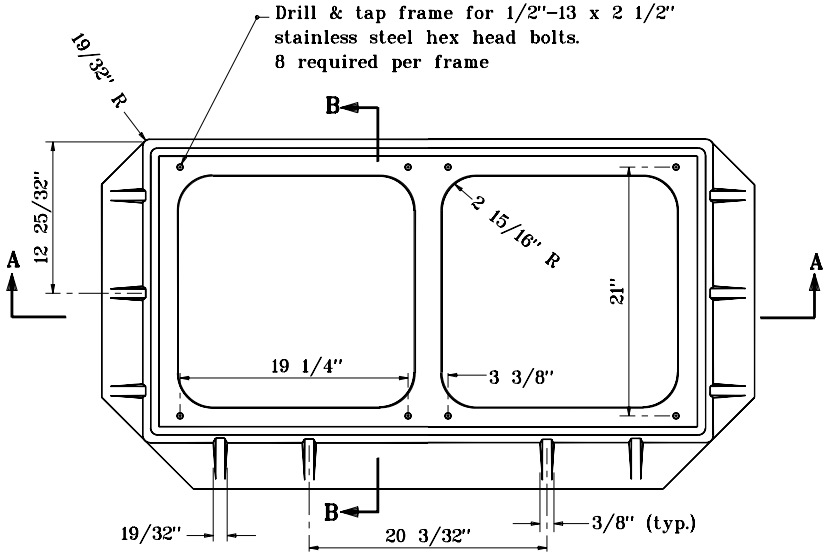

PLAN

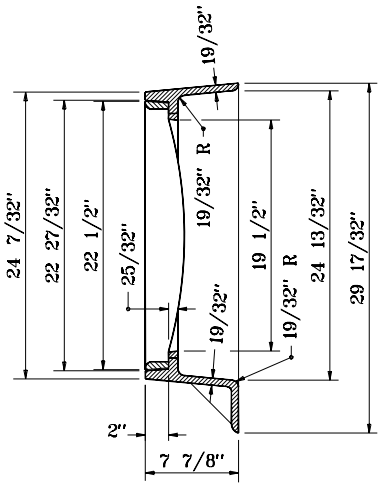

SECTION B-B

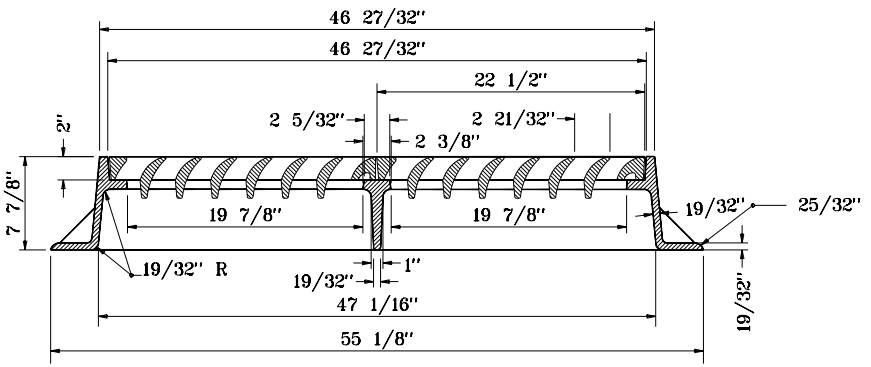

SECTION A-A

FRAME
CASTING TYPE 5

INDIANA DEPARTMENT OF TRANSPORTATION

CASTING TYPE 5
FRAME

SEPTEMBER 2001

STANDARD DRAWING NO. **E 720-ICCA-01**

RICHARD L. VanCLEAVE REGISTERED No. 9750 STATE OF INDIANA PROFESSIONAL ENGINEER

DESIGN STANDARDS ENGINEER

/s/ Anthony L. Uremovich 9-04-01
DESIGN STANDARDS ENGINEER — DATE

/s/ Firooz Zandi 9-04-01
CHIEF HIGHWAY ENGINEER — DATE

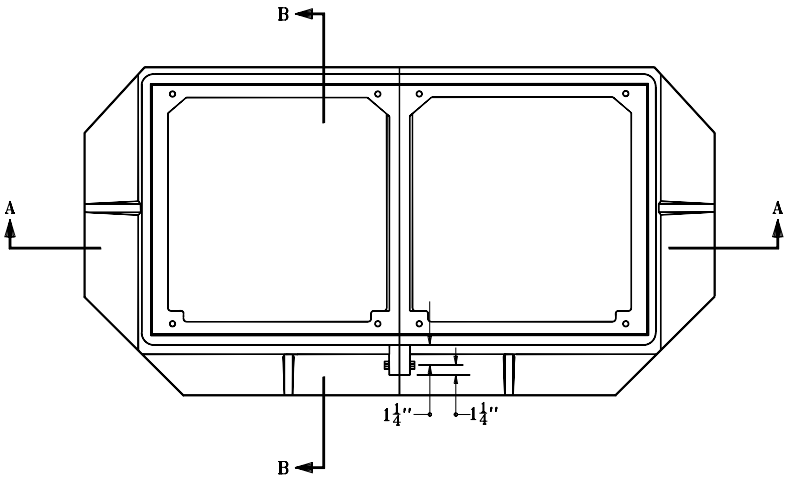

PLAN

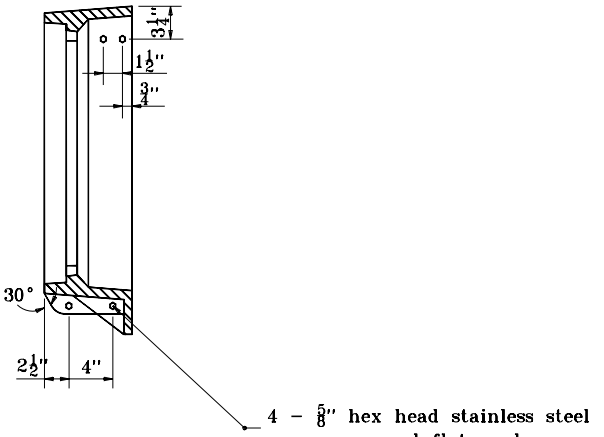

SECTION B–B

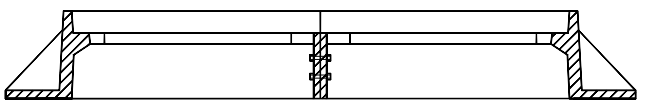

SECTION A–A

INDIANA DEPARTMENT OF TRANSPORTATION

CASTING TYPE 5
ALTERNATE BOLTED FRAME

SEPTEMBER 2001

STANDARD DRAWING NO. **E 720–ICCA–02**

RICHARD L. VanCLEAVE REGISTERED No. 9750 STATE OF INDIANA PROFESSIONAL ENGINEER

DESIGN STANDARDS ENGINEER

/s/ Anthony L. Uremovich 9–04–01
DESIGN STANDARDS ENGINEER — DATE

/s/ Firooz Zandi 9–04–01
CHIEF HIGHWAY ENGINEER — DATE

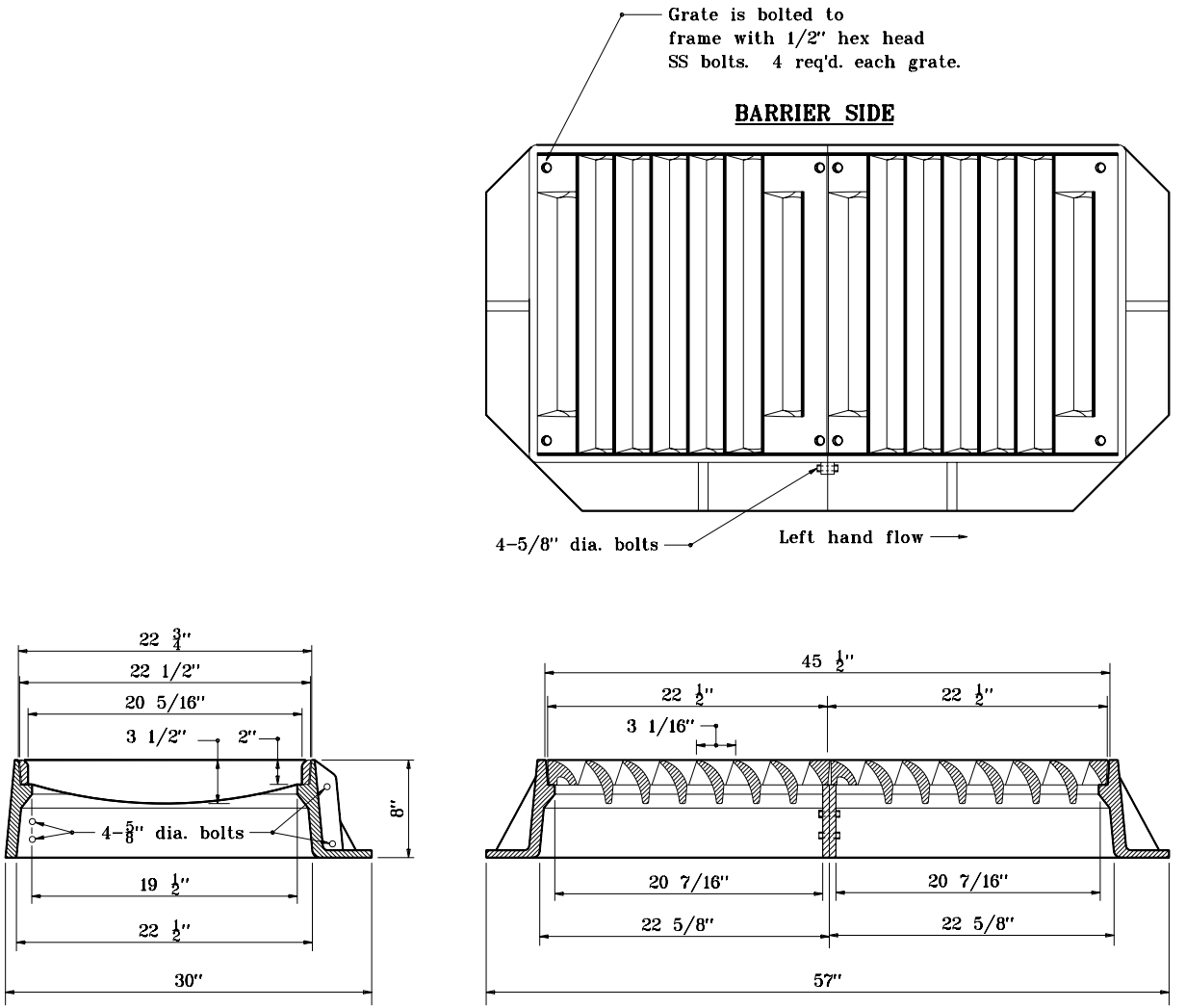

FRAME AND GRATE
CASTING TYPE 5 (ALTERNATE)

INDIANA DEPARTMENT OF TRANSPORTATION

CASTING TYPE 5 (ALTERNATE) FRAME AND GRATE

SEPTEMBER 2001

STANDARD DRAWING NO. **E 720-ICCA-03**

ANTHONY L. UREMOVICH REGISTERED No. 18095 STATE OF INDIANA PROFESSIONAL ENGINEER

DESIGN STANDARDS ENGINEER

/s/ Anthony L. Uremovich 9-04-01
DESIGN STANDARDS ENGINEER — DATE

/s/ Firooz Zandi 9-04-01
CHIEF HIGHWAY ENGINEER — DATE

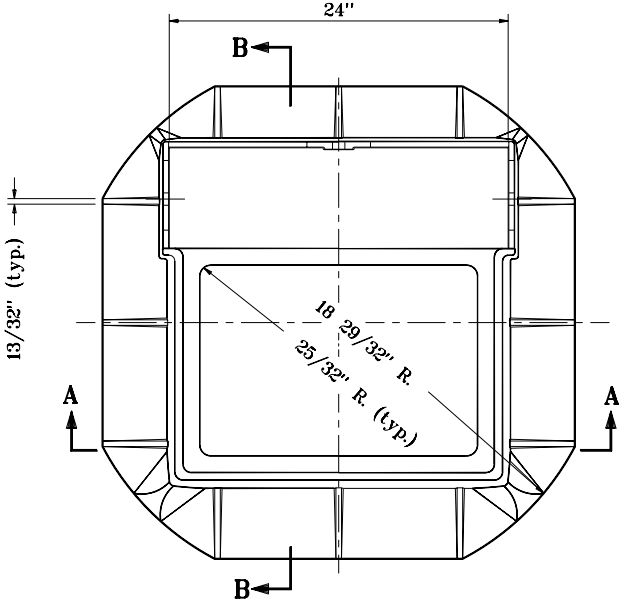

PLAN

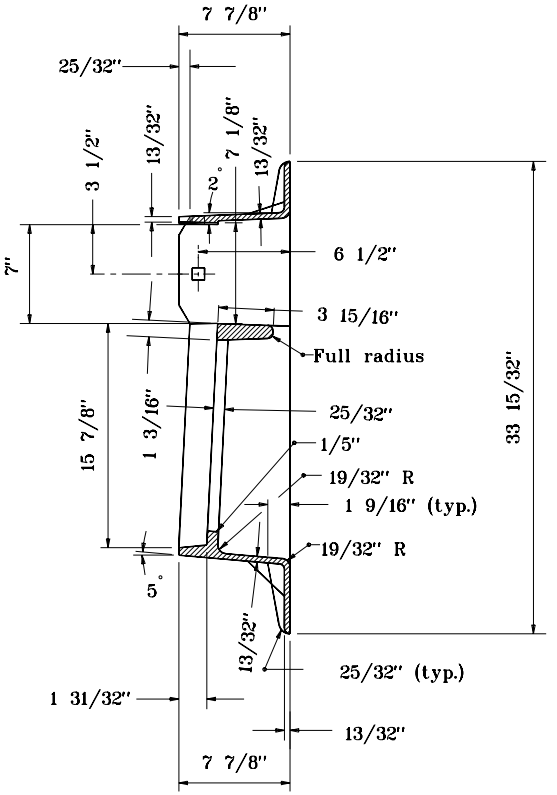

SECTION B–B

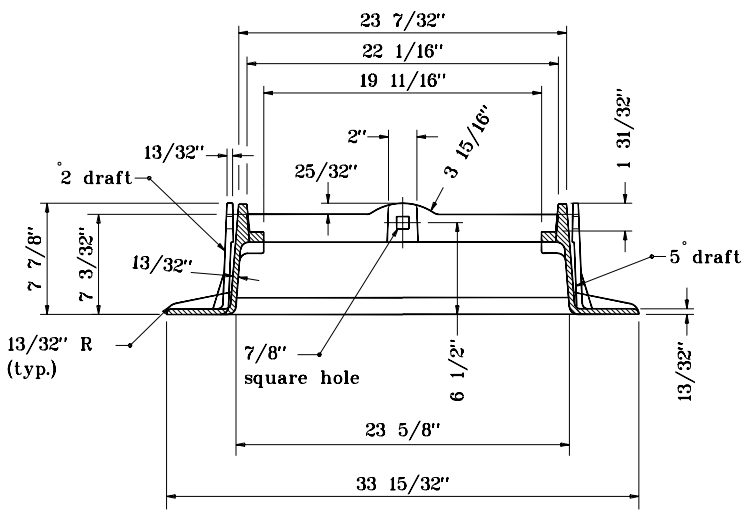

SECTION A–A

FRAME
CASTING TYPE 8

INDIANA DEPARTMENT OF TRANSPORTATION

CASTING TYPE 8
FRAME
SEPTEMBER 1998

STANDARD DRAWING NO. **E 720-ICCA-04**

ANTHONY L. UREMOVICH REGISTERED No. 18095 STATE OF INDIANA PROFESSIONAL ENGINEER

DESIGN STANDARDS ENGINEER

DETAILS PLACED IN THIS FORMAT	11-15-99
/s/ Anthony L. Uremovich	11-15-99
DESIGN STANDARDS ENGINEER	DATE
/s/ Firooz Zandi	11-15-99
CHIEF HIGHWAY ENGINEER	DATE
ORIGINALLY APPROVED	9-01-98

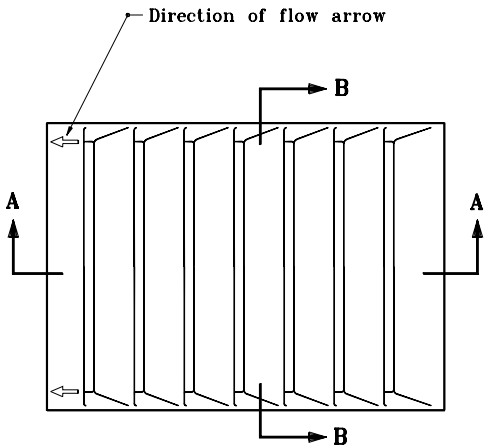

PLAN

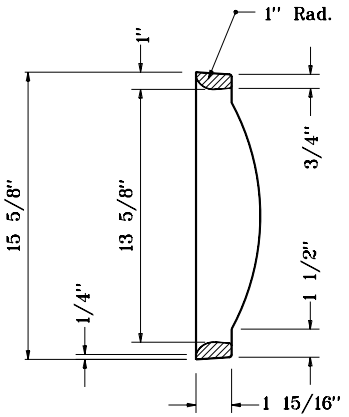

SECTION B–B

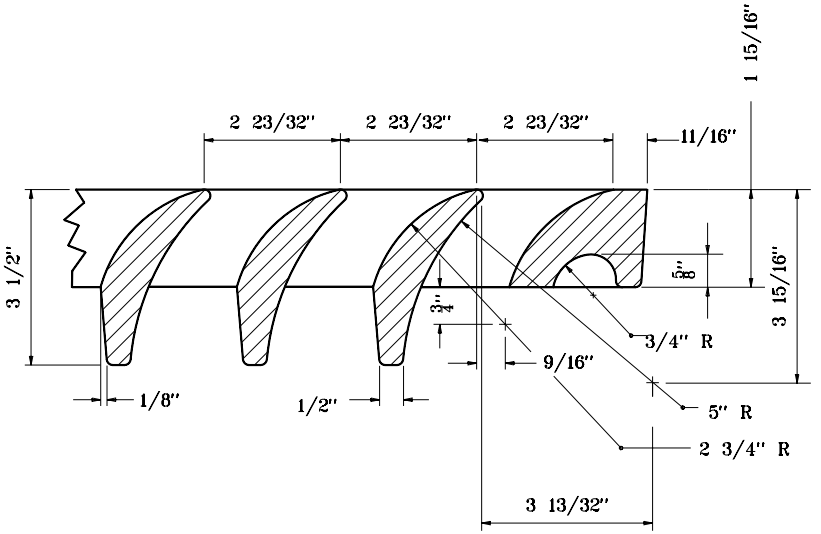

DETAIL OF SECTION A–A

GRATE

CASTING TYPE 8

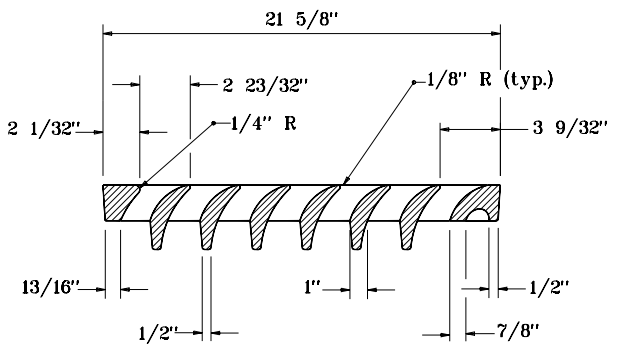

SECTION A–A

INDIANA DEPARTMENT OF TRANSPORTATION

CASTING TYPE 8

GRATE

SEPTEMBER 1998

STANDARD DRAWING NO. E 720-ICCA-05

ANTHONY L. UREMOVICH REGISTERED No. 18095 STATE OF INDIANA PROFESSIONAL ENGINEER

DESIGN STANDARDS ENGINEER

DETAILS PLACED IN THIS FORMAT	11-15-99
/s/ Anthony L. Uremovich	11-15-99
DESIGN STANDARDS ENGINEER	DATE
/s/ Firooz Zandi	11-15-99
CHIEF HIGHWAY ENGINEER	DATE
ORIGINALLY APPROVED	9-01-98

GENERAL NOTES

1. Curb box adjustable from $5\frac{1}{4}$" to $8\frac{3}{4}$".

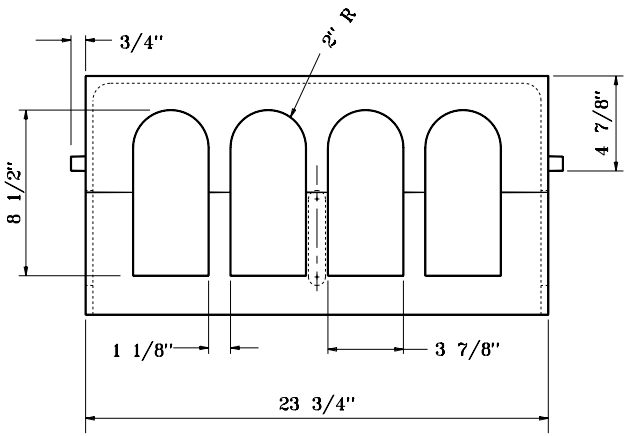

FRONT

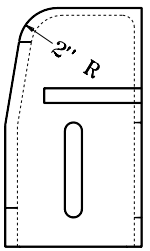

SIDE

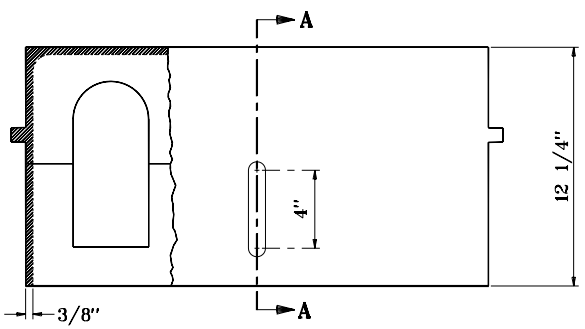

BACK

CURB BOX
CASTING TYPE 8

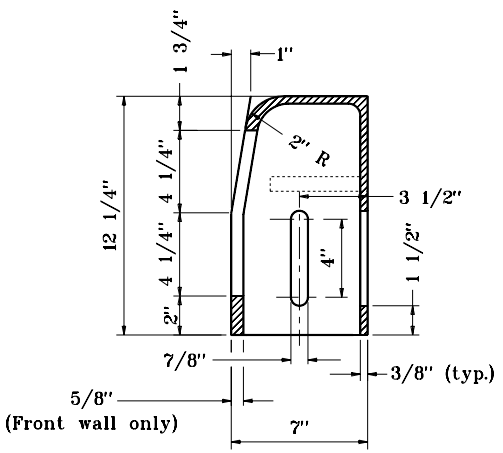

SECTION A-A

INDIANA DEPARTMENT OF TRANSPORTATION

CASTING TYPE 8
CURB BOX

SEPTEMBER 1998

STANDARD DRAWING NO. E 720-ICCA-06

ANTHONY L. UREMOVICH REGISTERED No. 18095 STATE OF INDIANA PROFESSIONAL ENGINEER

DESIGN STANDARDS ENGINEER

DETAILS PLACED IN THIS FORMAT	11-15-99
/s/ Anthony L. Uremovich, DESIGN STANDARDS ENGINEER	11-15-99 DATE
/s/ Firooz Zandi, CHIEF HIGHWAY ENGINEER	11-15-99 DATE
ORIGINALLY APPROVED	9-01-98

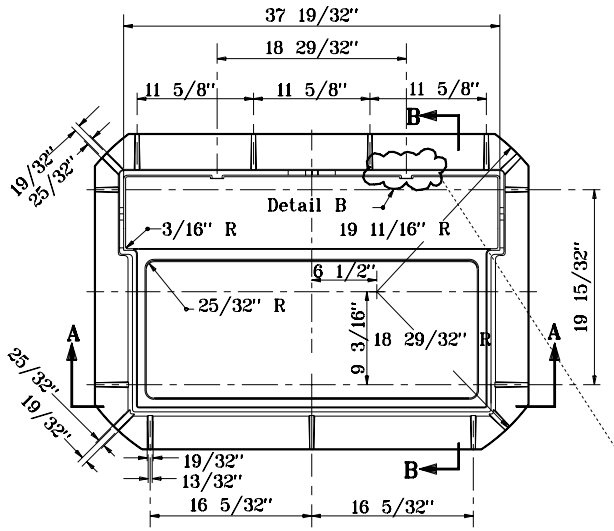

PLAN

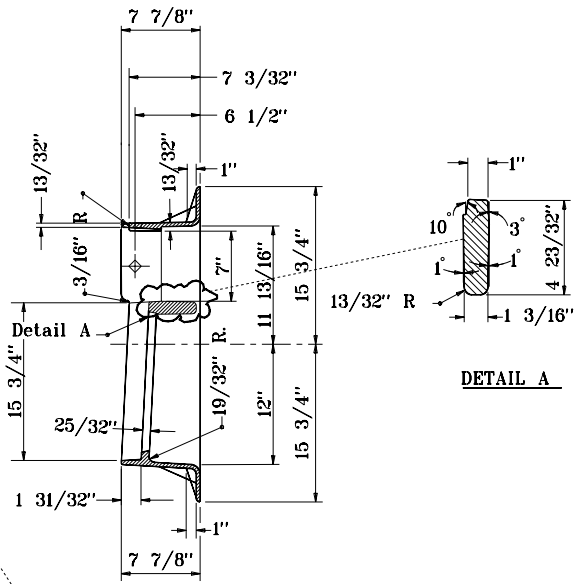

SECTION B–B

DETAIL A

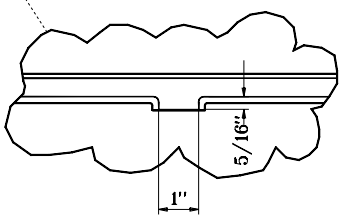

DETAIL B

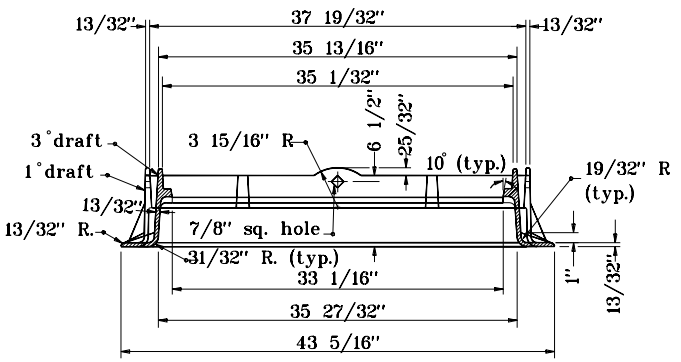

SECTION A–A

FRAME
CASTING TYPE 10

INDIANA DEPARTMENT OF TRANSPORTATION

CASTINGS TYPE 10
FRAME

SEPTEMBER 1998

STANDARD DRAWING NO. **E 720-ICCA-08**

ANTHONY L. UREMOVICH REGISTERED No. 18095 STATE OF INDIANA PROFESSIONAL ENGINEER

DESIGN STANDARDS ENGINEER

DETAILS PLACED IN THIS FORMAT	11-15-99
/s/ Anthony L. Uremovich	11-15-99
DESIGN STANDARDS ENGINEER	DATE
/s/ Firooz Zandi	11-15-99
CHIEF HIGHWAY ENGINEER	DATE
ORIGINALLY APPROVED	9-01-98

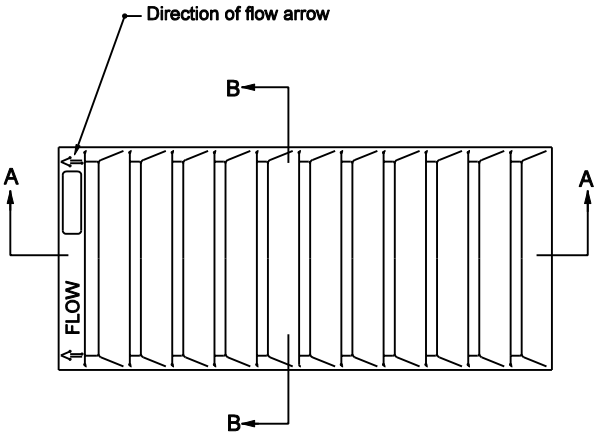

PLAN

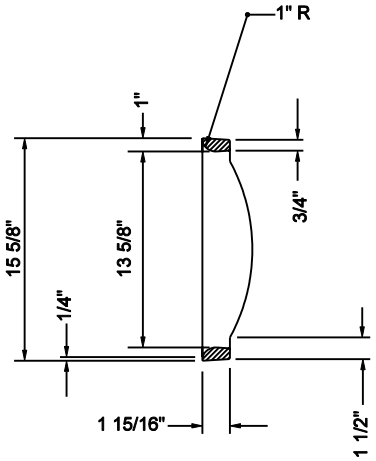

SECTION B-B

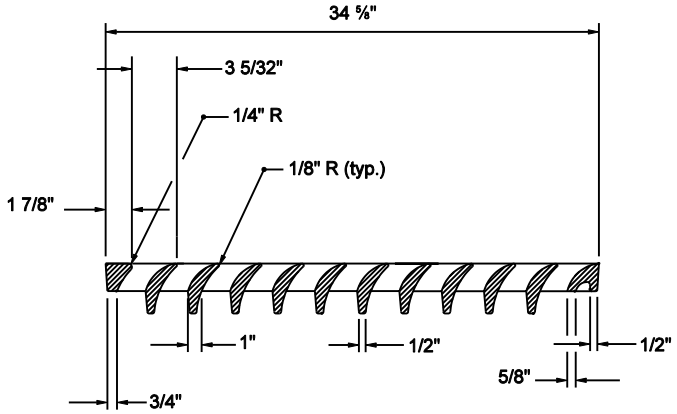

SECTION A-A

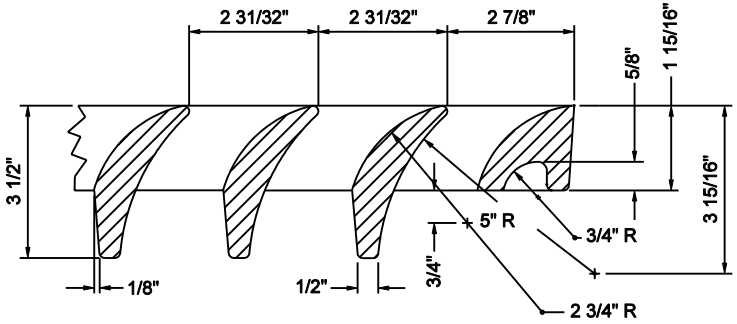

DETAIL OF SECTION A-A

GRATE
CASTING TYPE 10

INDIANA DEPARTMENT OF TRANSPORTATION

CASTING TYPE 10
GRATE

SEPTEMBER 2003

STANDARD DRAWING NO. E 720-ICCA-09

RICHARD L. VanCLEAVE REGISTERED No. 9750 STATE OF INDIANA PROFESSIONAL ENGINEER

DESIGN STANDARDS ENGINEER

/s/ Richard L. VanCleave 9-02-03
DESIGN STANDARDS ENGINEER DATE

/s/ Richard K. Smutzer 9-02-03
CHIEF HIGHWAY ENGINEER DATE

GENERAL NOTES

1. Curb box adjustable 5 1/4" t0 8 3/4".

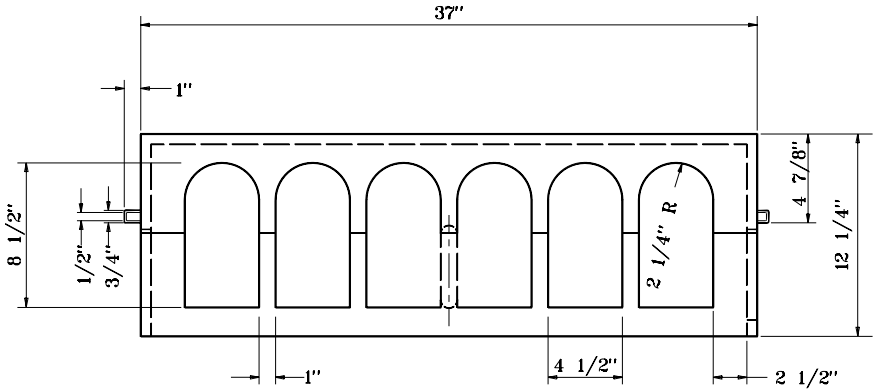

FRONT

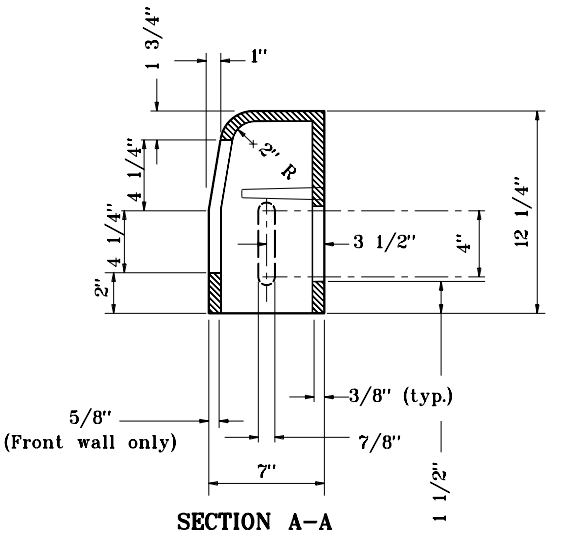

SECTION A-A

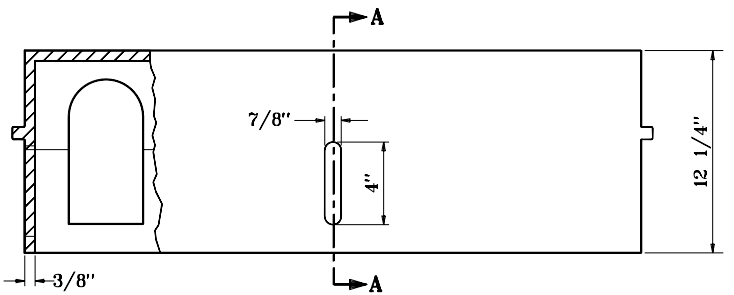

BACK

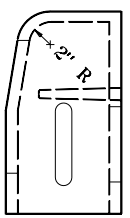

SIDE

CURB BOX
CASTING 10

INDIANA DEPARTMENT OF TRANSPORTATION

CASTING TYPE 10
CURB BOX

SEPTEMBER 1998

STANDARD DRAWING NO. E 720-ICCA-09A

ANTHONY L. UREMOVICH REGISTERED No. 18095 STATE OF INDIANA PROFESSIONAL ENGINEER

DESIGN STANDARDS ENGINEER

DETAILS PLACED IN THIS FORMAT 11-15-99

/s/ Anthony L. Uremovich 11-15-99
DESIGN STANDARDS ENGINEER DATE

/s/ Firooz Zandi 11-15-99
CHIEF HIGHWAY ENGINEER DATE

ORIGINALLY APPROVED 9-01-98

NOTES

1. Bar spacing shall be 1 ⅞" c. to c. minimum and 2 ⅜" c. to c. maximum.
2. The dimensions of the angle iron frame shall be as shown except that the A dimension may vary according to type of grating used.
3. For Section A-A, Section B-B see Standard Drawing E 720-INST-08.

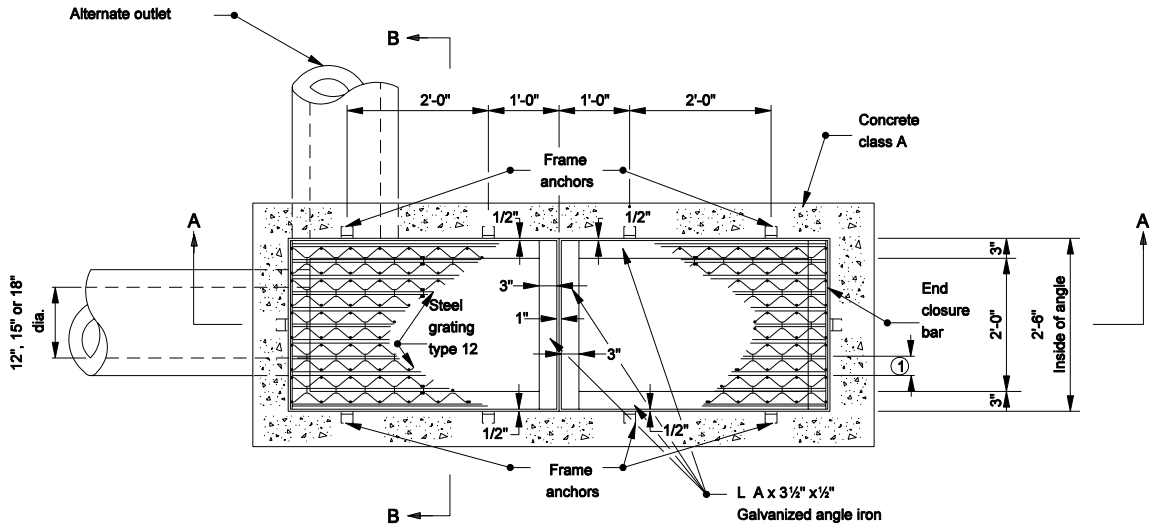

PLAN

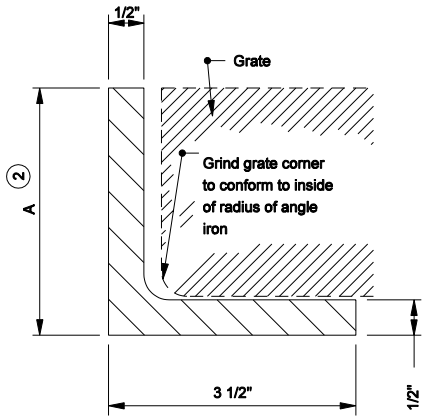

ANGLE IRON FRAME DETAIL

INDIANA DEPARTMENT OF TRANSPORTATION

STEEL GRATING TYPE 12 FRAME AND GRATE

SEPTEMBER 2005

STANDARD DRAWING NO. E 720-ICCA-10

RICHARD L. VanCLEAVE REGISTERED No. 9750 STATE OF INDIANA PROFESSIONAL ENGINEER

DESIGN STANDARDS ENGINEER

/s/ Richard L. VanCleave 9-01-05
DESIGN STANDARDS ENGINEER DATE

/s/ Richard K. Smutzer 9-01-05
CHIEF HIGHWAY ENGINEER DATE

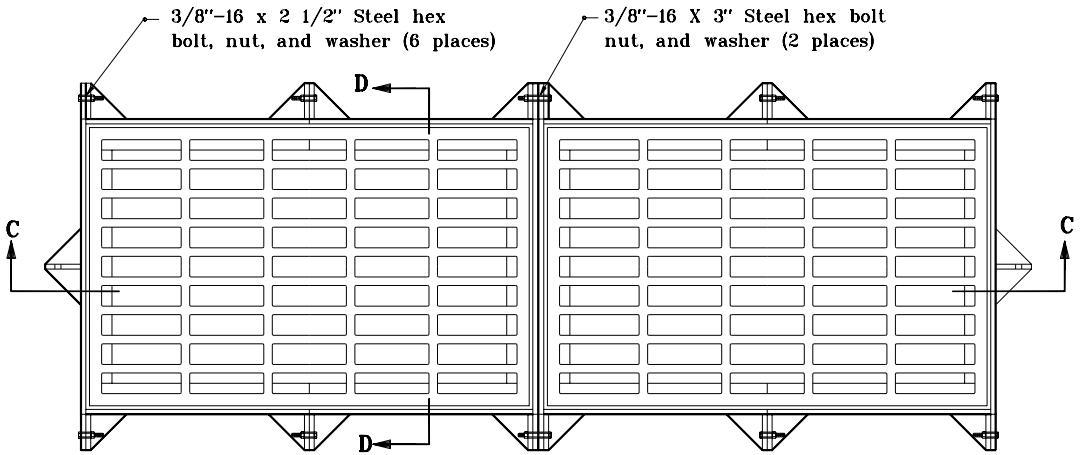

PLAN

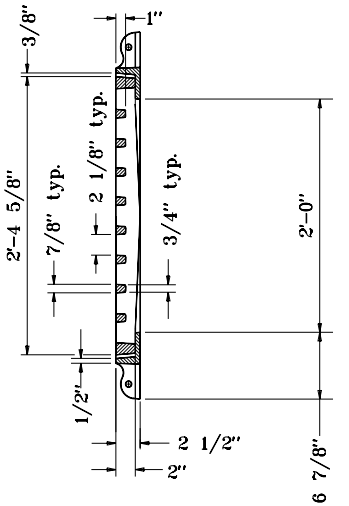

SECTION D-D

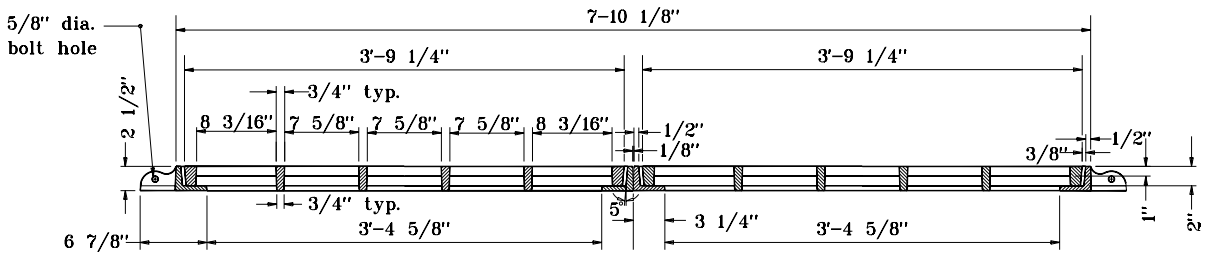

SECTION A-A

GRATE AND FRAME CASTING
ALTERNATE TYPE 12

INDIANA DEPARTMENT OF TRANSPORTATION

CASTING TYPE 12 (ALTERNATE) FRAME AND GRATE

SEPTEMBER 1998

STANDARD DRAWING NO. E 720-ICCA-11

ANTHONY L. UREMOVICH REGISTERED No. 18095 STATE OF INDIANA PROFESSIONAL ENGINEER

DESIGN STANDARDS ENGINEER

DETAILS PLACED IN THIS FORMAT 11-15-99

/s/ Anthony L. Uremovich 11-15-99
DESIGN STANDARDS ENGINEER DATE

/s/ Firooz Zandi 11-15-99
CHIEF HIGHWAY ENGINEER DATE

ORIGINALLY APPROVED 9-01-98

GENERAL NOTES

1. Spacing shall be $1\frac{7}{8}$" c. to c. min., and $2\frac{3}{8}$" c. to c. max.
2. The dimensions of the angle iron frame shall be as shown except that the A dimension may vary according to type of grating used.

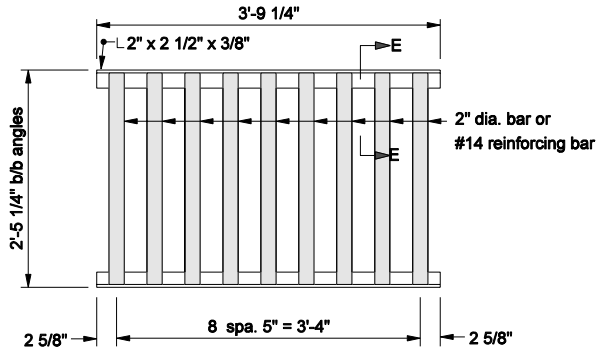

ALTERNATE STEEL GRATING
(To be used with steel frame type 12A)

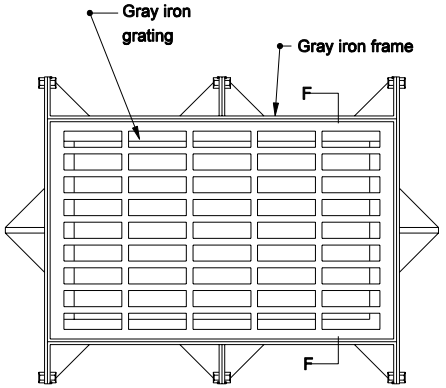

GRATE AND FRAME CASTING
ALTERNATE TYPE 12A

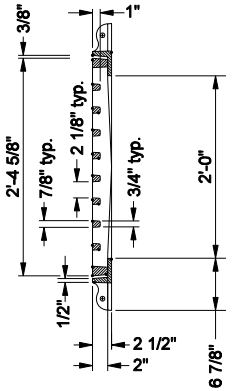

SECTION F-F

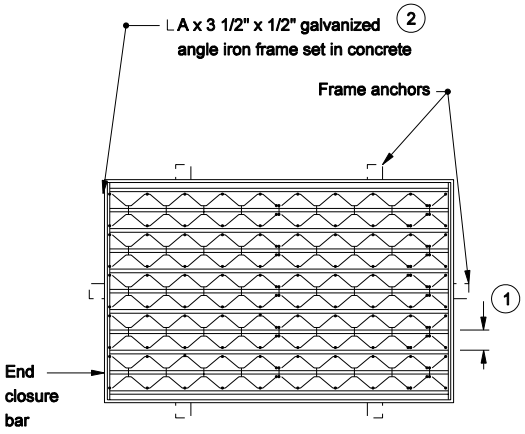

STEEL GRATING AND FRAME
TYPE 12A

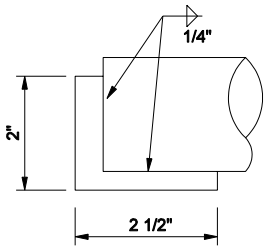

SECTION E-E

INDIANA DEPARTMENT OF TRANSPORTATION

STEEL GRATING TYPE 12A
FRAME AND GRATE

SEPTEMBER 2005

STANDARD DRAWING NO. E 720-ICCA-12

RICHARD L. VanCLEAVE REGISTERED No. 9750 STATE OF INDIANA PROFESSIONAL ENGINEER
DESIGN STANDARDS ENGINEER

/s/ Richard L. VanCleave 9-01-05
DESIGN STANDARDS ENGINEER DATE

/s/ Richard K. Smutzer 9-01-05
CHIEF HIGHWAY ENGINEER DATE

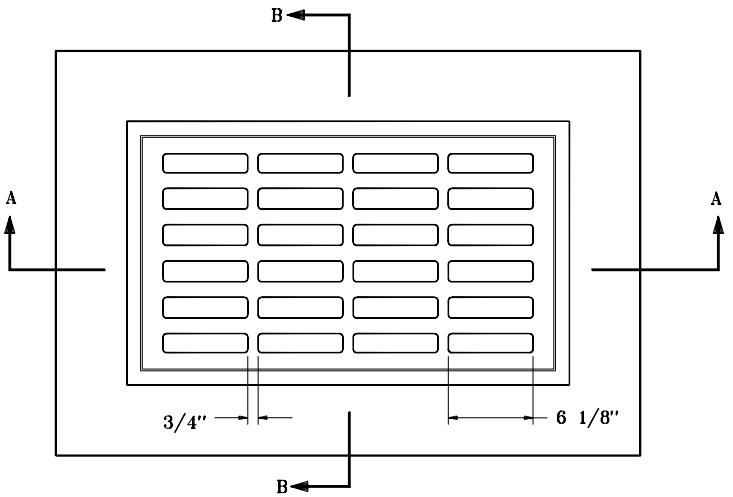

PLAN

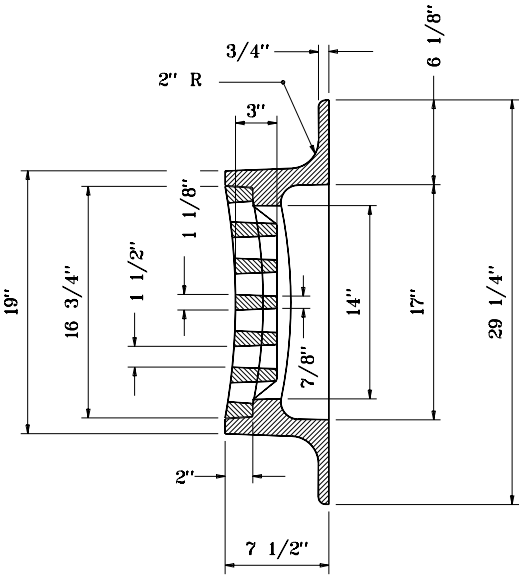

SECTION B–B

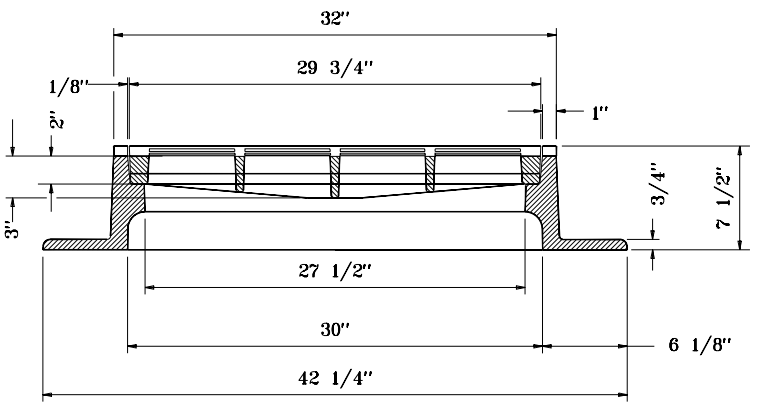

SECTION A–A

FRAME AND GRATE
CASTING TYPE 13

INDIANA DEPARTMENT OF TRANSPORTATION

CASTING TYPE 13
FRAME & GRATE

SEPTEMBER 1998

STANDARD DRAWING NO. **E 720-ICCA-13**

ANTHONY L. UREMOVICH REGISTERED No. 18095 STATE OF INDIANA PROFESSIONAL ENGINEER

DESIGN STANDARDS ENGINEER

DETAILS PLACED IN THIS FORMAT	11-15-99
/s/ Anthony L. Uremovich	11-15-99
DESIGN STANDARDS ENGINEER	DATE
/s/ Firooz Zandi	11-15-99
CHIEF HIGHWAY ENGINEER	DATE
ORIGINALLY APPROVED	9-01-98

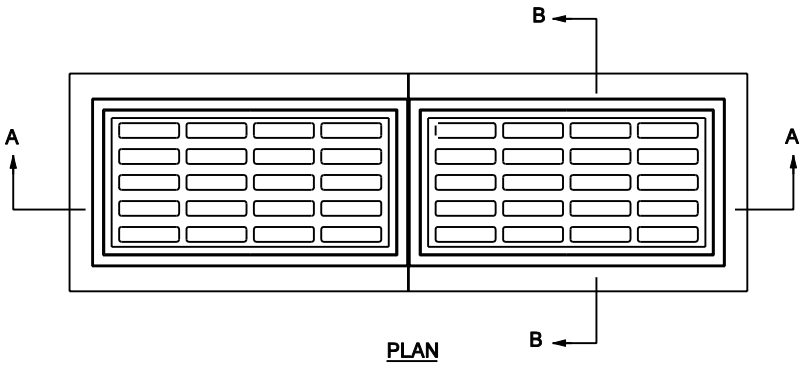

PLAN

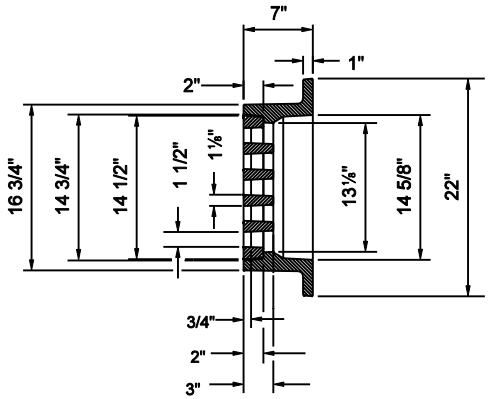

SECTION B-B

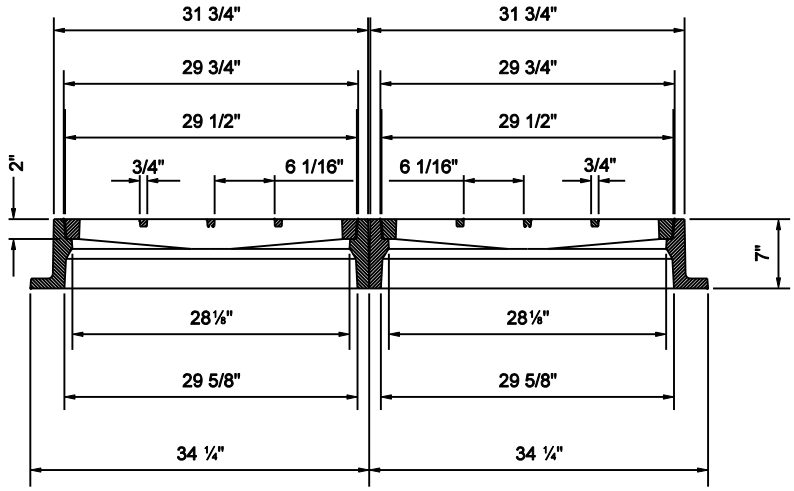

SECTION A-A

FRAME AND GRATE
CASTING TYPE 14

INDIANA DEPARTMENT OF TRANSPORTATION

CASTING TYPE 14
FRAME AND GRATE

SEPTEMBER 2003

STANDARD DRAWING NO. E 720-ICCA-15

RICHARD L. VanCLEAVE REGISTERED No. 9750 STATE OF INDIANA PROFESSIONAL ENGINEER

DESIGN STANDARDS ENGINEER

/s/ Richard L. VanCleave 9-02-03
DESIGN STANDARDS ENGINEER DATE

/s/ Richard K. Smutzer 9-02-03
CHIEF HIGHWAY ENGINEER DATE

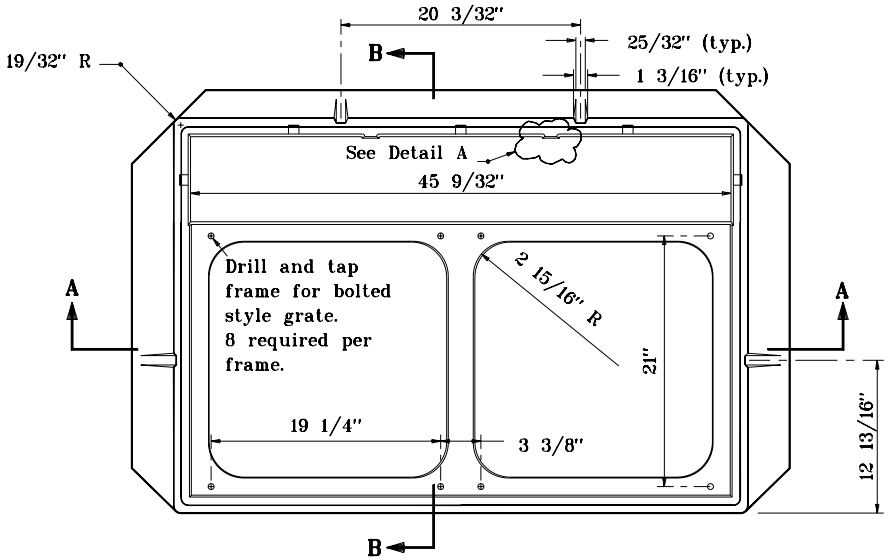

PLAN

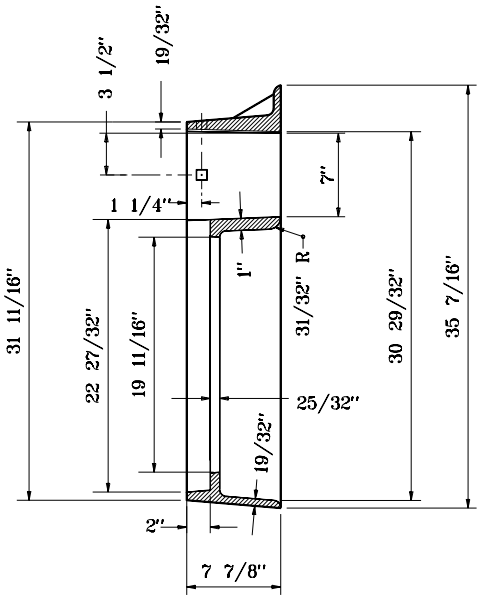

SECTION B–B

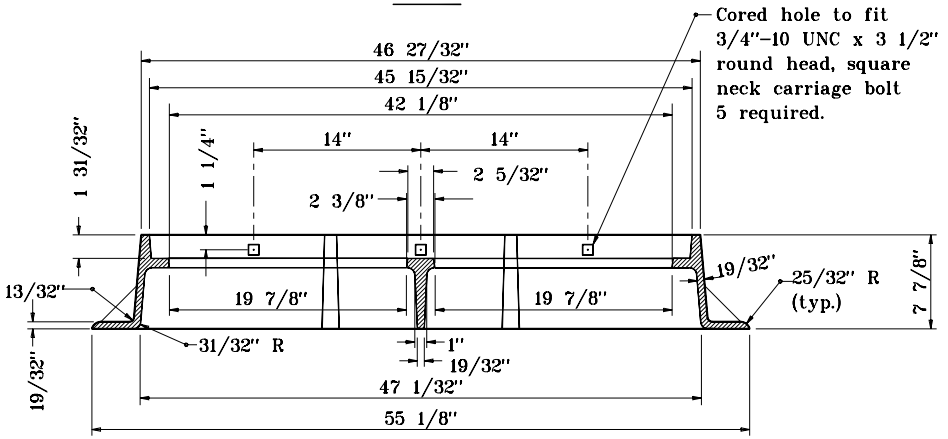

SECTION A–A

FRAME
CASTING TYPE 15

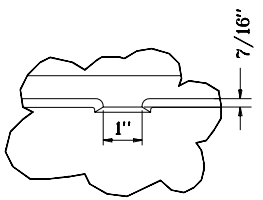

DETAIL A

INDIANA DEPARTMENT OF TRANSPORTATION

CASTING TYPE 15

FRAME

SEPTEMBER 1998

STANDARD DRAWING NO. **E 720-ICCA-16**

ANTHONY L. UREMOVICH REGISTERED No. 18095 STATE OF INDIANA PROFESSIONAL ENGINEER

DESIGN STANDARDS ENGINEER

DETAILS PLACED IN THIS FORMAT	11-15-99
/s/ Anthony L. Uremovich	11-15-99
DESIGN STANDARDS ENGINEER	DATE
/s/ Firooz Zandi	11-15-99
CHIEF HIGHWAY ENGINEER	DATE
ORIGINALLY APPROVED	9-01-98

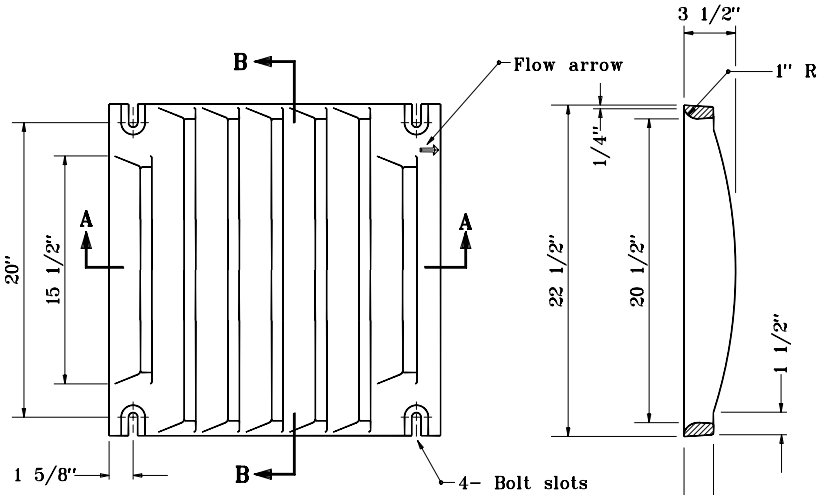

PLAN

SECTION B-B

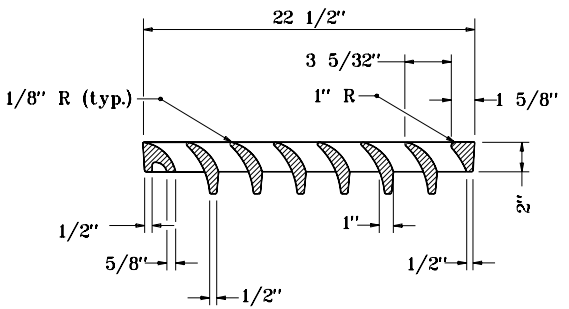

SECTION A-A

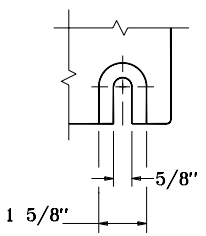

BOLT SLOT DETAIL

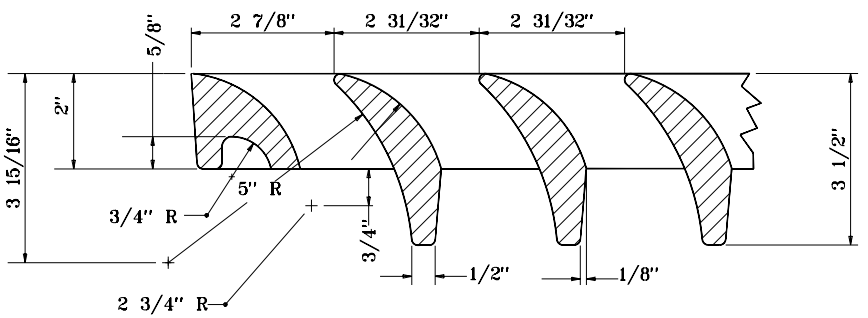

INDIANA DEPARTMENT OF TRANSPORTATION

CASTING TYPE 15 GRATE

SEPTEMBER 1998

STANDARD DRAWING NO. E 720-ICCA-17

ANTHONY L. UREMOVICH REGISTERED No. 18095 STATE OF INDIANA PROFESSIONAL ENGINEER

DESIGN STANDARDS ENGINEER

DETAILS PLACED IN THIS FORMAT 11-15-99

/s/ Anthony L. Uremovich 11-15-99
DESIGN STANDARDS ENGINEER DATE

/s/ Firooz Zandi 11-15-99
CHIEF HIGHWAY ENGINEER DATE

ORIGINALLY APPROVED 9-01-98

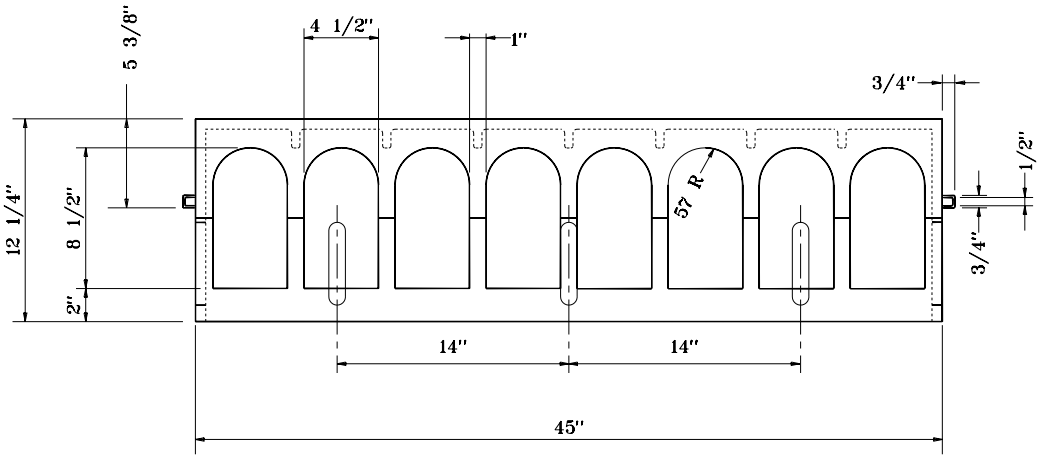

FRONT

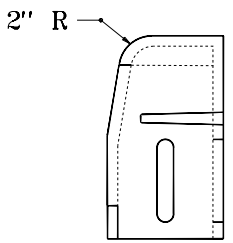

SIDE

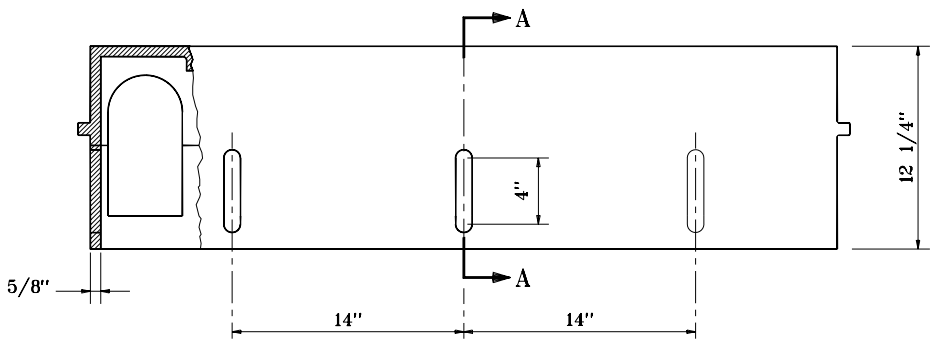

BACK

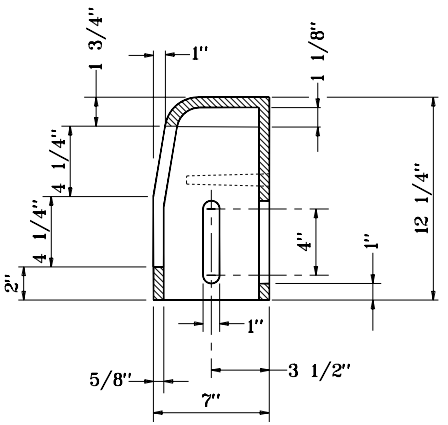

SECTION A-A

INDIANA DEPARTMENT OF TRANSPORTATION

CASTING TYPE 15
CURB BOX

SEPTEMBER 1998

STANDARD DRAWING NO. **E 720-ICCA-18**

ANTHONY L. UREMOVICH REGISTERED No. 18095 STATE OF INDIANA PROFESSIONAL ENGINEER

DESIGN STANDARDS ENGINEER

DETAILS PLACED IN THIS FORMAT	11-15-99
/s/ Anthony L. Uremovich DESIGN STANDARDS ENGINEER	11-15-99 DATE
/s/ Firooz Zandi CHIEF HIGHWAY ENGINEER	11-15-99 DATE
ORIGINALLY APPROVED	9-01-98

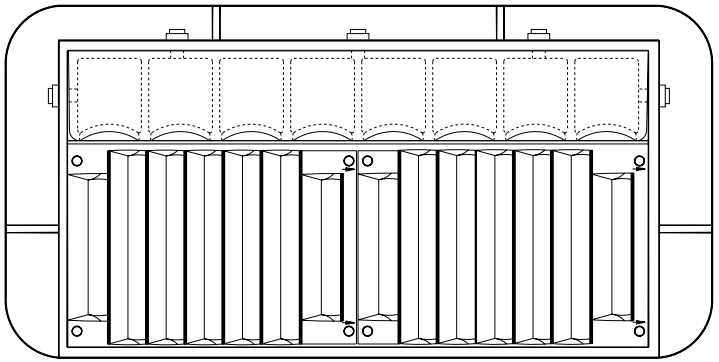

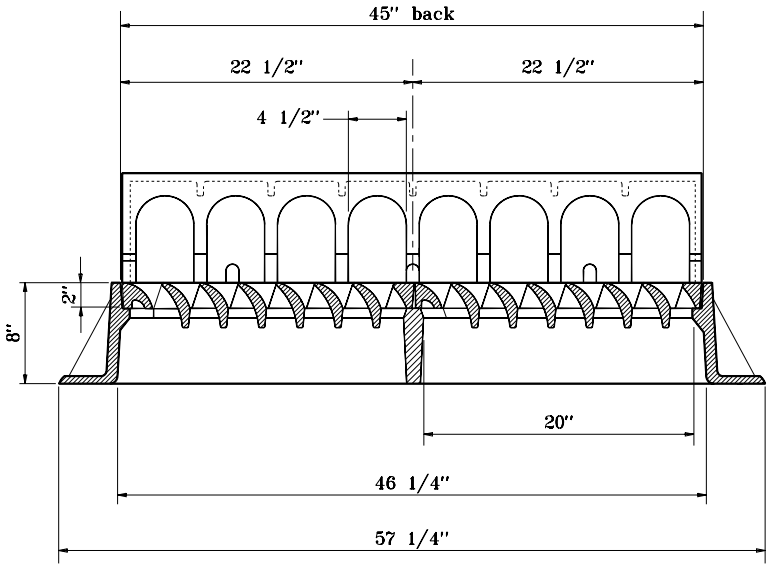

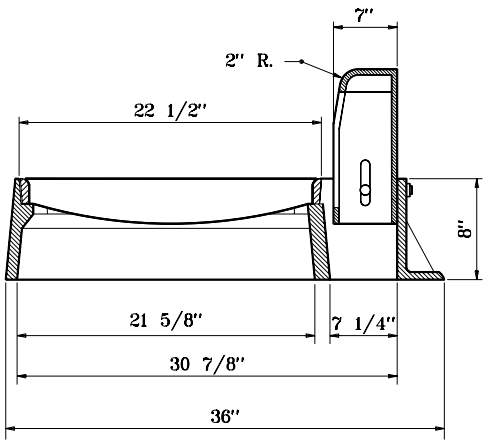

GENERAL NOTES

1. Curb adjustment $5\frac{1}{2}$" to $9\frac{1}{2}$".

INDIANA DEPARTMENT OF TRANSPORTATION

CASTING TYPE 15 (ALTERNATE) FRAME, GRATE, AND CURB BOX

SEPTEMBER 1998

STANDARD DRAWING NO. **E 720-ICCA-19**

ANTHONY L. UREMOVICH REGISTERED No. 18095 STATE OF INDIANA PROFESSIONAL ENGINEER

DESIGN STANDARDS ENGINEER

DETAILS PLACED IN THIS FORMAT	11-15-99
/s/ Anthony L. Uremovich DESIGN STANDARDS ENGINEER	11-15-99 DATE
/s/ Firooz Zandi CHIEF HIGHWAY ENGINEER	11-15-99 DATE
ORIGINALLY APPROVED	9-01-98

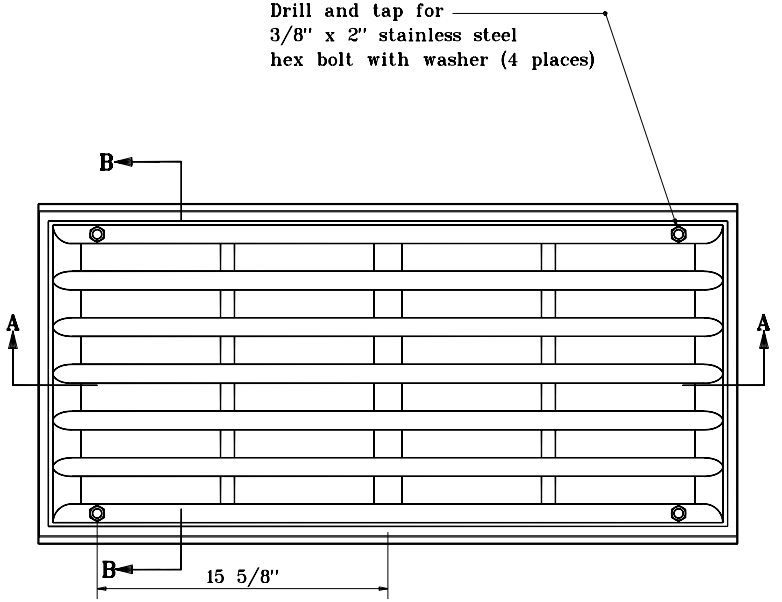

PLAN

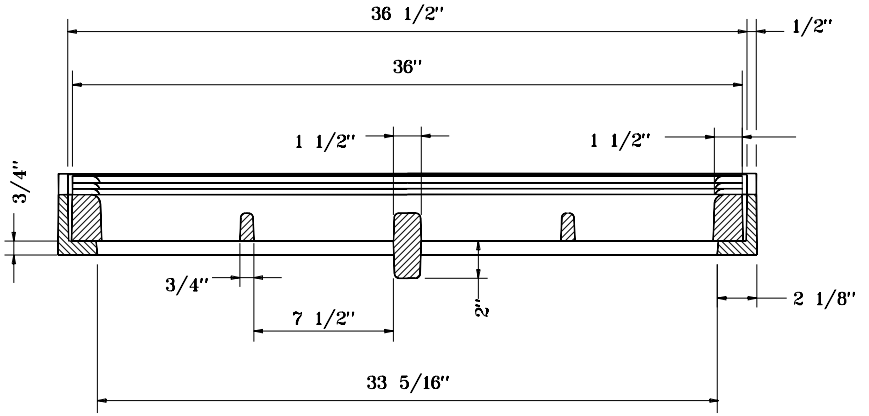

SECTION A–A

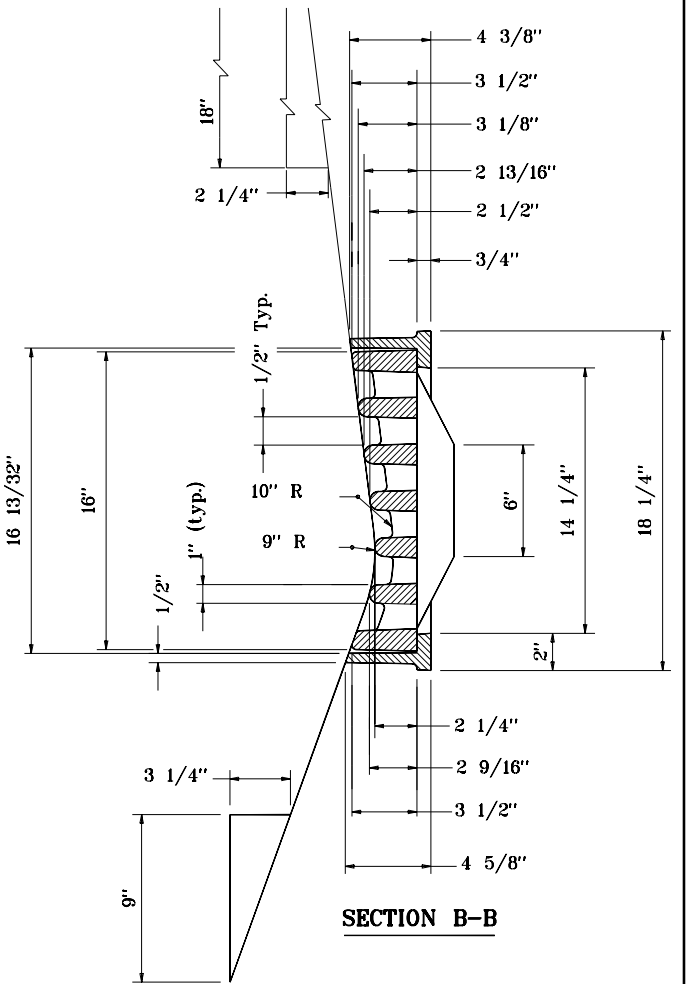

SECTION B–B

INDIANA DEPARTMENT OF TRANSPORTATION

INLET CASTING
TYPE 6

SEPTEMBER 1998

STANDARD DRAWING NO. E 720-INCA-01

ANTHONY L. URENOVICH REGISTERED No. 18095 STATE OF INDIANA PROFESSIONAL ENGINEER

DESIGN STANDARDS ENGINEER

DETAILS PLACED IN THIS FORMAT 11-15-99

/s/ Anthony L. Uremovich 11-15-99
DESIGN STANDARDS ENGINEER DATE

/s/ Firooz Zandi 11-15-99
CHIEF HIGHWAY ENGINEER DATE

ORIGINALLY APPROVED 9-01-98

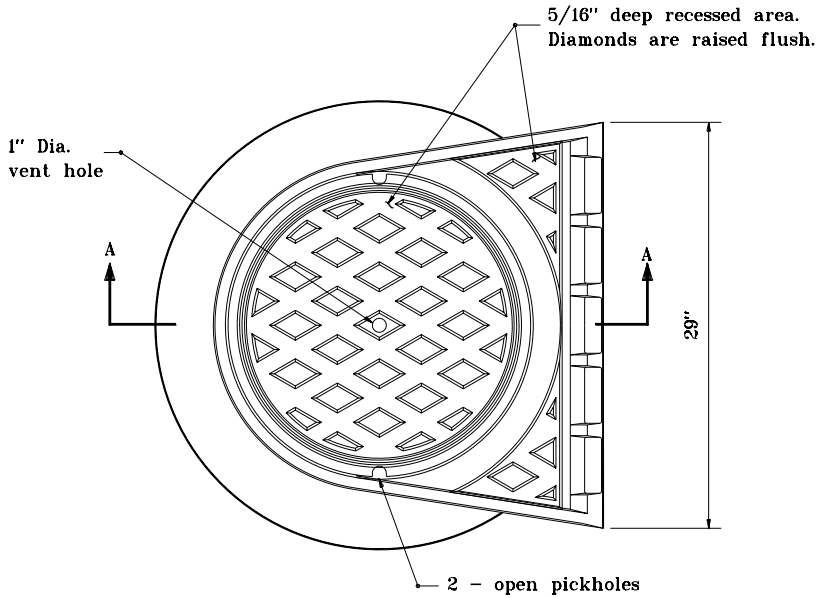

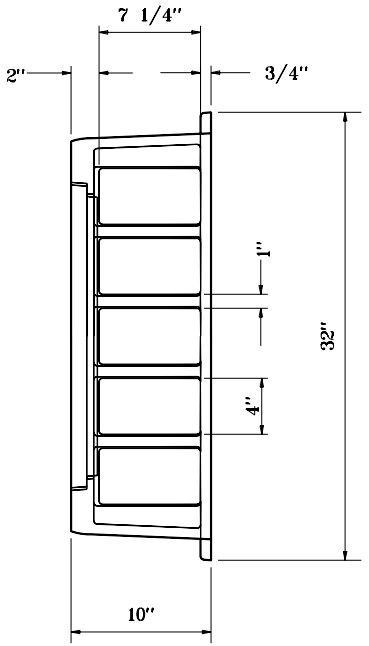

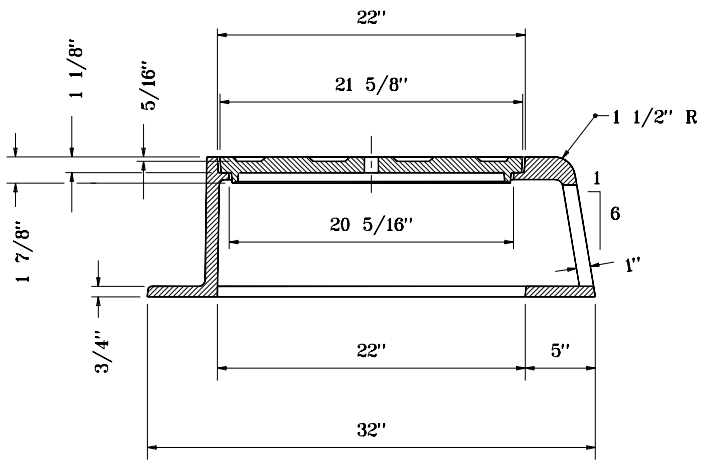

SECTION A-A

CURB CASTING TYPE 3

INDIANA DEPARTMENT OF TRANSPORTATION

CURB INLET CASTING
TYPE 3

SEPTEMBER 1998

STANDARD DRAWING NO. **E 720-INCA-02**

ANTHONY L. UREMOVICH REGISTERED No. 18095 STATE OF INDIANA PROFESSIONAL ENGINEER

DESIGN STANDARDS ENGINEER

DETAILS PLACED IN THIS FORMAT	11-15-99
/s/ Anthony L. Uremovich DESIGN STANDARDS ENGINEER	11-15-99 DATE
/s/ Firooz Zandi CHIEF HIGHWAY ENGINEER	11-15-99 DATE
ORIGINALLY APPROVED	9-01-98

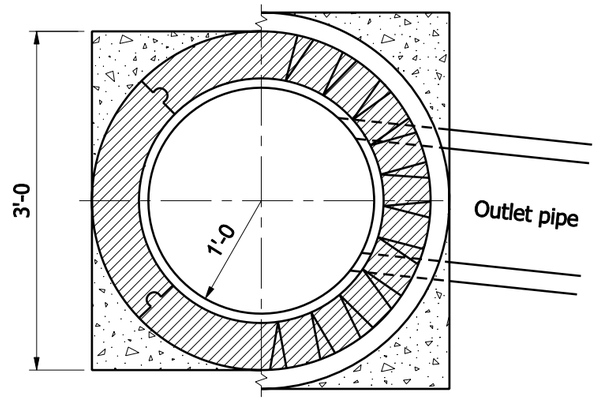

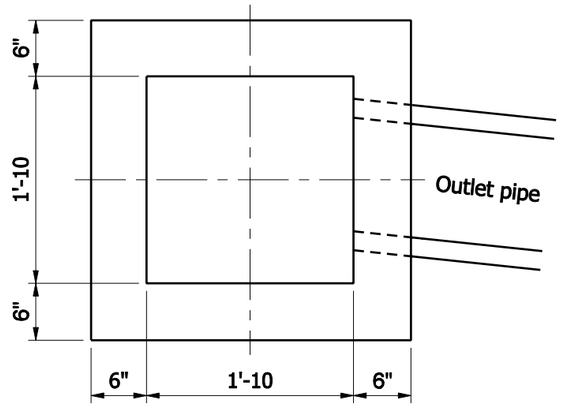

GENERAL NOTES

1. Brick, block, or concrete may be used.
2. T = 8" for brick structure
   T = 6" for segmental block structure
3. In special cases or where inlet pipe is required, A_1, B_1, A_2, and B_2 shall be increased or decreased 1'-0, as directed.
4. 2" dia. pipe drain from bottom of curb to inlet. Aggregate to be placed around inlet end of pipe.
5. 3" dia. pipe to be kept open for drainage of subgrade or base until surface is placed.

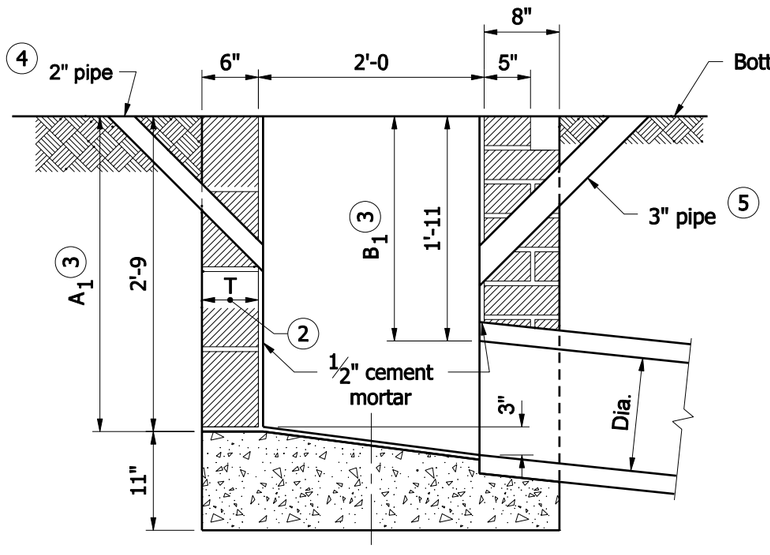

BRICK OR BLOCK

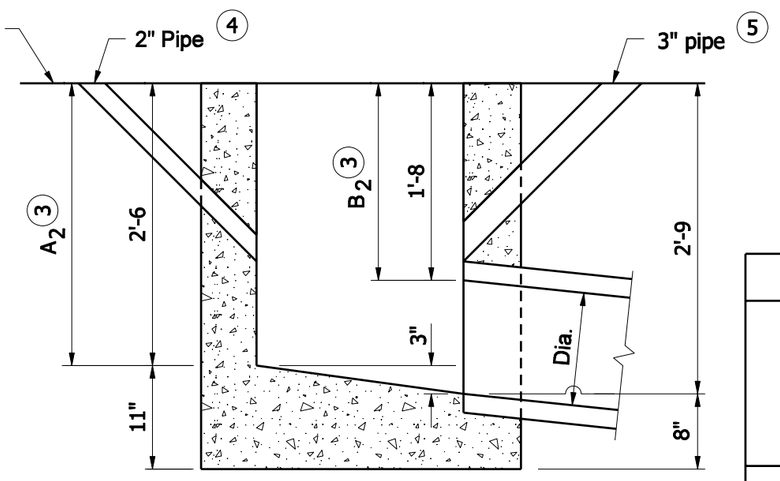

CONCRETE

INDIANA DEPARTMENT OF TRANSPORTATION

INLET TYPE A

SEPTEMBER 2008

STANDARD DRAWING NO. E 720- INST-01

RICHARD L. VanCLEAVE REGISTERED No. 9750 STATE OF INDIANA PROFESSIONAL ENGINEER

DESIGN STANDARDS ENGINEER

/s/ Richard L. VanCleave 09/02/08
DESIGN STANDARDS ENGINEER DATE

/s/ Mark A. Miller 09/02/08
CHIEF HIGHWAY ENGINEER DATE

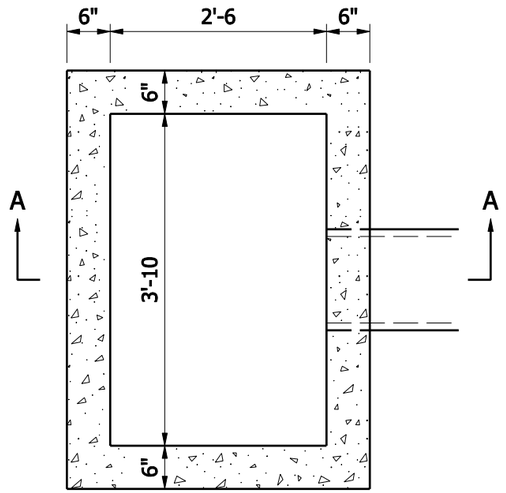

PLAN

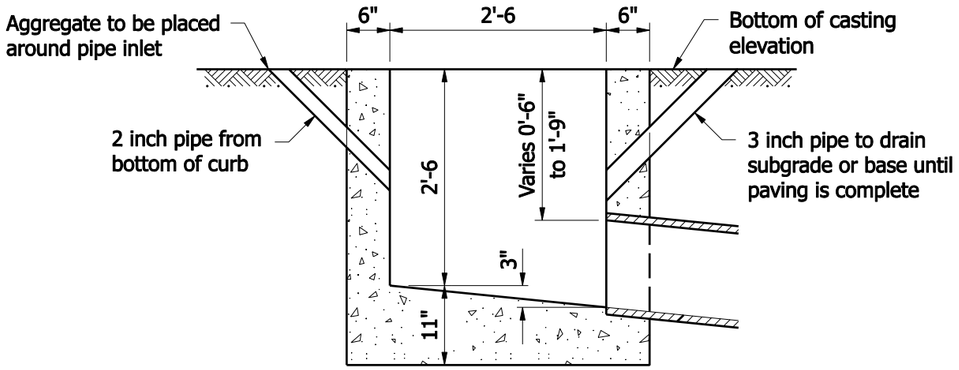

SECTION A-A

INLET-TYPE B

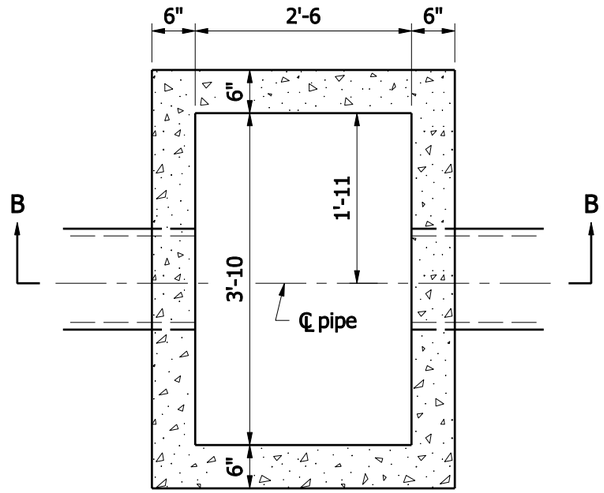

PLAN

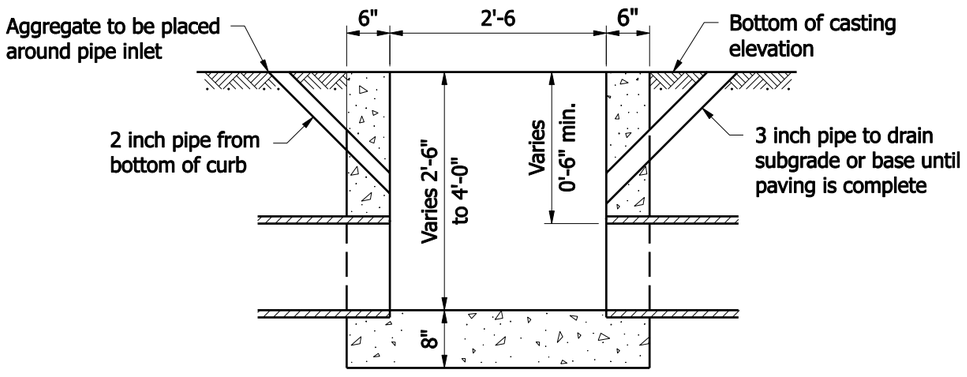

SECTION B-B

INLET-TYPE C

INDIANA DEPARTMENT OF TRANSPORTATION

INLET TYPE B AND C

SEPTEMBER 2008

STANDARD DRAWING NO. E 720- INST-02

RICHARD L. VanCLEAVE REGISTERED No. 9750 STATE OF INDIANA PROFESSIONAL ENGINEER

DESIGN STANDARDS ENGINEER

/s/ Richard L. VanCleave 09/02/08

DESIGN STANDARDS ENGINEER — DATE

/s/ Mark A. Miller 09/02/08

CHIEF HIGHWAY ENGINEER — DATE

GENERAL NOTES

(1) If inlet pipe is required, this dimension shall be increased or decreased 1'–0 as directed.

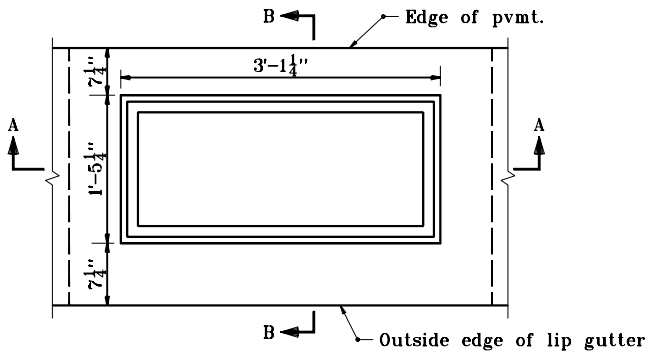

PLAN

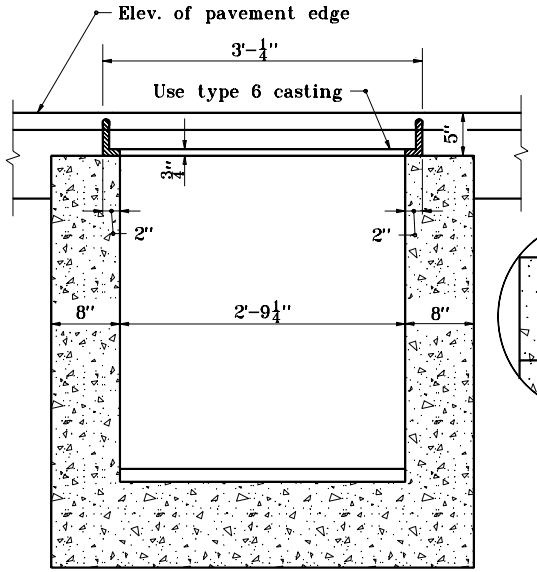

SECTION A–A

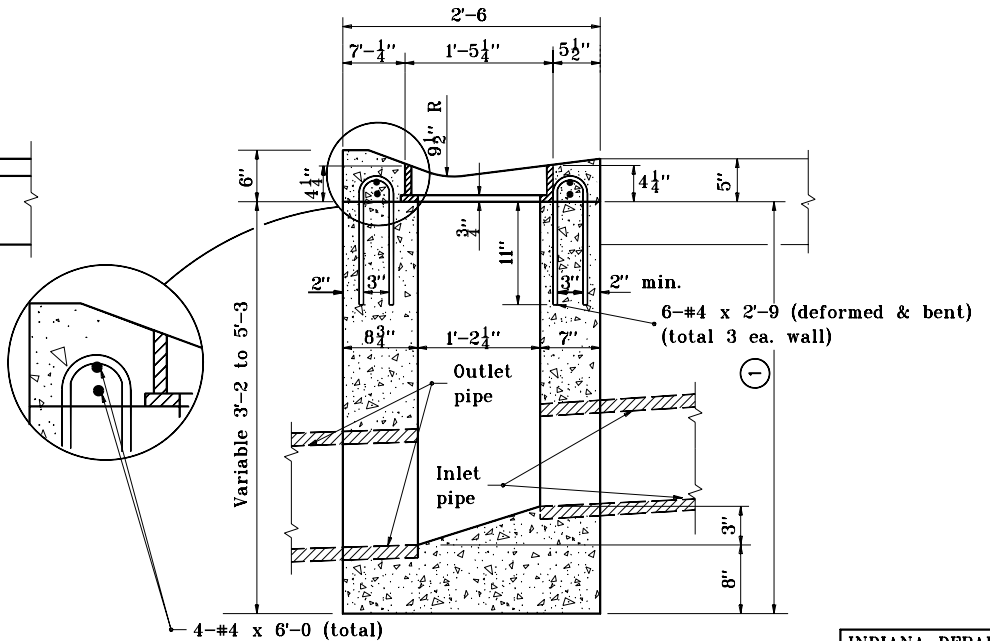

SECTION B–B

INDIANA DEPARTMENT OF TRANSPORTATION

INLET TYPE D

SEPTEMBER 1997

STANDARD DRAWING NO. E 720–INST–03

ANTHONY L. UREMOVICH REGISTERED No. 18095 STATE OF INDIANA PROFESSIONAL ENGINEER

DESIGN STANDARDS ENGINEER

DETAILS PLACED IN THIS FORMAT	11-15-99
/s/ Anthony L. Uremovich DESIGN STANDARDS ENGINEER	11-15-99 DATE
/s/ Firooz Zandi CHIEF HIGHWAY ENGINEER	11-15-99 DATE
ORIGINALLY APPROVED	9-01-97

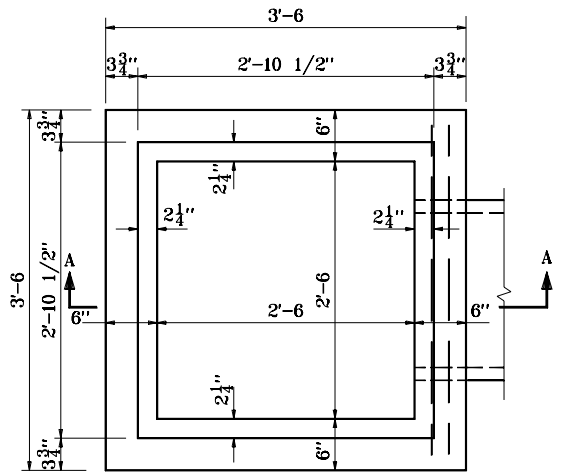

PLAN

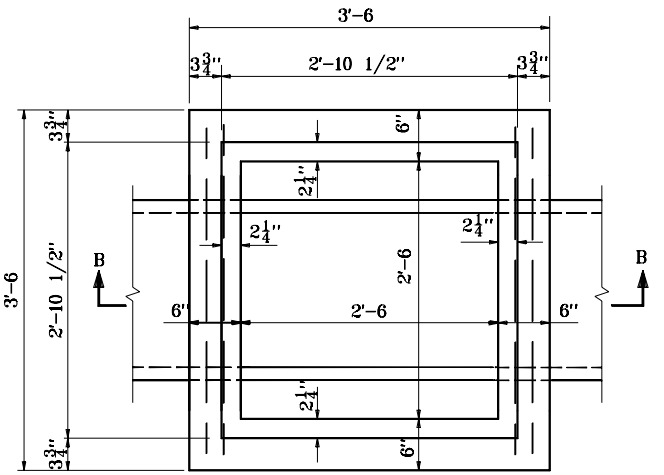

PLAN

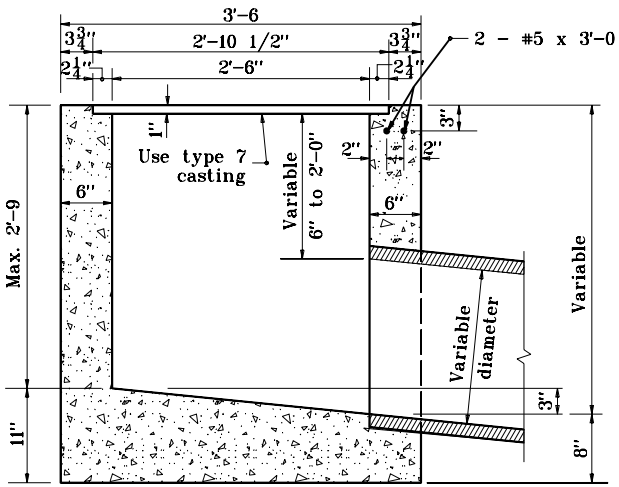

SECTION A-A

INLET TYPE E (CONC.)

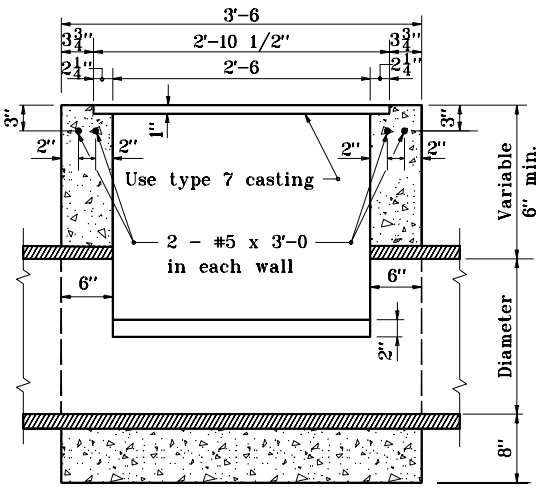

SECTION B-B

INLET TYPE F (CONC.)

INDIANA DEPARTMENT OF TRANSPORTATION

INLETS TYPE E AND F

SEPTEMBER 1997

STANDARD DRAWING NO. **E 720-INST-04**

ANTHONY L. UREMOVICH REGISTERED No. 18095 STATE OF INDIANA PROFESSIONAL ENGINEER

DESIGN STANDARDS ENGINEER

DETAILS PLACED IN THIS FORMAT 11-15-99

/s/ Anthony L. Uremovich 11-15-99
DESIGN STANDARDS ENGINEER DATE

/s/ Firooz Zandi 11-15-99
CHIEF HIGHWAY ENGINEER DATE

ORIGINALLY APPROVED 9-02-97

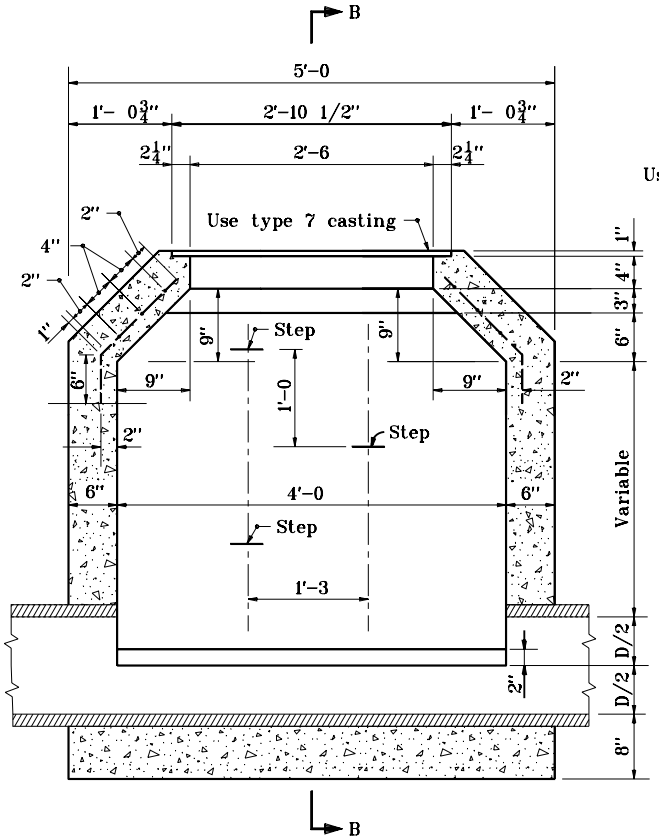

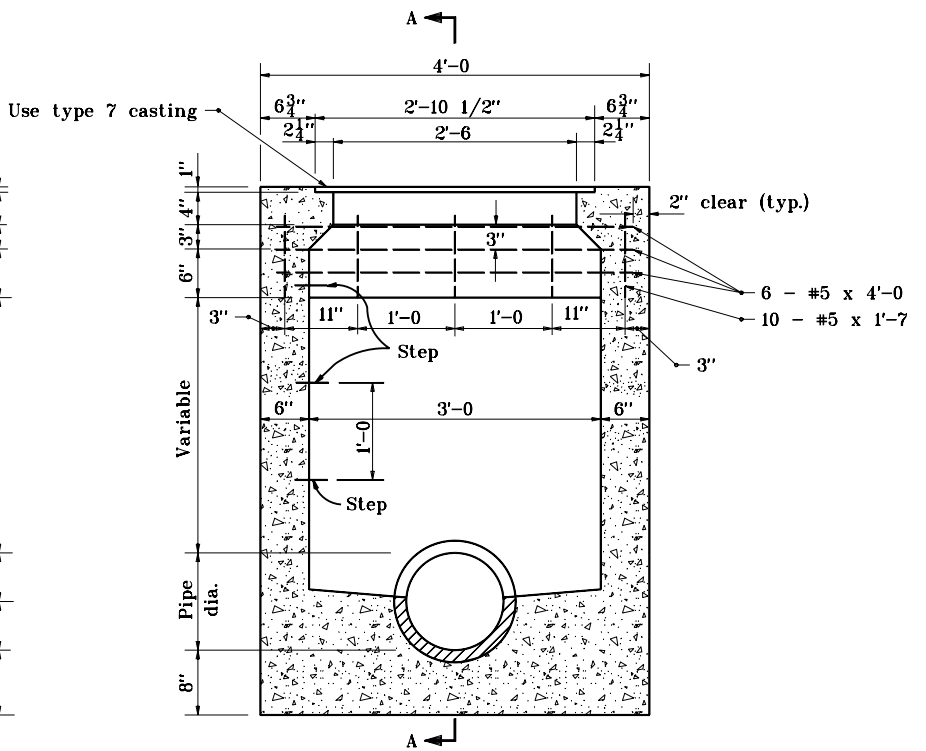

INDIANA DEPARTMENT OF TRANSPORTATION

INLET TYPE G

SEPTEMBER 1997

STANDARD DRAWING NO. E 720-INST-05

ANTHONY L. UREMOVICH REGISTERED No. 18095 STATE OF INDIANA PROFESSIONAL ENGINEER

DESIGN STANDARDS ENGINEER

DETAILS PLACED IN THIS FORMAT 11-15-99

/s/ Anthony L. Uremovich 11-15-99
DESIGN STANDARDS ENGINEER DATE

/s/ Firooz Zandi 11-15-99
CHIEF HIGHWAY ENGINEER DATE

ORIGINALLY APPROVED 9-01-97

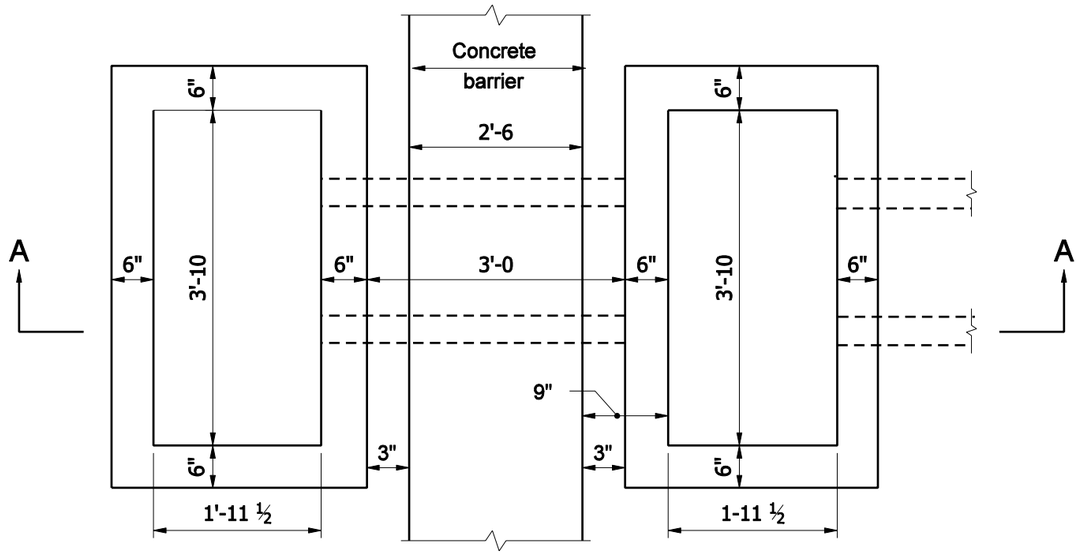

PLAN

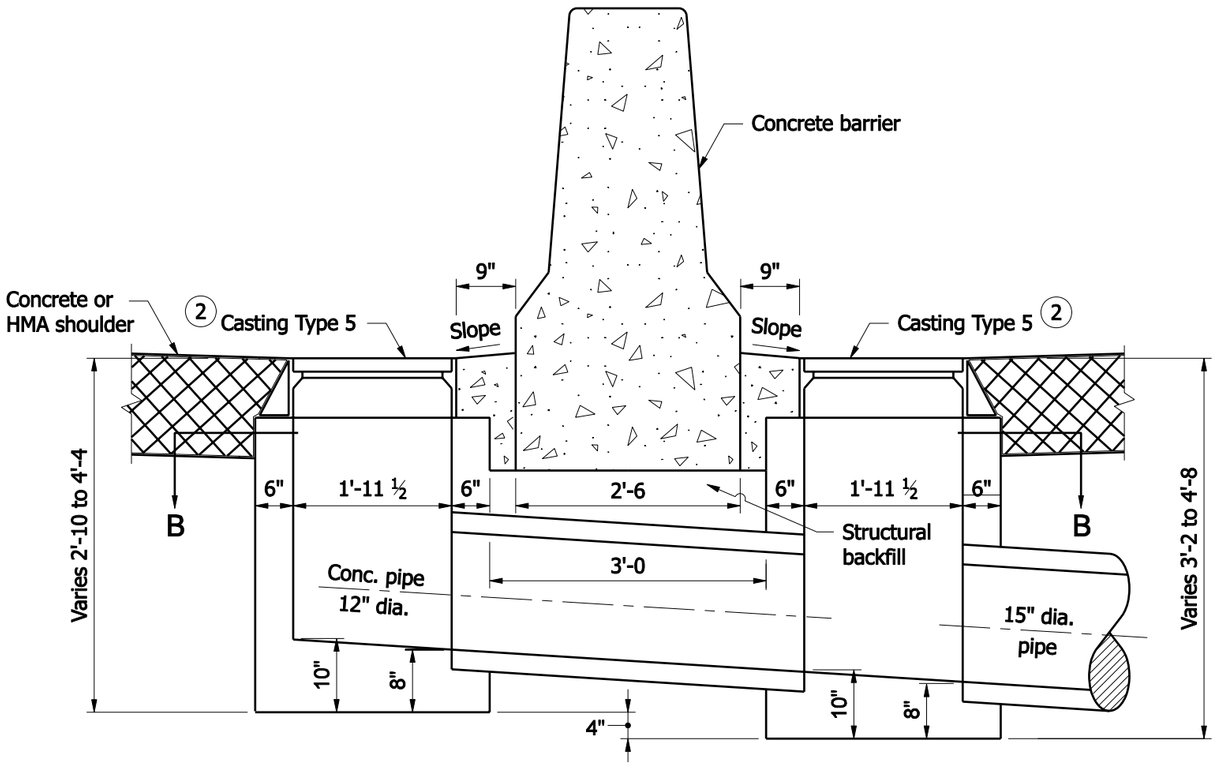

SECTION A-A

NOTES

1. Each inlet Type H includes two boxes and the connector pipe between the inlet boxes.
2. See Standard Drawing E 720-ICCA-01 thru -03 for casting type 5 details.

INDIANA DEPARTMENT OF TRANSPORTATION

INLET TYPE H

SEPTEMBER 2008

STANDARD DRAWING NO. E 720- INST-05A

RICHARD L. VanCLEAVE REGISTERED No. 9750 STATE OF INDIANA PROFESSIONAL ENGINEER

DESIGN STANDARDS ENGINEER

/s/ Richard L. VanCleave 09/02/08
DESIGN STANDARDS ENGINEER DATE

/s/ Mark A. Miller 09/02/08
CHIEF HIGHWAY ENGINEER DATE

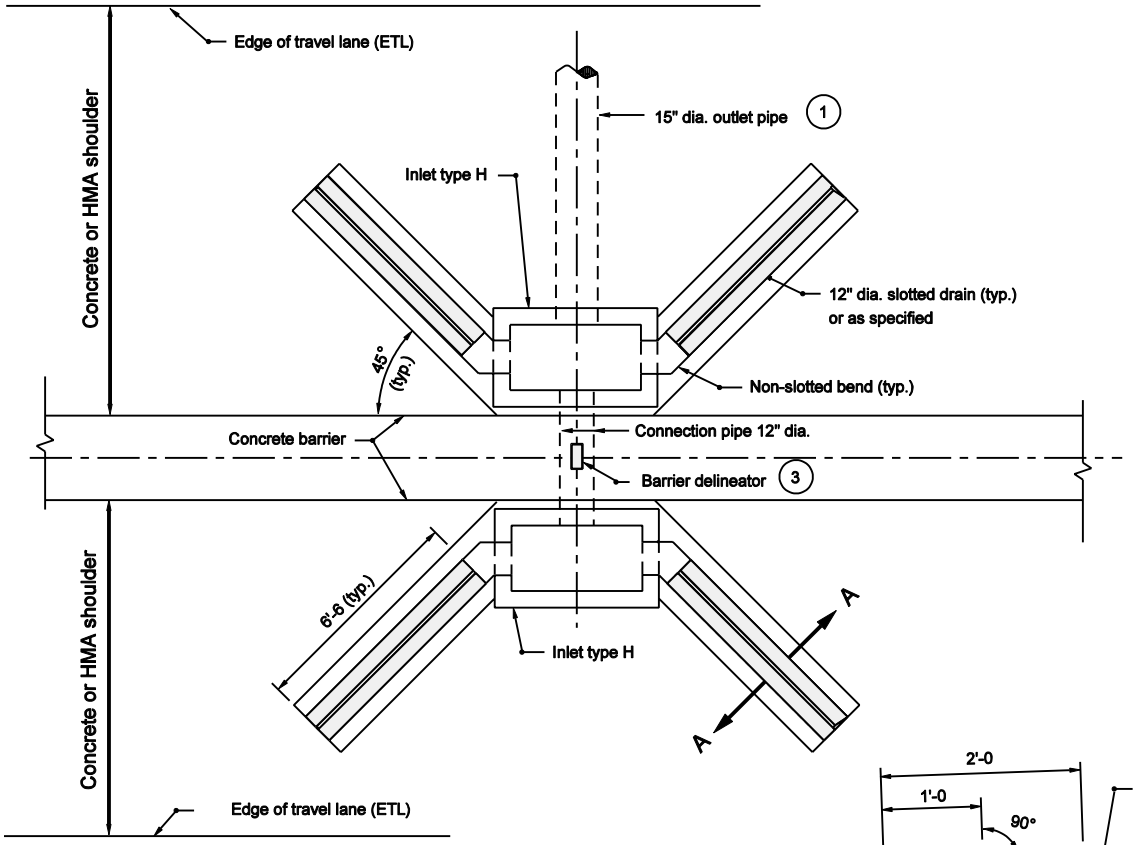

PLAN VIEW

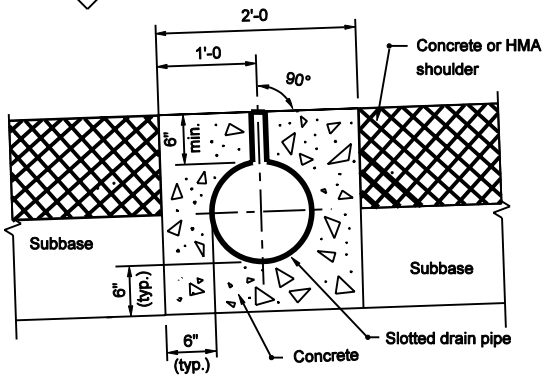

SECTION A-A

NOTES :

1. Inlet and outlet pipe orientation to meet site conditions.
2. See Standard Drawing E 720-INST-05A for inlet Type H placement and details.
3. Barrier delineators provided to indicate the location of the inlets and shall be centered on top of concrete barrier at the inlets.

INDIANA DEPARTMENT OF TRANSPORTATION

INLET TYPE H WITH SLOTTED DRAIN PIPE

MARCH 2003

STANDARD DRAWING NO. E 720-INST-05B

RICHARD L. VanCLEAVE REGISTERED No. 9750 STATE OF INDIANA PROFESSIONAL ENGINEER

DESIGN STANDARDS ENGINEER

/s/ Richard L. VanCleave 3-03-03
DESIGN STANDARDS ENGINEER DATE

/s/ Richard K. Smutzer 3-03-03
CHIEF HIGHWAY ENGINEER DATE

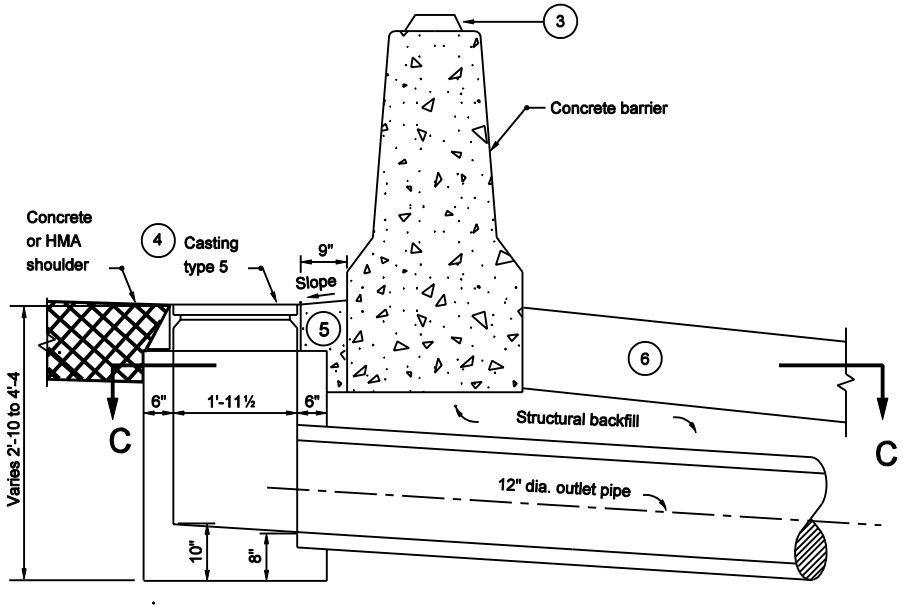

SECTION B-B

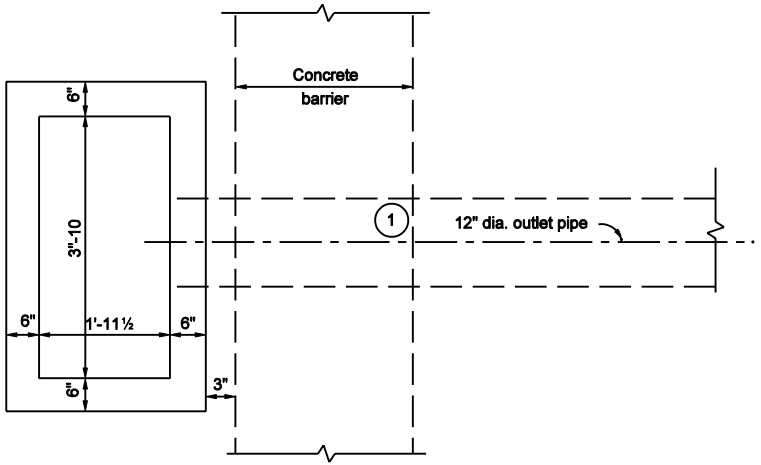

SECTION C-C

NOTES :

1. Outlet pipe orientation to meet site conditions.
2. See Standard Drawing E 720-INST-05D for Type HA inlet with slotted drain pipe placement.
3. All barrier delineator assemblies shall be centered on top of concrete barrier at the inlets.
4. See Standard Drawing E 720-ICCA-01 to -03 for casting type 5 details.
5. Concrete shoulder or pavement between type 5 casting and concrete barrier wall.
6. Concrete, HMA or earth shoulder as appropriate at site.

INDIANA DEPARTMENT OF TRANSPORTATION

INLET TYPE HA
SECTION B-B

MARCH 2003

STANDARD DRAWING NO. E 720-INST-05C

RICHARD L. VanCLEAVE REGISTERED No. 9750 STATE OF INDIANA PROFESSIONAL ENGINEER

DESIGN STANDARDS ENGINEER

/s/ Richard L. VanCleave — 3-03-03
DESIGN STANDARDS ENGINEER — DATE

/s/ Richard K. Smutzer — 3-03-03
CHIEF HIGHWAY ENGINEER — DATE

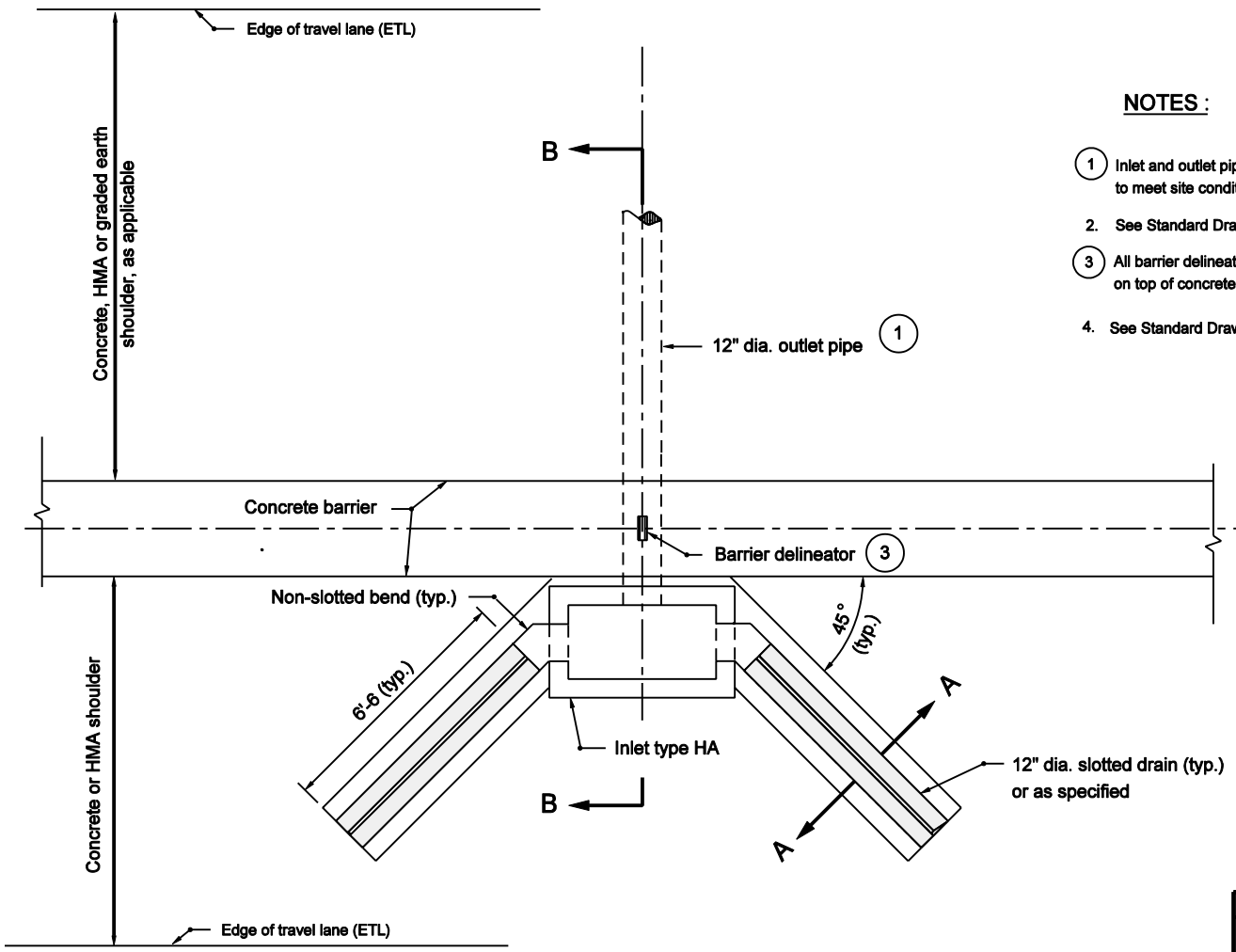

PLAN VIEW

NOTES :

1. Inlet and outlet pipe orientation to meet site conditions.
2. See Standard Drawing E 720-INST-05B for section A-A.
3. All barrier delineator assemblies shall be centered on top of concrete barrier at the inlets.
4. See Standard Drawing E 720-INST-05C for section B-B.

INDIANA DEPARTMENT OF TRANSPORTATION

INLET TYPE HA WITH SLOTTED DRAIN PIPE

MARCH 2003

STANDARD DRAWING NO. E 720-INST-05D

RICHARD L. VANCLEAVE REGISTERED No. 9750 STATE OF INDIANA PROFESSIONAL ENGINEER

DESIGN STANDARDS ENGINEER

/s/ Richard L. VanCleave 3-03-03
DESIGN STANDARDS ENGINEER DATE

/s/ Richard K. Smutzer 3-03-03
CHIEF HIGHWAY ENGINEER DATE

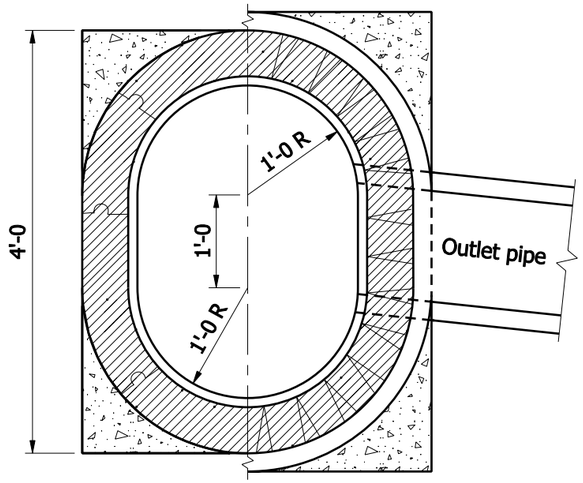

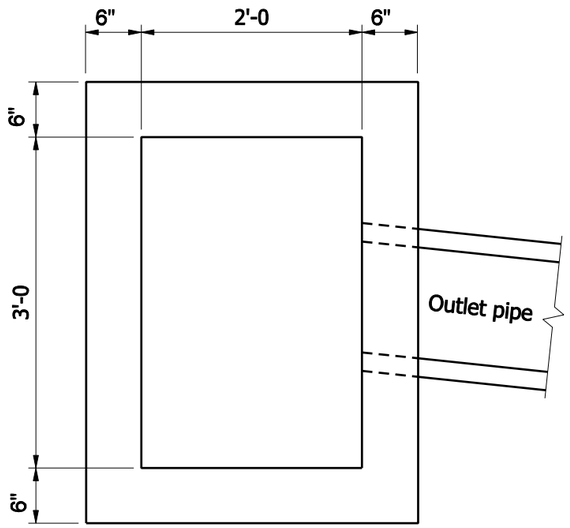

GENERAL NOTES

1. Brick, block, or concrete may be used.
2. T = 8" for brick structure
   T = 6" for segmental block structure
3. In special cases or where inlet pipe is required, A_1, B_1, A_2, and B_2 shall be increased or decreased 1'-0, as directed.
4. 2" dia. pipe drain from bottom of curb to inlet. Aggregate to be placed around inlet end of pipe.
5. 3" dia. pipe to be kept open for drainage of subgrade or base until surface is placed.

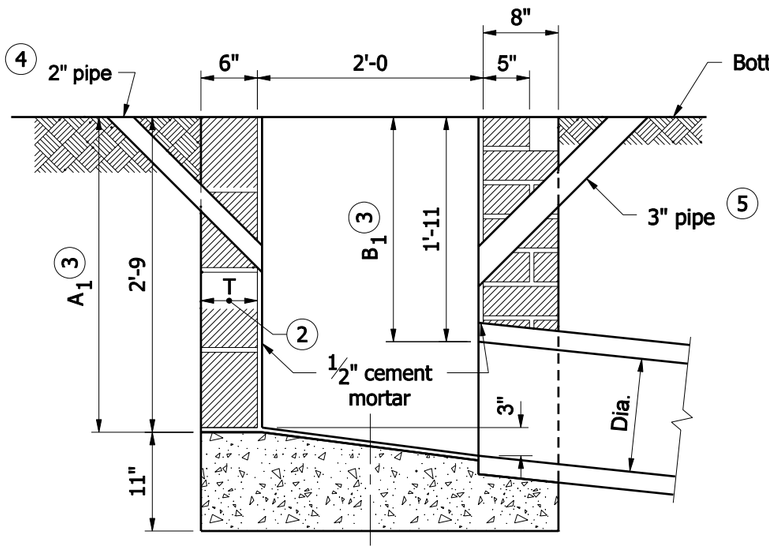

BRICK OR BLOCK

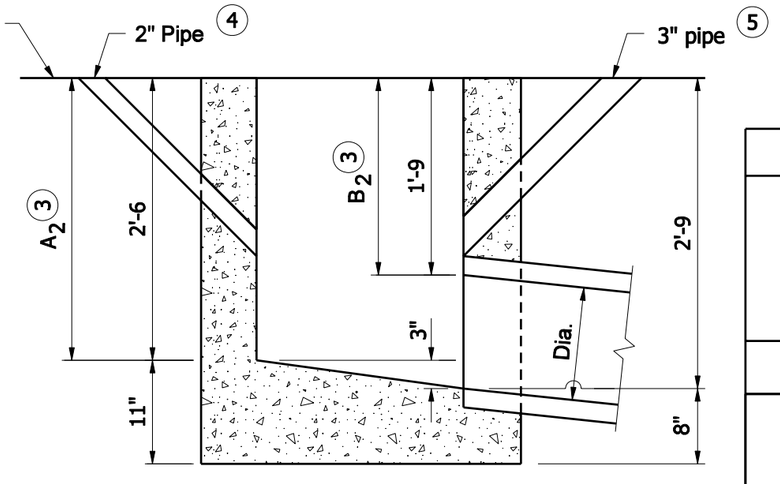

CONCRETE

INDIANA DEPARTMENT OF TRANSPORTATION

INLET TYPE J

SEPTEMBER 2008

STANDARD DRAWING NO. E 720- INST-06

RICHARD L. VanCLEAVE REGISTERED No. 9750 STATE OF INDIANA PROFESSIONAL ENGINEER

DESIGN STANDARDS ENGINEER

/s/ Richard L. VanCleave 09/02/08
DESIGN STANDARDS ENGINEER — DATE

/s/ Mark A. Miller 09/02/08
CHIEF HIGHWAY ENGINEER — DATE

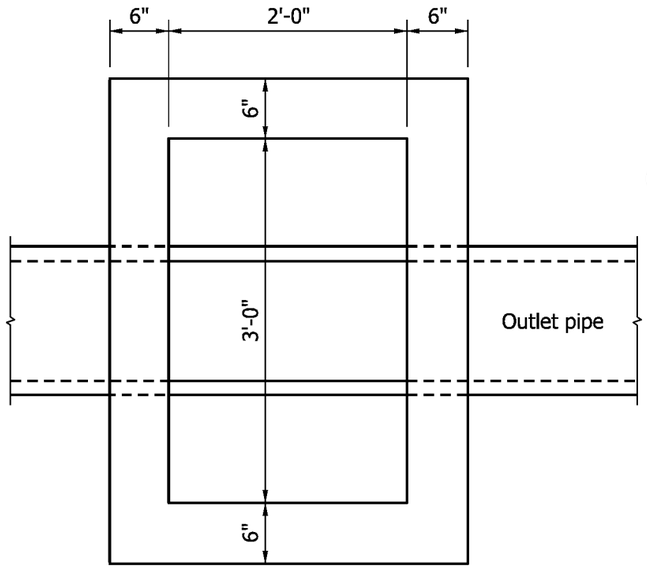

PLAN

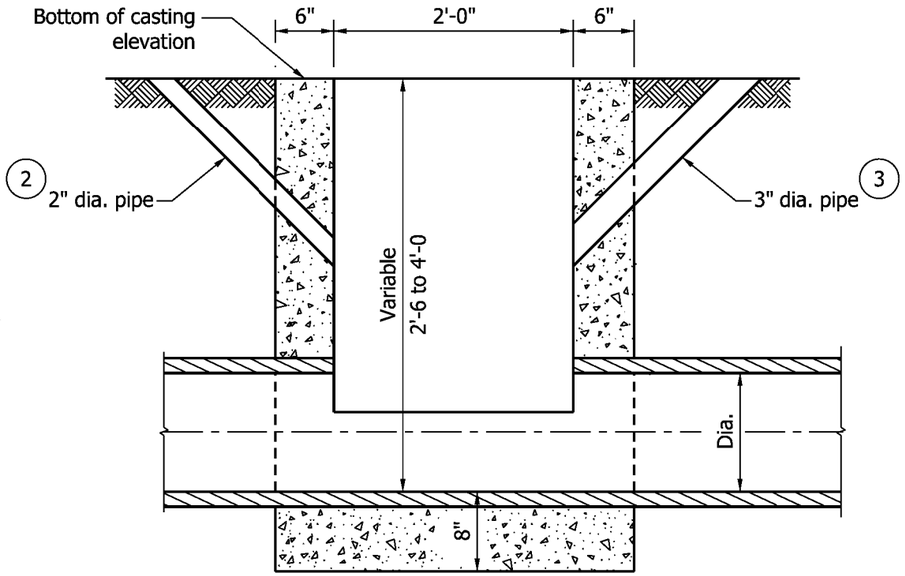

SECTION

INLET TYPE M (CONC)

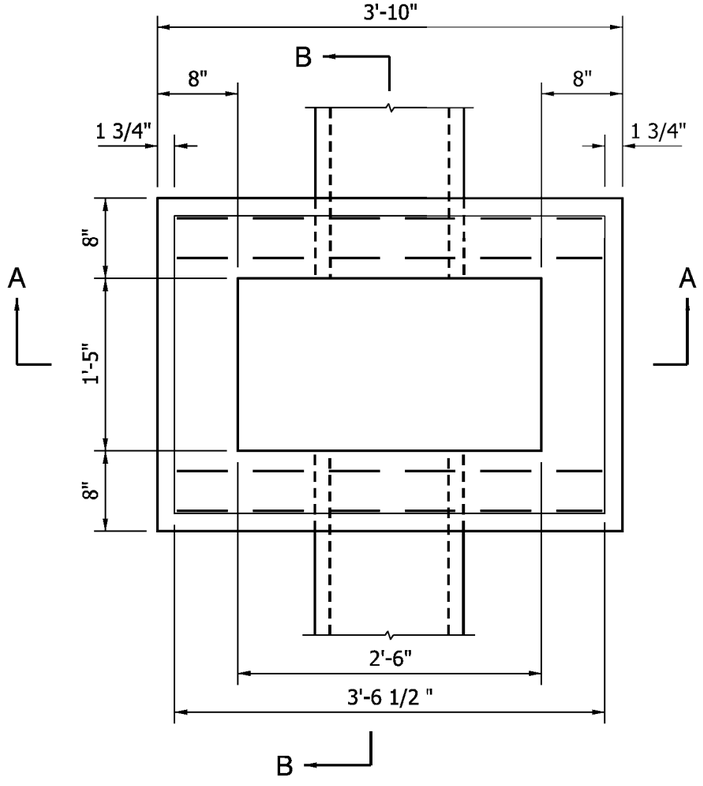

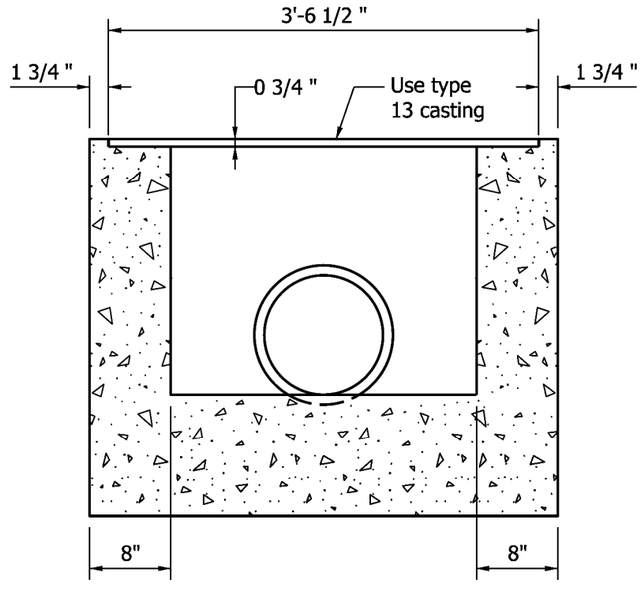

SECTION A-A
INLET TYPE R (Conc.)

GENERAL NOTES

1. If inlet pipe is required, A_1 and B_1 shall be increased or decreased 1'-0 as directed.
2. 2" dia. drain from bottom of curb to inlet. Aggregate to be placed around inlet end of pipe.
3. 3" min. dia. pipe to be kept open for drainage of subgrade or base until surface is placed.

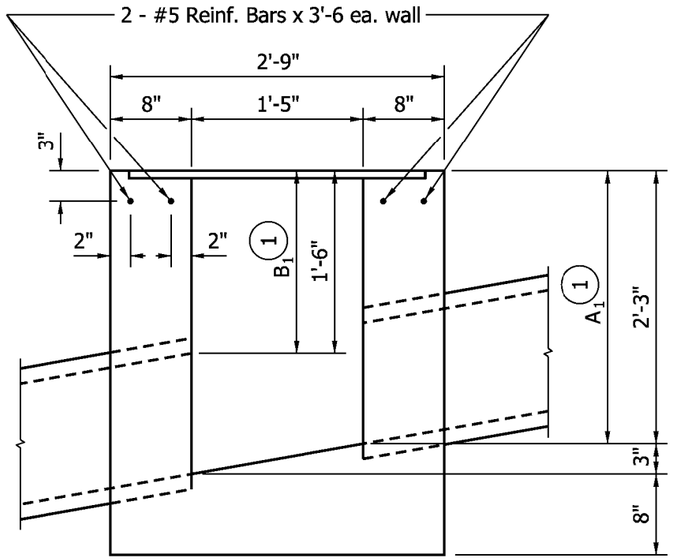

SECTION B-B

INDIANA DEPARTMENT OF TRANSPORTATION

INLET TYPE M & R

SEPTEMBER 2009

STANDARD DRAWING NO. E 720 INST-07

RICHARD L. VanCLEAVE REGISTERED No. 9750 STATE OF INDIANA PROFESSIONAL ENGINEER

DESIGN STANDARDS ENGINEER

/s/ Richard L. VanCleave 09/01/09
DESIGN STANDARDS ENGINEER — DATE

/s/ Mark A. Miller 09/01/09
CHIEF HIGHWAY ENGINEER — DATE

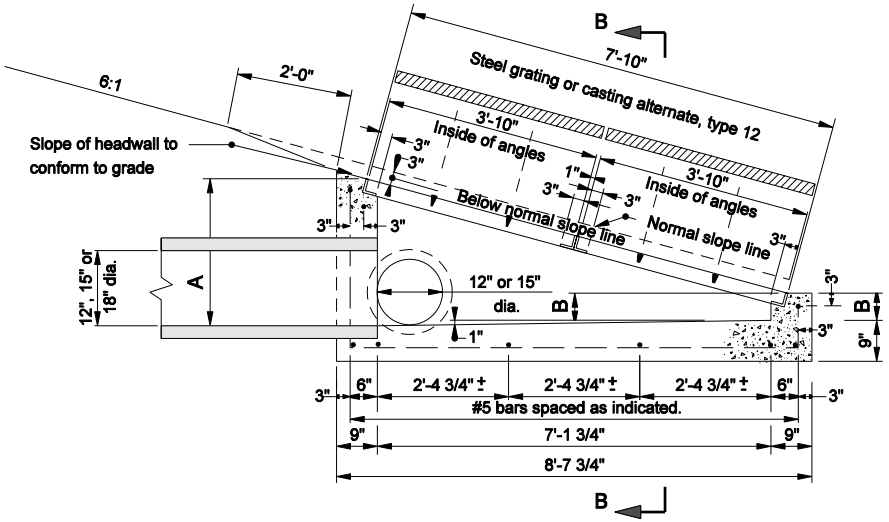

SECTION A-A
Showing Grate Slope of 6:1

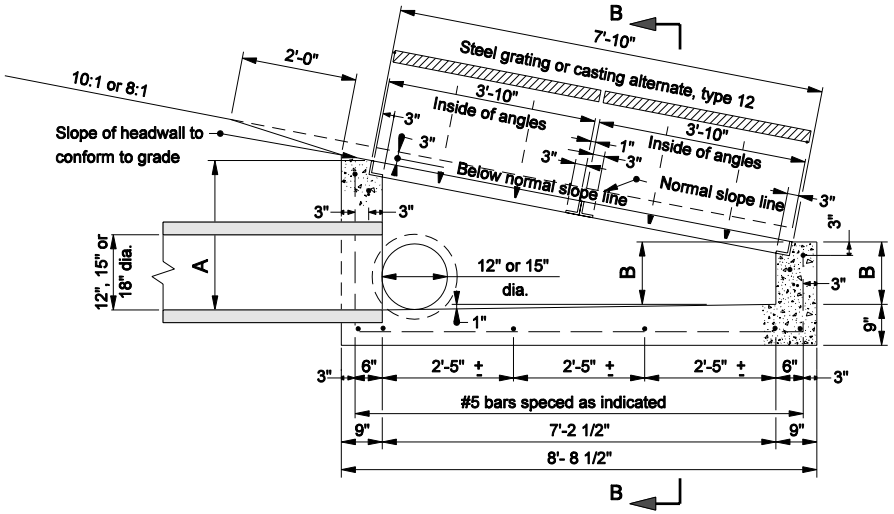

SECTION A-A
Showing Grate Slope of 8:1 or 10:1

TYPE N INLET						
PIPE	6:1		8:1		10:1	
SIZE	A	B	A	B	A	B
12"	21 1/2"	5"	21 1/2"	8 7/8"	21 1/2"	11 1/8"
15"	24 3/4"	8 1/4"	24 3/4"	12 1/8"	24 3/4"	14 3/8"
18"	28"	11 1/2"	28"	15 3/8"	28"	17 5/8"

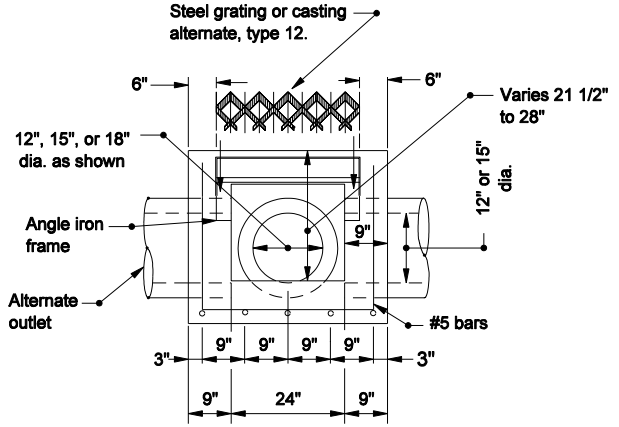

SECTION B-B

INDIANA DEPARTMENT OF TRANSPORTATION

INLET TYPE N

SEPTEMBER 2005

STANDARD DRAWING NO. E 720-INST-08

RICHARD L. VanCLEAVE REGISTERED No. 9750 STATE OF INDIANA PROFESSIONAL ENGINEER

DESIGN STANDARDS ENGINEER

/s/ Richard L. VanCleave 9-01-05
DESIGN STANDARDS ENGINEER DATE

/s/ Richard K. Smutzer 9-01-05
CHIEF HIGHWAY ENGINEER DATE

NOTE:

1. See Standard Drawing E 720-ICCA-10 for steel grating Type 12 or E 720-ICCA-11 for castion Type 12 Alternate.

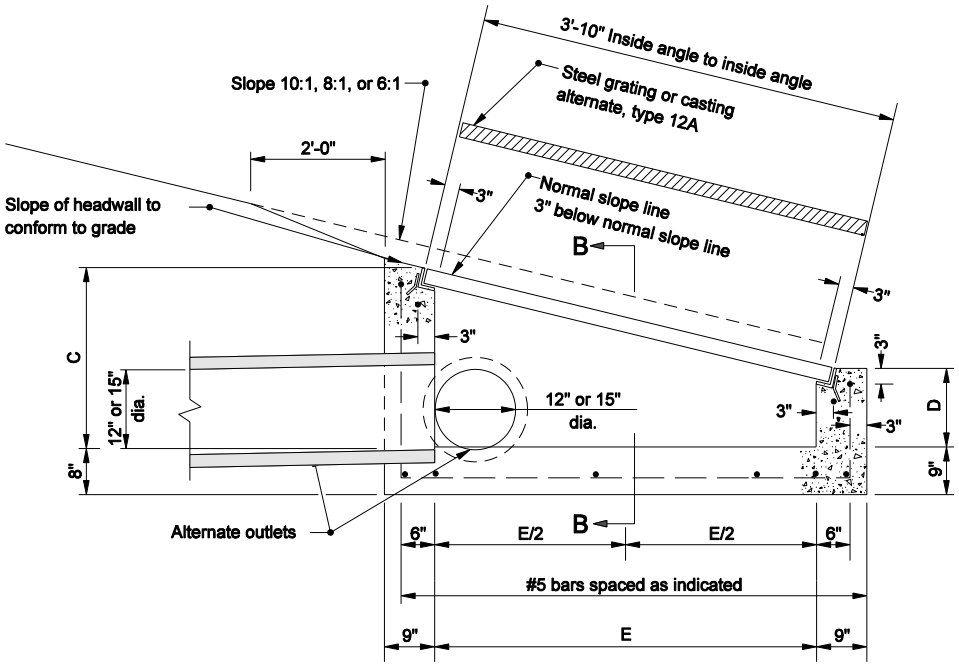

TYPE P INLET

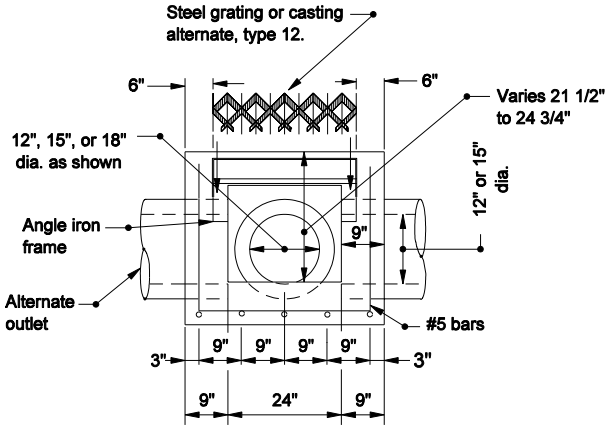

SECTION B-B

TYPE P INLET									
PIPE SIZE	6:1			8:1			10:1		
	C	D	E	C	D	E	C	D	E
12"	21 1/2"	13"	3'-3 1/4"	21 1/2"	14 1/2"	3'-3 3/4"	21 1/2"	15 7/8"	3'-3 3/4"
15"	24 3/4"	16 1/4"	3'-3 1/4"	24 3/4"	18"	3'-3 3/4"	24 3/4"	19 1/8"	3'-3 3/4"

INDIANA DEPARTMENT OF TRANSPORTATION

INLET TYPE P

SEPTEMBER 2005

STANDARD DRAWING NO. E 720-INST-09

RICHARD L. VanCLEAVE REGISTERED No. 9750 STATE OF INDIANA PROFESSIONAL ENGINEER

DESIGN STANDARDS ENGINEER

/s/ Richard L. VanCleave 9-01-05
DESIGN STANDARDS ENGINEER DATE

/s/ Richard K. Smutzer 9-01-05
CHIEF HIGHWAY ENGINEER DATE

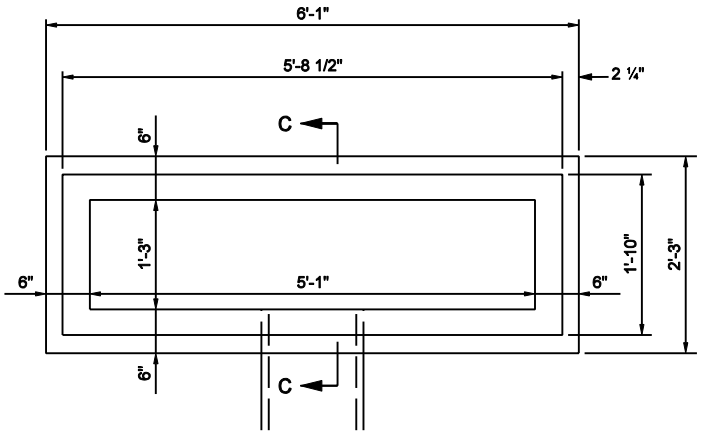

PLAN

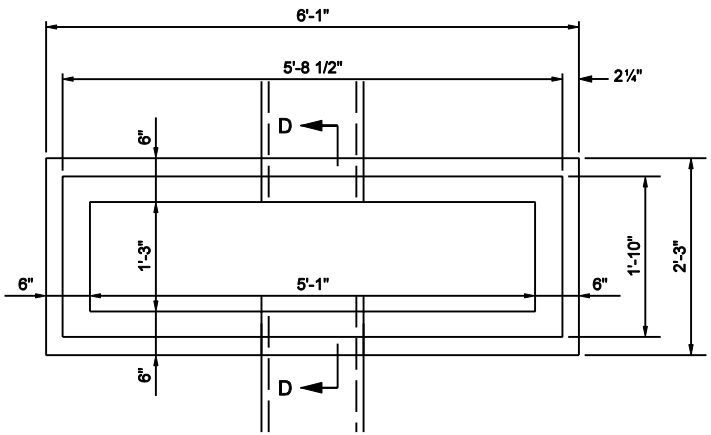

PLAN

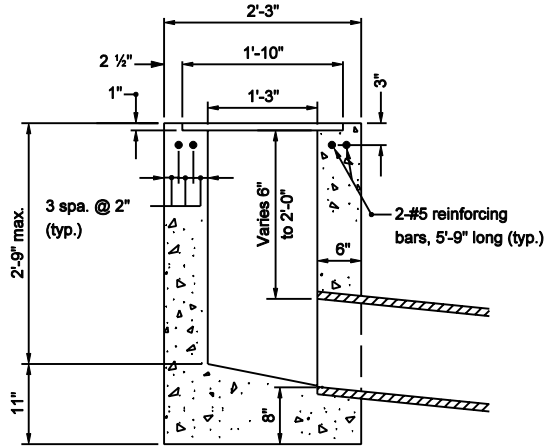

SECTION C-C

TYPE S

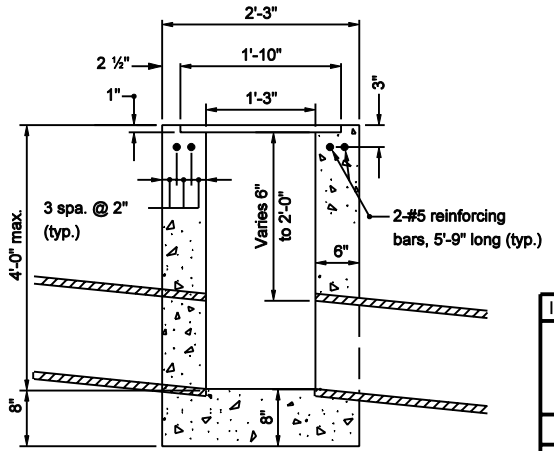

SECTION D-D

TYPE T

INDIANA DEPARTMENT OF TRANSPORTATION

INLETS TYPE S AND T

SEPTEMBER 2003

STANDARD DRAWING NO. E 720-INST-10

RICHARD L. VANCLEAVE REGISTERED No. 9750 STATE OF INDIANA PROFESSIONAL ENGINEER

DESIGN STANDARDS ENGINEER

/s/ Richard L. VanCleave — 9-02-03
DESIGN STANDARDS ENGINEER — DATE

/s/ Richard K. Smutzer — 9-02-03
CHIEF HIGHWAY ENGINEER — DATE

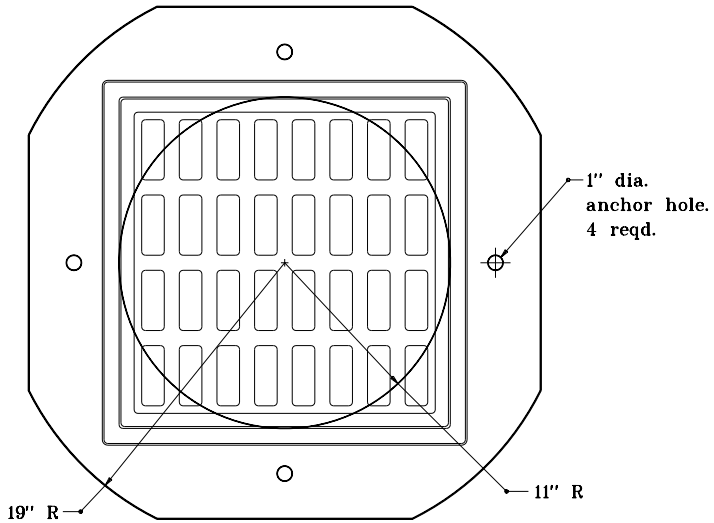

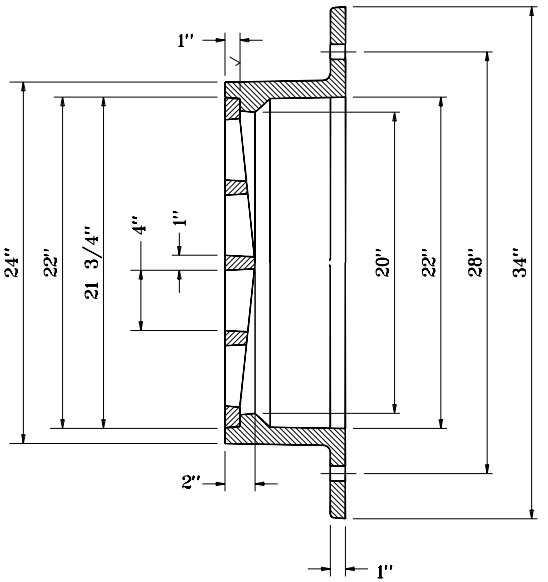

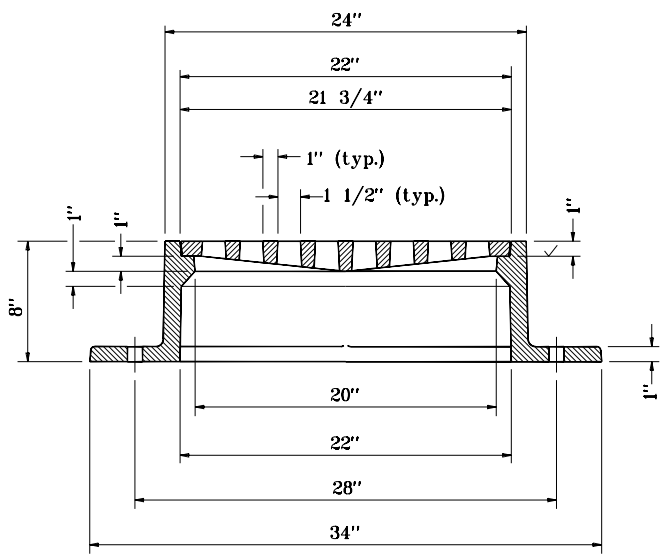

INDIANA DEPARTMENT OF TRANSPORTATION

FLAT TOP GRATE CASTING
TYPE 2

SEPTEMBER 1998

STANDARD DRAWING NO. **E 720-MHCA-01**

ANTHONY L. UREMOVICH REGISTERED No. 18095 STATE OF INDIANA PROFESSIONAL ENGINEER

DESIGN STANDARDS ENGINEER

DETAILS PLACED IN THIS FORMAT 11-15-99

/s/ Anthony L. Uremovich 11-15-99
DESIGN STANDARDS ENGINEER DATE

/s/ Firooz Zandi 11-15-99
CHIEF HIGHWAY ENGINEER DATE

ORIGINALLY APPROVED 9-01-98

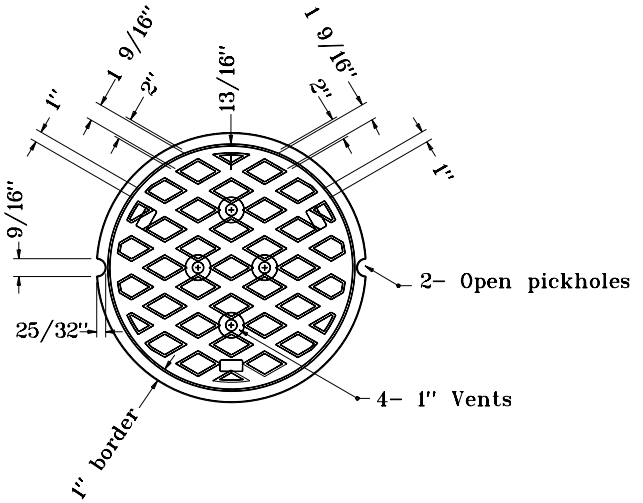

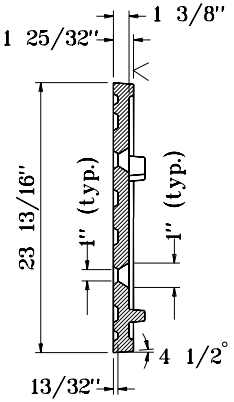

1" dia. anchor bolt holes on a 29 1/8" dia. b.c. 4 reqd.

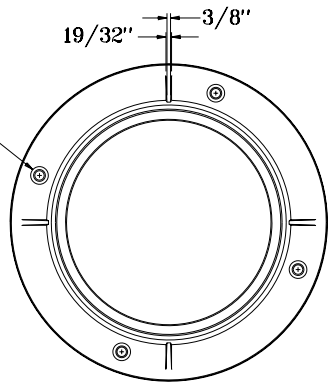

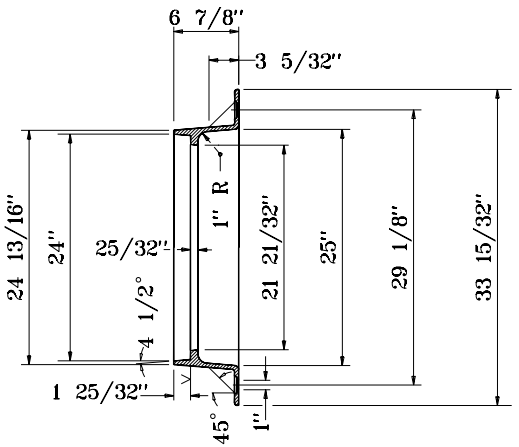

INDIANA DEPARTMENT OF TRANSPORTATION

MANHOLE CASTING
TYPE 4 RING AND COVER

SEPTEMBER 1998

STANDARD DRAWING NO **E 720-MHCA-02**

ANTHONY L. UREMOVICH REGISTERED No. 18095 STATE OF INDIANA PROFESSIONAL ENGINEER

DESIGN STANDARDS ENGINEER

DETAILS PLACED IN THIS FORMAT	11-15-99
/s/ Anthony L. Uremovich	11-15-99
DESIGN STANDARDS ENGINEER	DATE
/s/ Firooz Zandi	11-15-99
CHIEF HIGHWAY ENGINEER	DATE
ORIGINALLY APPROVED	9-01-98

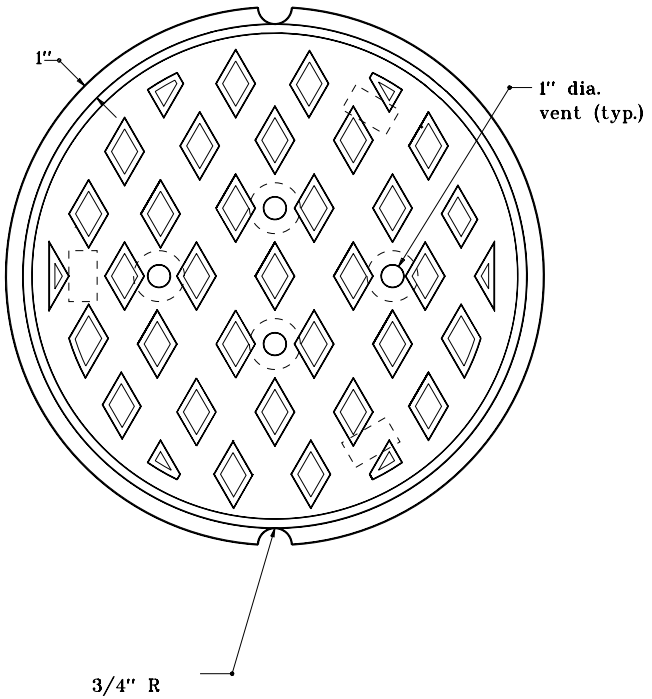

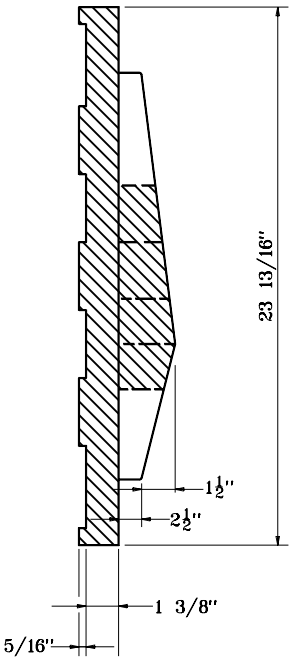

INDIANA DEPARTMENT OF TRANSPORTATION

MANHOLE CASTING TYPE 4 ALTERNATE COVER

SEPTEMBER 1998

STANDARD DRAWING NO. **E 720-MHCA-03**

ANTHONY L. UREMOVICH REGISTERED No. 18095 STATE OF INDIANA PROFESSIONAL ENGINEER

DESIGN STANDARDS ENGINEER

DETAILS PLACED IN THIS FORMAT	11-15-99
/s/ Anthony L. Uremovich	11-15-99
DESIGN STANDARDS ENGINEER	DATE
/s/ Firooz Zandi	11-15-99
CHIEF HIGHWAY ENGINEER	DATE
ORIGINALLY APPROVED	9-01-98

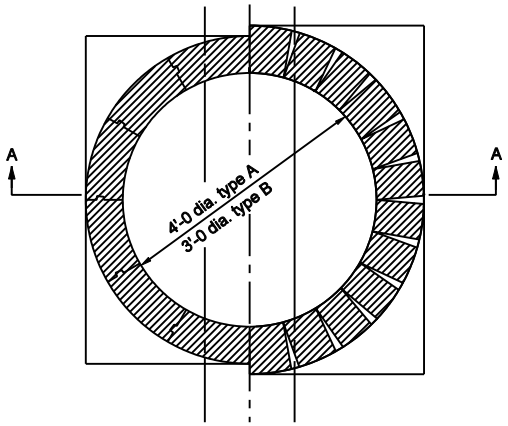

SECTION B-B

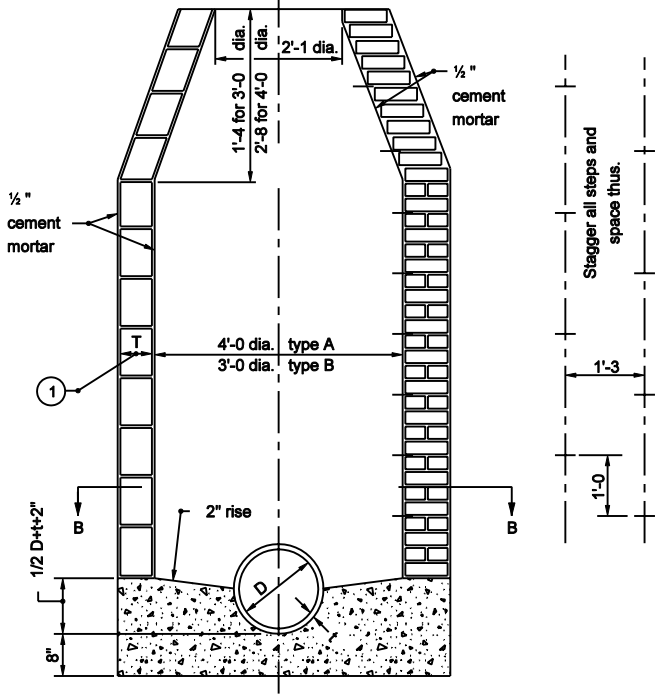

SECTION A-A

TYPE A
Dia. = 4'-0"

TYPE B
Dia. = 3'-0

NOTES

(1) T = 8" for brick structure
T = 6" for segmental block structure

INDIANA DEPARTMENT OF TRANSPORTATION

MANHOLES TYPE A AND B

SEPTEMBER 2003

STANDARD DRAWING NO. E 720-MHST-01

RICHARD L. VanCLEAVE REGISTERED No. 9750 STATE OF INDIANA PROFESSIONAL ENGINEER

DESIGN STANDARDS ENGINEER

/s/ Richard L. VanCleave 9-02-03
DESIGN STANDARDS ENGINEER DATE

/s/ Richard K. Smutzer 9-02-03
CHIEF HIGHWAY ENGINEER DATE

GENERAL NOTES

(1) For eccentric and concentric cone heights see cone heights table on Standard Drawing E 720-MHST-08.

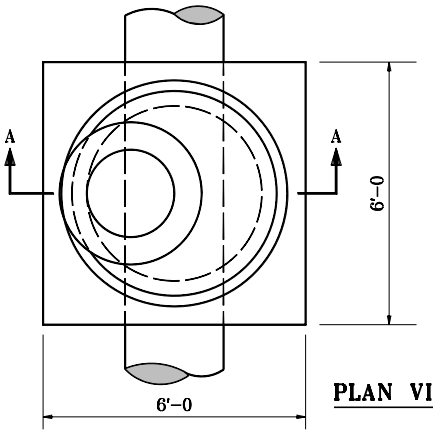

PLAN VIEW

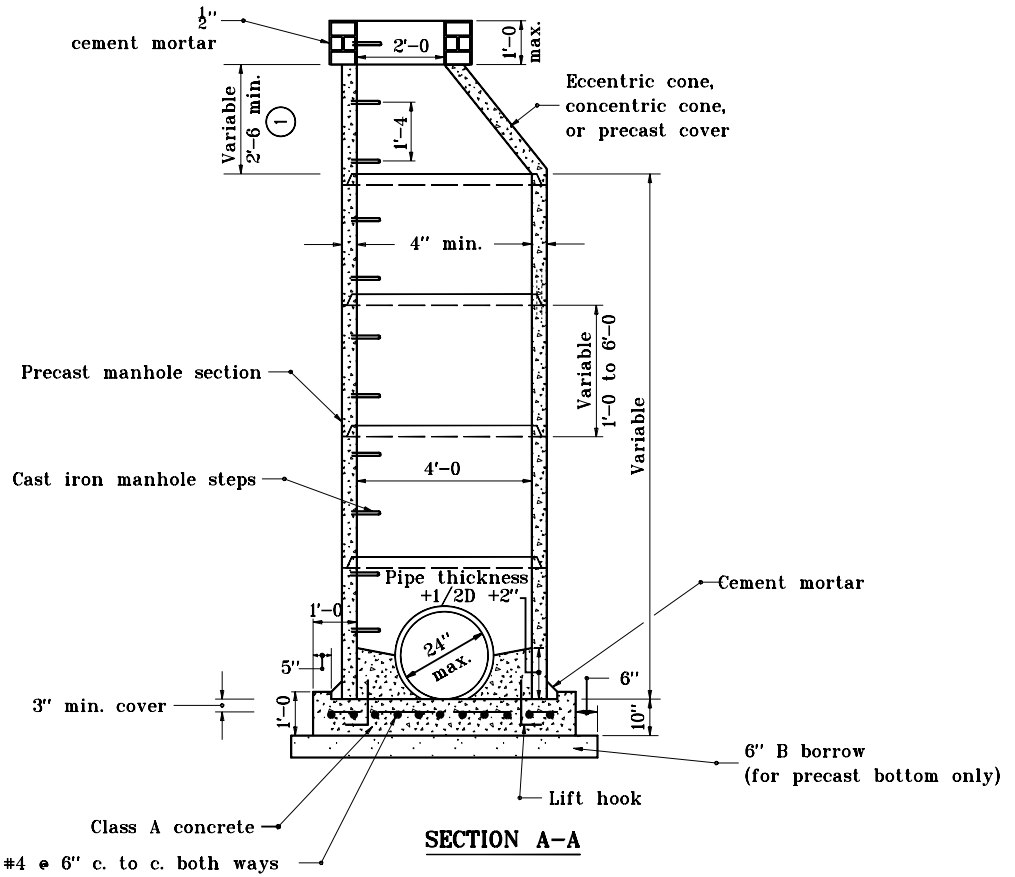

SECTION A-A

INDIANA DEPARTMENT OF TRANSPORTATION

MANHOLE TYPE C

SEPTEMBER 1997

STANDARD DRAWING NO. E 720-MHST-02

ANTHONY L. UREMOVICH REGISTERED No. 18095 STATE OF INDIANA PROFESSIONAL ENGINEER

DESIGN STANDARDS ENGINEER

DETAILS PLACED IN THIS FORMAT	11-15-99
/s/ Anthony L. Uremovich DESIGN STANDARDS ENGINEER	11-15-99 DATE
/s/ Firooz Zandi CHIEF HIGHWAY ENGINEER	11-15-99 DATE
ORIGINALLY APPROVED	9-02-97

NOTES

1. Drop pipe may be used with manhole type D, E, F, or G. Such manhole shall be referred to as drop manhole type D, E, F, or G.

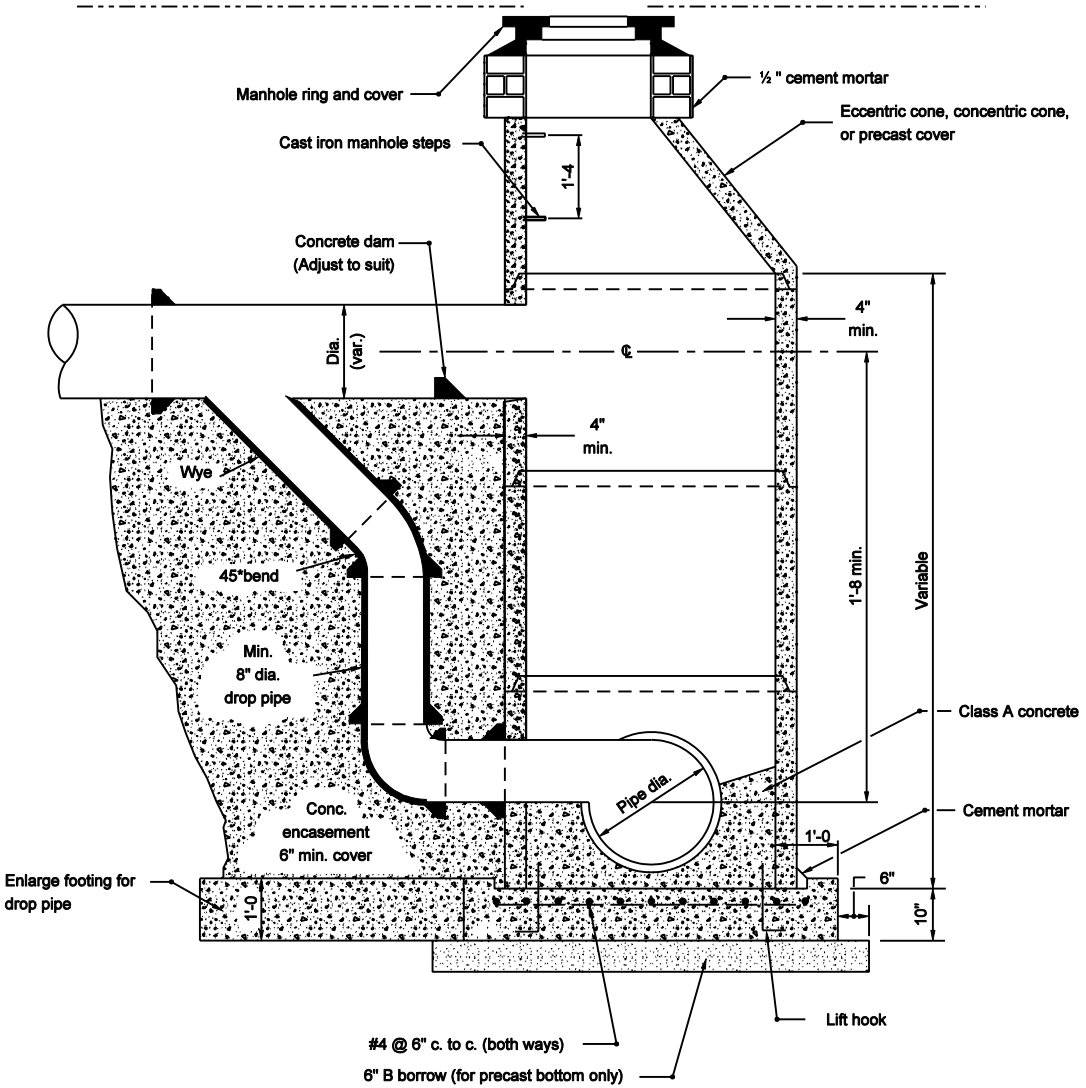

SECTION

INDIANA DEPARTMENT OF TRANSPORTATION

DROP MANHOLE TYPE C

SEPTEMBER 2003

STANDARD DRAWING NO. E 720-MHST-03

RICHARD L. VanCLEAVE REGISTERED No. 9750 STATE OF INDIANA PROFESSIONAL ENGINEER

DESIGN STANDARDS ENGINEER

/s/ Richard L. VanCleave 9-02-03
DESIGN STANDARDS ENGINEER DATE

/s/ Richard K. Smutzer 9-02-03
CHIEF HIGHWAY ENGINEER DATE

MANHOLE DIMENSIONS		
TYPE	A-1 PIPE SIZE DIA. (in)	B AND D
D	27 to 42	4'-9
E	48 to 60	6'-6
F	66 to 84	8'-10
G	90 to 108	11'-2

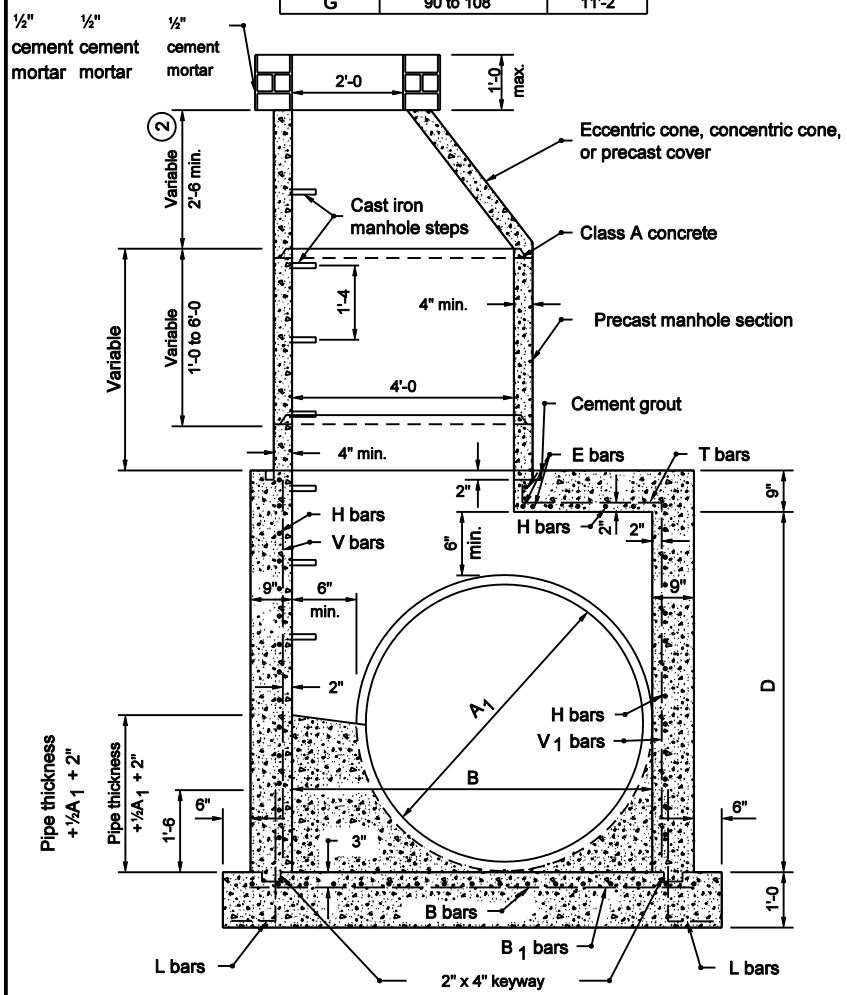

SECTION A-A

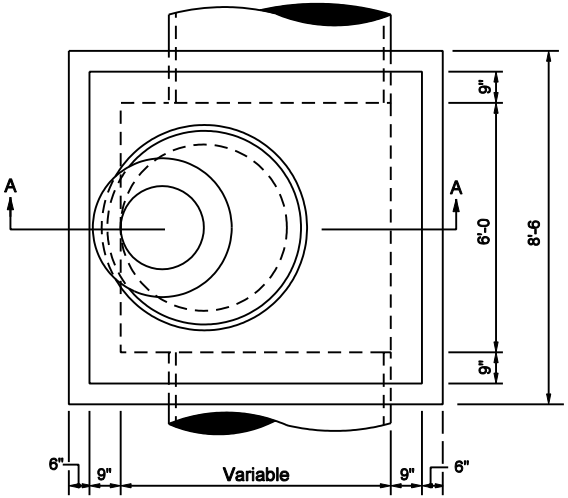

PLAN VIEW

NOTES

1. Manhole type H, J, K, L, M, or N, may be substituted for manhole type C, D, E, or F for comparable pipe sizes. See Standard Drawing E 720-MHST-05 for manholes type H, J, K, L, M, and N details.

(2) For eccentric and concentric cone heights see Cone Heights Table on Standard Drawing 720-MHST-08.

3. See Standard Drawing 720-MHST-10 for Reinforcing Steel for Manholes table.

INDIANA DEPARTMENT OF TRANSPORTATION

MANHOLES TYPE D, E, F, AND G

SEPTEMBER 2003

STANDARD DRAWING NO. E 720-MHST-04

RICHARD L. VANCLEAVE REGISTERED No. 9750 STATE OF INDIANA PROFESSIONAL ENGINEER

DESIGN STANDARDS ENGINEER

/s/ Richard L. VanCleave 9-02-03
DESIGN STANDARDS ENGINEER DATE

/s/ Richard K. Smutzer 9-02-03
CHIEF HIGHWAY ENGINEER DATE

MANHOLE PIPE SIZES				
Type	G (in.)	F (ft. in.)	Maximum Pipe Size Rt. ∠ to Mainline (in.)	Maximum Pipe Size for Mainline (in.)
H	24 to 36	——	30	36
J	24 to 36	5'-0	30	36
K	36 to 48	6'-0	36	48
L	48 to 54	8'-0	48	54
M	54 to 72	8'-6	66	72
N	72 to 84	9'-0	72	84

NOTES

1. Drop pipe may be used with manholes Type H, J, K, L, M, or N. Such manhole shall be referred to as drop manholes type H, J, K, L, M, or N. For details of construction see Standard Drawing E 720-MHST-03.
2. See Standard Drawing E 720-MHST-06 for Details A, B, and C.
3. Manholes type C, D, E, or F. may be substituted for manholes type H, J, K, L, M, or N. for comparable pipe sizes. See Standard Drawings E 720-MHST-02 and -04 for manholes type D, E, F, and G details..

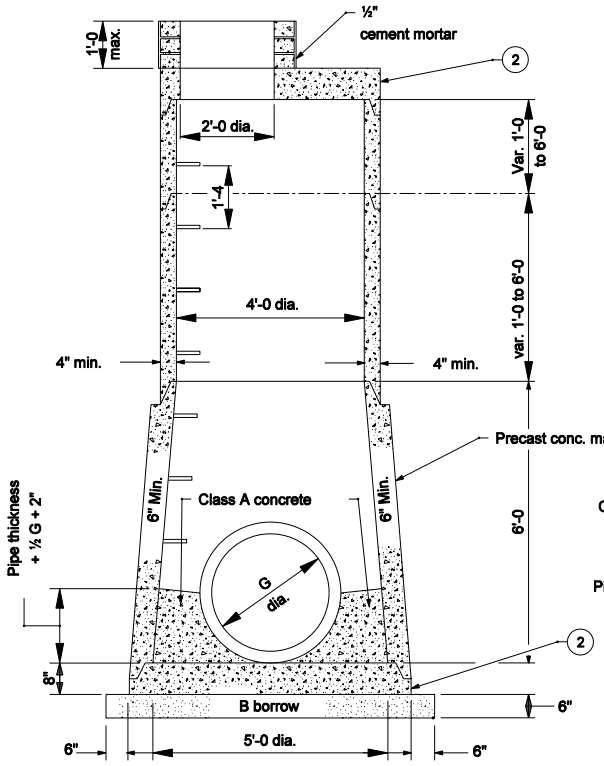

MANHOLE TYPE H

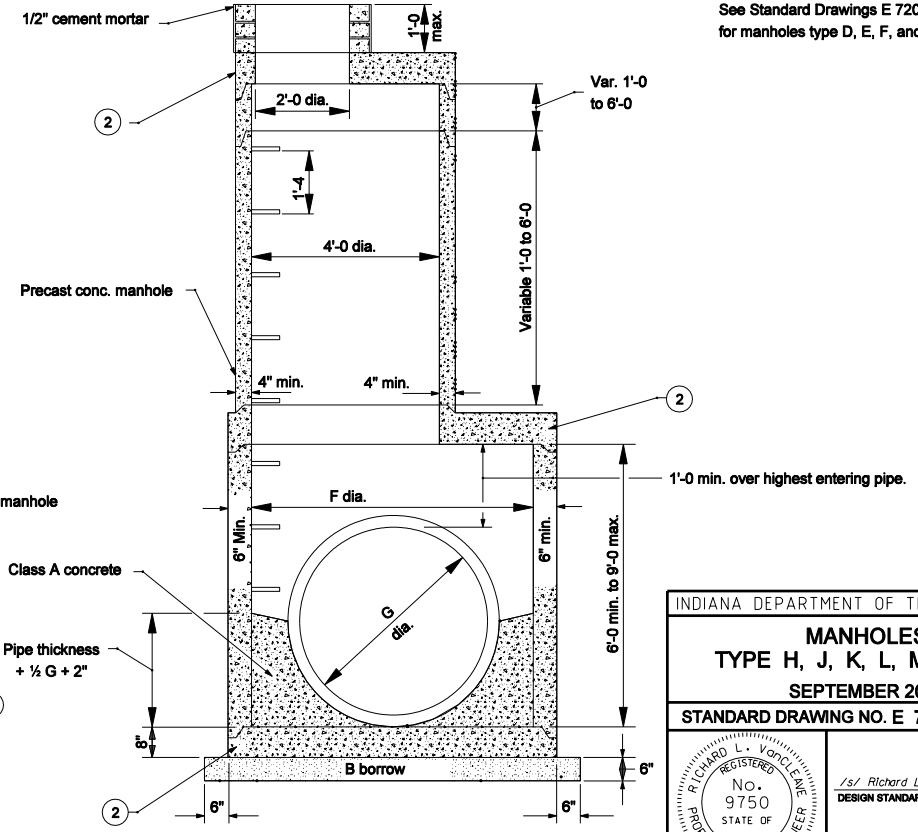

MANHOLE TYPE J,K,L,M & N

INDIANA DEPARTMENT OF TRANSPORTATION

MANHOLES TYPE H, J, K, L, M, AND N

SEPTEMBER 2006

STANDARD DRAWING NO. E 720-MHST-05

RICHARD L. VanCLEAVE REGISTERED No. 9750 STATE OF INDIANA PROFESSIONAL ENGINEER

DESIGN STANDARDS ENGINEER

/s/ Richard L. VanCleave 9-01-06
DESIGN STANDARDS ENGINEER DATE

/s/ Richard K. Smutzer 9-01-06
CHIEF HIGHWAY ENGINEER DATE

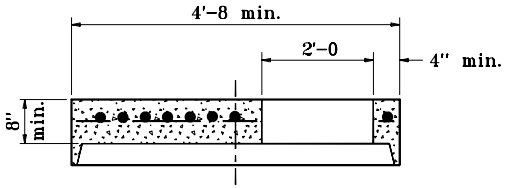

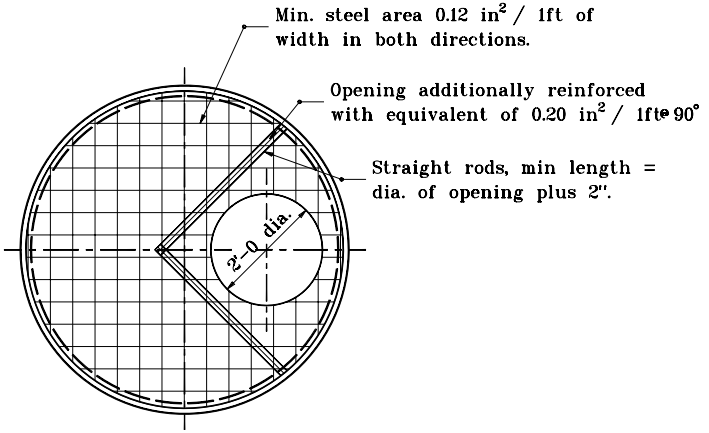

DETAIL A

COVER CAP FOR PRECAST CONCRETE MANHOLE SECTION

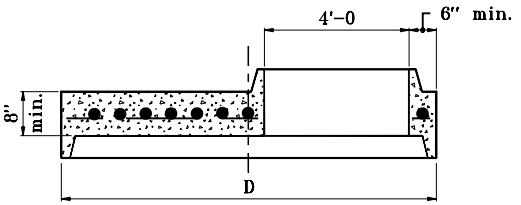

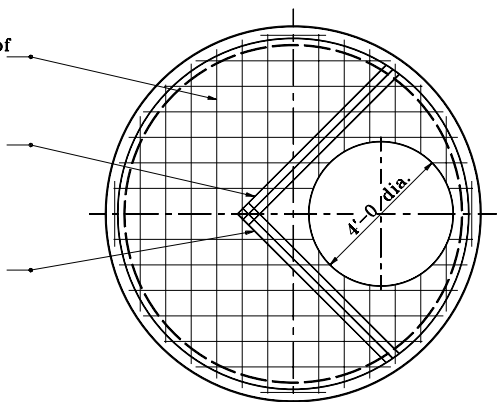

Section Dia.	D
5'-0	6'-0
6'-0	7'-2
8'-0	9'-6
8'-6	10'-0
9'-0	10'-8

DETAIL B

REDUCER CAP FOR PRECAST MANHOLE SECTION (5'-0 to 9'-0 DIA.)

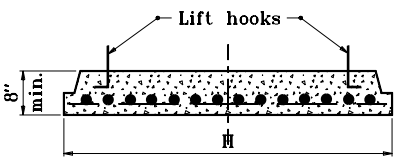

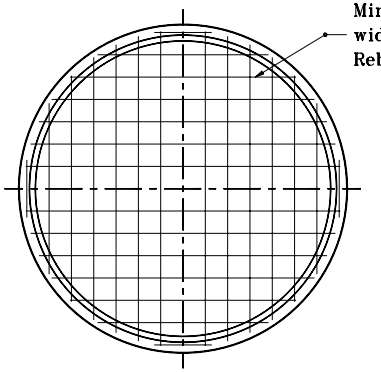

Section Dia.	H
5'-0	6'-0
6'-0	7'-2
8'-0	9'-6
8'-6	10'-0
9'-0	10'-8

DETAIL C

BASE FOR PRECAST CONCRETE MANHOLE SECTIONS (5'-0 to 9'-0 DIA.)

INDIANA DEPARTMENT OF TRANSPORTATION

PRECAST CONCRETE MANHOLE SECTIONS

APRIL 1995

STANDARD DRAWING NO. **E 720-MHST-06**

ANTHONY L. UREMOVICH REGISTERED No. 18095 STATE OF INDIANA PROFESSIONAL ENGINEER

DESIGN STANDARDS ENGINEER

DETAILS PLACED IN THIS FORMAT	11-15-99
/s/ Anthony L. Uremovich, DESIGN STANDARDS ENGINEER	11-15-99
/s/ Firooz Zandi, CHIEF HIGHWAY ENGINEER	11-15-99
ORIGINALLY APPROVED	4-03-95

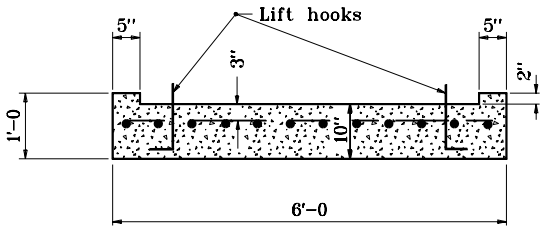

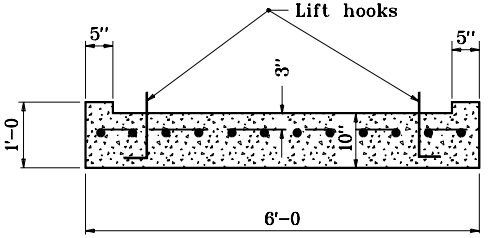

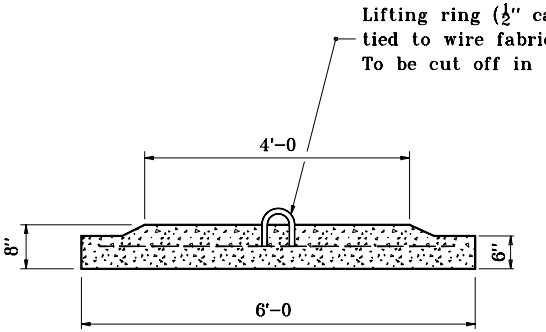

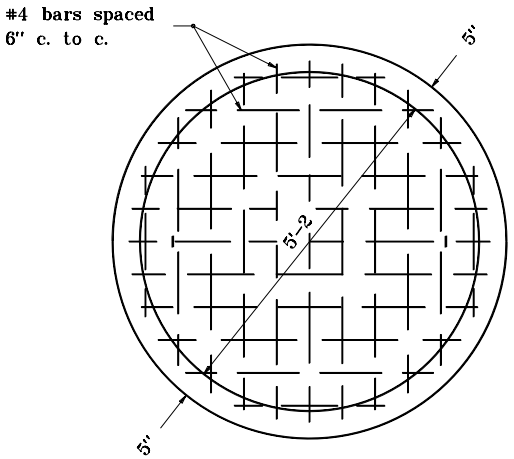

ROUND

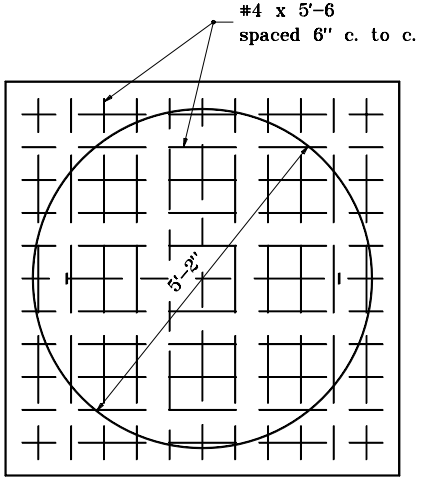

SQUARE

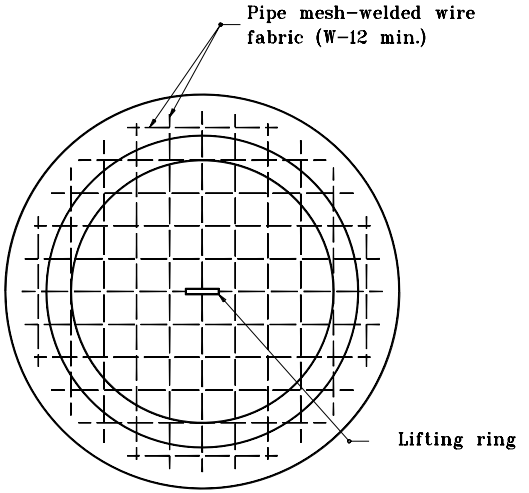

ROUND ALTERNATE

INDIANA DEPARTMENT OF TRANSPORTATION

PRECAST MANHOLE BOTTOM SECTION

SEPTEMBER 1997

STANDARD DRAWING NO. **E 720-MHST-07**

ANTHONY L. URENOVICH REGISTERED No. 18095 STATE OF INDIANA PROFESSIONAL ENGINEER

DESIGN STANDARDS ENGINEER

DETAILS PLACED IN THIS FORMAT	11-15-99
/s/ Anthony L. Uremovich DESIGN STANDARDS ENGINEER	11-15-99 DATE
/s/ Firooz Zandi CHIEF HIGHWAY ENGINEER	11-15-99 DATE
ORIGINALLY APPROVED	9-01-97

NOTES

1. The concentric concrete section will not be permitted for manholes which are under the jurisdiction of the Indianapolis Sanitary District.

CONE HEIGHTS	
ECCENTRIC	CONCENTRIC
2'-6	2'-6
3'-0	3'-0
3'-2	3'-2
3'-6	4'-0

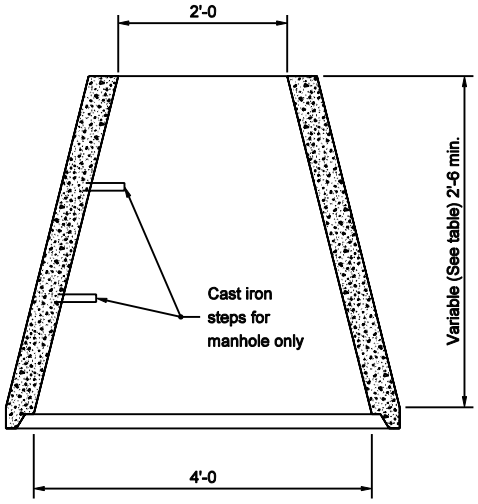

CONCENTRIC CONE

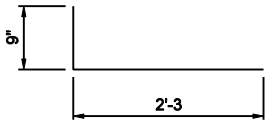

L BARS

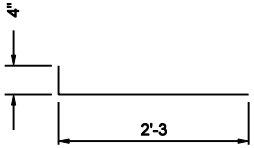

T BARS

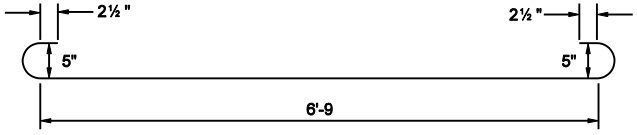

H BARS

INDIANA DEPARTMENT OF TRANSPORTATION

MANHOLE BARS AND CONECNTRIC CONE

SEPTEMBER 2003

STANDARD DRAWING NO. E 720-MHST-08

RICHARD L. VanCLEAVE REGISTERED No. 9750 STATE OF INDIANA PROFESSIONAL ENGINEER

DESIGN STANDARDS ENGINEER

/s/ Richard L. VanCleave 9-02-03
DESIGN STANDARDS ENGINEER DATE

/s/ Richard K. Smutzer 9-02-03
CHIEF HIGHWAY ENGINEER DATE

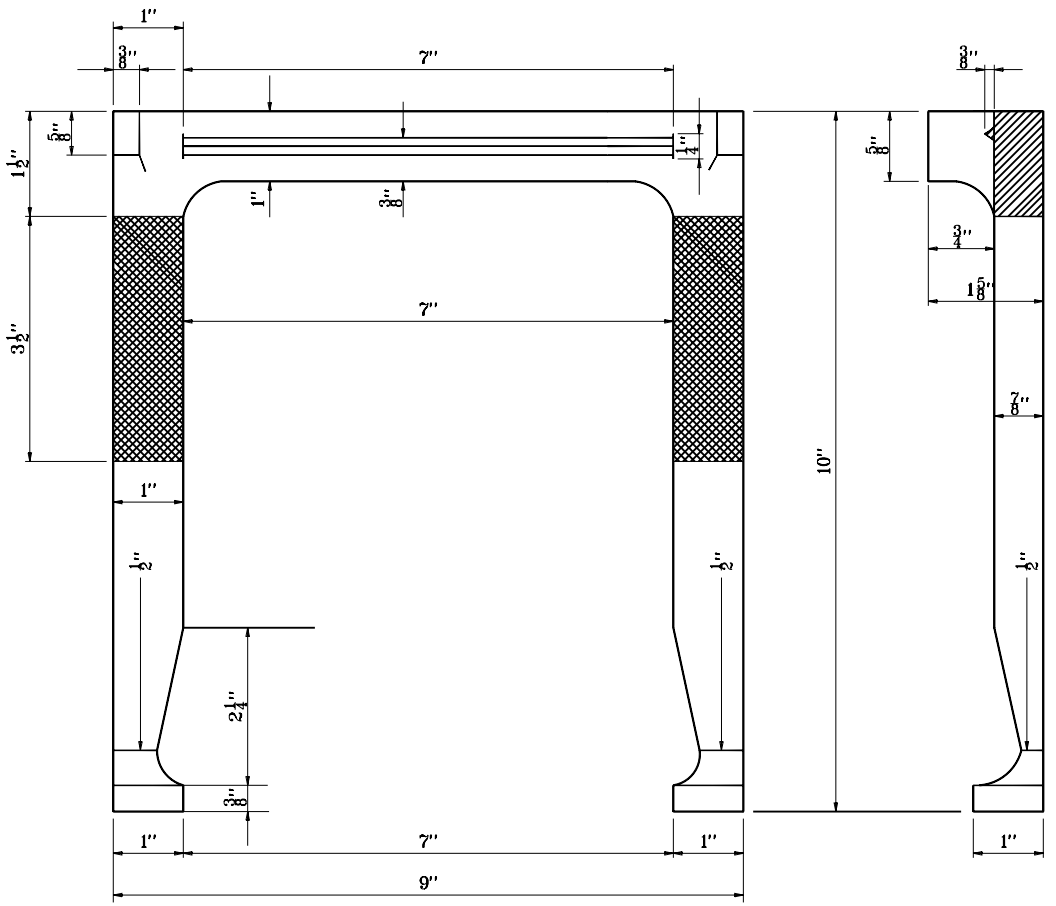

INDIANA DEPARTMENT OF TRANSPORTATION

MANHOLE STEP

APRIL 1995

STANDARD DRAWING NO. **E 720-MHST-09**

ANTHONY L. UREMOVICH REGISTERED No. 18095 STATE OF INDIANA PROFESSIONAL ENGINEER

DESIGN STANDARDS ENGINEER

DETAILS PLACED IN THIS FORMAT	11-15-99
/s/ Anthony L. Uremovich	11-15-99
DESIGN STANDARDS ENGINEER	DATE
/s/ Firooz Zandi	11-15-99
CHIEF HIGHWAY ENGINEER	DATE
ORIGINALLY APPROVED	4-03-95

REINFORCING STEEL FOR MANHOLES																
	Manhole Type D				Manhole Type E				Manhole Type F				Manhole Type G			
Bars	Length	No.	Spa.	Size	Length	No.	Spa.	Size	Length	No.	Spa.	Size	Length	No.	Spa.	Size
B	8'–0	10	9''	#5	8'–0	12	9''	#5	8'–0	16	9''	#5	8'–0	19	9''	#5
B_1	6'–9	12	9''	#5	8'–6	12	9''	#5	11'–0	12	9''	#5	13'–3	12	9''	#5
E	7'–3	3	2''	#5	7'–3	3	2''	#5	7'–3	3	2''	#5	7'–3	3	2''	#5
H	8'–6	22	6''	#5	8'–6	33	6''	#5	8'–6	41	6''	#5	8'–6	58	6''	#5
L	3'–0	16	12''	#5	3'–0	16	12''	#5	3'–0	16	12''	#5	3'–0	16	12''	#5
T	1'–3	16	6''	#5	3'–0	16	6''	#5	5'–3	16	6''	#5	7'–6	16	6''	#5
V	5'–0	16	6''	#5	6'–9	16	6''	#5	9'–0	16	6''	#5	11'–6	16	6''	#5
V_1	4'–9	16	6''	#5	6'–6	16	6''	#5	8'–9	16	6''	#5	11'–3	16	6''	#5

INDIANA DEPARTMENT OF TRANSPORTATION

TABLE OF REINFORCING STEEL FOR MANHOLES

SEPTEMBER 1997

STANDARD DRAWING NO. **E 720–MHST–10**

ANTHONY L. UREMOVICH REGISTERED No. 18095 STATE OF INDIANA PROFESSIONAL ENGINEER

DESIGN STANDARDS ENGINEER

DETAILS PLACED IN THIS FORMAT 11-15-99

/s/ Anthony L. Uremovich 11-15-99
DESIGN STANDARDS ENGINEER DATE

/s/ Firooz Zandi 11-15-99
CHIEF HIGHWAY ENGINEER DATE

ORIGINALLY APPROVED 9-02-97

GENERAL NOTES

① See Standard Drawing E 720-SDCP-02 for casting details.

② See Standard Drawing E 720-SDCP-03 for casting details.

③ ⅜" x 1½" stainless steel nonthreaded hex head bolt with locknut washer. (typ.)

④ Class A concrete, 6" min. thick. (typ.)

5. Cleanout ports shall be spaced at 250 ft or as shown on plans.

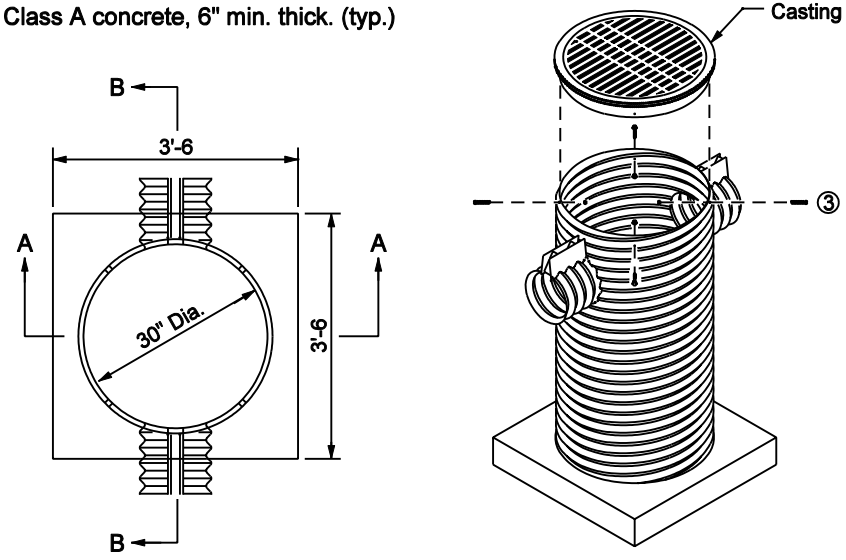

PLAN

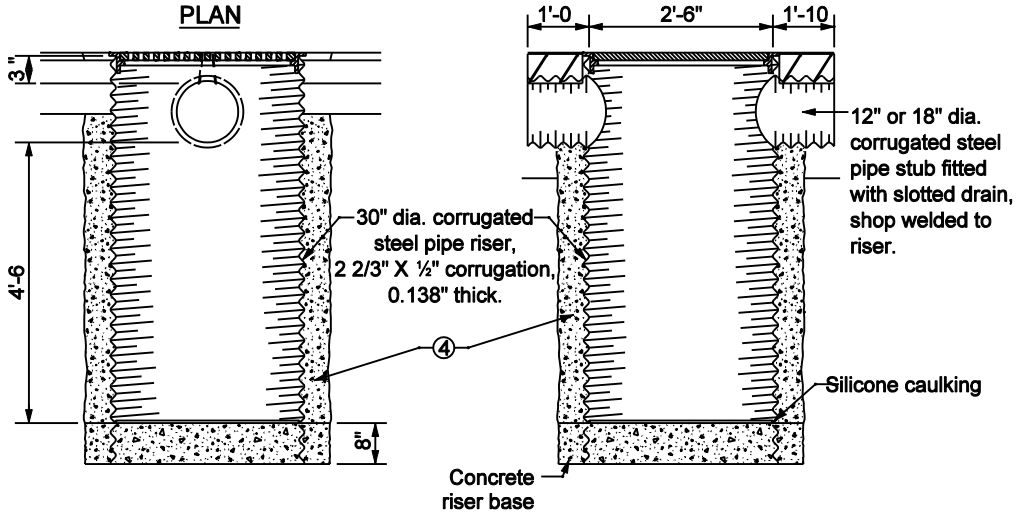

TYPE I
STEEL PIPE PORT

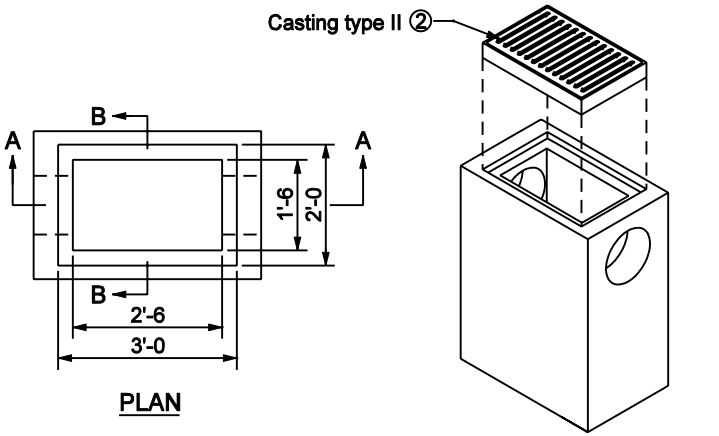

PLAN

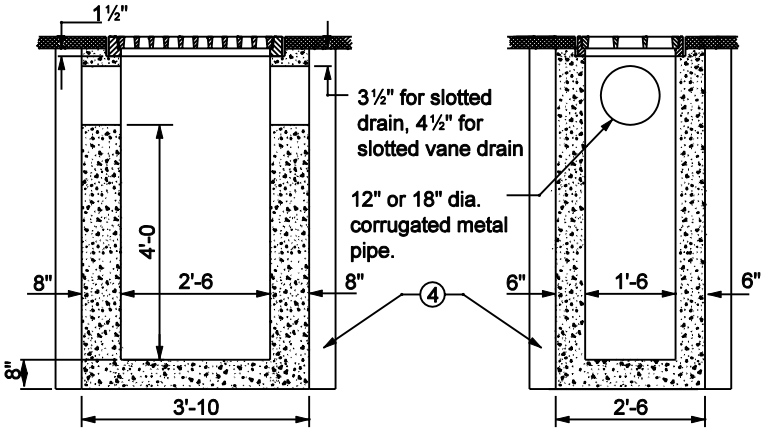

SECTION A-A

SECTION B-B

TYPE II
CONCRETE BOX PORT

INDIANA DEPARTMENT OF TRANSPORTATION

SLOTTED DRAIN PIPE CLEANOUT PORT

MARCH 2003

STANDARD DRAWING NO. E 720-SDCP-01

RICHARD L. VanCLEAVE REGISTERED No. 9750 STATE OF INDIANA PROFESSIONAL ENGINEER

DESIGN STANDARDS ENGINEER

/s/ Richard L. VanCleave 3-03-03
DESIGN STANDARDS ENGINEER DATE

/s/ Richard K. Smutzer 3-03-03
CHIEF HIGHWAY ENGINEER DATE

GENERAL NOTES

1. Casting total weight 235 lbs.
2. Casting finish: no paint.

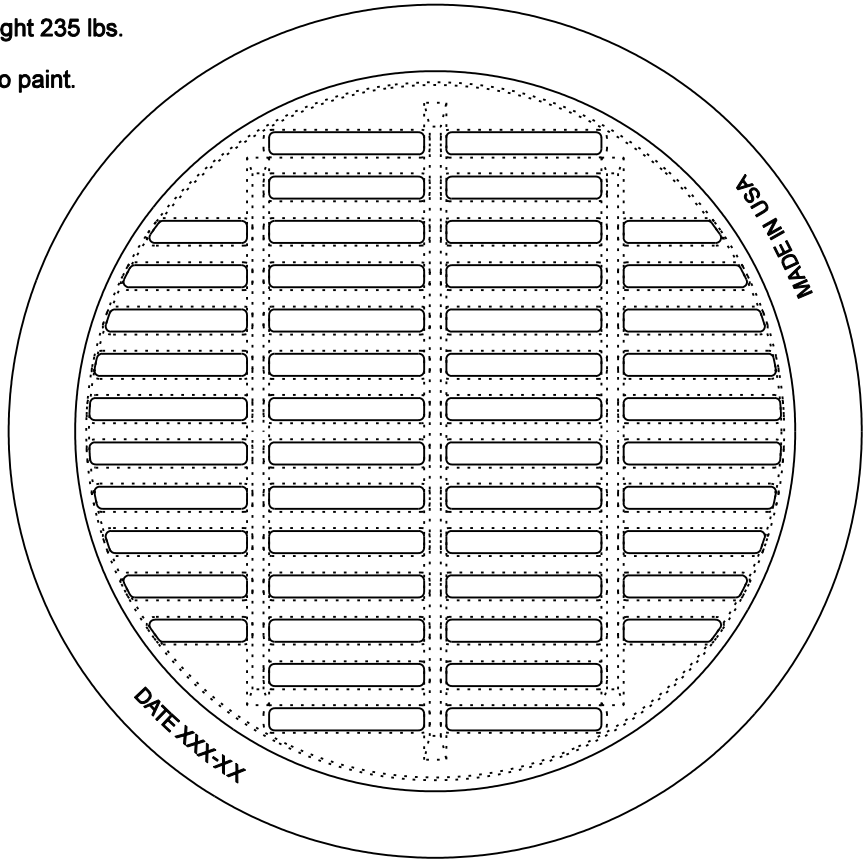

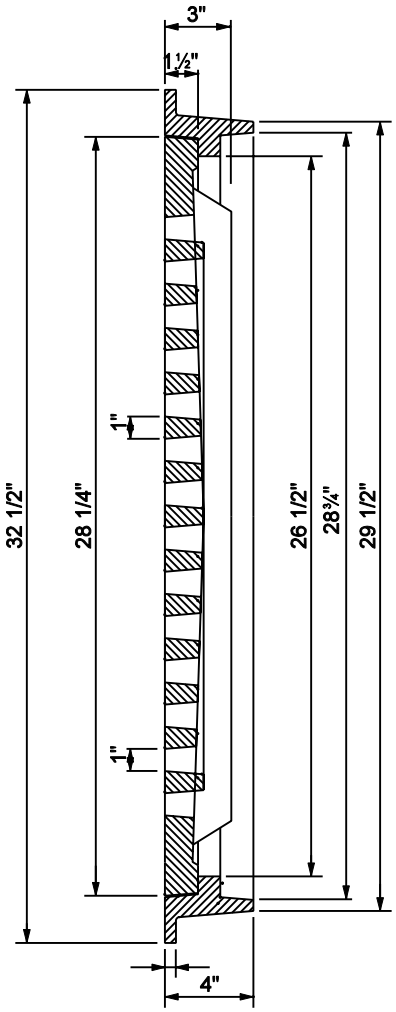

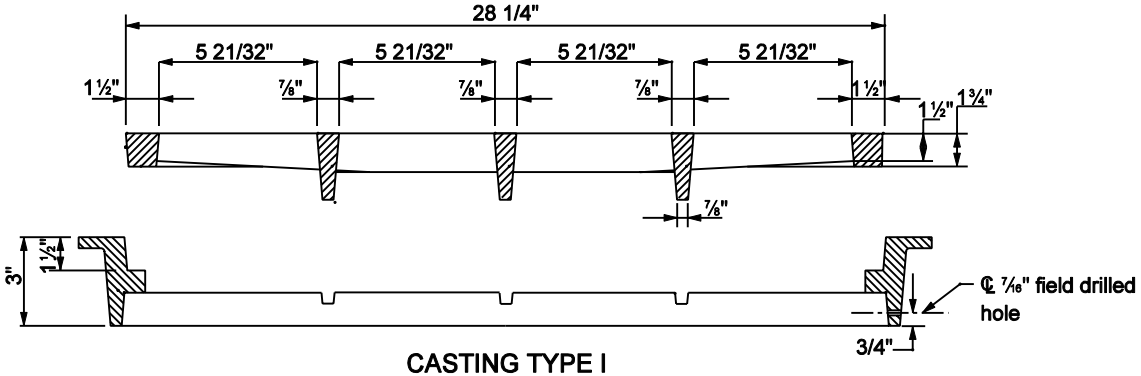

CASTING TYPE I

INDIANA DEPARTMENT OF TRANSPORTATION

CASTING TYPE I FRAME AND GRATE

MARCH 2003

STANDARD DRAWING NO. E 720-SDCP-02

RICHARD L. VanCLEAVE REGISTERED No. 9750 STATE OF INDIANA PROFESSIONAL ENGINEER

DESIGN STANDARDS ENGINEER

/s/ Richard L. VanCleave 3-03-03
DESIGN STANDARDS ENGINEER DATE

/s/ Richard K. Smutzer 3-03-03
CHIEF HIGHWAY ENGINEER DATE

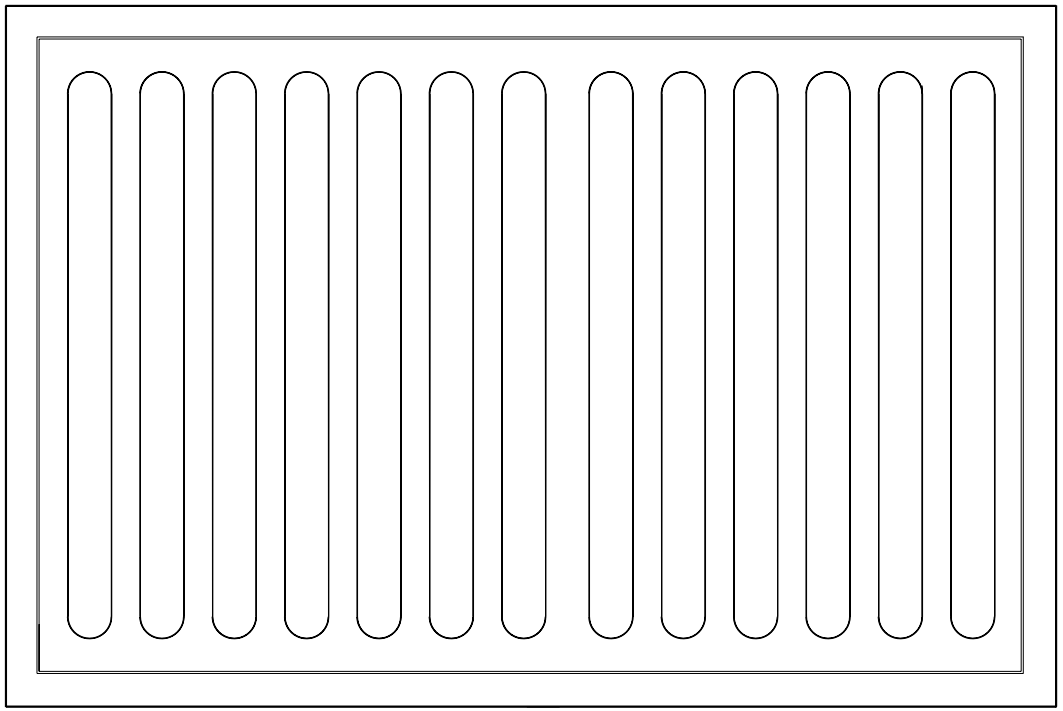

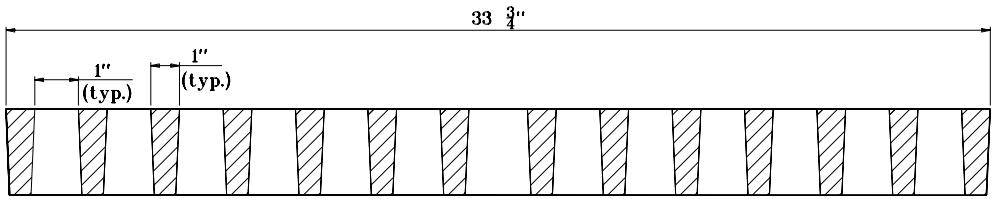

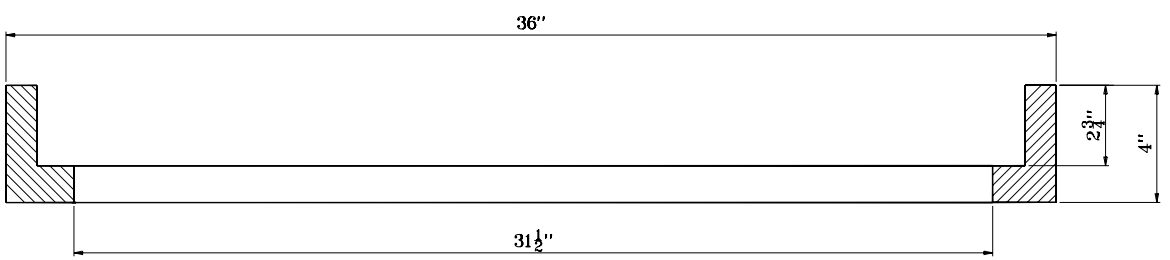

CASTING TYPE II

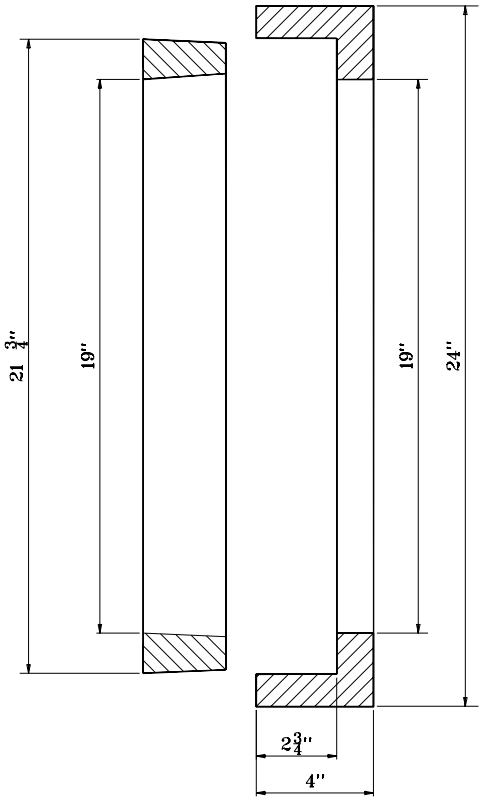

GENERAL NOTES

1. Casting total weight 440 lb.

2. Casting finish: no paint.

INDIANA DEPARTMENT OF TRANSPORTATION

CASTING TYPE II
FRAME AND GRATE

JANUARY 1999

STANDARD DRAWING NO. E 720-SDCP-03

ANTHONY L. UREMOVICH REGISTERED No. 18095 STATE OF INDIANA PROFESSIONAL ENGINEER

DESIGN STANDARDS ENGINEER

DETAILS PLACED IN THIS FORMAT	11-15-99
/s/ Anthony L. Uremovich	11-15-99
DESIGN STANDARDS ENGINEER	DATE
/s/ Firooz Zandi	11-15-99
CHIEF HIGHWAY ENGINEER	DATE
ORIGINALLY APPROVED	1-04-99

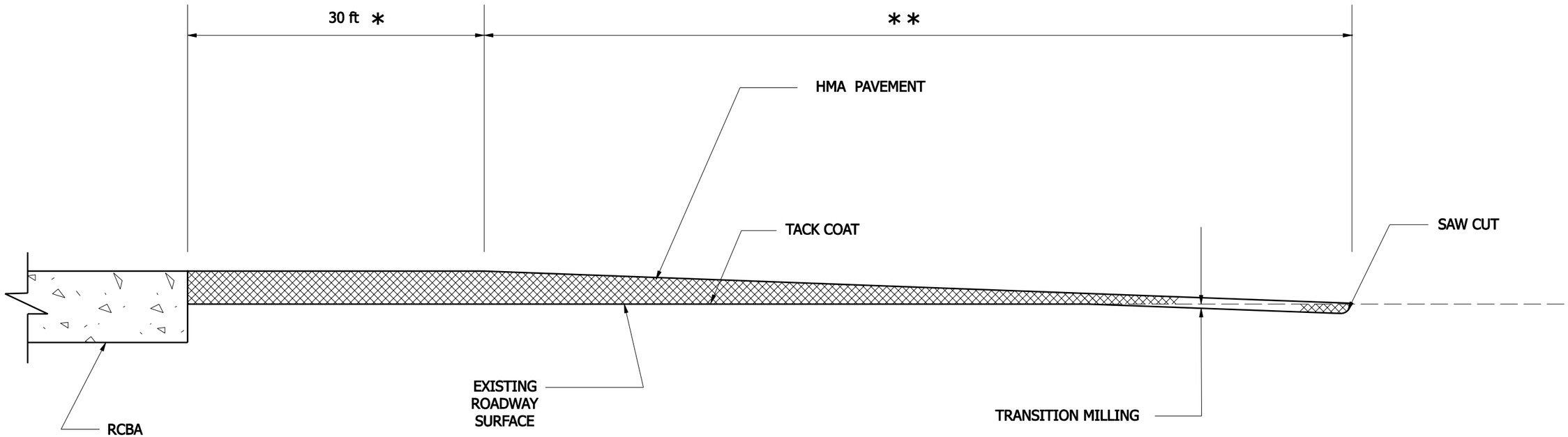

* WEDGE TO BE A CONTINUATION OF BRIDGE DECK PROFILE.

* * WEDGE AND TRANSITION MILLING LIMITS PER STANDARD DRAWING E 306-TMPT-01.

INDIANA DEPARTMENT OF TRANSPORTATION

HMA PAVEMENT WEDGE AT RCBA

SEPTEMBER 2007

STANDARD DRAWING NO. E 722-HMAW-01

RICHARD L. VanCLEAVE REGISTERED No. 9750 STATE OF INDIANA PROFESSIONAL ENGINEER

DESIGN STANDARDS ENGINEER

/s/ Richard L. VanCleave 09/04/07

DESIGN STANDARDS ENGINEER — DATE

/s/ Mark A. Miller 09/04/07

CHIEF HIGHWAY ENGINEER — DATE

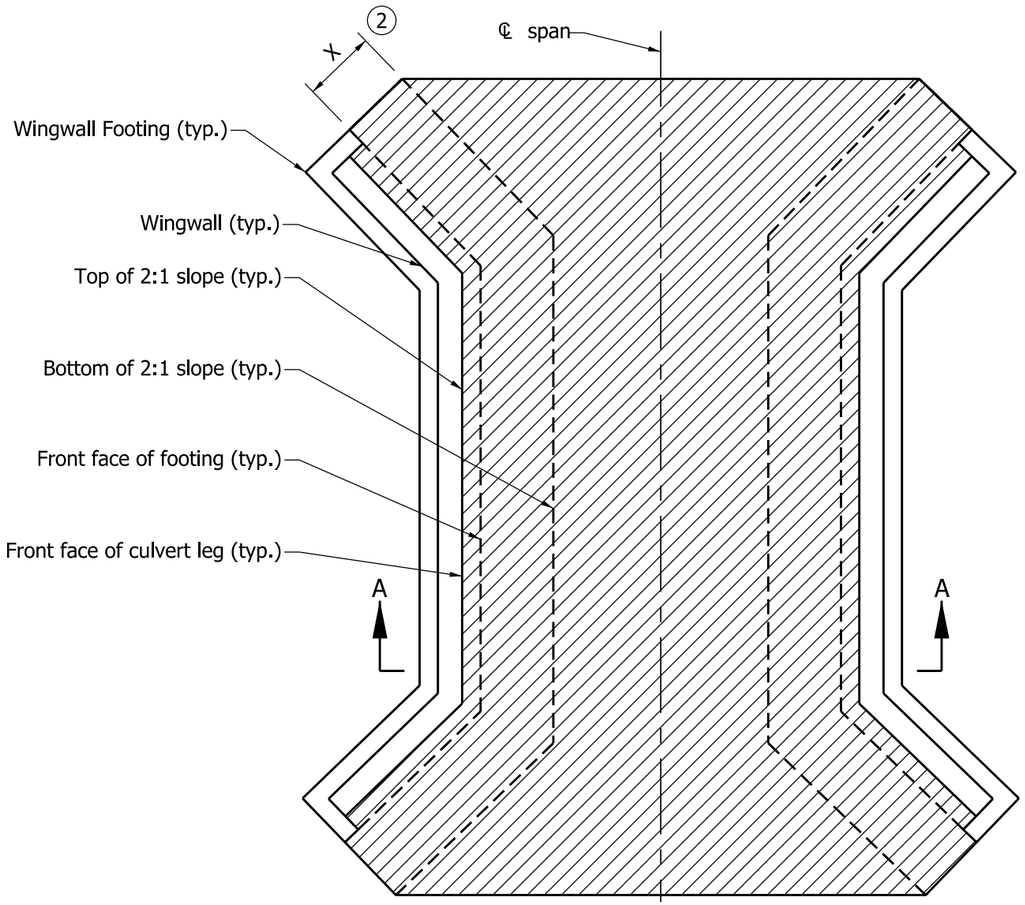

RIPRAP METHOD

PLAN - WITH WINGWALLS

NOTES:

1. See Standard Drawing E 723-CCSP-02 for Section A-A.
2. Distance X is equal to two times the sump depth shown on plans.

LEGEND:

Riprap on geotextiles as shown on the plans.

INDIANA DEPARTMENT OF TRANSPORTATION

THREE-SIDED CONCRETE CULVERT
SCOUR PROTECTION
10'-0" ≤ SPAN WIDTH < 20'-0"

SEPTEMBER 2011

STANDARD DRAWING NO. E 723-CCSP-01

RICHARD L. VanCLEAVE REGISTERED No. 9750 STATE OF INDIANA PROFESSIONAL ENGINEER

DESIGN STANDARDS ENGINEER

/s/ Richard L.VanCleave 09/01/11
DESIGN STANDARDS ENGINEER DATE

/s/ Mark A. Miller 09/01/11
CHIEF HIGHWAY ENGINEER DATE

NOTES:

1. See Standard Drawing E 723-CCSP-01 for plan view of Section A-A.

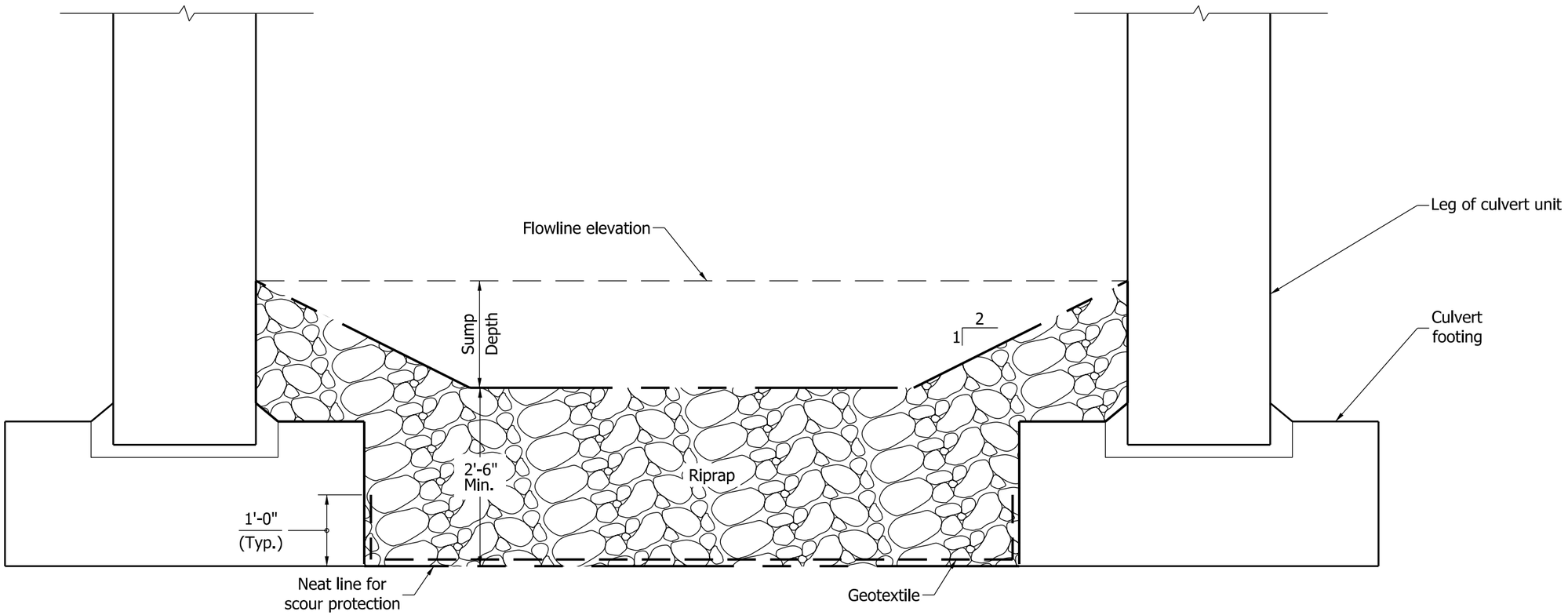

SECTION A-A

RIPRAP METHOD

INDIANA DEPARTMENT OF TRANSPORTATION

THREE-SIDED CONCRETE CULVERT
SCOUR PROTECTION, SECTION,
10'-0" ≤ SPAN WIDTH < 20'-0"

SEPTEMBER 2011

STANDARD DRAWING NO. E 723-CCSP-02

RICHARD L. VanCLEAVE REGISTERED No. 9750 STATE OF INDIANA PROFESSIONAL ENGINEER

DESIGN STANDARDS ENGINEER

/s/ Richard L.VanCleave 09/01/11
DESIGN STANDARDS ENGINEER DATE

/s/ Mark A. Miller 09/01/11
CHIEF HIGHWAY ENGINEER DATE

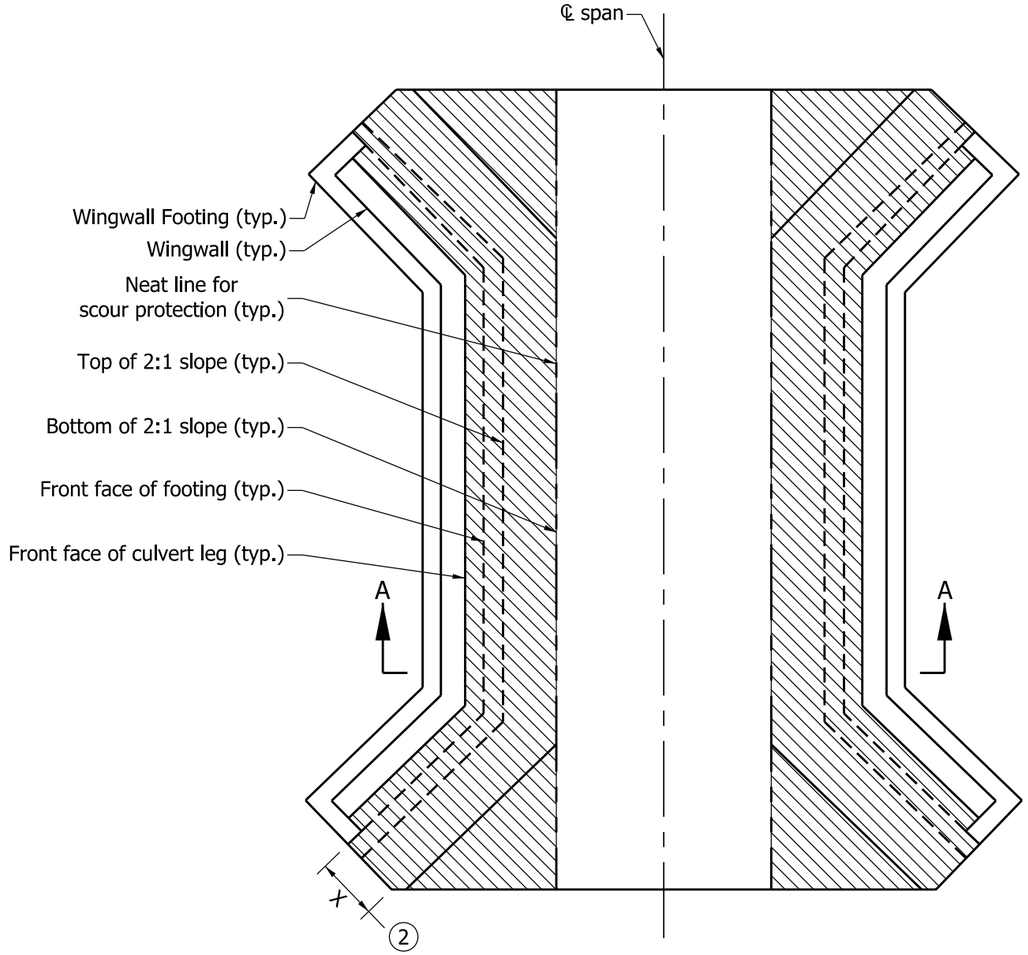

PLAN - WITH WINGWALLS

RIPRAP METHOD

NOTES:

1. See Standard Drawing E723-CCSP-04 for Section A-A.

(2) Distance X is equal to two times the sump depth shown on the plans or 6'-0", whichever is greater.

LEGEND:

Riprap on geotextiles as shown on the plans.

INDIANA DEPARTMENT OF TRANSPORTATION

THREE-SIDED CONCRETE STRUCTURE
SCOUR PROTECTION, PLAN,
SPAN WIDTH ≥ 20'-0"
SEPTEMBER 2011

STANDARD DRAWING NO. E 723-CCSP-03

RICHARD L. VanCLEAVE REGISTERED No. 9750 STATE OF INDIANA PROFESSIONAL ENGINEER

DESIGN STANDARDS ENGINEER

/s/ Richard L.VanCleave 09/01/11
DESIGN STANDARDS ENGINEER DATE

/s/ Mark A. Miller 09/01/11
CHIEF HIGHWAY ENGINEER DATE

NOTES:

1. See Standard Drawing E 723-CCSP-03 for plan view of Section A-A.

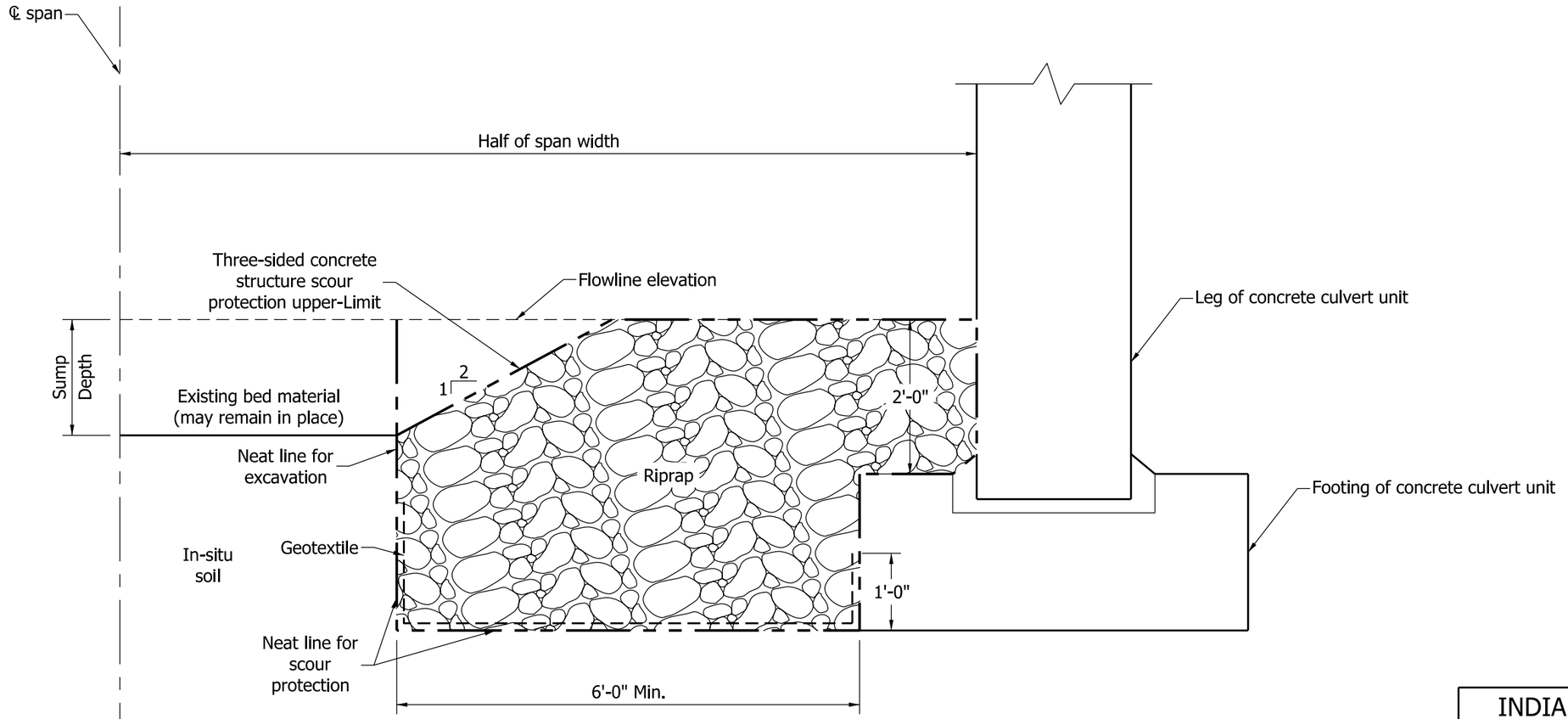

SECTION A-A

RIPRAP METHOD

INDIANA DEPARTMENT OF TRANSPORTATION

THREE-SIDED CONCRETE STRUCTURE
SCOUR PROTECTION, SECTION,
SPAN WIDTH ≥ 20'-0"

SEPTEMBER 2011

STANDARD DRAWING NO. E 723-CCSP-04

RICHARD L. VanCLEAVE REGISTERED No. 9750 STATE OF INDIANA PROFESSIONAL ENGINEER

DESIGN STANDARDS ENGINEER

/s/ Richard L.VanCleave 09/01/11
DESIGN STANDARDS ENGINEER DATE

/s/ Mark A. Miller 09/01/11
CHIEF HIGHWAY ENGINEER DATE

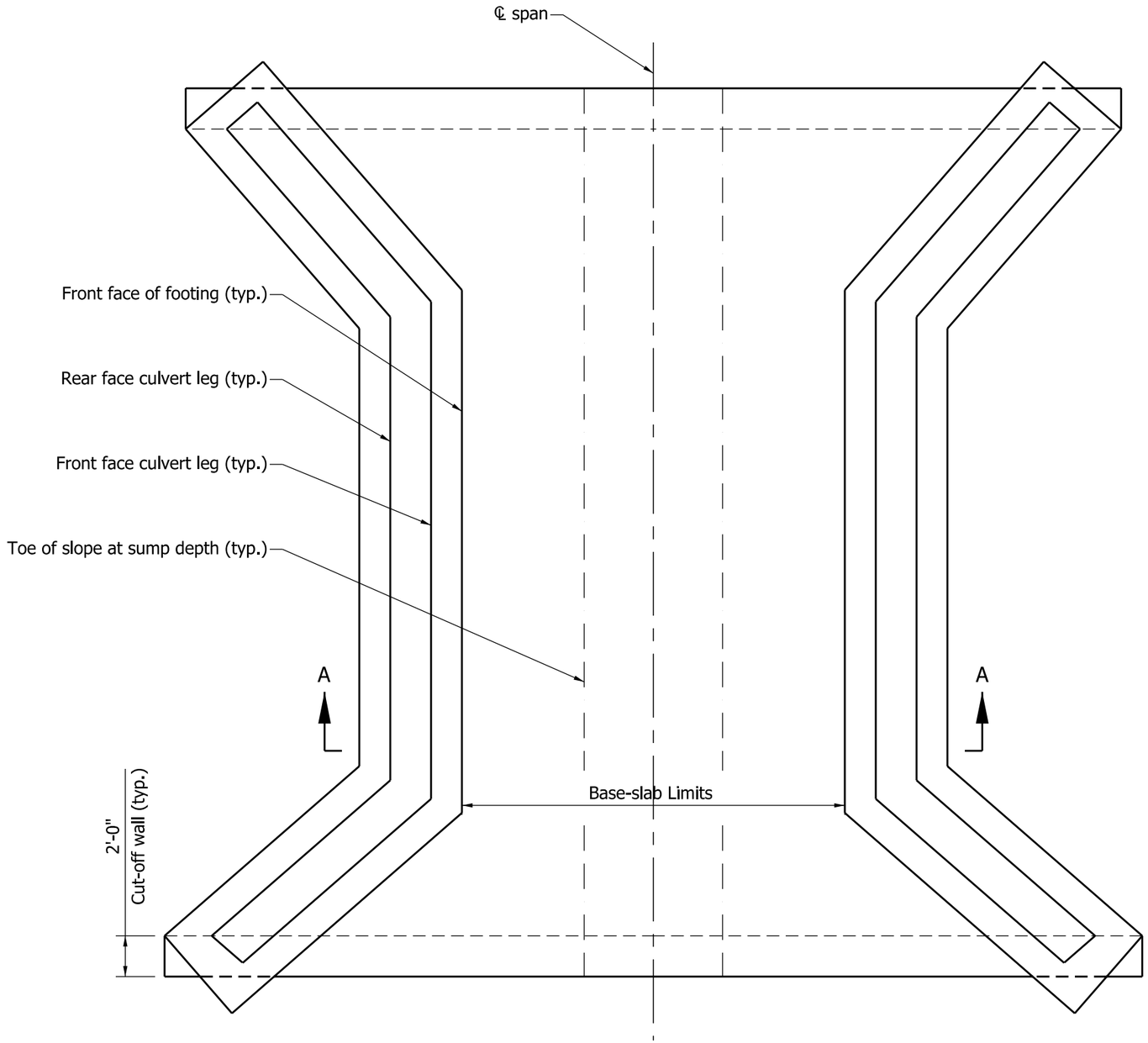

PLAN - WITH WINGWALLS

BASE SLAB METHOD

NOTES:

1. See Standard Drawing E 723-CCSP-06 for Section A-A.

INDIANA DEPARTMENT OF TRANSPORTATION

THREE-SIDED CONCRETE CULVERT
SCOUR PROTECTION, PLAN,
BASE-SLAB METHOD

SEPTEMBER 2011

STANDARD DRAWING NO. E 723-CCSP-05

RICHARD L. VanCLEAVE
REGISTERED
No. 9750
STATE OF INDIANA
PROFESSIONAL ENGINEER

DESIGN STANDARDS ENGINEER

/s/ Richard L.VanCleave 09/01/11
DESIGN STANDARDS ENGINEER DATE

/s/ Mark A. Miller 09/01/11
CHIEF HIGHWAY ENGINEER DATE

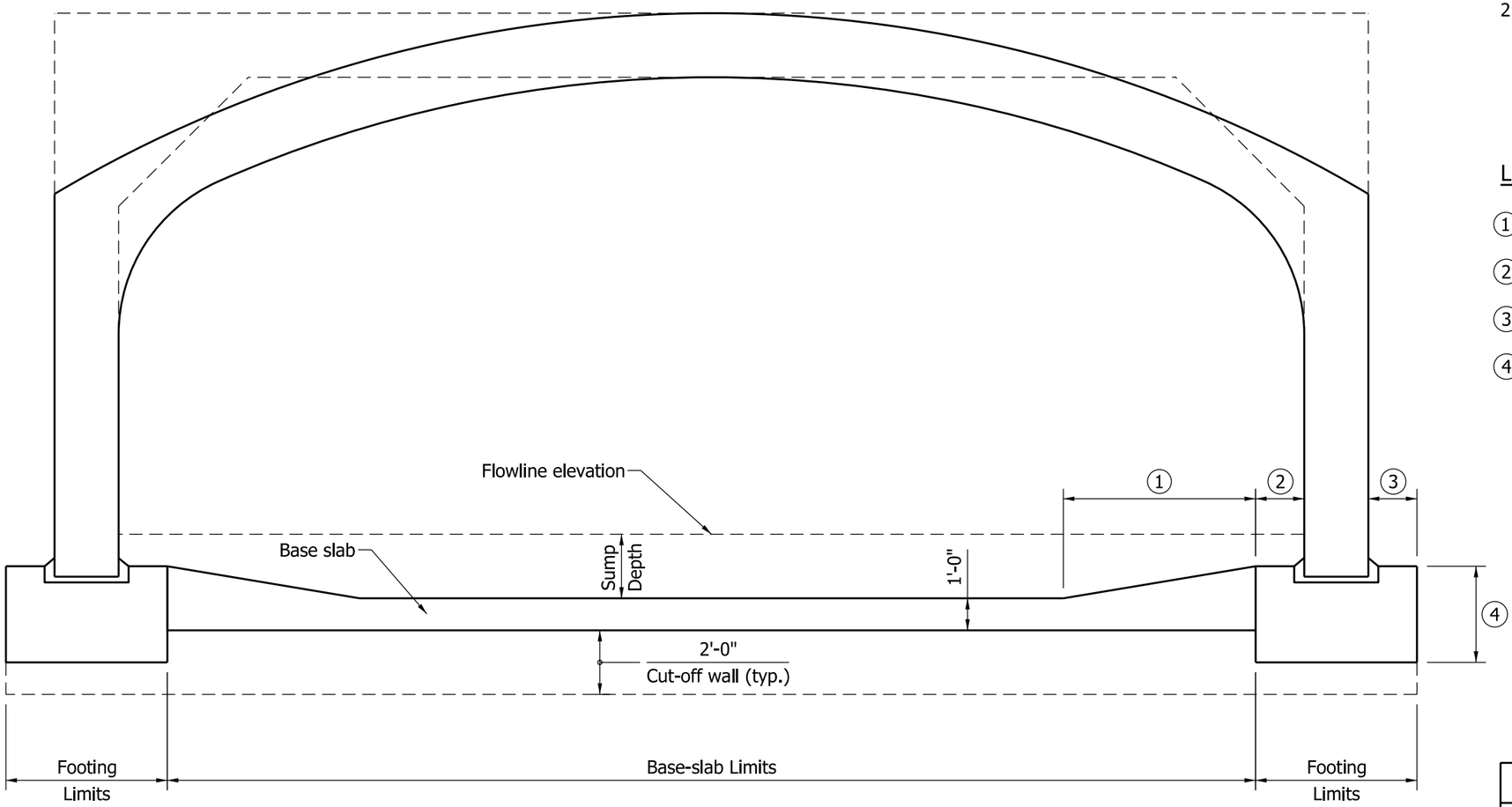

SECTION A-A

BASE SLAB METHOD

NOTES:

1. See the working drawings for dimension (1) through (4).
2. See Standard Drawing E 723-CCSP-05 for plan view of Section A-A

LEGEND:

(1) Taper length

(2) Inside-footing width

(3) Outside-footing width

(4) Footing depth

INDIANA DEPARTMENT OF TRANSPORTATION

THREE-SIDED CONCRETE CULVERT SCOUR PROTECTION, SECTION, BASE-SLAB METHOD

SEPTEMBER 2011

STANDARD DRAWING NO. E 723-CCSP-06

RICHARD L. VanCLEAVE REGISTERED No. 9750 STATE OF INDIANA PROFESSIONAL ENGINEER

DESIGN STANDARDS ENGINEER

/s/ Richard L.VanCleave 09/01/11

DESIGN STANDARDS ENGINEER DATE

/s/ Mark A. Miller 09/01/11

CHIEF HIGHWAY ENGINEER DATE

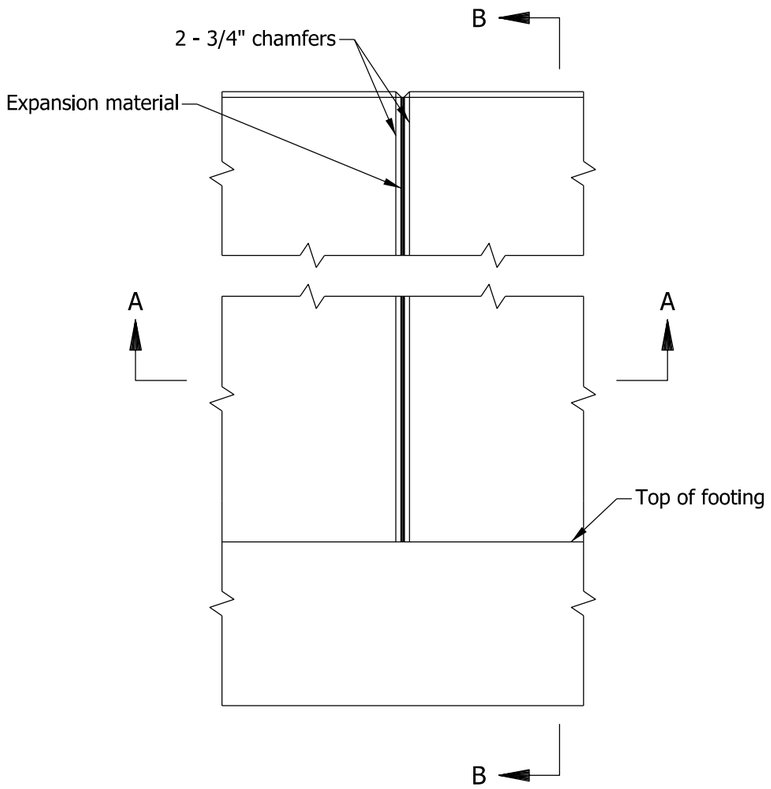

WALL FRONT FACE

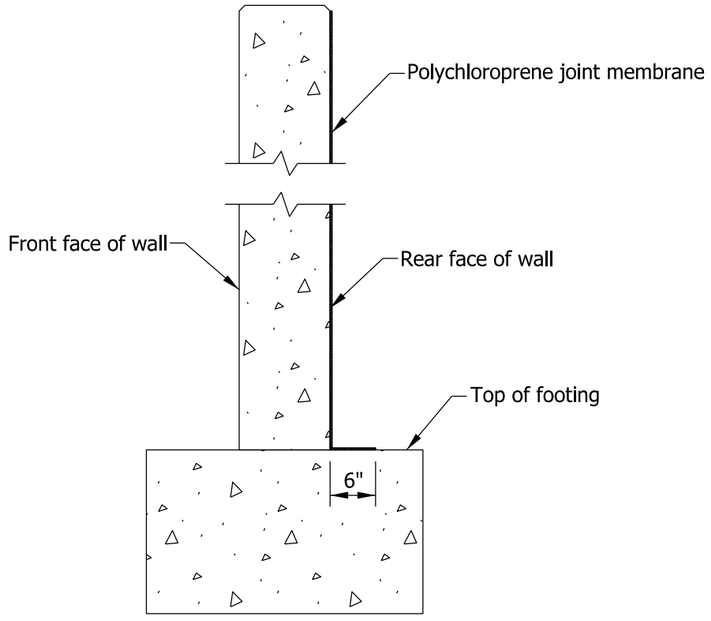

SECTION B-B

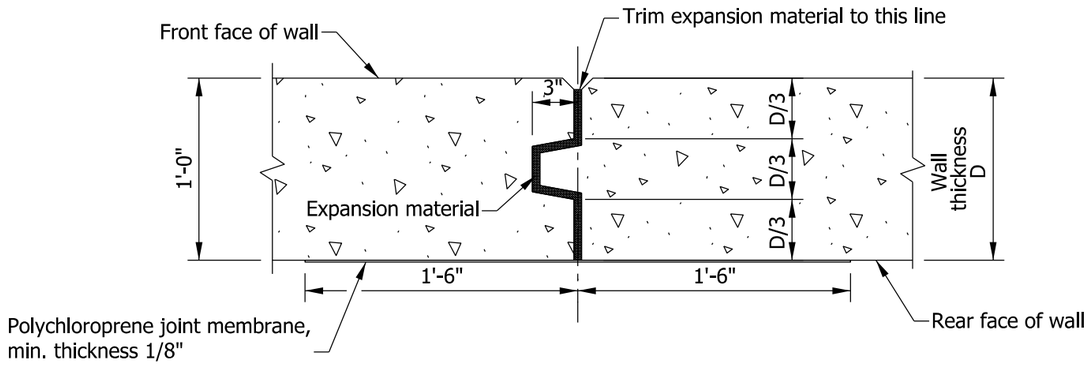

SECTION A-A

NOTES

1. Expansion material in joints shall be preformed joint filler.
2. All chamfered edges shall be 3/4".

INDIANA DEPARTMENT OF TRANSPORTATION

EXPANSION JOINT

SEPTEMBER 2012

STANDARD DRAWING NO. E 724-BJTS-01

RICHARD L. VanCLEAVE REGISTERED No. 9750 STATE OF INDIANA PROFESSIONAL ENGINEER

/s/ Richard L. Van Cleave 09/04/12

SUPERVISOR, ROADWAY STANDARDS DATE

/s/ Mark A. Miller 09/04/12

CHIEF ENGINEER DATE

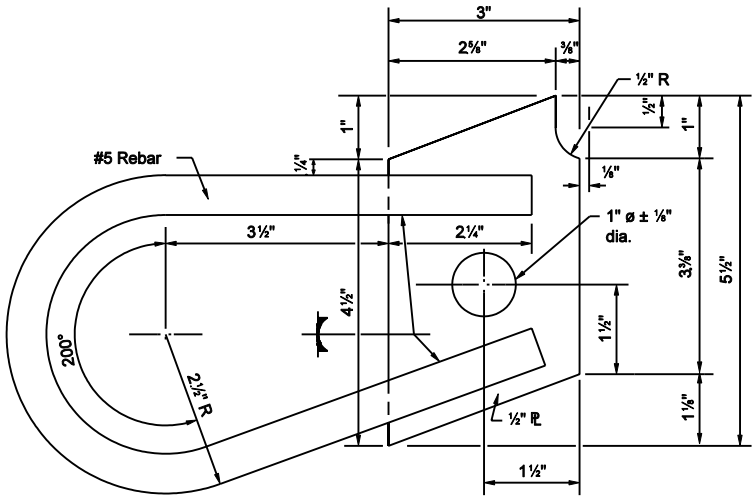

ANCHOR PLATE ALTERNATE A-1

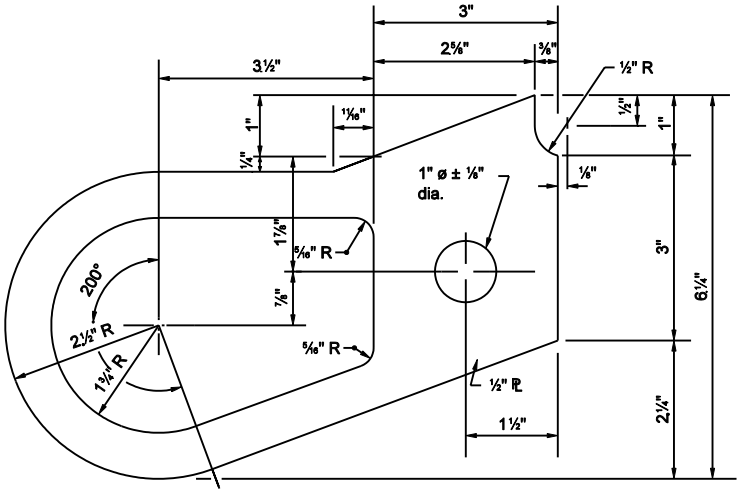

ANCHOR PLATE ALTERNATE A-2

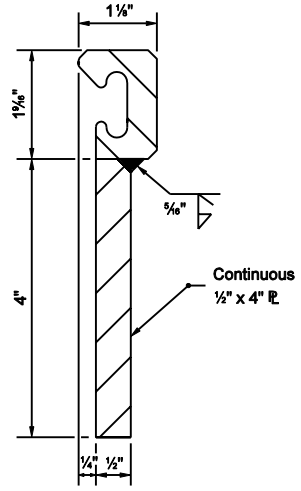

EXTRUSION & PLATE
ASSEMBLY DETAIL

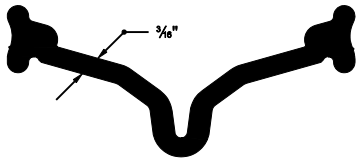

STRIP SEAL

INDIANA DEPARTMENT OF TRANSPORTATION

EXPANSION JOINTS
CLASS SS (ALTERNATE A)

SEPTEMBER 2003

STANDARD DRAWING NO. E 724-BSSJ -01

RICHARD L. VanCLEAVE
REGISTERED
No. 9750
STATE OF INDIANA
PROFESSIONAL ENGINEER

DESIGN STANDARDS ENGINEER

/s/ Richard L. VanCleave — 9-02-03
DESIGN STANDARDS ENGINEER — DATE

/s/ Richard K. Smutzer — 9-02-03
CHIEF HIGHWAY ENGINEER — DATE

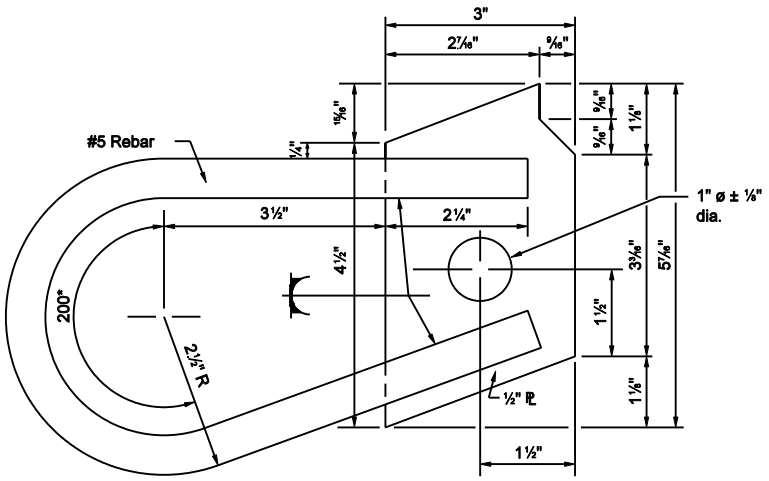

ANCHOR PLATE ALTERNATE B-1

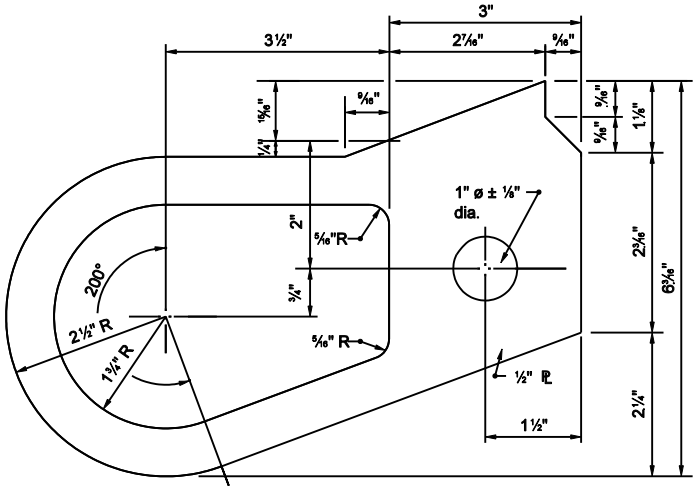

ANCHOR PLATE ALTERNATE B-2

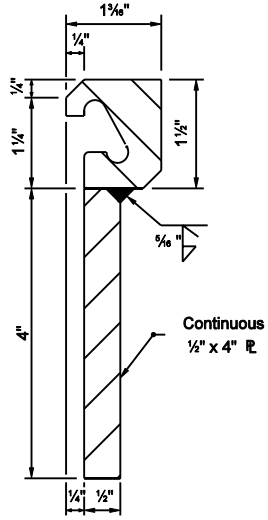

EXTRUSION & PLATE
ASSEMBLY DETAIL

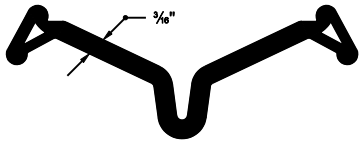

STRIP SEAL

INDIANA DEPARTMENT OF TRANSPORTATION

EXPANSION JOINTS
CLASS SS (ALTERNATE B)

SEPTEMBER 2003

STANDARD DRAWING NO. E 724-BSSJ -02

RICHARD L. VanCLEAVE REGISTERED No. 9750 STATE OF INDIANA PROFESSIONAL ENGINEER
DESIGN STANDARDS ENGINEER

/s/ Richard L. VanCleave 9-02-03
DESIGN STANDARDS ENGINEER DATE

/s/ Richard K. Smutzer 9-02-03
CHIEF HIGHWAY ENGINEER DATE

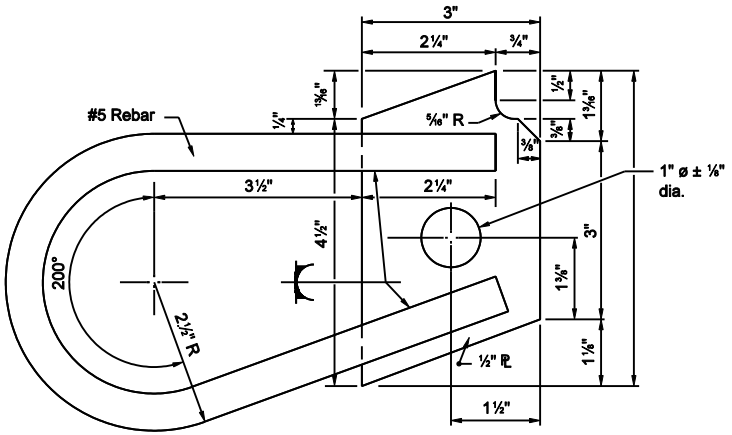

ANCHOR PLATE ALTERNATE C-1

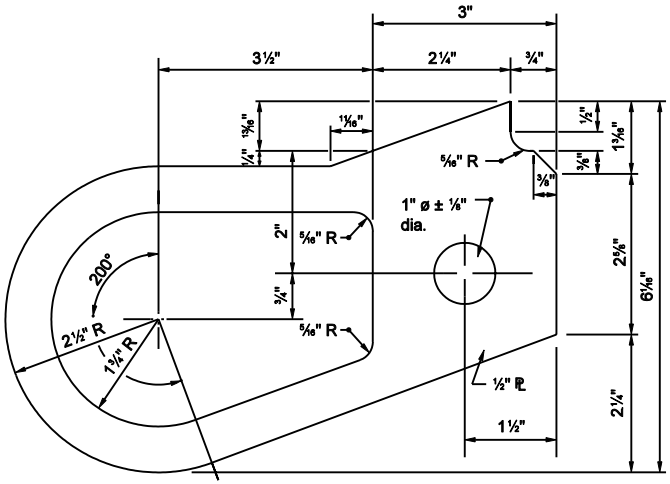

ANCHOR PLATE ALTERNATE C-2

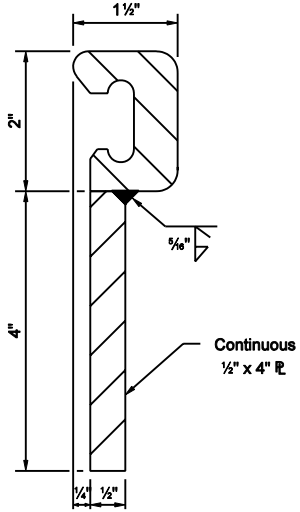

EXTRUSION & PLATE
ASSEMBLY DETAIL

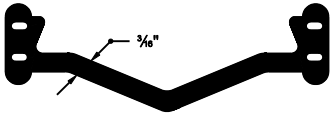

STRIP SEAL

INDIANA DEPARTMENT OF TRANSPORTATION

EXPANSION JOINTS
CLASS SS (ALTERNATE C)

SEPTEMBER 2003

STANDARD DRAWING NO. E 724-BSSJ-03

RICHARD L. VanCLEAVE REGISTERED No. 9750 STATE OF INDIANA PROFESSIONAL ENGINEER

DESIGN STANDARDS ENGINEER

/s/ Richard L. VanCleave 9-02-03
DESIGN STANDARDS ENGINEER DATE

/s/ Richard K. Smutzer 9-02-03
CHIEF HIGHWAY ENGINEER DATE

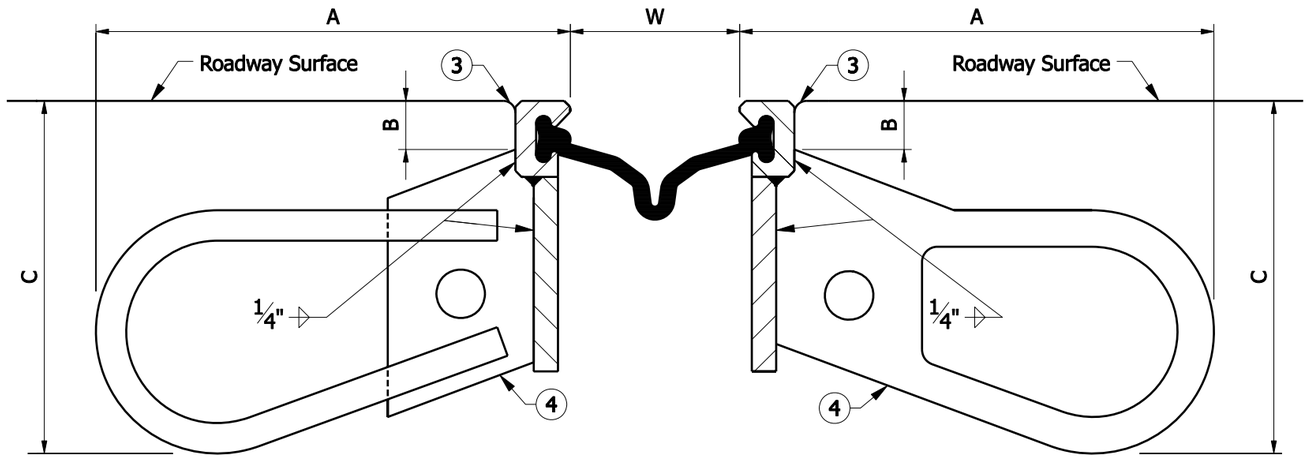

INSTALLATION DETAIL

GENERAL NOTES

1. This sheet shall be used in conjunction with Standard Drawing Nos. E 724-BSSJ-05 through 09.
2. Allowable expansion lengths shall not be increased for skewed structures.

(3) Tool concrete edges to 1/4" to 3/8" radius.

(4) Anchors shall be spaced at 9 in.

DIMENSIONS			
ALTERNATES	A	B	C
A-1	9 3/4"	1"	7 1/4"
A-2			
B-1	9 3/4"	15/16"	7 1/8"
B-2			
C-1	9 3/4"	1 13/16"	7 1/4"
C-2			
D-1	9 3/4"	1"	7 5/16"
D-2			

JOINT SETTING TABLE			
Ambient Temperature °F	DIMENSION "W" Expansion Length		
	100'-200'	200'-300'	300'-400'
120°	2 1/8"	1 5/16"	1/2"
100°	2 7/8"	1 3/4"	1 1/8"
80°	2 11/16"	2 3/16"	1 11/16"
60°	3"	2 5/8"	2 1/4"
40°	3 5/16"	3 1/16"	2 13/16"
20°	3 9/16"	3 1/2"	3 3/8"
0°	3 7/8"	3 5/16"	4"

INDIANA DEPARTMENT OF TRANSPORTATION

EXPANSION JOINTS CLASS SS

SEPTEMBER 2007

STANDARD DRAWING NO. E 724-BSSJ-04

RICHARD L. VanCLEAVE REGISTERED No. 9750 STATE OF INDIANA PROFESSIONAL ENGINEER

DESIGN STANDARDS ENGINEER

/s/ Richard L. VanCleave 09/04/07
DESIGN STANDARDS ENGINEER — DATE

/s/ Mark A. Miller 09/04/07
CHIEF HIGHWAY ENGINEER — DATE

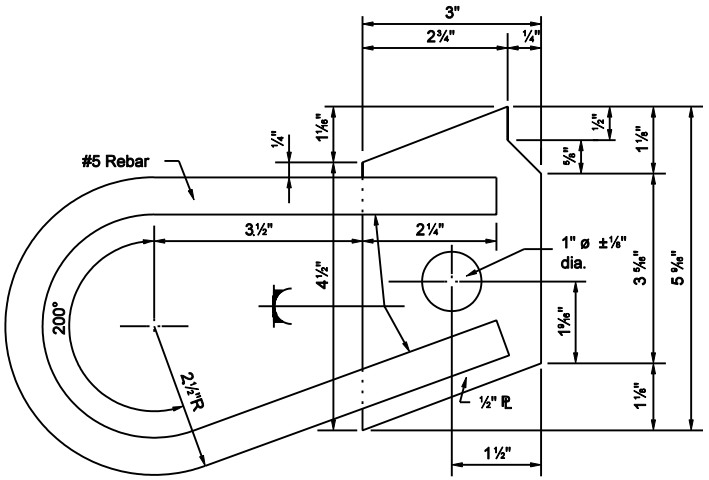

ANCHOR PLATE ALTERNATE D-1

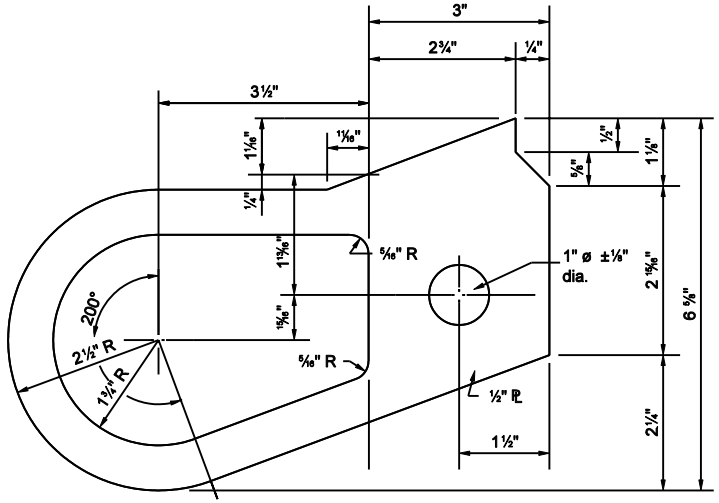

ANCHOR PLATE ALTERNATE D-2

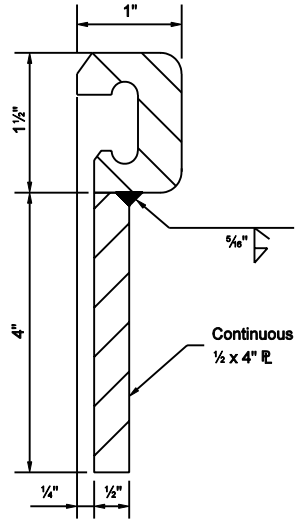

EXTRUSION & PLATE
ASSEMBLY DETAIL

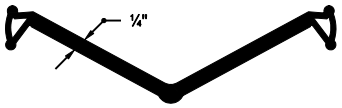

RJ-400 STRIP
SEAL GLAND

INDIANA DEPARTMENT OF TRANSPORTATION

EXPANSION JOINTS
CLASS SS (ALTERNATE D)

SEPTEMBER 2003

STANDARD DRAWING NO. E 724-BSSJ-04A

RICHARD L. VanCLEAVE REGISTERED No. 9750 STATE OF INDIANA PROFESSIONAL ENGINEER

DESIGN STANDARDS ENGINEER

/s/ Richard L. VanCleave 9-02-03
DESIGN STANDARDS ENGINEER DATE

/s/ Richard K. Smutzer 9-02-03
CHIEF HIGHWAY ENGINEER DATE

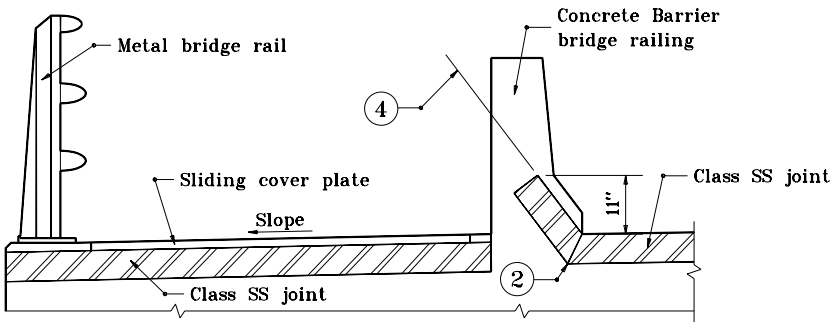

SECTION D–D

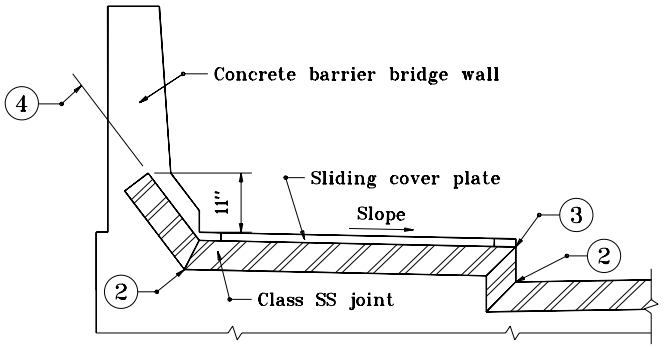

SECTION B–B

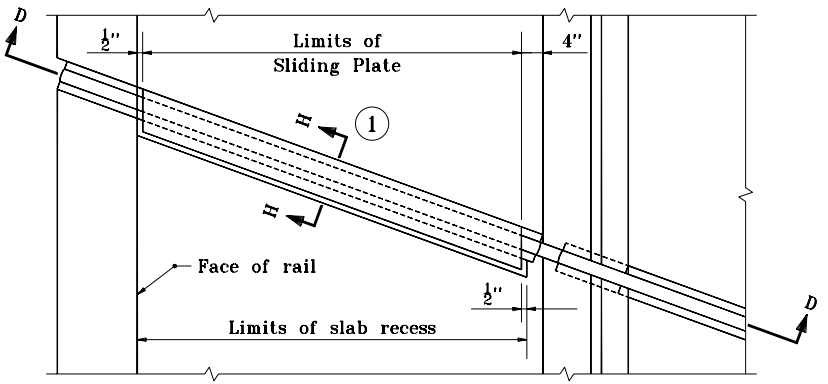

PLAN

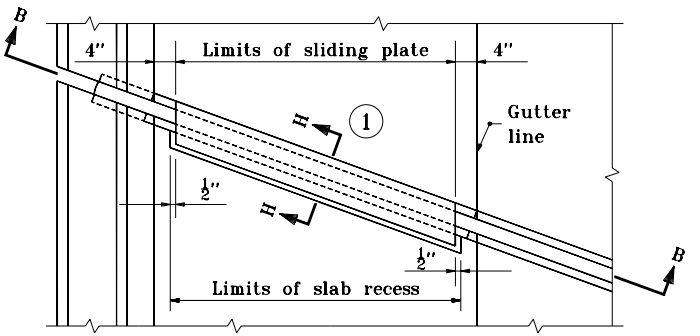

PLAN

SIDEWALKS

(1) For section H–H see sheet number E 724-BSSJ-08.

(2) The extrusion and plate assemblies with anchors shall be miter cut and shop spliced at this location. A miter cut, vulcanized shop splice will be require in the strip seal at this location.

(3) The extrusion and plate assemblies with anchors shall be shop prepared for field welding at this location. A miter cut vulcanized shop splice will be require in the strip seal at this location.

(4) The joint shall be placed parallel to the lower sloped face of the rail with a maximum 3 in. depth to the top of the extrusion.

INDIANA DEPARTMENT OF TRANSPORTATION

EXPANSION JOINTS CLASS SS

SEPTEMBER 1994

STANDARD DRAWING NO. **E 724-BSSJ-05**

ANTHONY L. UREMOVICH REGISTERED No. 18095 STATE OF INDIANA PROFESSIONAL ENGINEER

DESIGN STANDARDS ENGINEER

DETAILS PLACED IN THIS FORMAT	11-15-99
/s/ Anthony L. Uremovich DESIGN STANDARDS ENGINEER	11-15-99 DATE
/s/ Firooz Zandi CHIEF HIGHWAY ENGINEER	11-15-99 DATE
ORIGINALLY APPROVED	9-30-94

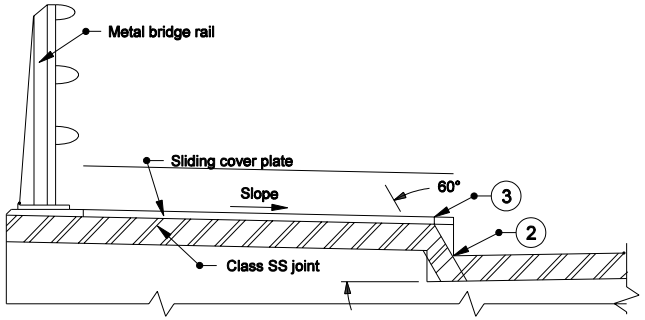

SECTION C-C

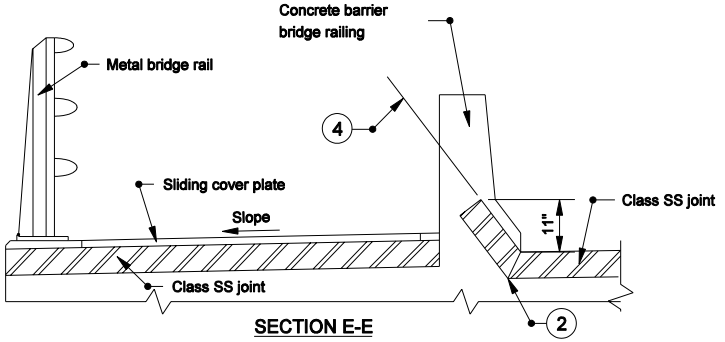

SECTION E-E

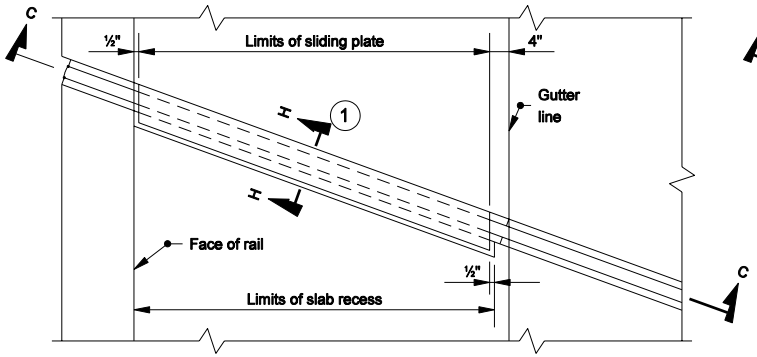

PLAN

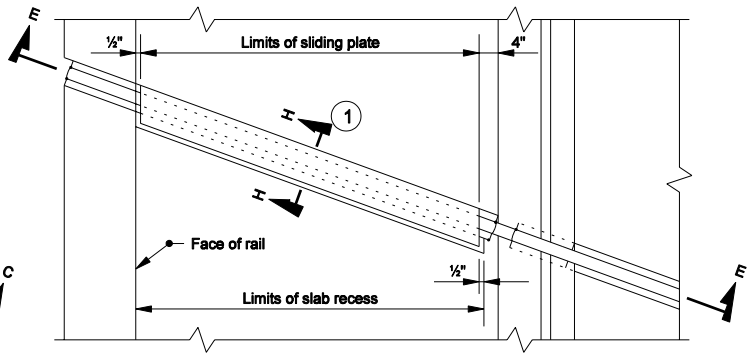

PLAN

SIDEWALKS

(1) For section H-H see sheet number E 724-BSSJ-08.

(2) The extrusion and plate assemblies with anchors shall be miter cut and shop spliced at this location. A miter cut, vulcanized shop splice will be required in the strip seal at this location.

(3) The extrusion and plate assemblies with anchors shall be shop prepared for field welding at this location. A miter cut vulcanized shop splice will be required in the strip seal at this location.

(4) The joint shall be placed parallel to the lower sloped face of the rail with a maximum 3 in. depth to the top of the extrusion.

INDIANA DEPARTMENT OF TRANSPORTATION

EXPANSION JOINTS
CLASS SS

MARCH 2005

STANDARD DRAWING NO. E 724-BSSJ-06

RICHARD L. VanCLEAVE REGISTERED No. 9750 STATE OF INDIANA PROFESSIONAL ENGINEER

DESIGN STANDARDS ENGINEER

/s/ Richard L. VanCleave 3-01-05
DESIGN STANDARDS ENGINEER DATE

/s/ Richard K. Smutzer 3-01-05
CHIEF HIGHWAY ENGINEER DATE

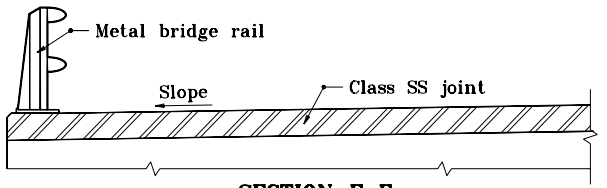

SECTION F-F

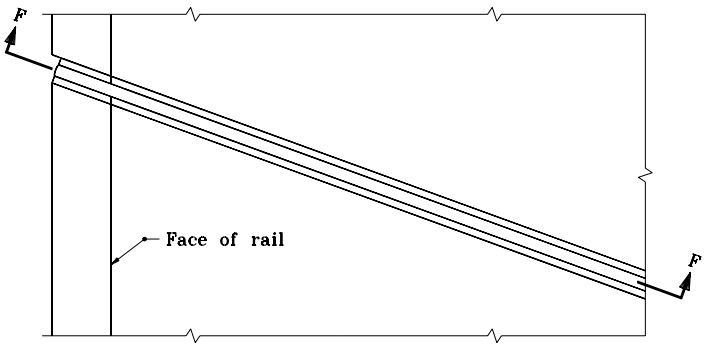

PLAN

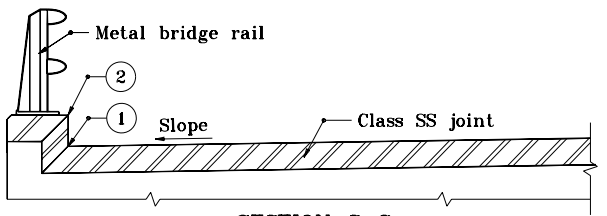

SECTION G-G

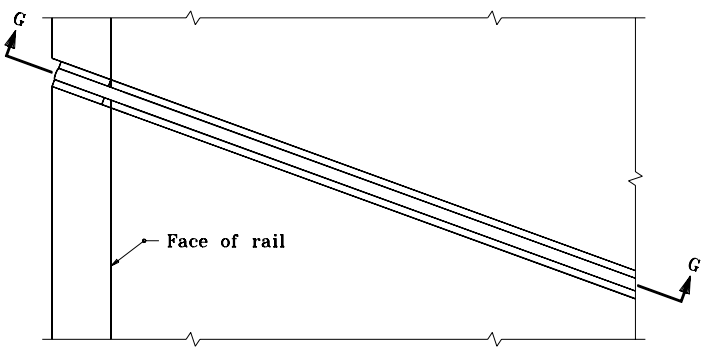

PLAN

METAL RAILING WITHOUT SIDEWALK

(1) The extrusion and plate assemblies with anchors shall be miter cut and shop spliced at this location. A miter cut, vulcanized shop spliced will be required in the strip seal at the location.

(2) The extrusion and plate assemblies with anchors shall be shop prepared for field welding at this location. A miter cut, vulcanized shop splice will be required in the strip seal at this location.

INDIANA DEPARTMENT OF TRANSPORTATION

EXPANSION JOINTS CLASS SS

SEPTEMBER 1994

STANDARD DRAWING NO. **E 724-BSSJ-07**

ANTHONY L. UREMOVICH REGISTERED No. 18095 STATE OF INDIANA PROFESSIONAL ENGINEER

DESIGN STANDARDS ENGINEER

DETAILS PLACED IN THIS FORMAT 11-15-99

/s/ Anthony L. Uremovich 11-15-99
DESIGN STANDARDS ENGINEER DATE

/s/ Firooz Zandi 11-15-99
CHIEF HIGHWAY ENGINEER DATE

ORIGINALLY APPROVED 9-30-94

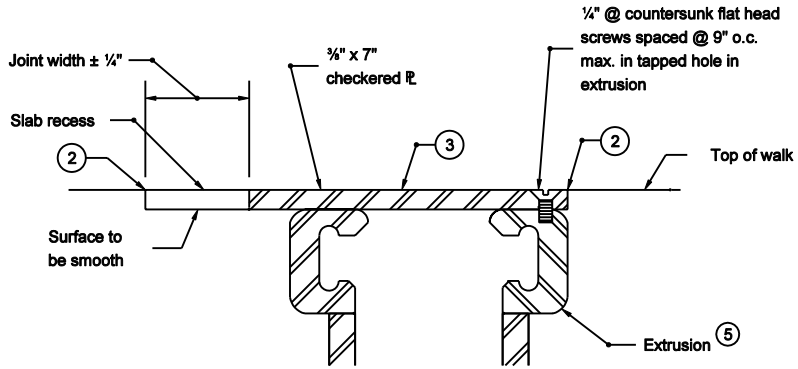

SECTION H-H

SLIDING COVER PLATE DETAIL

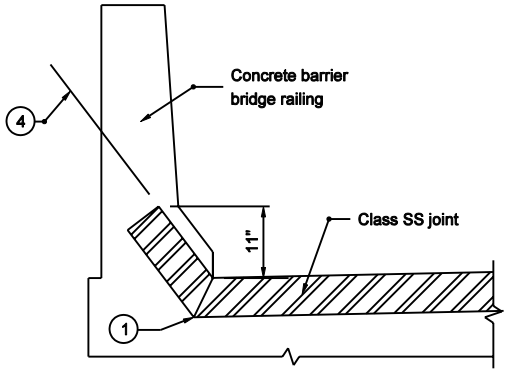

SECTION A-A

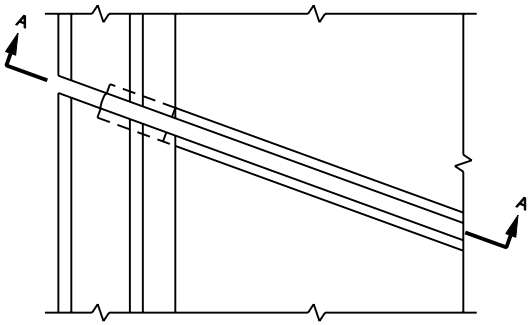

PLAN

CONCRETE BARRIER BRIDGE RAILING

(1) The extrusion and plate assemblies with anchors shall be miter cut and shop spliced at this location. A miter cut, vulcanized shop splice will be required in the strip seal at this location.

(2) Tool concrete edges to ¼" to ⅜" radius.

(3) The length of the sliding cover plate, measured along the centerline of the Class SS Joint, shall be ⅜" shorter at each end than the limits of the recess as shown on these details.

(4) The joint shall be placed parallel to the lower sloped face of the rail with a maximum 3 " depth to the top of the extrusion.

(5) See Standard Drawings E 724-BSSJ-03 and -04 for details.

INDIANA DEPARTMENT OF TRANSPORTATION

EXPANSION JOINTS
CLASS SS

SEPTEMBER 2003

STANDARD DRAWING NO. E 724-BSSJ-08

RICHARD L. VANCLEAVE REGISTERED No. 9750 STATE OF INDIANA PROFESSIONAL ENGINEER

DESIGN STANDARDS ENGINEER

/s/ Richard L. VanCleave 9-02-03
DESIGN STANDARDS ENGINEER DATE

/s/ Richard K. Smutzer 9-02-03
CHIEF HIGHWAY ENGINEER DATE

GENERAL NOTES

1. Standard Drawing Nos. E 724-BSSJ-05 through 09 shall be used in conjunction with Standard Drawing Nos. E 724-BSSJ-01 through 04.

2. The details shown on Standard Drawing Nos. E 724-BSSJ-05 through 09 are the only approved methods of placing Class SS Joints in curbs, sidewalks, concrete bridge railing and under metal bridge railing.

3. The locations of the anchor plates in sidewalks and in the concrete barrier bridge rail shall be as shown on the approved shop drawings but in no case shall the spacing exceed 9 in.

INDIANA DEPARTMENT OF TRANSPORTATION

EXPANSION JOINTS CLASS SS

SEPTEMBER 1994

STANDARD DRAWING NO. **E 724-BSSJ-09**

ANTHONY L. UREMOVICH REGISTERED No. 18095 STATE OF INDIANA PROFESSIONAL ENGINEER

DESIGN STANDARDS ENGINEER

DETAILS PLACED IN THIS FORMAT	11-15-99
/s/ Anthony L. Uremovich DESIGN STANDARDS ENGINEER	11-15-99 DATE
/s/ Firooz Zandi CHIEF HIGHWAY ENGINEER	11-15-99 DATE
ORIGINALLY APPROVED	9-30-94

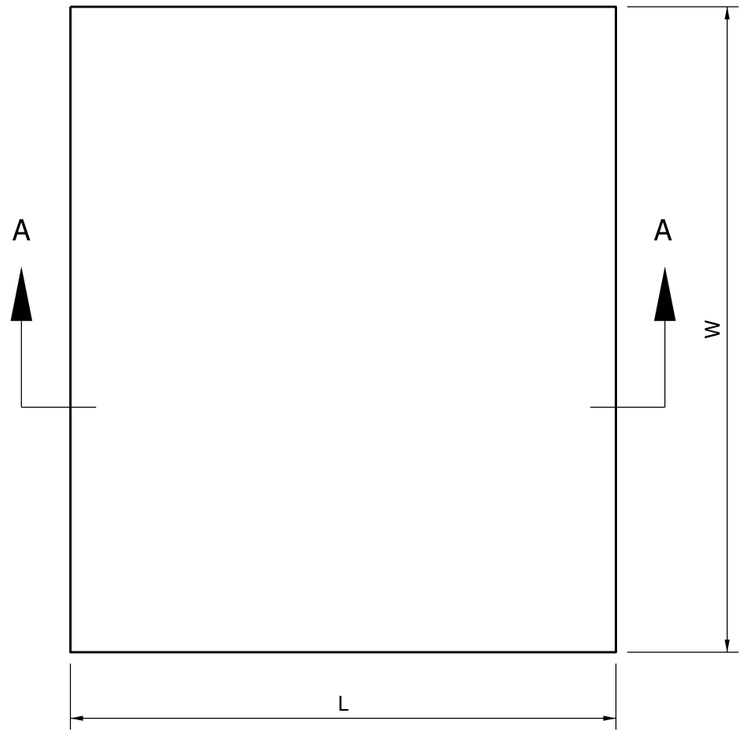

ELASTOMERIC BEARING PAD

PLAN

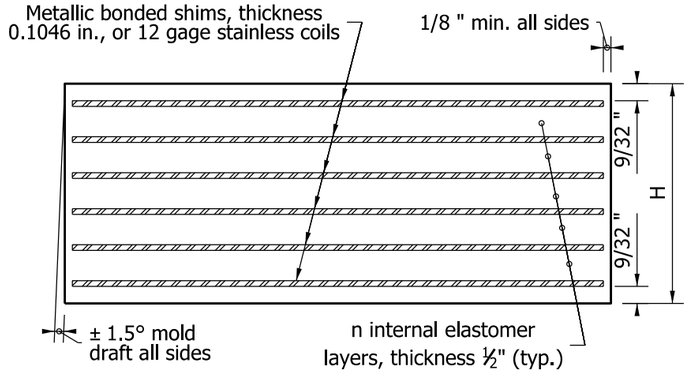

SECTION A - A

NOTES:

1. The rectangular Elastomeric Bearing Pad shall be placed with L dimension parallel to longitudinal bridge axis.

2. h_{rt} is defined as the summation of all internal elastomer thickness plus the two external layers thickness.

TABLE OF DIMENSIONS

Bearing Designation	Bearing Width W	Bearing Length L	Number of Internal Elastomer Layers n	h_{rt}	Number of Steel Shims n_s	Bearing Total Thickness H
TYPE 1	14"	10 ½"	3	2 1/16"	4	2 15/32"
TYPE 2	14"	11 ½"	4	2 9/16"	5	3 3/32"
TYPE 3	18"	11"	4	2 9/16"	5	3 3/32"
TYPE 4	24"	12"	5	3 1/16"	6	3 11/16"
TYPE 5A	22"	11"	4	2 9/16"	5	3 3/32"
TYPE 6A	22"	10"	4	2 9/16"	5	3 3/32"
TYPE 7A	22"	9"	3	2 1/16"	4	2 15/32"
TYPE 5B	12"	12"	4	2 9/16"	5	3 3/32"
TYPE 6B	12"	11"	4	2 9/16"	5	3 3/32"
TYPE 7B	12"	10"	3	2 1/16"	4	2 15/32"

INDIANA DEPARTMENT OF TRANSPORTATION

BRIDGE ELASTOMERIC BEARING PADS TYPE 1 to 7 FOR PRESTRESSED I-BEAMS & BOX BEAMS

SEPTEMBER 2009

STANDARD DRAWING NO. E 726-BEBP-01

RICHARD L. VanCLEAVE REGISTERED No. 9750 STATE OF INDIANA PROFESSIONAL ENGINEER

DESIGN STANDARDS ENGINEER

/s/ Richard L.VanCleave 09/01/09
DESIGN STANDARDS ENGINEER DATE

/s/ Mark A. Miller 09/01/09
CHIEF HIGHWAY ENGINEER DATE

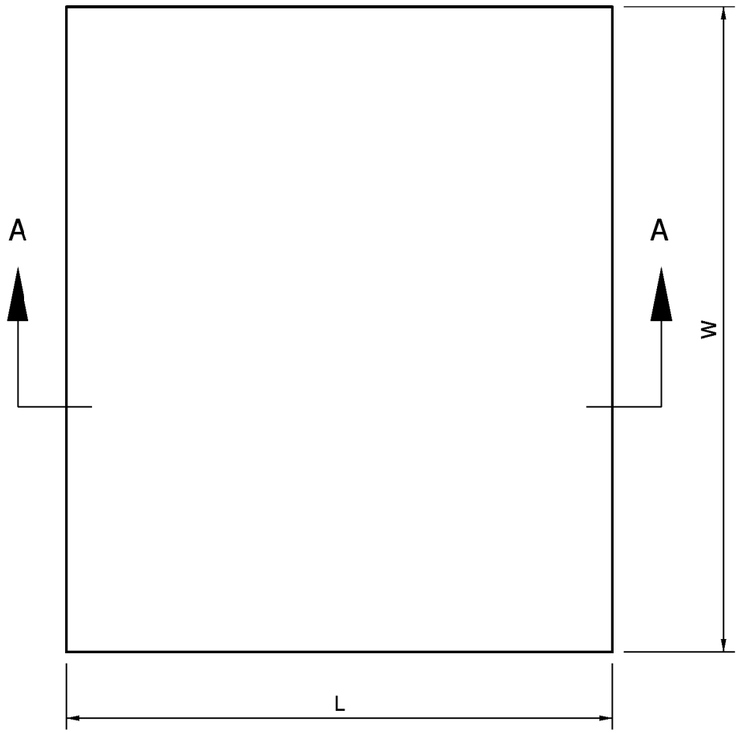

ELASTOMERIC BEARING PAD

PLAN

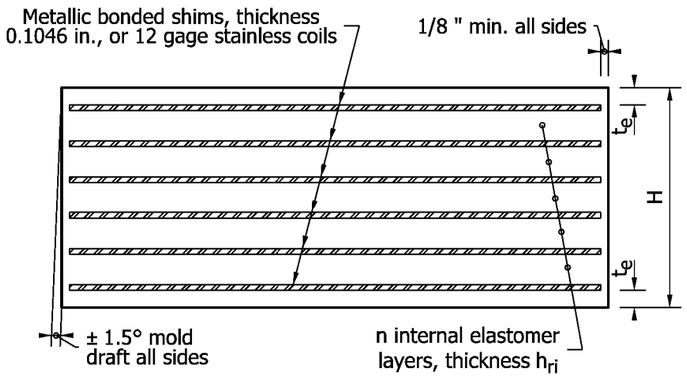

SECTION A - A

NOTES:

1. The rectangular Elastomeric Bearing Pad shall be placed with L dimension parallel to longitudinal bridge axis.
2. h_{rt} is defined as the summation of all internal elastomer thickness plus the two external layers thickness.

TABLE OF DIMENSIONS

Bearing Designation	Bearing Width W	Bearing Length L	Internal Elastomer Thickness h_{ri}	Number of Internal Elastomer Layers n	External Elastomer Thickness t_e	h_{rt}	Number of Steel Shims n_s	Bearing Total Thickness H
T1	23"	12"	½"	5	9/32"	3 1/16"	6	3 11/16"
T2	23"	14"	½"	6	9/32"	3 9/16"	7	4 5/16"
T3	23"	17"	19/32"	7	5/16"	4 25/32"	8	5 5/8"
T4	24"	19"	19/32"	8	5/16"	5 3/8"	9	6 5/16"

INDIANA DEPARTMENT OF TRANSPORTATION

BRIDGE ELASTOMERIC BEARING PADS TYPE T-1 to T-4 FOR PRESTRESSED BULB-TEE BEAMS SEPTEMBER 2009

STANDARD DRAWING NO. E 726-BEBP-02

RICHARD L. VanCLEAVE REGISTERED No. 9750 STATE OF INDIANA PROFESSIONAL ENGINEER

DESIGN STANDARDS ENGINEER

/s/ Richard L. VanCleave 09/01/09
DESIGN STANDARDS ENGINEER DATE

/s/ Mark A. Miller 09/01/09
CHIEF HIGHWAY ENGINEER DATE

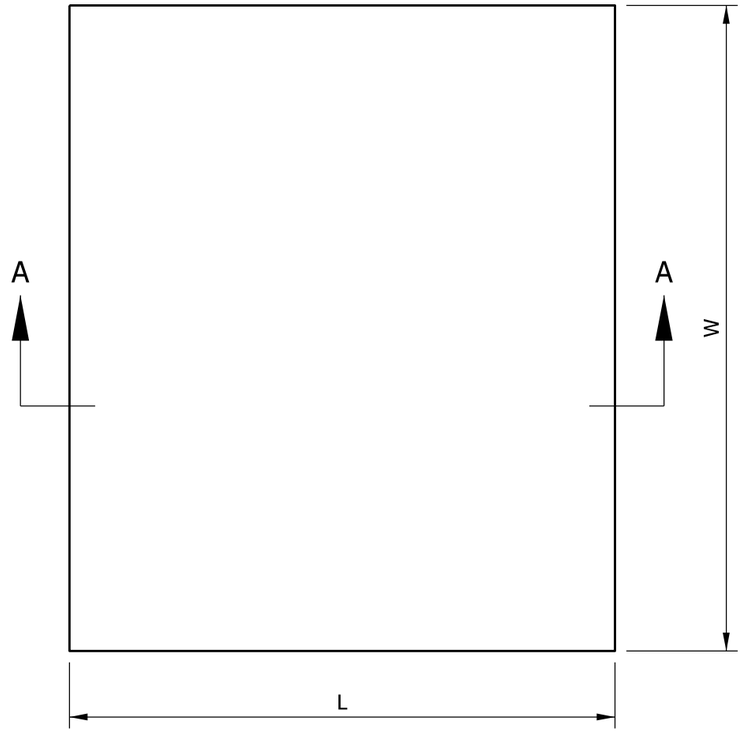

ELASTOMERIC BEARING PAD
PLAN

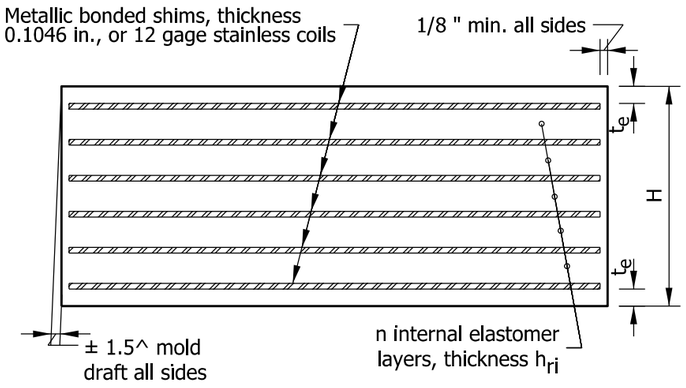

SECTION A - A

NOTES:

1. The rectangular Elastomeric Bearing Pad shall be placed with L dimension parallel to longitudinal bridge axis.
2. h_{rt} is defined as the summation of all internal elastomer thickness plus the two external layers thickness.
3. The Contractor shall check that the bearing seat is level. Grinding may be required to obtain a level seat.
4. The bridge seat shall be finished level at the time concrete is placed. Finished concrete shall be ground if necessary to ensure full and level contact between the seat and the bearing pads when the beams are set.

TABLE OF DIMENSIONS

Bearing Designation	Bearing Width W	Bearing Length L	Internal Elastomer Thickness h_{ri}	Number of Internal Elastomer Layers n	External Elastomer Thickness t_e	h_{rt}	Number of Steel Shims n_s	Bearing Total Thickness H
TH1	36"	12"	1/2"	5	9/32"	3 1/16"	6	3 11/16"
TH2	36"	14"	1/2"	6	9/32"	3 9/16"	7	4 5/16"
TH3	36"	17"	19/32"	7	5/16"	4 25/32"	8	5 5/8"
TH4	36"	19"	19/32"	8	5/16"	5 3/8"	9	6 5/16"

INDIANA DEPARTMENT OF TRANSPORTATION

BRIDGE ELASTOMERIC BEARING PADS TYPE TH1 - TH4 FOR PRESTRESSED WIDE-FLANGE BULB-TEE BEAMS

SEPTEMBER 2012

STANDARD DRAWING NO. E 726-BEBP-03

RICHARD L. VanCLEAVE REGISTERED No. 9750 STATE OF INDIANA PROFESSIONAL ENGINEER

/s/ Richard L. VanCleave 09/04/12
SUPERVISOR, ROADWAY STANDARDS DATE

/s/ Mark A. Miller 09/04/12
CHIEF ENGINEER DATE

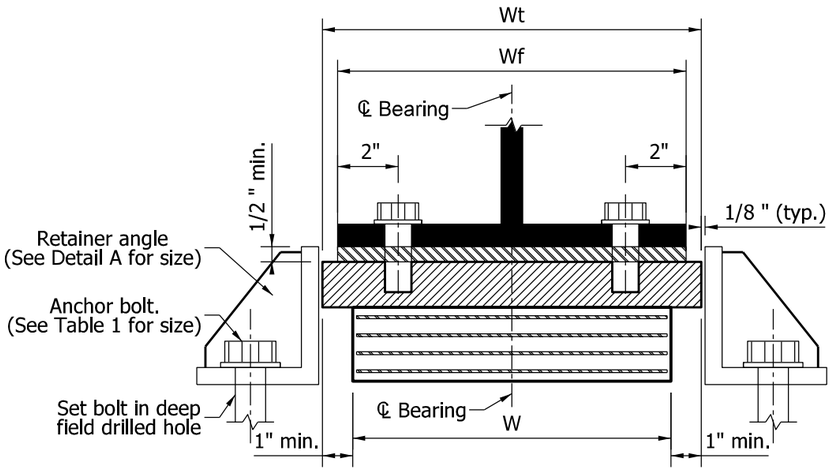

CROSS SECTION THROUGH ASSEMBLY

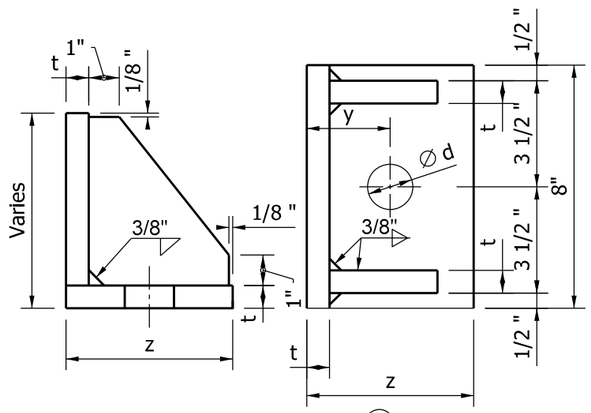

DETAIL A ③

NOTES:

1. The bearing plate size shall be calculated as follows:
   Lt = L + 1" Wt = Wf + 2" or Wt = W + 2" whichever is greater.
2. The shim thickness is 0.1046 in., which corresponds to 12 gage stainless coils.
3. Equivalent rolled angle shape with stiffeners may be used in lieu of welded plates.
4. Minimum dimension required is 1 1/2 " + flange thickness + 1/3" (for shim plate).
5. Minimum thickness 1 1/2"
6. See standard drawing E 726-BEBP-05 for Table of Dimensions.

TABLE 1

ANCHOR BOLT SIZE		
BEARING SIZE		BOLT SIZE
S1	11" x 8"	1" x 12"
S2	12" x 9"	1" x 12"
S3	13" x 10"	1" x 12"
S4	15" x 11"	1 1/4" x 15"
S5	16" x 12"	1 1/4" x 15"
S6	20" x 13"	1 1/2" x 18"
S7	20" x 15"	1 1/2" x 18"

TABLE 2

BOLT DIA.	y	z	t	d
1"	2 1/8"	4"	1/2"	1 1/8"
1 1/4"	2 1/4"	4 3/4"	1/2"	1 3/8"
1 1/2"	2 3/4"	5 1/2"	3/4"	1 5/8"

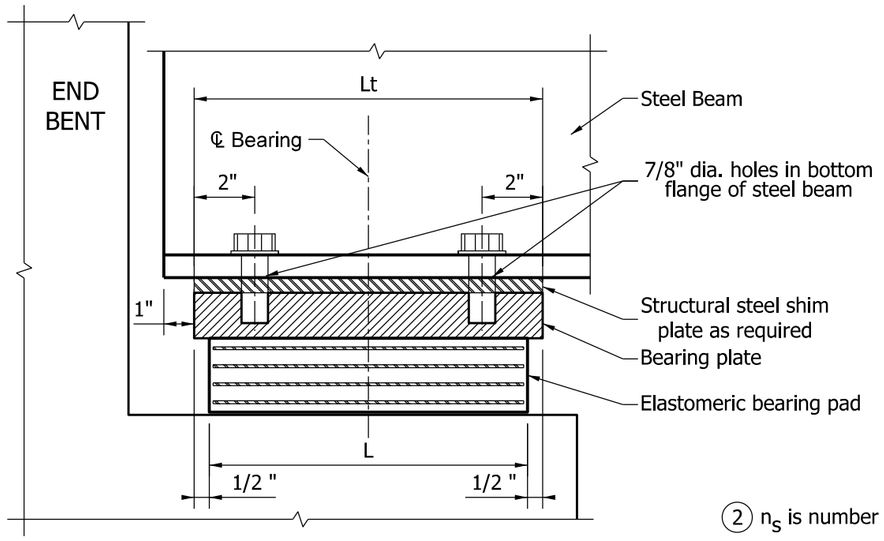

LONGITUDINAL SECTION THROUGH ASSEMBLY

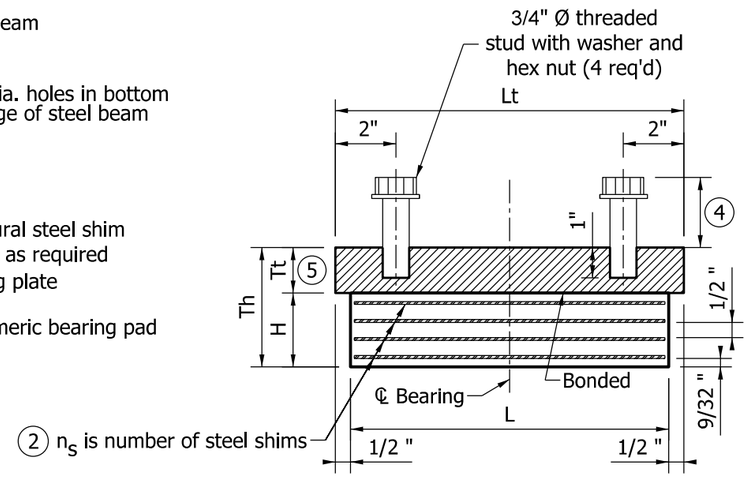

BEARING ASSEMBLY

INDIANA DEPARTMENT OF TRANSPORTATION

BRIDGE ELASTOMERIC BEARING PADS
TYPE S - FOR STEEL BEAMS

SEPTEMBER 2012

STANDARD DRAWING NO. E 726-BEBP-04

RICHARD L. VanCLEAVE REGISTERED No. 9750 STATE OF INDIANA PROFESSIONAL ENGINEER

/s/ Richard L. VanCleave 09/04/12
SUPERVISOR, ROADWAY STANDARDS DATE

/s/ Mark A. Miller 09/04/12
CHIEF ENGINEER DATE

TABLE OF DIMENSIONS - TYPE S BEARINGS FOR STEEL BEAMS

Bearing Designation	Bearing Width W	Bearing Length L	Number of Internal Elastomer Layers n	hrt (1)	Number of Steel Shims ns	Bearing Total Thickness H
S1-A	11"	8"	2	1 9/16"	3	1 27/32"
S1-B	11"	8"	3	2 1/16"	4	2 7/16"
S2-A	12"	9"	2	1 9/16"	3	1 27/32"
S2-B	12"	9"	3	2 1/16"	4	2 7/16"
S3-A	13"	10"	3	2 1/16"	4	2 7/16"
S3-B	13"	10"	4	2 9/16"	5	3 1/32"
S4-A	15"	11"	4	2 9/16"	5	3 1/32"
S4-B	15"	11"	5	3 1/16"	6	3 5/8"
S5-A	16"	12"	4	2 9/16"	5	3 1/32"
S5-B	16"	12"	5	3 1/16"	6	3 5/8"
S6-A	20"	13"	5	3 1/16"	6	3 5/8"
S6-B	20"	13"	6	3 9/16"	7	4 7/32"
S7-A	20"	15"	6	3 9/16"	7	4 7/32"
S7-B	20"	15"	7	4 1/16"	8	4 13/16"

NOTES

(1) h_{rt} is defined as the summation of all internal elastomer thicknesses plus the external elastomer thicknesses.

2. See Standard Drawing E 726-BEBP-04 for Type S bearing assembly details.

INDIANA DEPARTMENT OF TRANSPORTATION

ELASTOMERIC BEARING PADS
TYPE S

SEPTEMBER 2012

STANDARD DRAWING NO. E 726-BEBP-05

RICHARD L. VanCLEAVE REGISTERED No. 9750 STATE OF INDIANA PROFESSIONAL ENGINEER

/s/ Richard L. VanCleave 09/04/12
SUPERVISOR, ROADWAY STANDARDS DATE

/s/ Mark A. Miller 09/04/12
CHIEF ENGINEER DATE

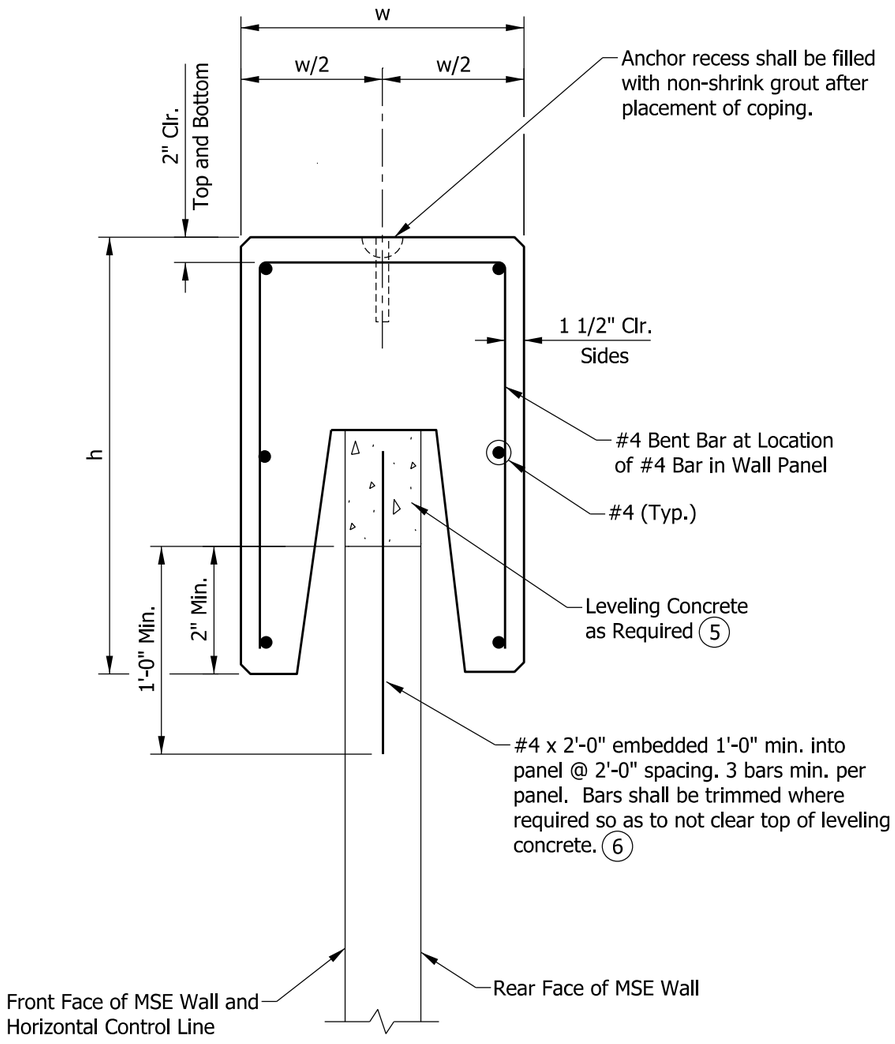

TYPICAL SECTION

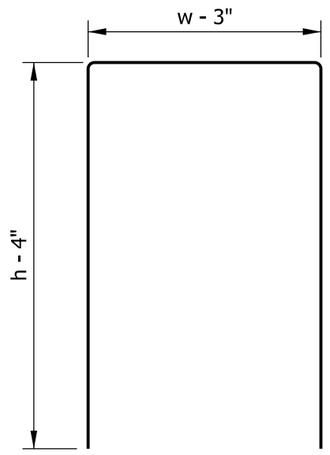

#4 BENT BAR

NOTES:

1. Precast coping unit length shall be 10'-0".
2. Reinforcing bar size, length, and spacing shall be determined by the manufacturer.
3. All chamfered edges shall be 3/4".
4. See Standard Drawing E 703-BRST-01 for reinforcing-bar bending details and notes.

(5) Leveling concrete is required when adjacent top panels do not provide a continuous surface on which to place the precast coping, e.g., stepped panels or rectangular panels on a sloping grade. Leveling concrete is not required when custom top panels provide a surface parallel to the finished grade.

(6) Use only when leveling concrete is required.

INDIANA DEPARTMENT OF TRANSPORTATION

MSE WALL
PRECAST CONCRETE COPING

SEPTEMBER 2013

STANDARD DRAWING NO. E 731-MSEW-01

ELIZABETH W. PHILLIPS
REGISTERED
No. 10200124
STATE OF INDIANA
PROFESSIONAL ENGINEER

/s/ Elizabeth W. Phillips 02/22/13
DESIGN STANDARDS ENGINEER DATE

/s/ Mark A. Miller 03/27/13
CHIEF ENGINEER DATE

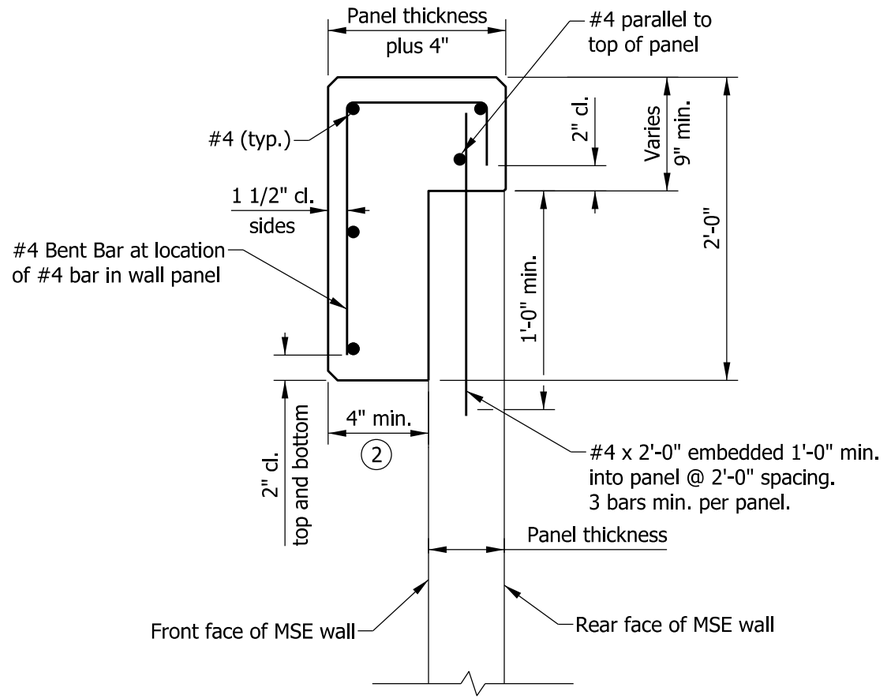

TYPICAL SECTION

NOTES

1. Coping joints shall coincide approximately with the panel joints. Reinforcing bars' ends shall be 2" short of near side of each joint.
2. The front face of a cast-in-place coping shall match the front face of a precast coping where used in conjunction.
3. All chamfered edges shall be 3/4".
4. See Standard Drawing E 703-BRST-01 for reinforcing-bar bending details and notes.

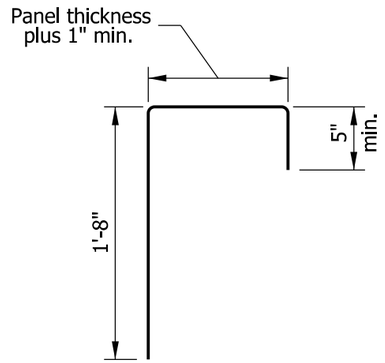

#4 BENT BAR

INDIANA DEPARTMENT OF TRANSPORTATION

MSE WALL
CAST-IN-PLACE CONCRETE COPING

SEPTEMBER 2012

STANDARD DRAWING NO. E 731-MSEW-02

RICHARD L. VanCLEAVE
REGISTERED
No. 9750
STATE OF INDIANA
PROFESSIONAL ENGINEER

/s/ Richard L. VanCleave 09/04/12
SUPERVISOR, ROADWAY STANDARDS DATE

/s/ Mark A. Miller 09/04/12
CHIEF ENGINEER DATE

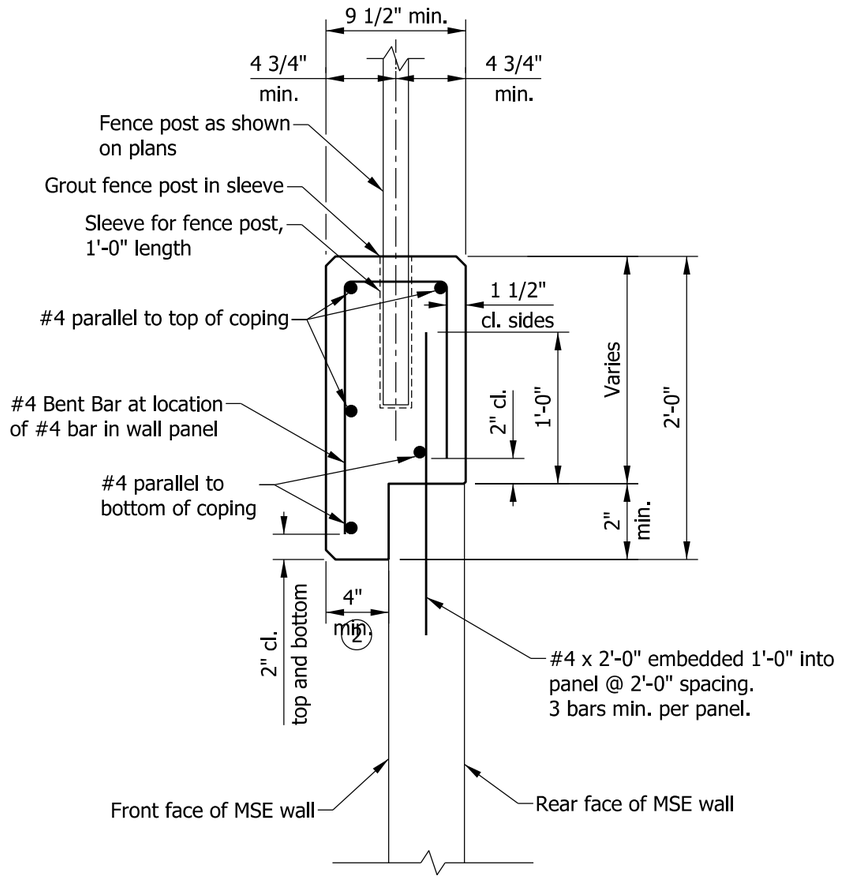

TYPICAL SECTION

NOTES

1. Coping joints shall coincide approximately with the panel joints. Reinforcing bars' ends shall be 2" short of near side of each joint.
2. The front face of a cast-in-place coping shall match the front face of a precast coping where used in conjunction.
3. All chamfered edges shall be 3/4".
4. See Standard Drawing E 703-BRST-01 for reinforcing-bar bending details and notes.

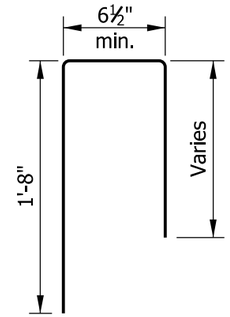

#4 BENT BAR

INDIANA DEPARTMENT OF TRANSPORTATION

MSE WALL
CAST-IN-PLACE CONCRETE COPING
WITH PEDESTRIAN FENCE

SEPTEMBER 2012

STANDARD DRAWING NO. E 731-MSEW-03

RICHARD L. VanCLEAVE REGISTERED No. 9750 STATE OF INDIANA PROFESSIONAL ENGINEER

/s/ Richard L. VanCleave 09/04/12
SUPERVISOR, ROADWAY STANDARDS DATE

/s/ Mark A. Miller 09/04/12
CHIEF ENGINEER DATE

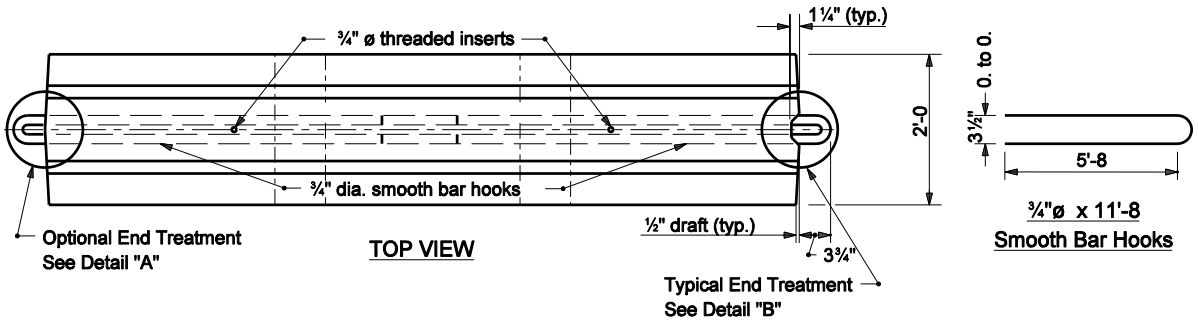

TOP VIEW

¾"ø x 11'-8
Smooth Bar Hooks

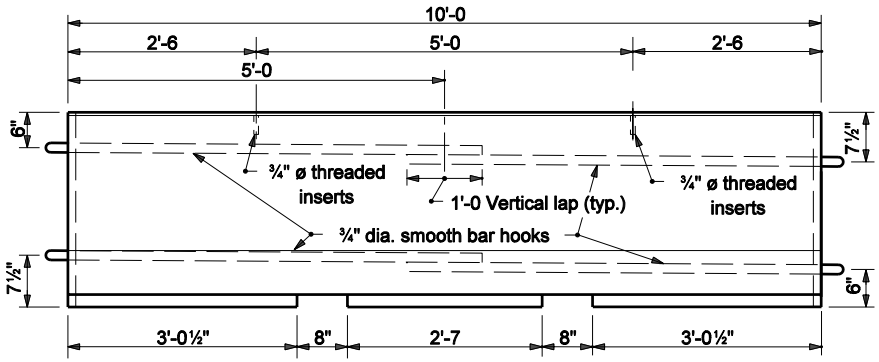

FRONT VIEW

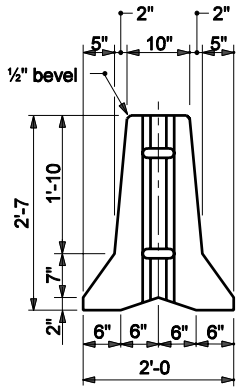

END VIEW

NOTES :

1. The dimensions of the lifting slots are subject to adjustment as necessary to accommodate handling equipment.
2. Maximum barrier taper rate flares for lane closures for legal posted speed are shown in Table No.2.
3. For additional connection details, see Standard Drawing E 801-TCCB-02.

④ Where site conditons prohibit the use of these flare rates then flare rates may range from 10:1 to 6:1

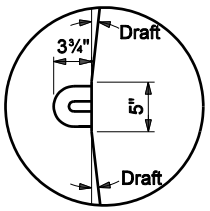

DETAIL "A"

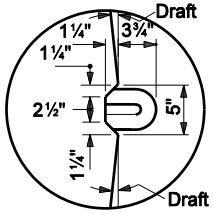

DETAIL "B"

TABLE NO. 2	
CONSTRUCTION ZONE SPEED	④ TAPER FLARE RATE
55 mph	16 : 1
50 mph	14 : 1
45 mph	13 : 1
40 mph	11 : 1
≤ 35 mph	10 : 1

INDIANA DEPARTMENT OF TRANSPORTATION

TEMPORARY CONCRETE BARRIER DIMENSIONS

SEPTEMBER 2004

STANDARD DRAWING NO. E 801-TCCB-01

RICHARD L. VANCLEAVE REGISTERED No. 9750 STATE OF INDIANA PROFESSIONAL ENGINEER

DESIGN STANDARDS ENGINEER

/s/ Richard L. VanCleave 9-01-05
DESIGN STANDARDS ENGINEER DATE

/s/ Richard K. Smutzer 9-01-05
CHIEF HIGHWAY ENGINEER DATE

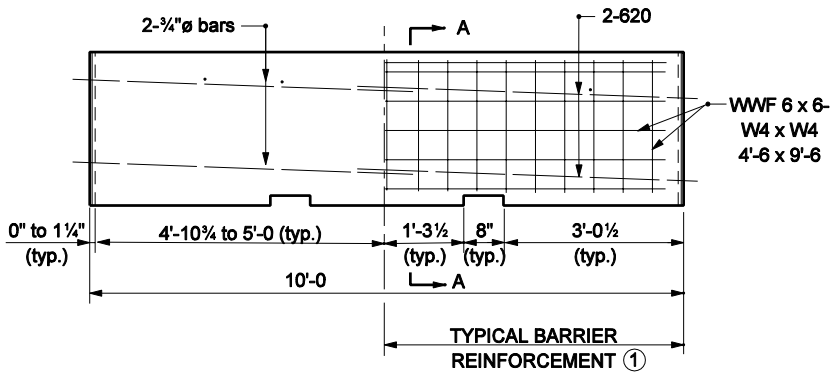

REINFORCEMENT DETAILS

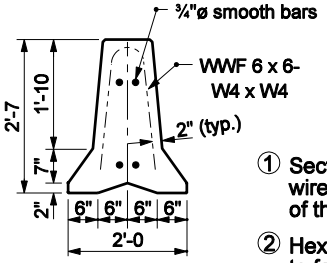

SECTION A-A ①

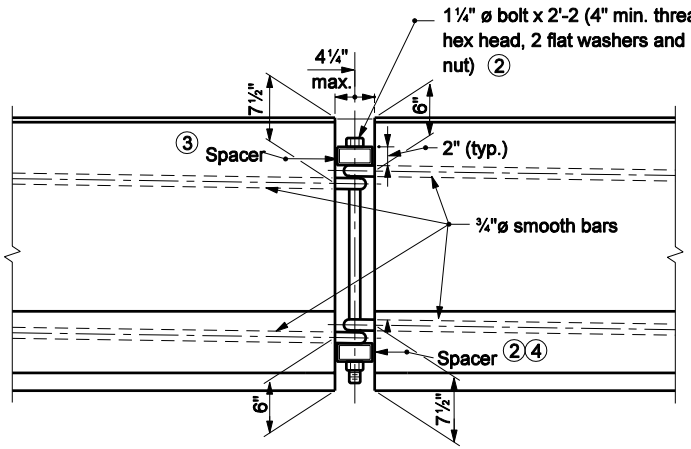

FRONT VIEW

CONNECTION DETAIL

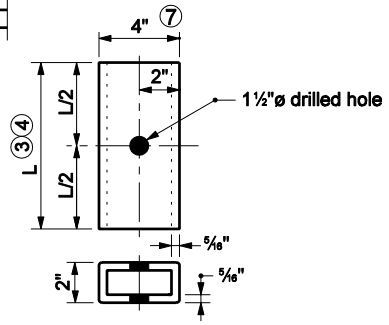

SPACER DETAIL

NOTES :

① Section A-A shows reinforcement with welded wire fabric. The WWF may be bent to the shape of the wall.

② Hex nut may be tack welded to bottom spacer to facilitate installation and removal. Bolts shall be torqued only to tight condition. Clearance between the spacer and the ends of the barrier shall permit angular deflection at the joints to permit flare rate 11 : 1 or flatter.

③ Top spacer TS 4" x 2" x $\frac{5}{16}$" x 10" long

④ Bottom spacer TS 4" x 2" x $\frac{5}{16}$" x 1'-4 long

5 Where necessary to meet short radius curving alignment, the shorter top spacer (10") may be subsituted for the standard bottom spacer (16").

6 For additional connection details see Standard Drawing E 801-TCCB-01.

⑦ Where very short radius curving alignment is encountered, spacers may be TS 3" x 2" x ¼" x the appropriate length as shown above.

⑧ In lieu of the connection detail shown, the J-J Hook temporary barrier connection of Easi-Set Industries as described in FHWA acceptance letter B-52 of March 26, 1999 may be used.

INDIANA DEPARTMENT OF TRANSPORTATION

TEMPORARY CONCRETE BARRIER DETAILS

MARCH 2005

STANDARD DRAWING NO. E 801-TCCB-02

RICHARD L. VanCLEAVE REGISTERED No. 9750 STATE OF INDIANA PROFESSIONAL ENGINEER

DESIGN STANDARDS ENGINEER

/s/ Richard L. VanCleave 3-01-05
DESIGN STANDARDS ENGINEER DATE

/s/ Richard K. Smutzer 3-01-05
CHIEF HIGHWAY ENGINEER DATE

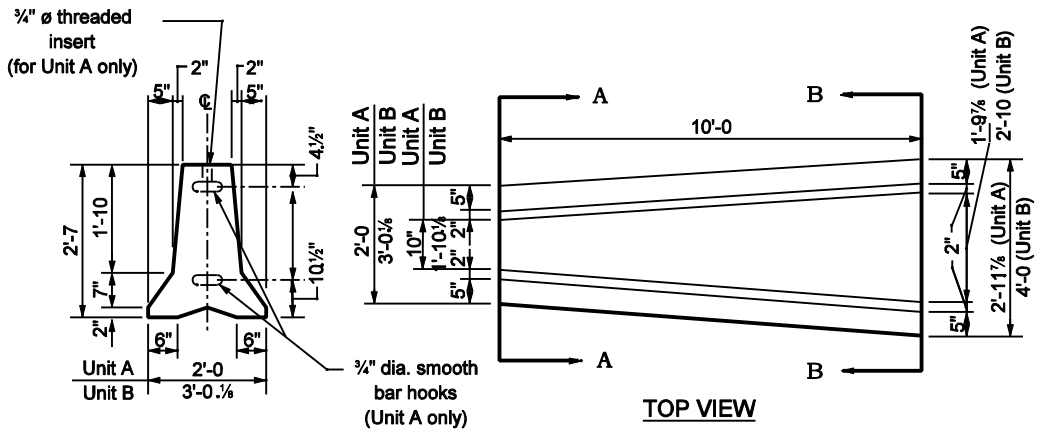

END VIEW A-A

TOP VIEW

Unit A or Unit B

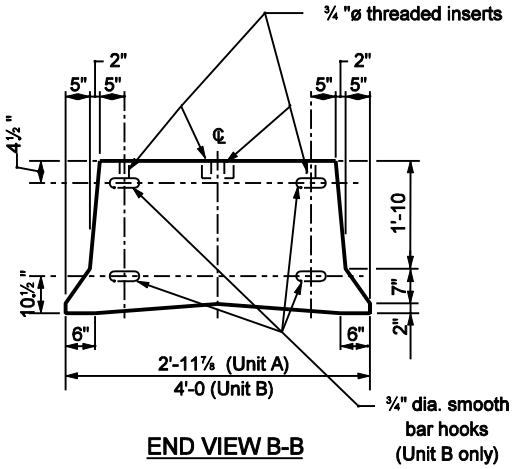

END VIEW B-B

DOUBLE TAPER END SECTION

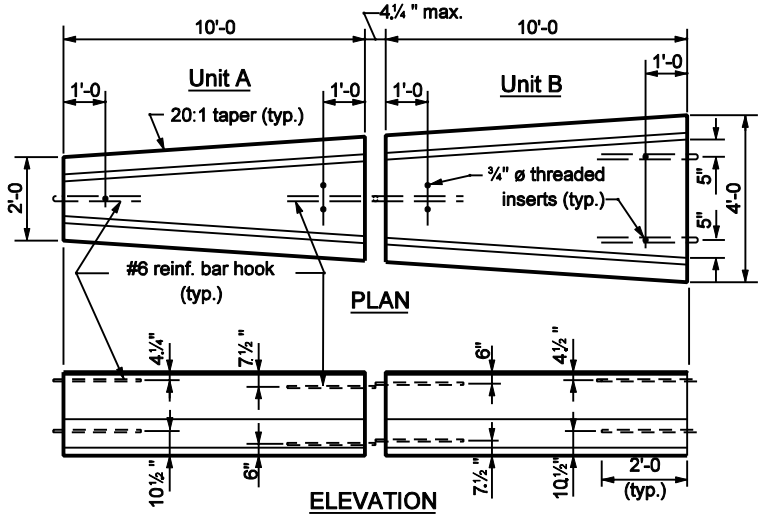

DOUBLE TAPER END SECTION ASSEMBLY

(Showing location of inserts and bar hooks)

NOTES :

1. For connection details see Standard Drawing E 801-TCCB-02.
2. For details of barrier anchorage see Standard Drawing E 801-TCCB-04.
3. Extreme ends of the double taper end assembly require a 1¼ " ø bolt x 2'-3½ " (4" min. thread, hex head and hex nut) for connecting to adjacent temporary concrete barriers.
4. For details of connection between Units A and B, see Standard Drawing E 801-TCCB-02.

INDIANA DEPARTMENT OF TRANSPORTATION

TEMPORARY CONCRETE BARRIER
DOUBLE TAPER END SECTION

SEPTEMBER 2002

STANDARD DRAWING NO. E 801-TCCB-03

RICHARD L. VanCLEAVE REGISTERED No. 9750 STATE OF INDIANA PROFESSIONAL ENGINEER

DESIGN STANDARDS ENGINEER

/s/ Richard L. VanCleave 9-03-02
DESIGN STANDARDS ENGINEER DATE

/s/ Richard K. Smutzer 9-03-02
CHIEF HIGHWAY ENGINEER DATE

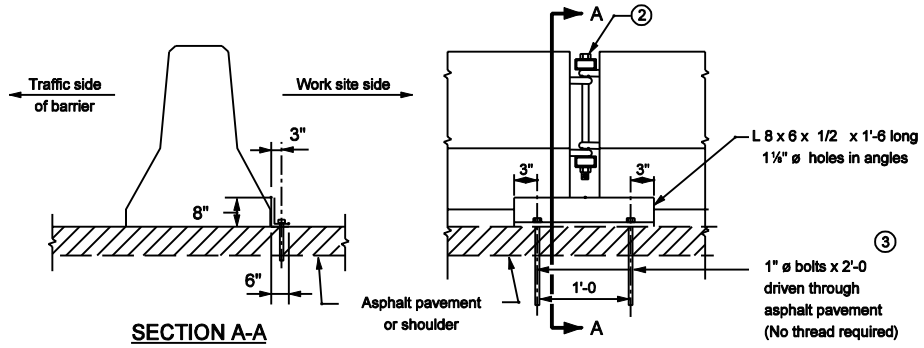

SECTION A-A

BARRIER ANCHORAGE ON ASPHALT PAVEMENT

NOTES :

1. Anchorage against lateral movement is required for temporary concrete barrier located on concrete or asphalt pavement or shoulder where it is on or within 60 ft. of a bridge or where it is used on flared alignments. The method of anchoring shall be as shown.

(2) For connection details see Standard Drawing E 801-TCCB-02.

(3) Where barrier is on soil the 1"ø anchor bolts shall be 3'-0 long.

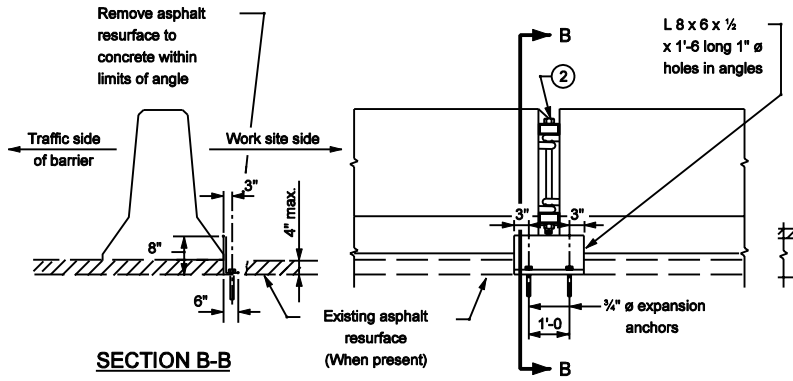

SECTION B-B

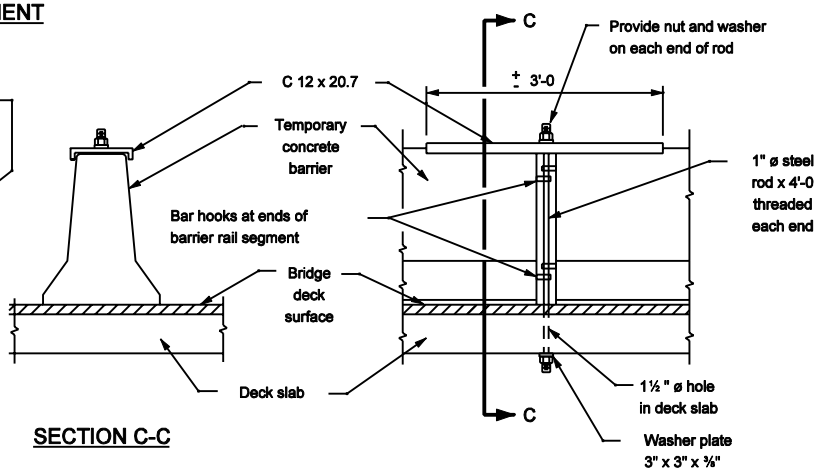

SECTION C-C

BRIDGE FLOORS AND CONCRETE PAVEMENT
STANDARD METHOD

BRIDGE FLOOR ONLY
ALTERNATE METHOD

BARRIER ANCHORAGE ON CONCRETE PAVEMENT

INDIANA DEPARTMENT OF TRANSPORTATION

TEMPORARY CONCRETE BARRIER ANCHORAGE

SEPTEMBER 2002

STANDARD DRAWING NO. E 801-TCCB-04

RICHARD L. VANCLEAVE REGISTERED No. 9750 STATE OF INDIANA PROFESSIONAL ENGINEER

DESIGN STANDARDS ENGINEER

/s/ Richard L. VanCleave 9-03-02
DESIGN STANDARDS ENGINEER DATE

/s/ Richard K. Smutzer 9-03-02
CHIEF HIGHWAY ENGINEER DATE

NOTES

1. See Standard Drawings E801-TCCO-02 and E 801-TCLG-01 for additional general notes and legend.
2. See Standard Drawing E 801-TCCO-02 for Entrance Detail.
3. See Standard Drawing E 801-TCCO-03 for Exit Detail.
4. See Standard Drawing E 801-TCDV-03 for the required length of taper section for channelizing devices for construction zone speed limits less than 55 MPH.

5 Appropriate channelizing devices:

a. For freeways - temporary concrete barrier- (see Standard Drawings E 801-TCCB-01 thru-04)

b. For non-freeways - cones or tubular markers (see Standard Drawing E 801-TCDV-01)

6. Area of Type A crossovers are shown on Standard Drawing E 801-TCLG-01 and area of Type B crossover is shown on Standard Drawing E 801-TCCO-05.



TEMPORARY CROSSOVERS

ADVANCE AND ENDING SIGNING DETAIL

INDIANA DEPARTMENT OF TRANSPORTATION

TEMPORARY CROSSOVERS ADVANCED SIGNING DETAILS

MARCH 2005

STANDARD DRAWING NO. E 801-TCCO-01

REGISTERED R. RICHARD L. VANCLEAVE No. 9750 STATE OF INDIANA PROFESSIONAL ENGINEER

DESIGN STANDARDS ENGINEER

/s/ Richard L. VanCleave 3-01-05
DESIGN STANDARDS ENGINEER DATE

/s/ Richard K. Smutzer 3-01-05
CHIEF HIGHWAY ENGINEER DATE

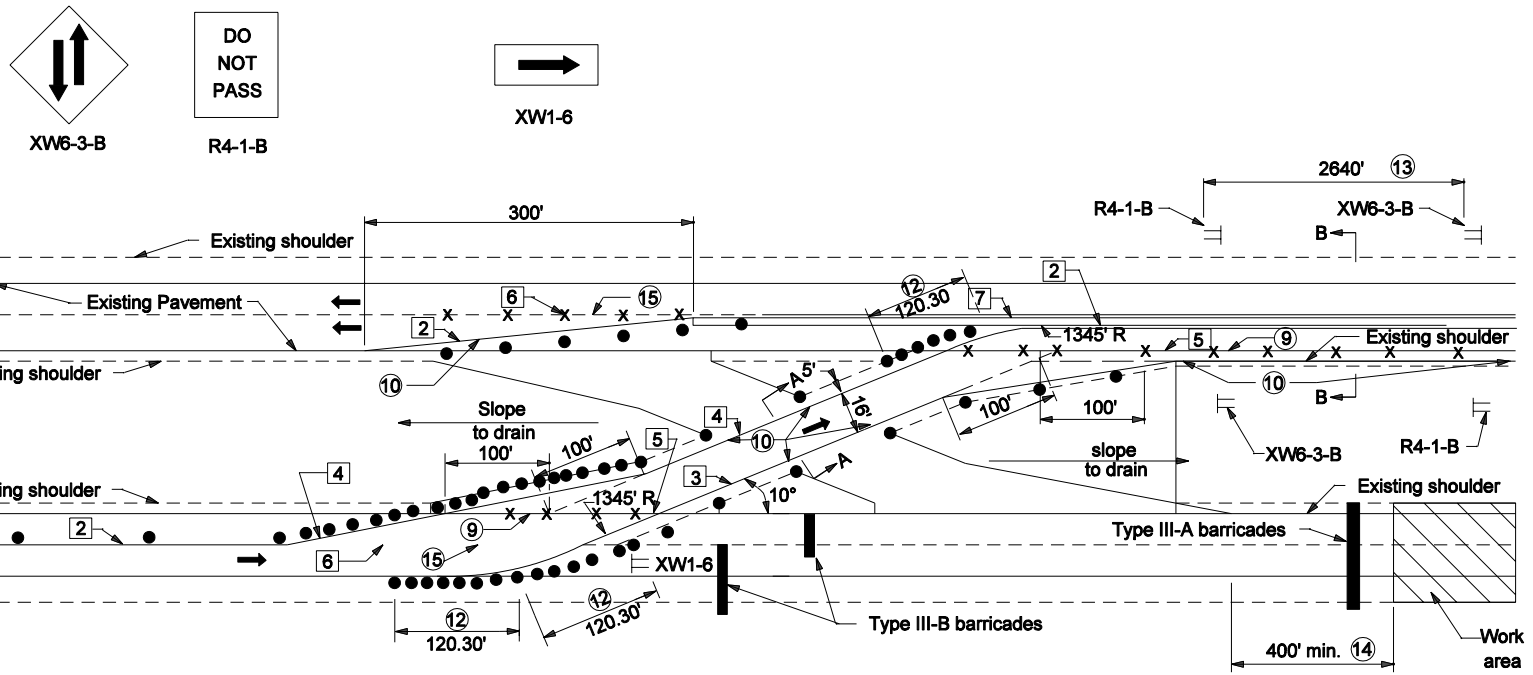

LEGEND

1. Temporary Pavement Marking, White, 4"
2. Temporary Pavement Marking, Yellow, 4"
3. Temporary Pavement Marking, White, 8"
4. Temporary Pavement Marking, Yellow, 8"
5. Line, Soild Yellow, 4", Remove
6. Line, Broken White, 4" Remove
7. Temporary Concrete Barrier - Freeways Channelizing Devices - Non-Freeway Multi-lane Divided Roadways.

NOTES:

1. Signs XW6-3-B and R4-1-B shall be used only with temporary channelizing devices.
2. See Standard Drawing E 801-TCCO-07 for Sections, A-A , B-B.
3. See Standard Drawings E 801-TCDV-04 thru E 801-TCDV-07 for barricade and construction sign mounting information.
4. For channelization devices see Standard Drawing E 801-TCDV-01.
5. See Standard Drawing E 801-TCDV-03 for required length of taper section for channelizing devices when construction zone speed limits are less than 55 MPH.
6. See Standard Drawing E 801-TCLG-01 for General Notes and additional Legend Symbols

INDIANA DEPARTMENT OF TRANSPORTATION

TEMPORARY CROSSOVERS ENTRANCE DETAIL

MARCH 2006

STANDARD DRAWING NO. E 801-TCCO-02

RICHARD L. VANCLEAVE REGISTERED No. 9750 STATE OF INDIANA PROFESSIONAL ENGINEER

DESIGN STANDARDS ENGINEER

/s/ Richard L. VanCleave 3-01-06
DESIGN STANDARDS ENGINEER DATE

/s/ Richard K. Smutzer 3-01-06
CHIEF HIGHWAY ENGINEER DATE

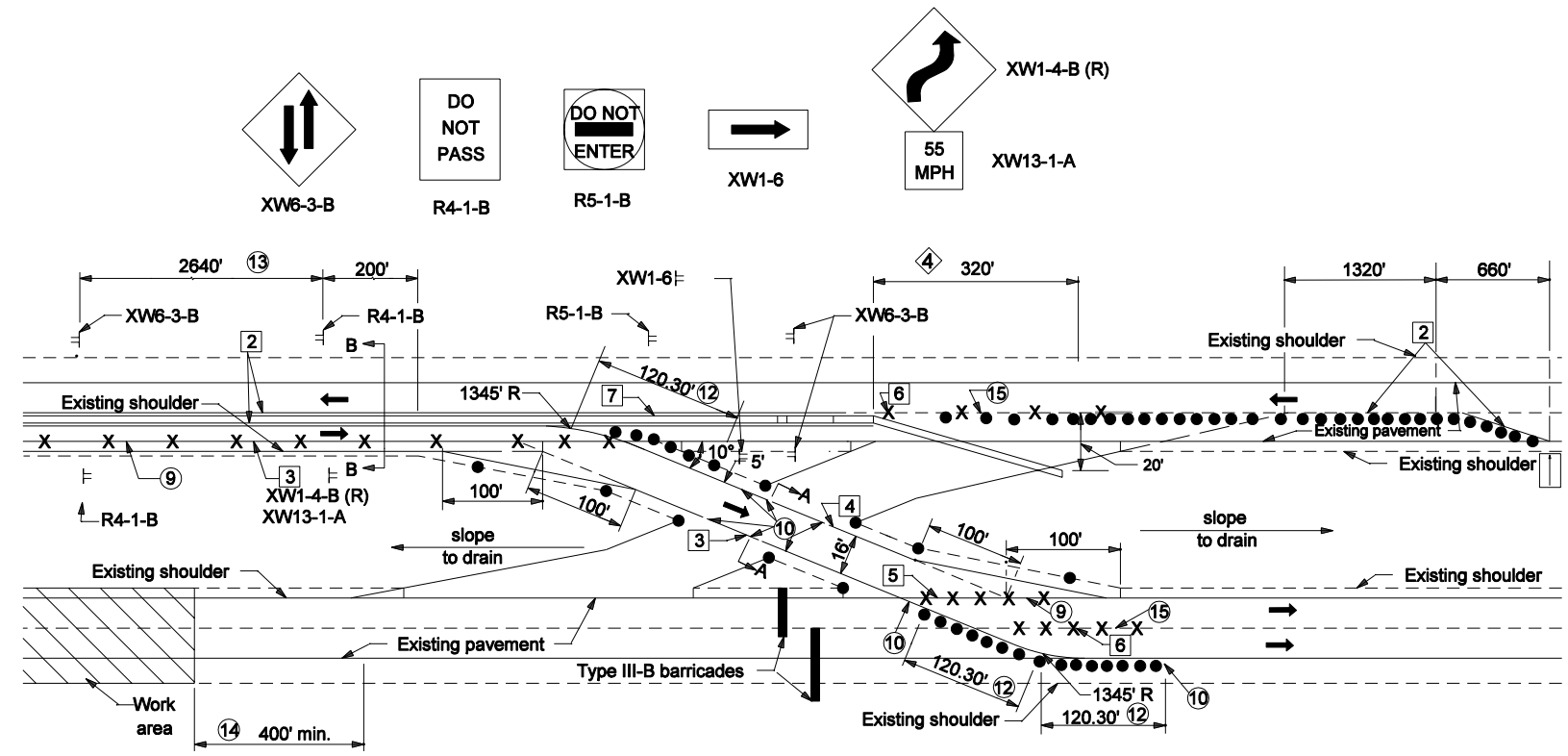

NOTES

1. Signs XW6-3-B and R4-1-B shall be used only with temporary channelizing devices.
2. See Standard Drawing E 801-TCCO-07 for Sections, A-A, B-B.
3. See Standard Drawing E 801-TCDV-03 for required length of taper section for channelizing devices for construction zone speed limits less than 55 MPH.
4. Taper required when channelizing device is temporary concrete barrier, see Standard Drawing E 801-TCCB-01.
5. See Standard Drawing E 801-TCCO-02 for ☐ Legend.
6. See Standard Drawing E 801-TCLG-01 for General Notes and additional Legend Symbols.

INDIANA DEPARTMENT OF TRANSPORTATION

TEMPORARY CROSSOVERS EXIT DETAIL

MARCH 2006

STANDARD DRAWING NO. E 801-TCCO-03

RICHARD L. VanCLEAVE REGISTERED No. 9750 STATE OF INDIANA PROFESSIONAL ENGINEER

DESIGN STANDARDS ENGINEER

/s/ Richard L. VanCleave 3-01-06
DESIGN STANDARDS ENGINEER DATE

/s/ Richard K. Smutzer 3-01-06
CHIEF HIGHWAY ENGINEER DATE

NOTES

1. See Standard Drawing E 801-TCCO-06 for Sections A-A and B-B.
2. Pave to drain.

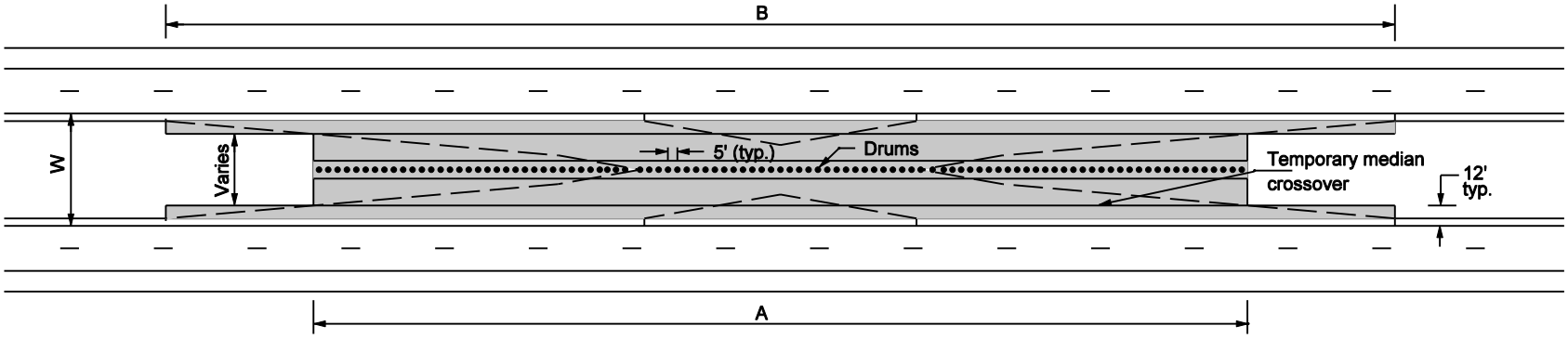

PAVING LIMITS AND DRUM CLOSURE

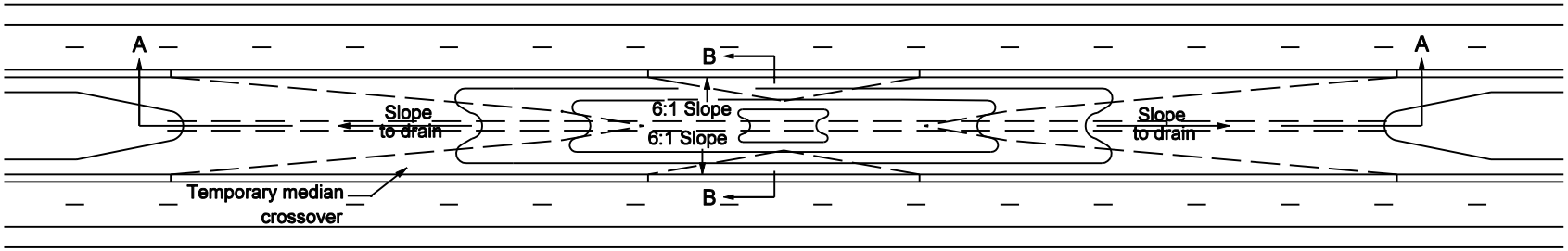

TYPE B CROSS OVER

Median Width W	Dimension A	Dimension B	Area of Paving strips
Feet	Feet	Feet	SQ. Yards
60	564	833	4310
50	505	774	3380
40	449	719	2605
36	427	696	2326
30	390	659	1930
26	371	640	1750

EARTH COVER CLOSURE

INDIANA DEPARTMENT OF TRANSPORTATION

TEMPORARY CROSSOVER TYPE B PAVING AND CLOSURE LAYOUT

SEPTEMBER 2003

STANDARD DRAWING NO. E 801-TCCO-05

RICHARD L. VanCLEAVE REGISTERED No. 9750 STATE OF INDIANA PROFESSIONAL ENGINEER

DESIGN STANDARDS ENGINEER

/s/ Richard L. VanCleave 9-02-03
DESIGN STANDARDS ENGINEER DATE

/s/ Richard K. Smutzer 9-02-03
CHIEF HIGHWAY ENGINEER DATE

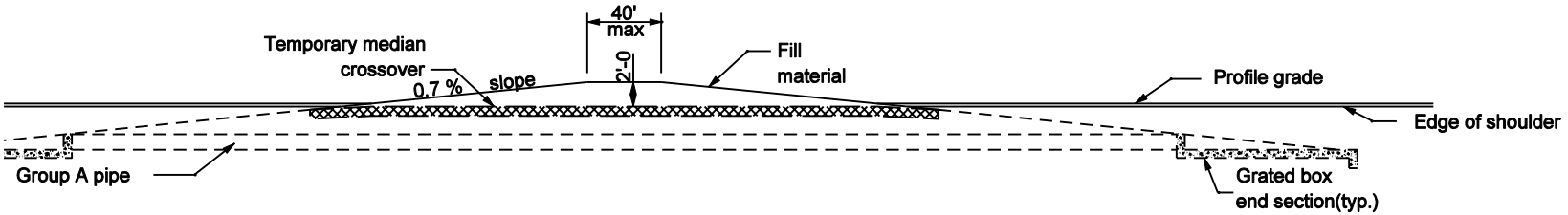

SECTION A-A

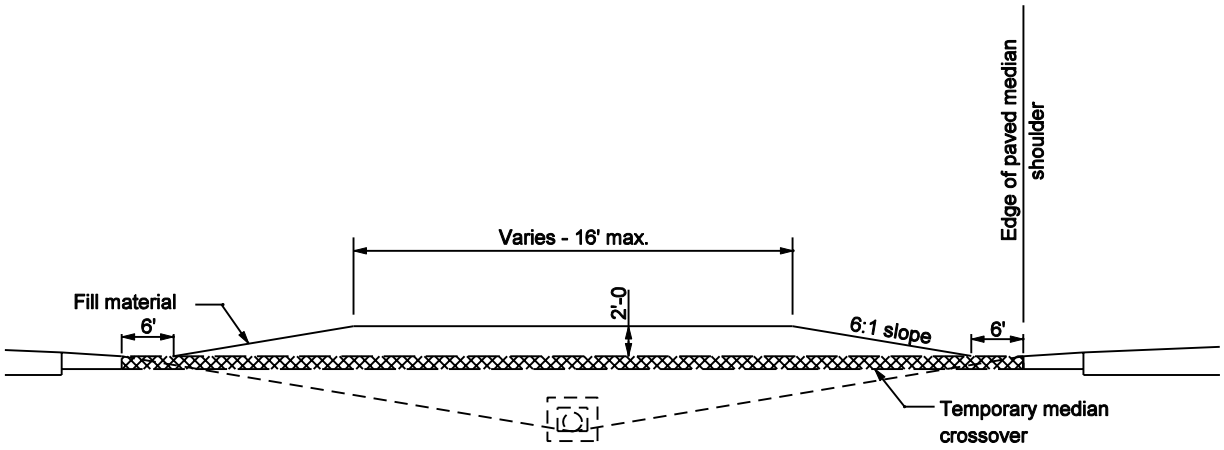

SECTION B-B

NOTES

1. See Standard Drawing E 801-TCCO-05 for temporary crossover paving and closure layout.

INDIANA DEPARTMENT OF TRANSPORTATION

CLOSURE OF TEMPORARY CROSSOVER

SEPTEMBER 2003

STANDARD DRAWING NO. E 801-TCCO-06

RICHARD L. VanCLEAVE REGISTERED No. 9750 STATE OF INDIANA PROFESSIONAL ENGINEER

DESIGN STANDARDS ENGINEER

/s/ Richard L. VanCleave 9-02-03
DESIGN STANDARDS ENGINEER DATE

/s/ Richard K. Smutzer 9-02-03
CHIEF HIGHWAY ENGINEER DATE

GENERAL NOTES:

1. See Standard Drawing E 801-TCCO-02 for Legend

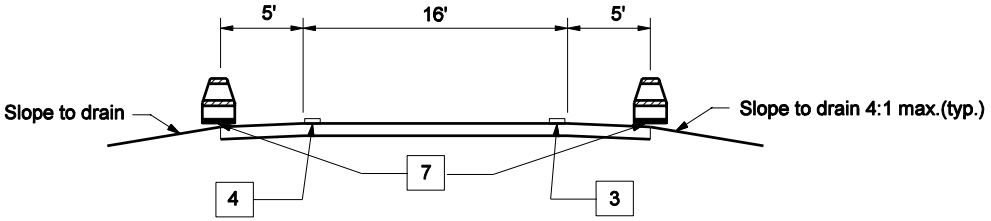

SECTION A-A

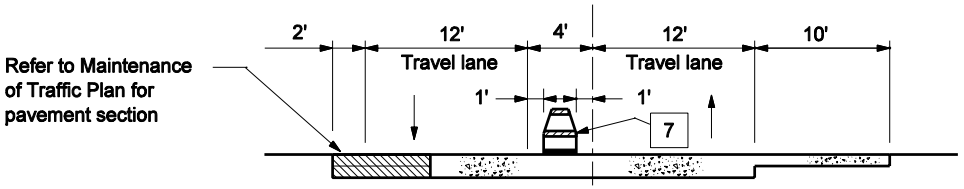

TRAFFIC MAINTENANCE SECTION

SECTION B-B

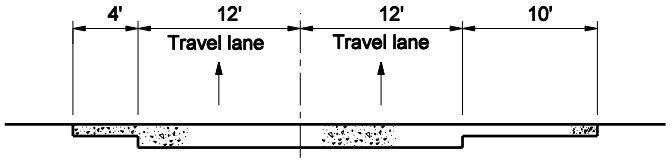

PRE CONSTRUCTION SECTION

INDIANA DEPARTMENT OF TRANSPORTATION

TEMPORARY CROSSOVER TYPICAL SECTIONS

MARCH 2006

STANDARD DRAWING NO. E 801-TCCO-07

RICHARD L. VanCLEAVE REGISTERED No. 9750 STATE OF INDIANA PROFESSIONAL ENGINEER

DESIGN STANDARDS ENGINEER

/s/ Richard L. VanCleave 3-01-06
DESIGN STANDARDS ENGINEER DATE

/s/ Richard K. Smutzer 3-01-06
CHIEF HIGHWAY ENGINEER DATE

NOTES

1. For detour route marker assemblies (A), (B), (C), and (D), see Standard Drawing E 801-TCDT-03.
2. See Standard Drawing E 801-TCLG-01 for standard notes and legend.

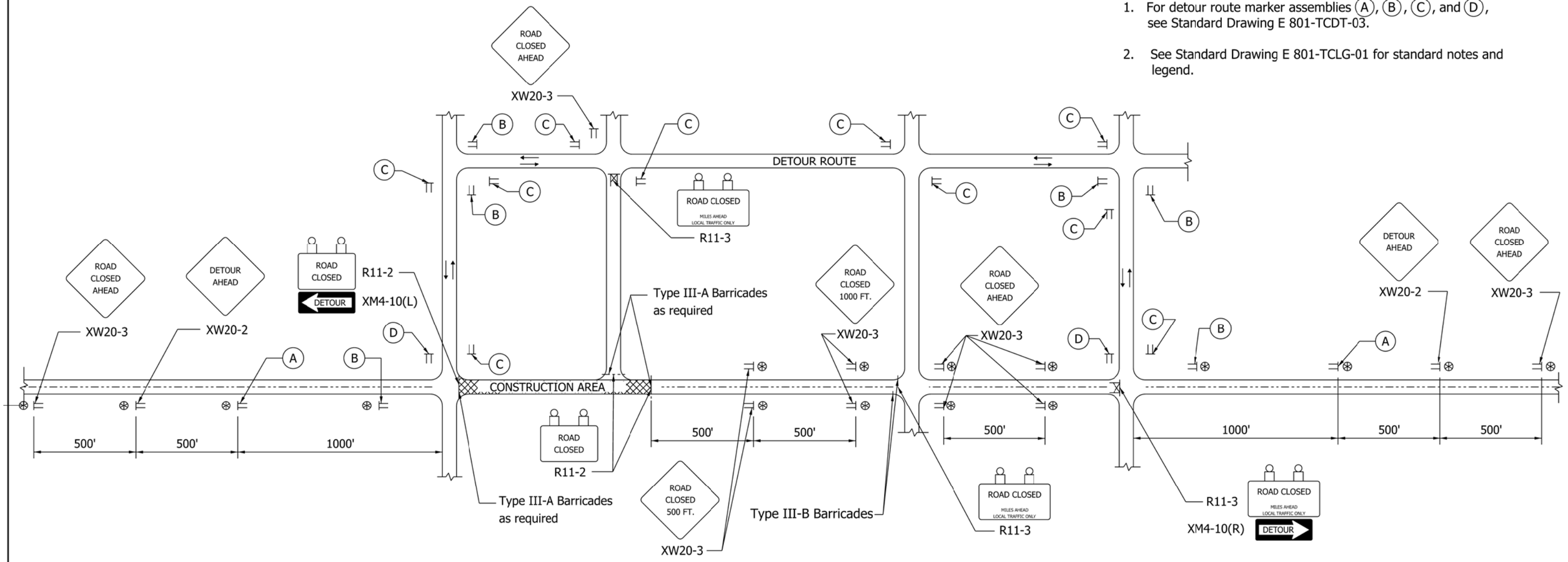

TYPICAL APPLICATIONS OF TRAFFIC CONTROL DEVICES FOR A RURAL DETOUR

INDIANA DEPARTMENT OF TRANSPORTATION

RURAL DETOUR

SEPTEMBER 2011

STANDARD DRAWING NO. E 801-TCDT-01

RICHARD L. VanCLEAVE REGISTERED No. 9750 STATE OF INDIANA PROFESSIONAL ENGINEER

DESIGN STANDARDS ENGINEER

/s/ Richard L. VanCleave 09/01/11
DESIGN STANDARDS ENGINEER DATE

/s/ Mark A. Miller 09/01/11
CHIEF HIGHWAY ENGINEER DATE

NOTES:

1. For detour route marker assemblies (A), (B), (C), and (D), see Standard Drawing E 801-TCDT-03.
2. See Standard Drawing E 801-TCLG-01 for standard notes and legend.

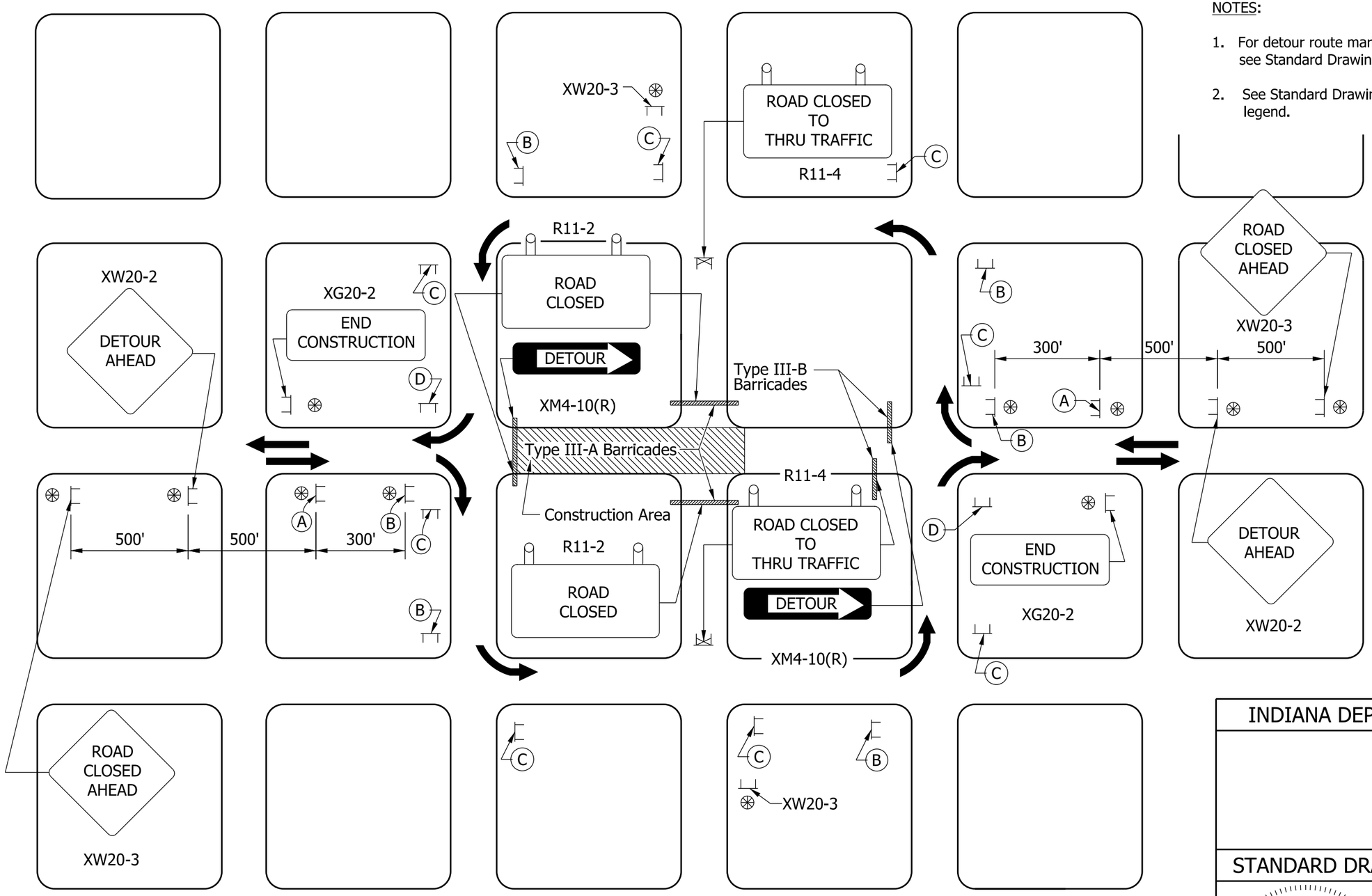

TYPICAL APPLICATIONS OF TRAFFIC DEVICES FOR AN URBAN DETOUR

INDIANA DEPARTMENT OF TRANSPORTATION

URBAN DETOUR

SEPTEMBER 2011

STANDARD DRAWING NO. E 801-TCDT-02

RICHARD L. VanCLEAVE REGISTERED No. 9750 STATE OF INDIANA PROFESSIONAL ENGINEER

DESIGN STANDARDS ENGINEER

/s/ Richard L. VanCleave 09/01/11
DESIGN STANDARDS ENGINEER DATE

/s/ Mark A. Miller 09/01/11
CHIEF HIGHWAY ENGINEER DATE

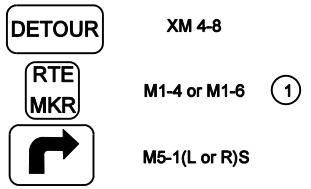

(A) ADVANCE TURN DETOUR ROUTE MARKER ASSEMBLY

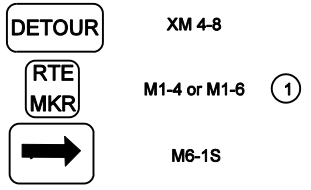

(B) DIRECTIONAL DETOUR ROUTE MARKER ASSEMBLY

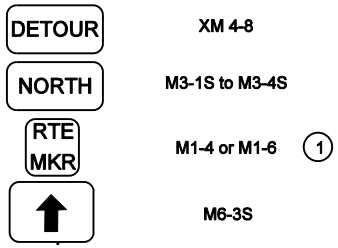

(C) CONFIRMING DETOUR ROUTE MARKER ASSEMBLY

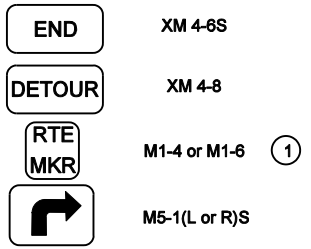

(D) END DETOUR ROUTE MARKER ASSEMBLY

GENERAL NOTES

(1) For an un-numbered route, a street name sign or county road name or number sign shall be used in lieu of the route marker in detour route marker assembly.

(A) Advance turn detour route marker assemblies shall be located as shown, or after the last cross street prior to the beginning of the detour, as directed.

(B) Directional detour route marker assemblies shall be located 100 ft to 200 ft in advance of all required turns within the detour limits.

(C) Confirming detour route marker assemblies shall be located 200 ft past all major intersections, as directed, and shall be spaced a maximum of 3 mi on a rural detour or 0.5 mi on an urban detour on each leg of such detours. Confirming detour route marker assemblies shall be placed after a required turn when directed.

(D) End detour route marker assemblies shall be located at the point at which traffic is returned to the original route. The advance turn marker (M5-1) shall be included in the assembly when traffic is required to turn to access the original route.

INDIANA DEPARTMENT OF TRANSPORTATION

DETOUR ROUTE MARKER ASSEMBLIES

MARCH 2003

STANDARD DRAWING NO. E 801-TCDT-03

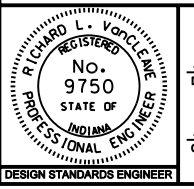

DESIGN STANDARDS ENGINEER

/s/ Richard L. VanCleave 3-03-03
DESIGN STANDARDS ENGINEER DATE

/s/ Richard K. Smutzer 3-03-03
CHIEF HIGHWAY ENGINEER DATE

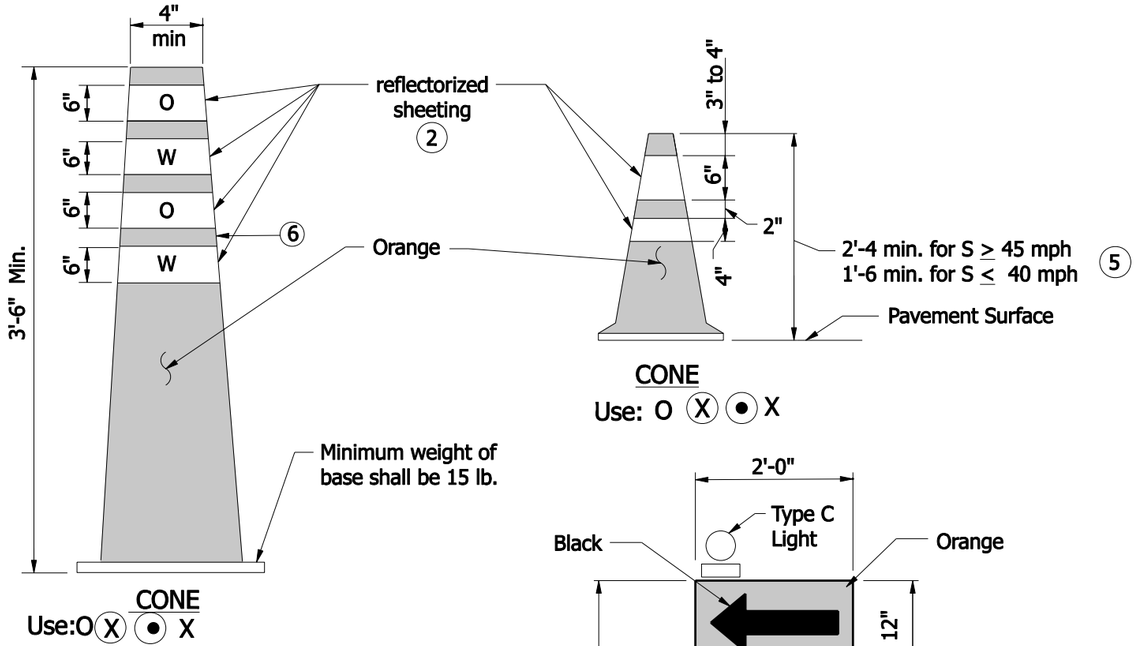

CONE

Use: O (X) (●) X

CONE

Use:O (X) (●) X

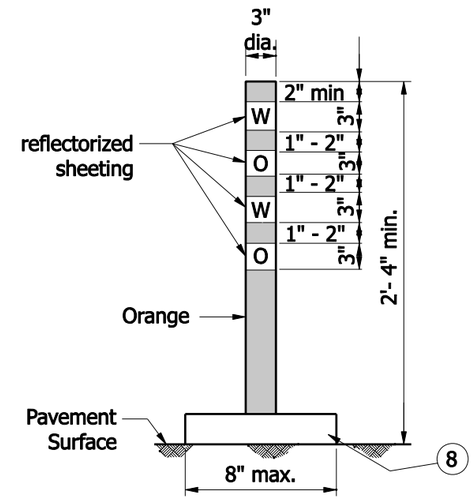

FLEXIBLE TUBULAR MARKER

Use: [O] (X) (●)

GENERAL NOTES

1. For additional notes and legends see Standard Drawing E 801-TCLG-01 or E 801-TCDV-02.
2. A Type C warning light will be required on tapers where there is a reduction in the number of lanes and a flashing arrow sign is used..

DIRECTION INDICATOR BARRICADE

Use: X

W = White Reflective Sheeting

O = Orange Reflective Sheeting

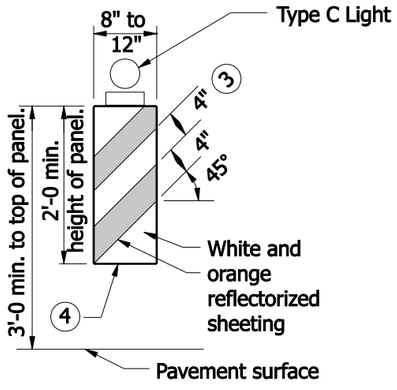

VERTICAL PANEL (9)

Use: [O] (O) O X

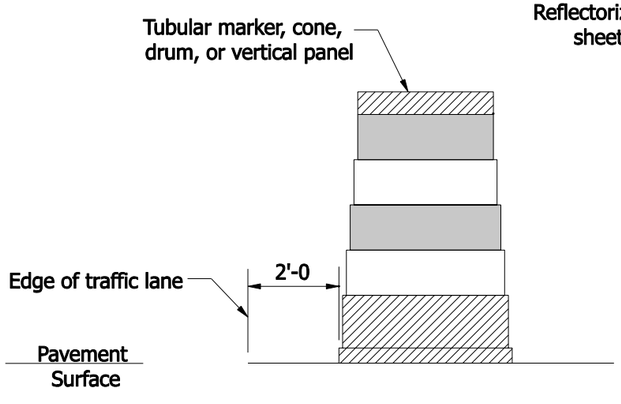

PLACEMENT OF CHANNELIZING DEVICES

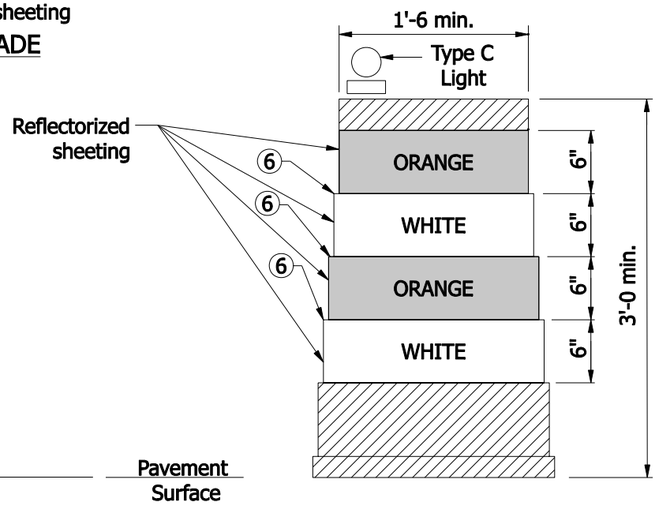

DRUM (9)

Use: O X

INDIANA DEPARTMENT OF TRANSPORTATION

CHANNELIZING DEVICES

SEPTEMBER 2007

STANDARD DRAWING NO. E 801-TCDV-01

RICHARD L. VanCLEAVE REGISTERED No. 9750 STATE OF INDIANA PROFESSIONAL ENGINEER

DESIGN STANDARDS ENGINEER

/s/ Richard L. VanCleave 09/04/07
DESIGN STANDARDS ENGINEER — DATE

/s/ Mark A. Miller 09/04/07
CHIEF HIGHWAY ENGINEER — DATE

GENERAL NOTES

1. Unless otherwise specified, channelizing devices shall be spaced as shown on Standard Drawing E 801-TCLG-01.

(2) Reflectorized bands may be omitted from cones for lane closures during daylight hours.

(3) For vertical panels greater than 3 ft in height, the width of the stripes shall be 6 in.

(4) Vertical panels used on an expressway or a freeway shall have a minimum reflective panel area of 270 in². Other roadways with a posted speed limit of 50 mph or greater shall also have a minimum reflective panel area of 270 in².

(5) Cones shall have a minimum height of 2'-4" when used at night.

(6) The maximum distance between the edges of adjacent reflective sheeting strips shall be 2 in.

7. Panel and direction indicator barricades and supports shall meet NCHRP 350 crash evaluation criteria.

(8) Minimum flexible tubular marker base area shall be 0.3 ft.²

(9) It is not necessary to delineate a drop-off of 3 in. or less adjacent to active travel lanes. Where channellizing devices are used to delineate drop-offs of 3 in. or less adjacent to active travel lanes, at least 33 in. of the device shall be above the adjoining pavement surface. Where channelizing devices are used to delineate a drop-off greater than 3 in. adjacent to active travel lanes, at least 27 in. of the device shall be above the adjoining pavement surface. In no case shall more than 9 in. of the device be below the adjoining pavement surface.

10. The proper orientation in respect to approaching vehicular traffic shall be maintained on vertical panels. Drums are the preferred channelizing device in a tight radius curve.

LEGEND

O - Device may be used in tangent set-ups.

X - Device may be used in taper or transition set-ups.

(X) - Devices may be used in two-way traffic set-ups to divide opposing lanes of traffic.

(●) - Device may be used to divide two or more lanes of traffic in the same direction.

(O) - Device may be used to replace barricades and drums where space is limited.

[O] - Device may be used to delineate edge of pavement drop-off where space is limited.

INDIANA DEPARTMENT OF TRANSPORTATION

CHANNELIZING DEVICES

SEPTEMBER 2009

STANDARD DRAWING NO. E 801-TCDV-02

RICHARD L. VanCLEAVE REGISTERED No. 9750 STATE OF INDIANA PROFESSIONAL ENGINEER

DESIGN STANDARDS ENGINEER

/s/ Richard L.VanCleave 09/01/09
DESIGN STANDARDS ENGINEER DATE

/s/ Mark A. Miller 09/01/09
CHIEF HIGHWAY ENGINEER DATE

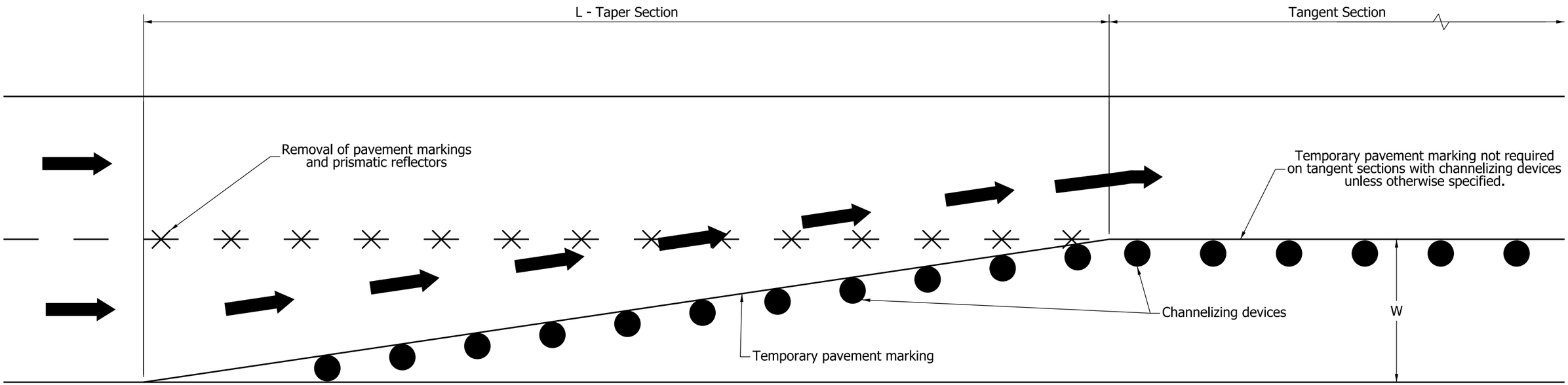

LEGEND

L - Minimum length of taper in feet.

S - Posted speed limit prior to the construction zone in mph.

W - Width of offset in feet.

S	L			
MPH	W = 9	W = 10	W = 11	W = 12
20	60	70	70	80
25	90	100	120	130
30	140	150	170	180
35 & 40	180 & 240	200 & 270	220 & 300	250 & 320
45	400	450	500	540
50	450	500	550	600
55	500	550	610	660
65	590	650	720	780

The values of L for speeds of 45 mph or greater are based on the equation $L = W \times S$.
The values for speeds of less than 40 mph or lower are based on the equation $L = W \times S^2/60$.
For both equations, L and W are in feet and S is mph. These equations are taken from the MUTCD. The taper lengths used in the field, may be either the values provided in the table or calculated values from the equations. For offset widths other than those used in the table, the taper lengths shall be calculated based on the equations.

INDIANA DEPARTMENT OF TRANSPORTATION

MERGING OR SHIFTING TAPER

SEPTEMBER 2009

STANDARD DRAWING NO. E 801-TCDV-03

RICHARD L. VanCLEAVE
REGISTERED
No. 9750
STATE OF INDIANA
PROFESSIONAL ENGINEER

DESIGN STANDARDS ENGINEER

/s/ Richard L. VanCleave 09/01/09
DESIGN STANDARDS ENGINEER DATE

/s/ Mark A. Miller 09/01/09
CHIEF HIGHWAY ENGINEER DATE

General Notes

1. Barricades lights, signs, and supports shall meet NCHRP 350 crash evaluation criteria.
2. The Detour Arrow sign shall be used only when a detour route has been signed.

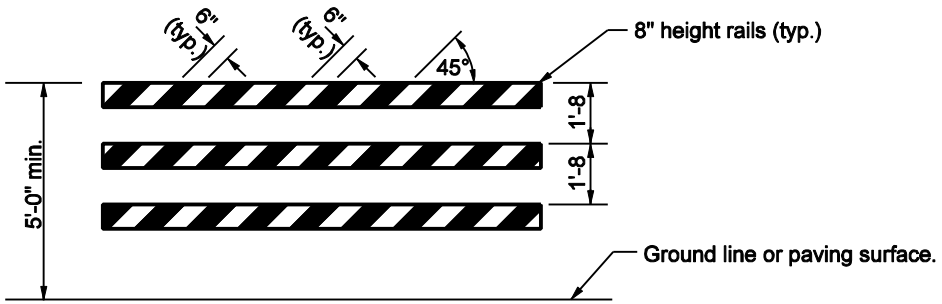

TYPE III BARRICADE

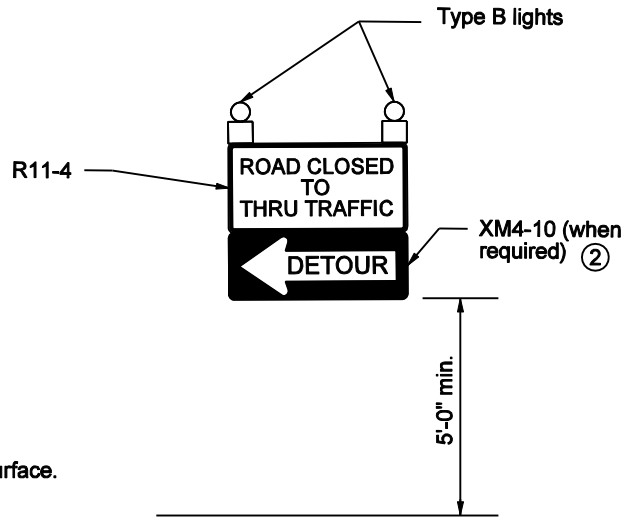

INDIANA DEPARTMENT OF TRANSPORTATION

TYPE III BARRICADE

SEPTEMBER 2002

STANDARD DRAWING NO. E 801-TCDV-04

RICHARD L. VanCLEAVE REGISTERED No. 9750 STATE OF INDIANA PROFESSIONAL ENGINEER
DESIGN STANDARDS ENGINEER

/s/ Richard L. VanCleave 9-03-02
DESIGN STANDARDS ENGINEER DATE

/s/ Richard K. Smutzer 9-03-02
CHIEF HIGHWAY ENGINEER DATE

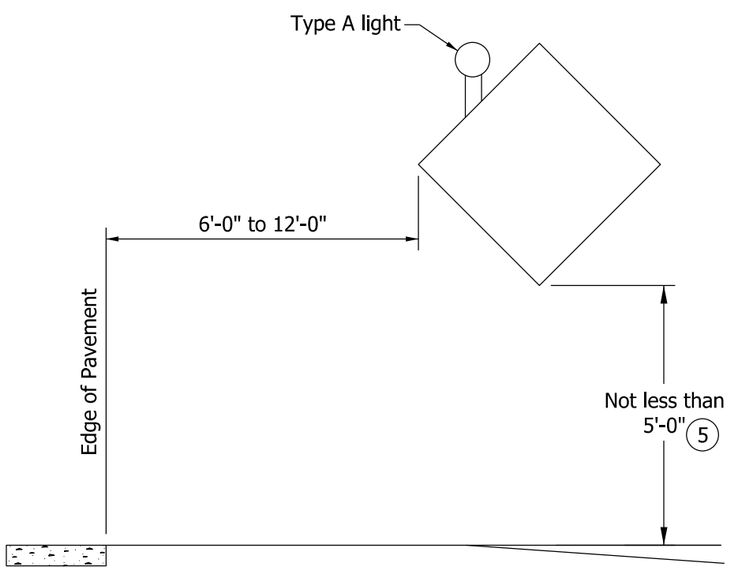

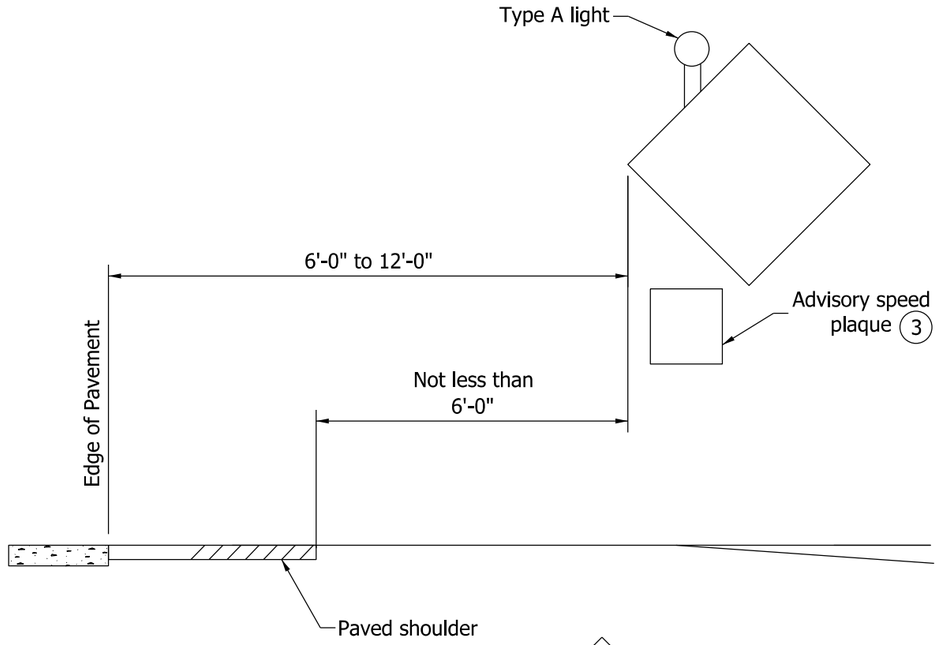

UN-CURBED ROADWAY

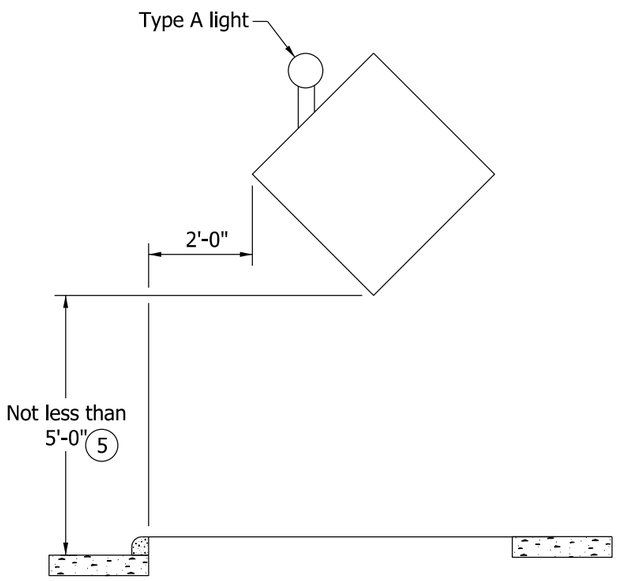

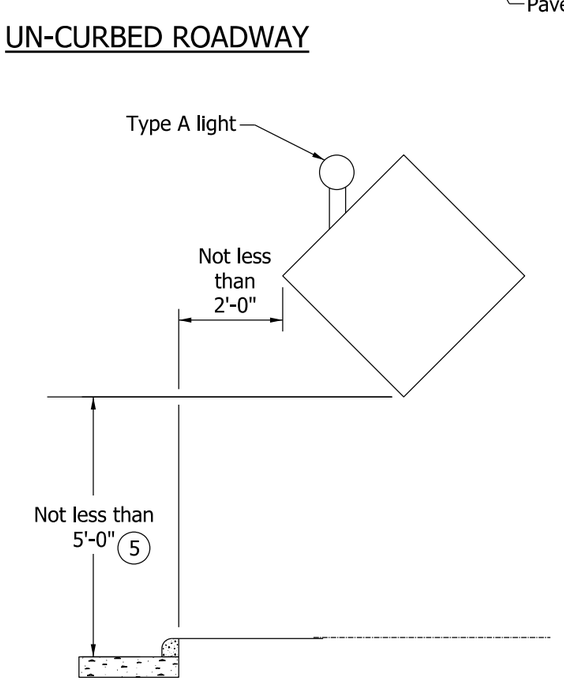

CURBED ROADWAY

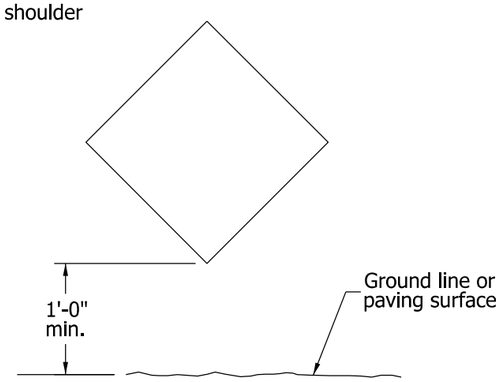

TEMPORARY MOUNTED
CONSTRUCTION SIGN

NOTES:

1. See Standard Drawing E 801-TCSN-11 for additional notes.
2. Signs, lights, and supports shall satisfy NCHRP 350 crash evaluation criteria.
3. An advisory speed plaque, required to be placed with another construction sign, may be mounted on the post closest to the roadway at a height not less than 4 ft above the edge of pavement adjacent to the sign. The bottom of the construction warning sign shall not be lower than the top of the advisory speed plaque.
4. Type A warning light required on all construction signs.
5. In urban area or on Interstate route, mounting height shall not be less than 7 ft.

INDIANA DEPARTMENT OF TRANSPORTATION

TYPICAL CONSTRUCTION SIGNS MOUNTING

SEPTEMBER 2002

STANDARD DRAWING NO. E 801-TCDV-05

RICHARD L. VanCLEAVE REGISTERED No. 9750 STATE OF INDIANA PROFESSIONAL ENGINEER

DETAILS PLACED IN THIS FORMAT 09/04/12

/s/ Richard L. VanCleave *09/04/12*

SUPERVISOR, ROADWAY STANDARDS DATE

/s/ Mark A. Miller *09/04/12*

CHIEF ENGINEER DATE

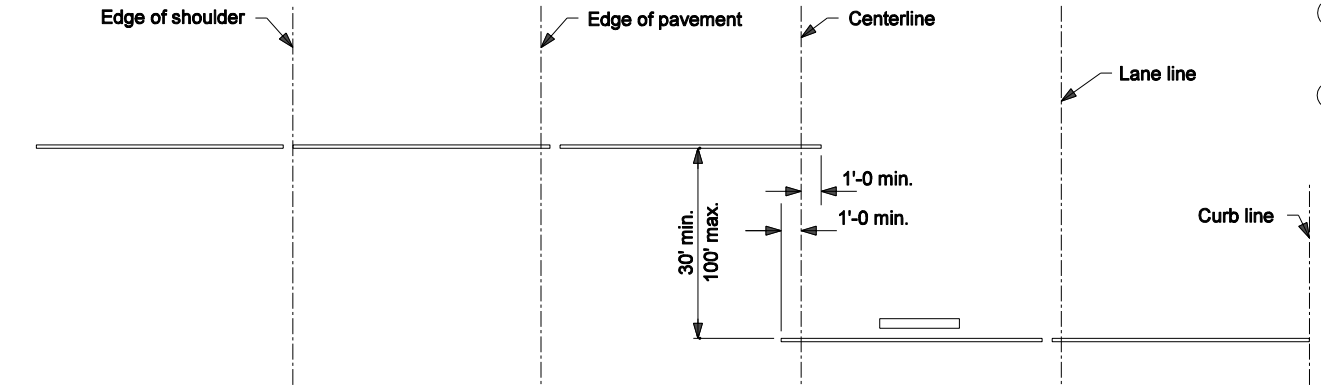

(HALF PLAN WITH SHOULDER SECTION)

PLAN VIEW

(HALF PLAN WITH CURB SECTION)

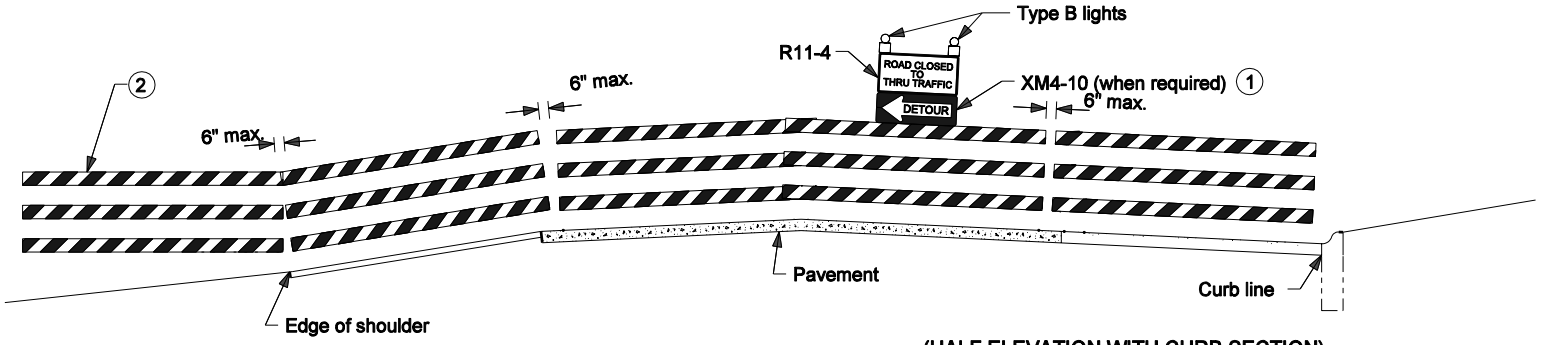

ELEVATION

(HALF ELEVATION WITH SHOULDER SECTION)

(HALF ELEVATION WITH CURB SECTION)

GENERAL NOTES

1. The Detour Arrow sign shall be used only when a detour route has been signed.
2. Barricades shall be supported on driven posts in areas outside of the pavement or sidewalk, where side slopes are 3 to 1 or flatter.
3. See standard drawing E 801-TCDV-04 for sign use and mounting information.
4. Barricades and supports shall meet NCHRP 350 crash evaluation criteria.
5. See Note 4 on Standard Drawing E 801-TCSN-11 for post depth.

TYPICAL APPLICATIONS OF TYPE III BARRICADES
ROAD CLOSED TO THRU TRAFFIC

INDIANA DEPARTMENT OF TRANSPORTATION

TYPE III BARRICADE TYPICAL APPLICATION

MARCH 2005

STANDARD DRAWING NO. E 801-TCDV-06

RICHARD L. VanCLEAVE REGISTERED No. 9750 STATE OF INDIANA PROFESSIONAL ENGINEER

DESIGN STANDARDS ENGINEER

/s/ Richard L. VanCleave 3-01-05
DESIGN STANDARDS ENGINEER DATE

/s/ Richard K. Smutzer 3-01-05
CHIEF HIGHWAY ENGINEER DATE

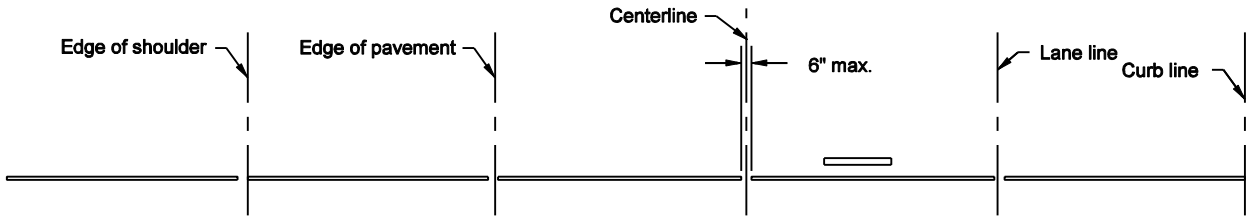

(HALF PLAN WITH SHOULDER SECTION)

(HALF PLAN WITH CURB SECTION)

PLAN VIEW

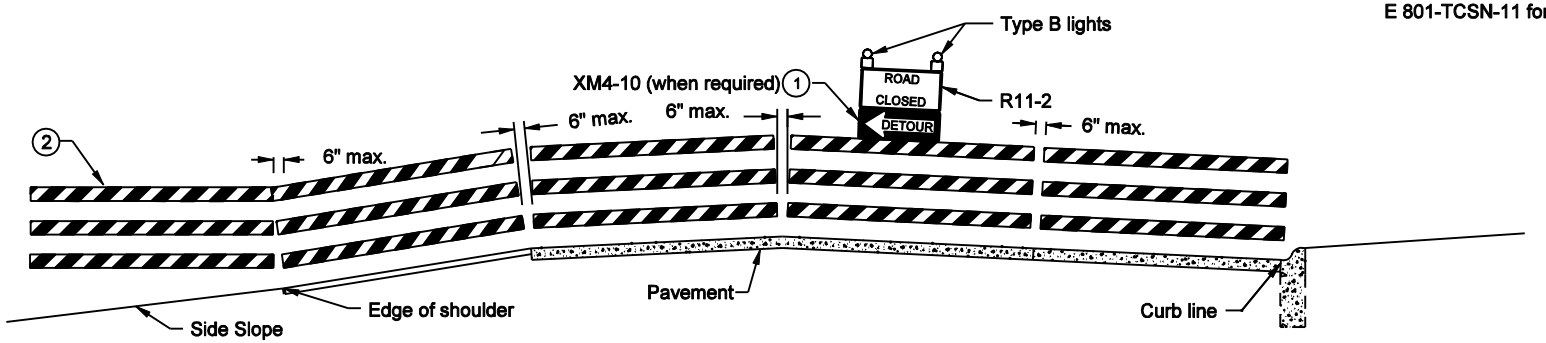

(HALF ELEVATION WITH SHOULDER SECTION)

(HALF ELEVATION WITH CURB SECTION)

ELEVATION

TYPICAL APPLICATIONS OF TYPE III BARRICADES
ROAD CLOSED TO ALL TRAFFIC

GENERAL NOTES

1. The Detour Arrow sign shall be used only when a detour route has been signed.
2. Barricades shall be supported on driven posts in areas outside of the pavement or sidewalk, where side slopes are 3 to 1 or flatter.
3. See standard drawing E 801-TCDV-04 for sign use and mounting information.
4. Barricades and supports shall meet NCHRP 350 crash evaluation criteria.
4. See Note 5 on Standard Drawing E 801-TCSN-11 for post depth.

INDIANA DEPARTMENT OF TRANSPORTATION

TYPE III BARRICADE TYPICAL APPLICATIONS

SEPTEMBER 2002

STANDARD DRAWING NO. E 801-TCDV-07

RICHARD L. VanCLEAVE REGISTERED No. 9750 STATE OF INDIANA PROFESSIONAL ENGINEER

DESIGN STANDARDS ENGINEER

/s/ Richard L.VanCleave 9-03-02
DESIGN STANDARDS ENGINEER DATE

/s/ Richard K. Smutzer 9-03-02
CHIEF HIGHWAY ENGINEER DATE

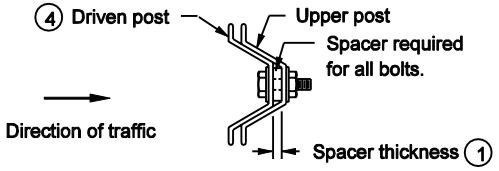

SECTION "A-A"

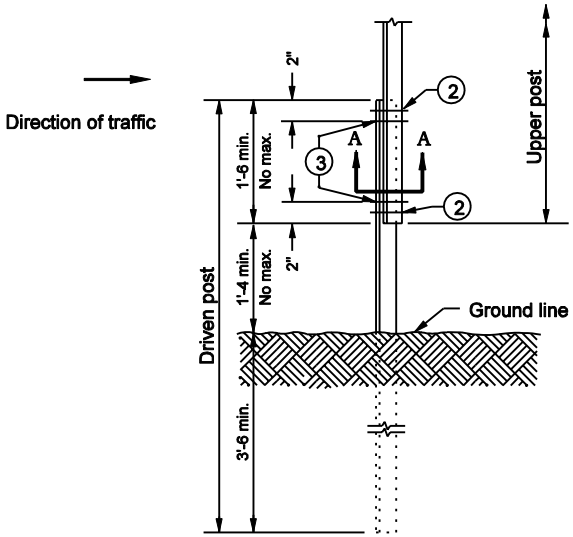

ELEVATION

U CHANNEL STEEL POST SPLICE

GENERAL NOTES

① The spacer thickness shall be 1/16 in.. less than the gap between the posts when positioned in the unbolted configuration.

② The exterior bolt, spacer, washer, and nut shall be installed in a prepunched hole within the first 2 in. of the end of the lapped post section.

③ The interior bolt, spacer, washer, and nut shall be installed in a prepunched hole within the first 2 in. of the exterior bolts. The maximum spacing between the interior bolts shall be 1'-6 . If the length of the post lap is increased such that this 1'-6 maximum is exceeded, then additional interior bolts shall be installed such that the maximum space between adjacent interior bolts does not exceed the 1'-6 limit.

④ The driven post shall always be mounted in front of the upper post with respect to adjacent oncoming traffic, regardless of the direction the sign is facing,

5. The bolts shown shall be 5/16" x 2".

INDIANA DEPARTMENT OF TRANSPORTATION

U CHANNEL STEEL
POST SPLICE DETAIL

SEPTEMBER 2002

STANDARD DRAWING NO. E 801-TCDV-08

RICHARD L. VANCLEAVE REGISTERED No. 9750 STATE OF INDIANA PROFESSIONAL ENGINEER
DESIGN STANDARDS ENGINEER

/s/ Richard L.VanCleave 9-03-02
DESIGN STANDARDS ENGINEER DATE

/s/ Richard K. Smutzer 9-03-02
CHIEF HIGHWAY ENGINEER DATE

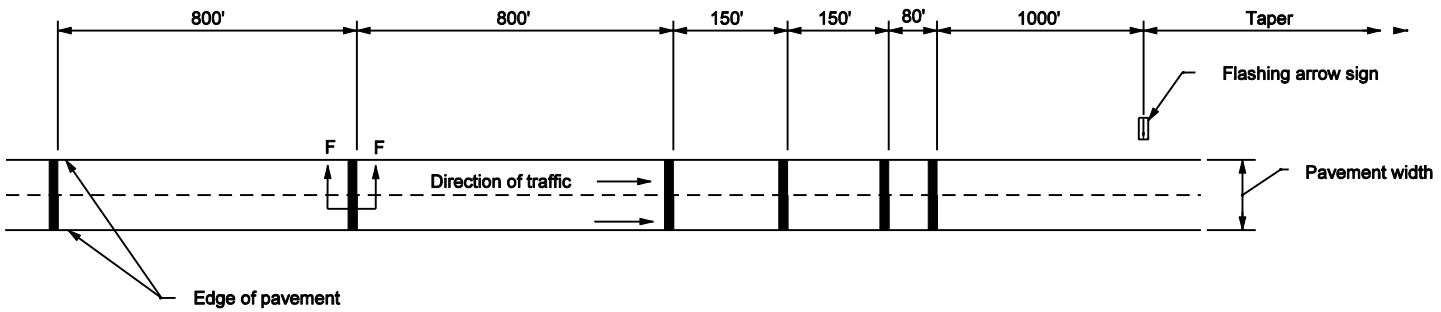

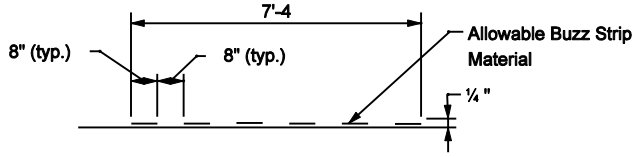

SECTION F-F
(Typ.)

INDIANA DEPARTMENT OF TRANSPORTATION

BUZZ STRIP INSTALLATION

MARCH 2003

STANDARD DRAWING NO. E 801-TCDV-09

RICHARD L. VanCLEAVE REGISTERED No. 9750 STATE OF INDIANA PROFESSIONAL ENGINEER

DESIGN STANDARDS ENGINEER

/s/ Richard L. VanCleave 3-03-03
DESIGN STANDARDS ENGINEER DATE

/s/ Richard K. Smutzer 3-03-03
CHIEF HIGHWAY ENGINEER DATE

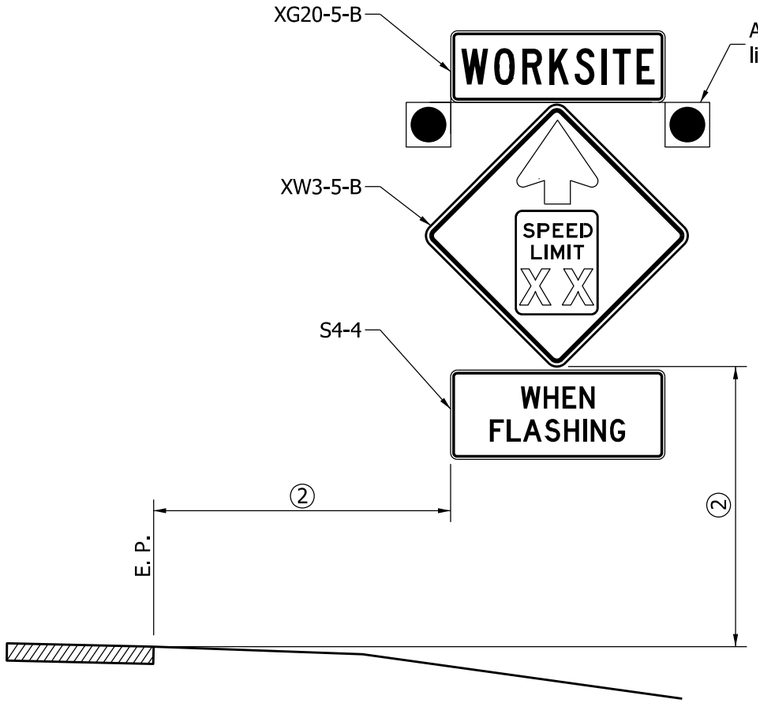

REDUCED SPEED ADVANCE
WARNING SIGN ASSEMBLY

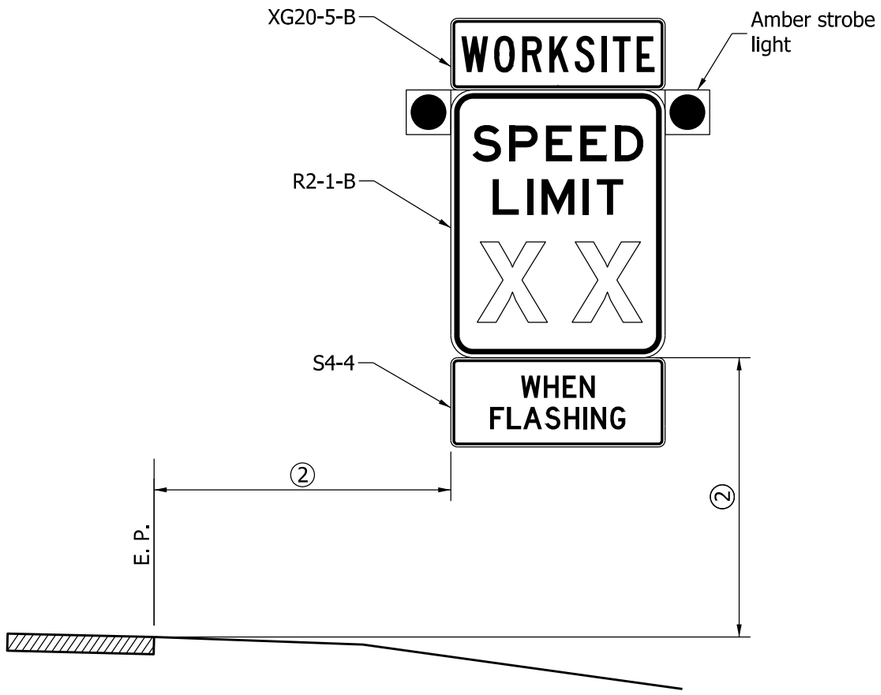

WORKSITE SPEED LIMIT
SIGN ASSEMBLY

NOTES:

1. If not trailer mounted, signs and supports shall satisfy NCHRP 350 crash evaluation criteria.
2. See Standard Drawing 801-TCDV-05 for lateral and vertical placement.
3. Advance warning sign speed limit shall match that on worksite speed limit sign.
4. The worksite speed limit shall be at least 10 mph below the posted speed limit for the roadway under construction.
5. Sign series shown is for freeway or expressway application.

INDIANA DEPARTMENT OF TRANSPORTATION

WORKSITE SPEED LIMIT SIGN ASSEMBLY
FOR INTERMITTENT USE
(When Workers Present)

SEPTEMBER 2012

STANDARD DRAWING NO. E 801-TCDV-10

RICHARD L. VanCLEAVE
REGISTERED
No. 9750
STATE OF INDIANA
PROFESSIONAL ENGINEER

/s/ Richard L. VanCleave 09/04/12
SUPERVISOR, ROADWAY STANDARDS DATE

/s/ Mark A. Miller 09/04/12
CHIEF ENGINEER DATE

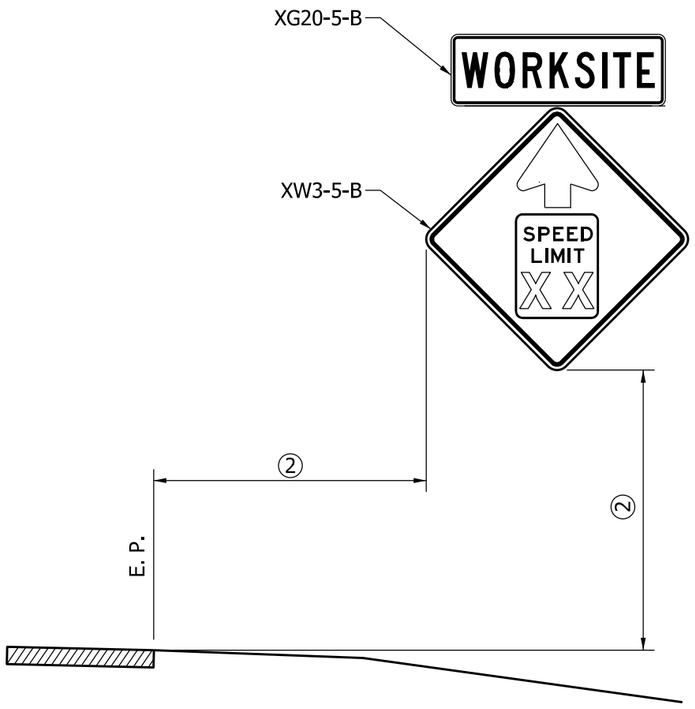

REDUCED SPEED ADVANCE
WARNING SIGN ASSEMBLY

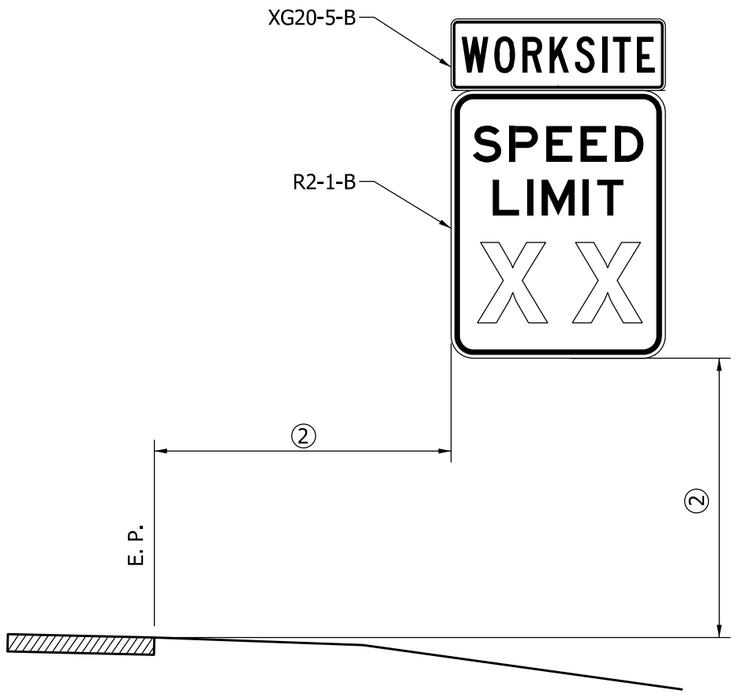

WORKSITE SPEED LIMIT
SIGN ASSEMBLY

NOTES:

1. If not trailer mounted, signs and supports shall satisfy NCHRP 350 crash evaluation criteria.
2. See Standard Drawing 801-TCDV-05 for lateral and vertical placement.
3. Advance warning sign speed limit shall match that on worksite speed limit sign.
4. The worksite speed limit shall be at least 10 mph below the posted speed limit for the roadway under construction.
5. Sign series shown is for freeway or expressway application.

INDIANA DEPARTMENT OF TRANSPORTATION

WORKSITE SPEED LIMIT
SIGN ASSEMBLY
(For Continuous Use)
SEPTEMBER 2012

STANDARD DRAWING NO. E 801-TCDV-11

RICHARD L. VanCLEAVE
REGISTERED
No. 9750
STATE OF INDIANA
PROFESSIONAL ENGINEER

/s/ Richard L. VanCleave 09/04/12
SUPERVISOR, ROADWAY STANDARDS DATE

/s/ Mark A. Miller 09/04/12
CHIEF ENGINEER DATE

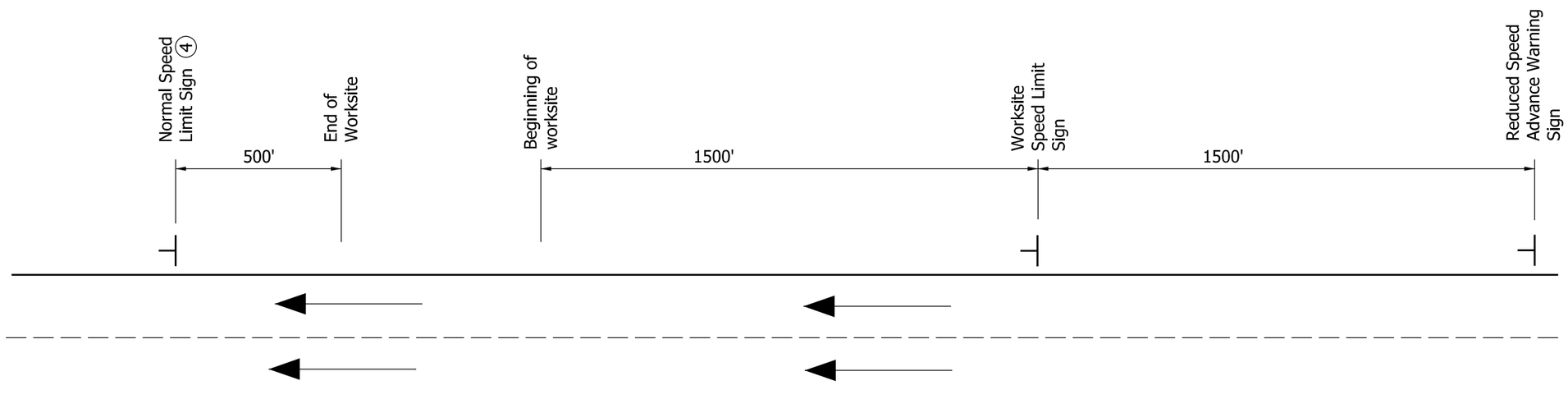

NOTES:

1. Worksite speed limit sign assemblies shall be placed on both sides of the roadway only where all travel lanes approaching the construction site are open to traffic traveling in the same direction.

2. Worksite speed limit sign assemblies shall be placed 500 ft beyond each crossroad or the last entrance ramp for each interchange, at 2-mile intervals throughout the worksite, or adjacent to the existing normal speed limit signs.

3. See Standard Drawings E 801-TCDV-10 and -11 for additional notes on assembly requirements.

④ For a rural Interstate route application, a truck speed limit sign shall be used and placed immediately to the right of the normal speed limit sign.

INDIANA DEPARTMENT OF TRANSPORTATION

WORKSITE SPEED LIMIT SIGN ASSEMBLY LONGITUDINAL PLACEMENT

SEPTEMBER 2012

STANDARD DRAWING NO. E 801-TCDV-12

RICHARD L. VanCLEAVE REGISTERED No. 9750 STATE OF INDIANA PROFESSIONAL ENGINEER

/s/ Richard L. VanCleave 09/04/12
SUPERVISOR, ROADWAY STANDARDS DATE

/s/ Mark A. Miller 09/04/12
CHIEF ENGINEER DATE

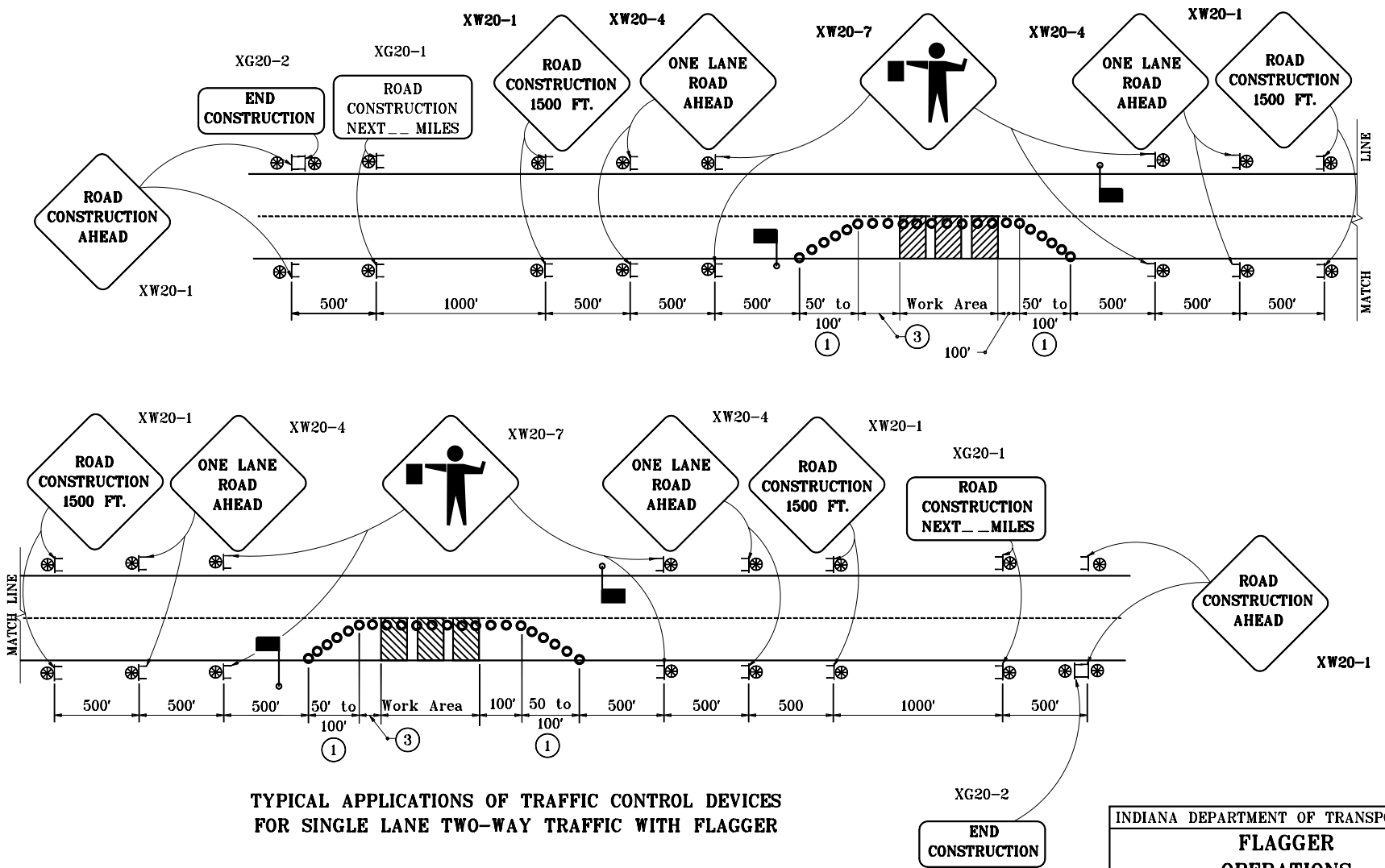

TYPICAL APPLICATIONS OF TRAFFIC CONTROL DEVICES FOR SINGLE LANE TWO-WAY TRAFFIC WITH FLAGGER

GENERAL NOTES

(1) Spacing of drums at this location shall be 10 ft for a 50 ft taper or 20 ft for a 100 ft taper.

2. See Standard Drawing E 801-TCLG-01 for standard notes and legend.

(3) Longitudinal buffer length. See Standard Drawing E 801-TCFO-03 for table this dimension.

INDIANA DEPARTMENT OF TRANSPORTATION

FLAGGER OPERATIONS

SEPTEMBER 1997

STANDARD DRAWING NO. **E 801-TCFO-01**

ANTHONY L. UREMOVICH REGISTERED No. 18095 STATE OF INDIANA PROFESSIONAL ENGINEER

DESIGN STANDARDS ENGINEER

DETAILS PLACED IN THIS FORMAT 11-15-99

/s/ Anthony L. Uremovich 11-15-99
DESIGN STANDARDS ENGINEER DATE

/s/ Firooz Zandi 11-15-99
CHIEF HIGHWAY ENGINEER DATE

ORIGINALLY APPROVED 9-01-97

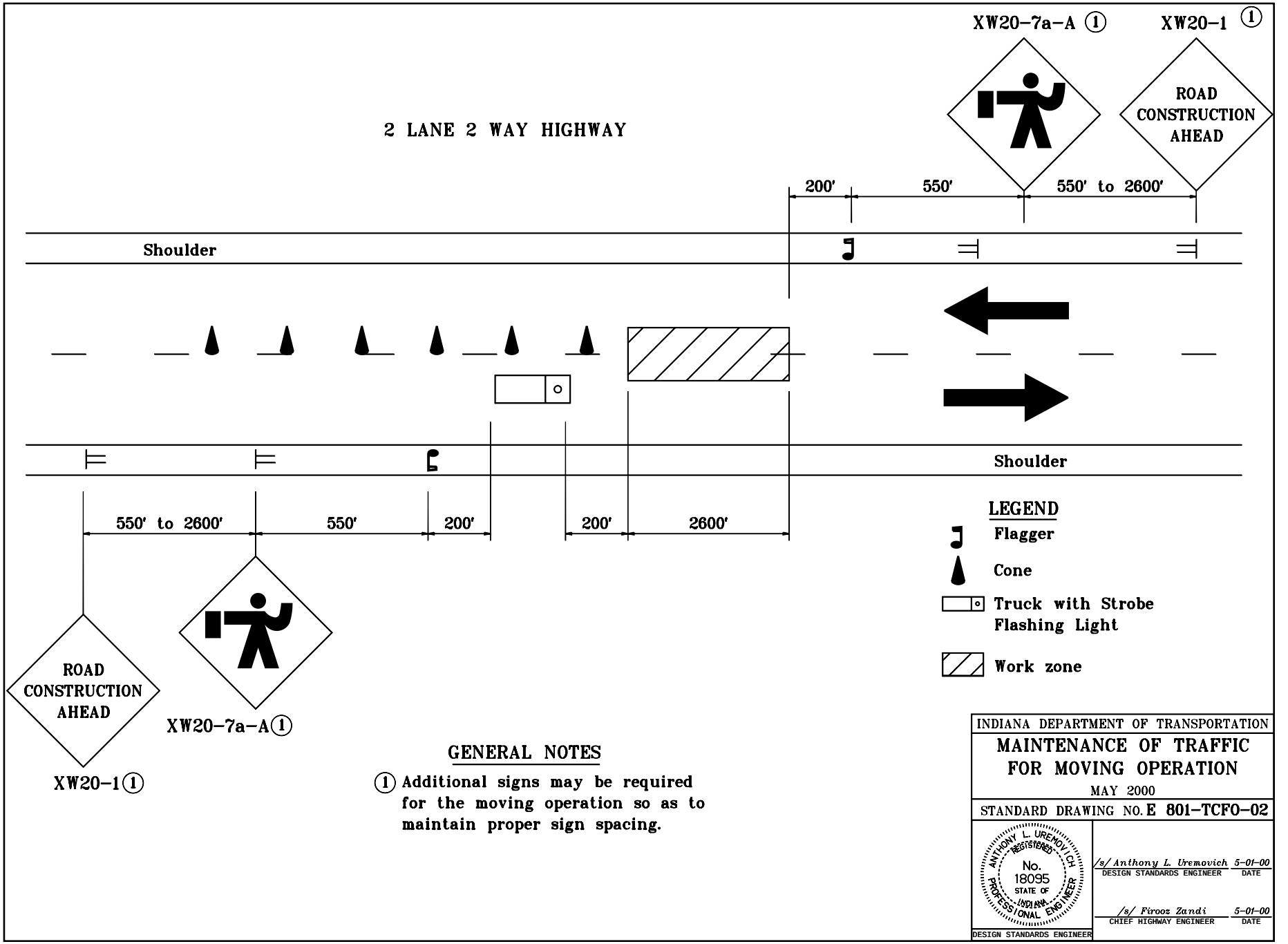

GENERAL NOTES

(1) Additional signs may be required for the moving operation so as to maintain proper sign spacing.

INDIANA DEPARTMENT OF TRANSPORTATION

MAINTENANCE OF TRAFFIC FOR MOVING OPERATION

MAY 2000

STANDARD DRAWING NO. E 801-TCFO-02

ANTHONY L. UREMOVICH REGISTERED No. 18095 STATE OF INDIANA PROFESSIONAL ENGINEER

DESIGN STANDARDS ENGINEER

/s/ Anthony L. Uremovich 5-01-00
DESIGN STANDARDS ENGINEER — DATE

/s/ Firooz Zandi 5-01-00
CHIEF HIGHWAY ENGINEER — DATE

MULTI-LANE DIVIDED HIGHWAY

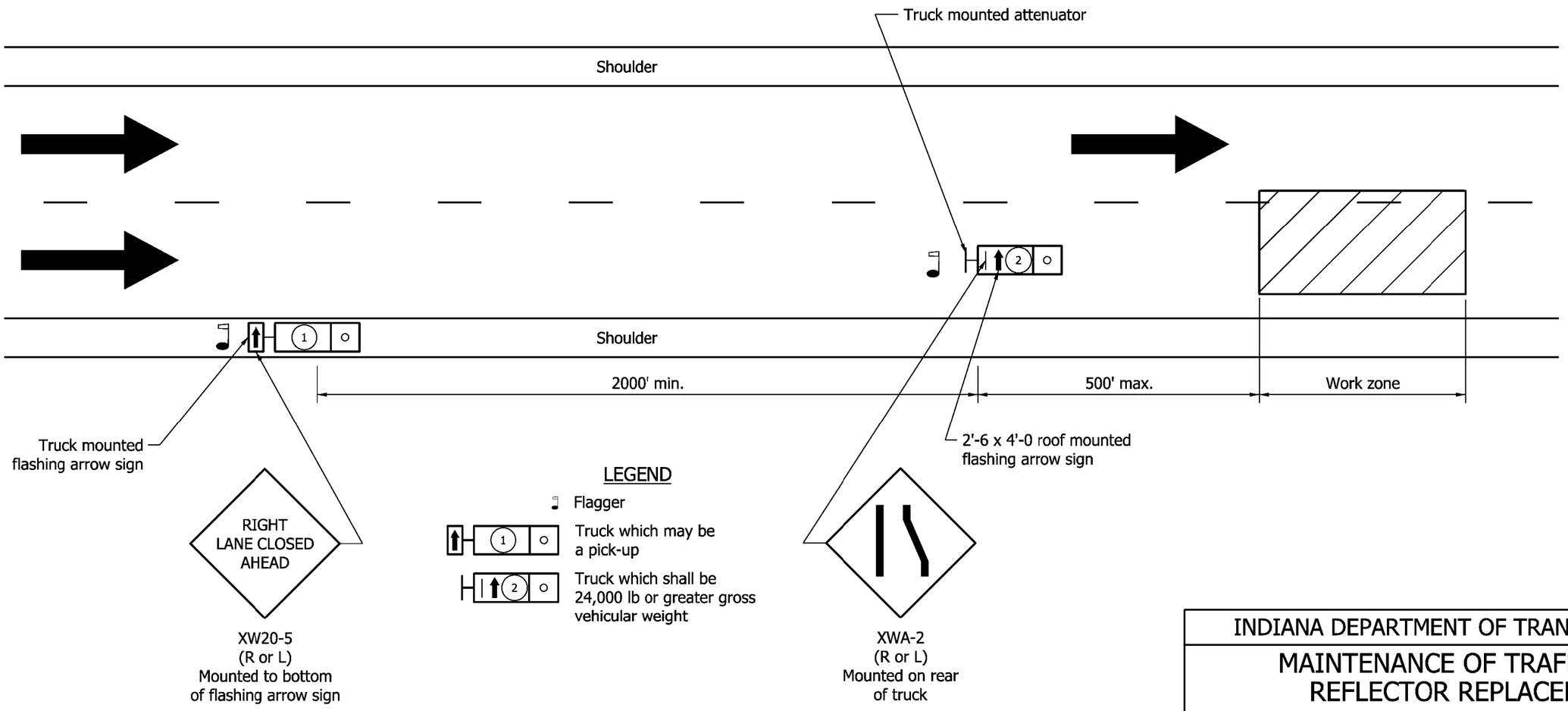

LEGEND

- Flagger
- Truck which may be a pick-up
- Truck which shall be 24,000 lb or greater gross vehicular weight

GENERAL NOTES

1. Flagger shall be used while trucks are stopped.
2. Strobe lights will be require on all vehicles.
3. Distances shown are approximate and may be adjusted as directed.
4. Truck mounted attenuator shall be designed to attenuator impacts by a pickup truck of 4400 lbs. gross vehicular weight at 60 mph.

LONGITUDINAL BUFFER LENGTH SHOWN ON STANDARD DRAWING E 801-TCFO-01

Posted Speed Limit, mph	Length, ft
30 or lower	80
35	115
40	180
45	230
50	280
55	350
60	410
65	500

INDIANA DEPARTMENT OF TRANSPORTATION

MAINTENANCE OF TRAFFIC FOR REFLECTOR REPLACEMENT

SEPTEMBER 2009

STANDARD DRAWING NO. E 801-TCFO-03

RICHARD L. VanCLEAVE REGISTERED No. 9750 STATE OF INDIANA PROFESSIONAL ENGINEER

DESIGN STANDARDS ENGINEER

/s/ Richard L. VanCleave 09/01/09
DESIGN STANDARDS ENGINEER DATE

/s/ Mark A. Miller 09/01/09
CHIEF HIGHWAY ENGINEER DATE

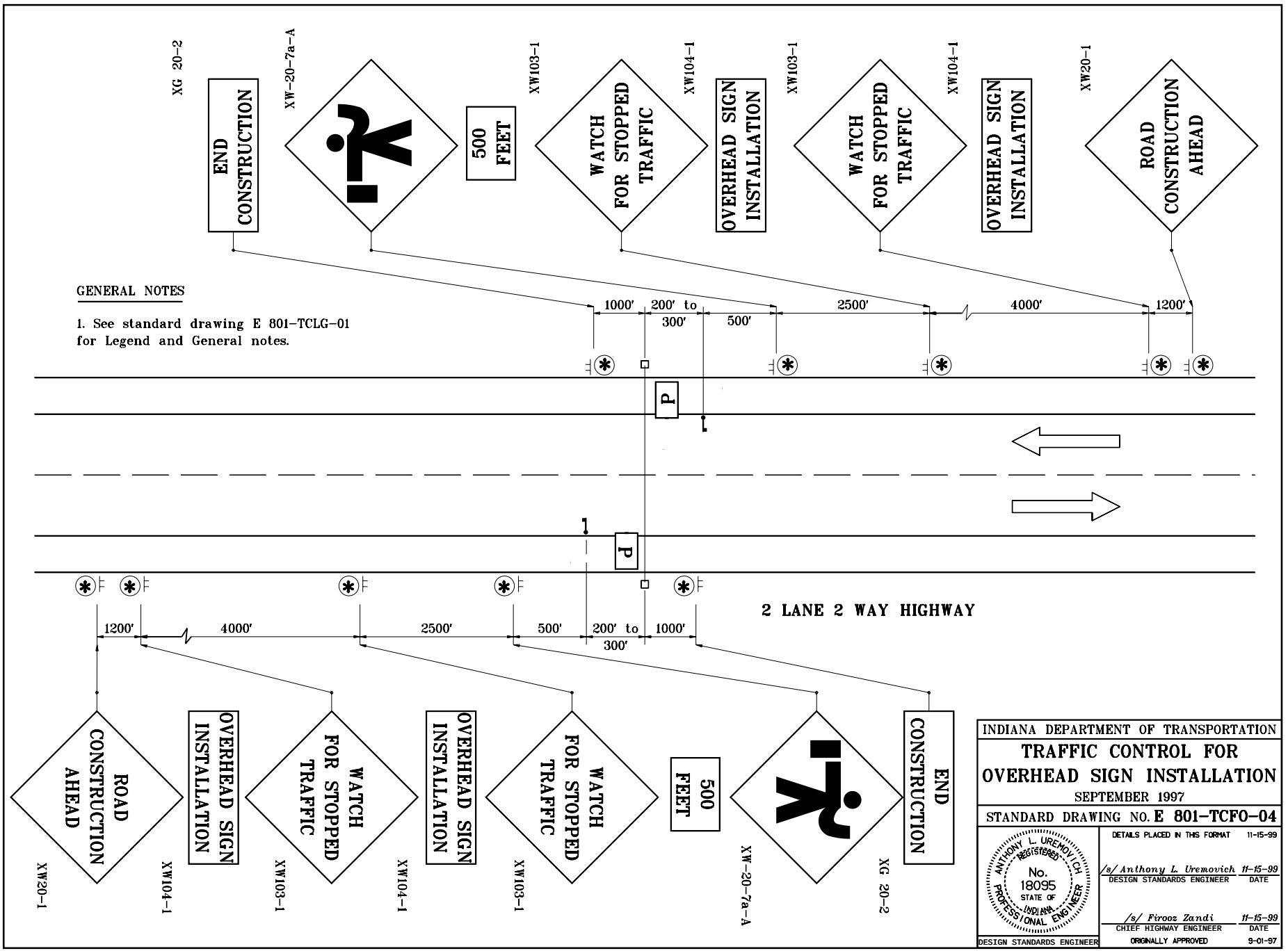

GENERAL NOTES

1. See standard drawing E 801-TCLG-01 for Legend and General notes.

INDIANA DEPARTMENT OF TRANSPORTATION

TRAFFIC CONTROL FOR OVERHEAD SIGN INSTALLATION

SEPTEMBER 1997

STANDARD DRAWING NO. **E 801-TCFO-04**

ANTHONY L. UREMOVICH REGISTERED No. 18095 STATE OF INDIANA PROFESSIONAL ENGINEER

DESIGN STANDARDS ENGINEER

DETAILS PLACED IN THIS FORMAT 11-15-99

/s/ Anthony L. Uremovich 11-15-99
DESIGN STANDARDS ENGINEER DATE

/s/ Firooz Zandi 11-15-99
CHIEF HIGHWAY ENGINEER DATE

ORIGINALLY APPROVED 9-01-97

GENERAL NOTES

1. See standard drawing E 801-TCLG-01 for legend and General notes.

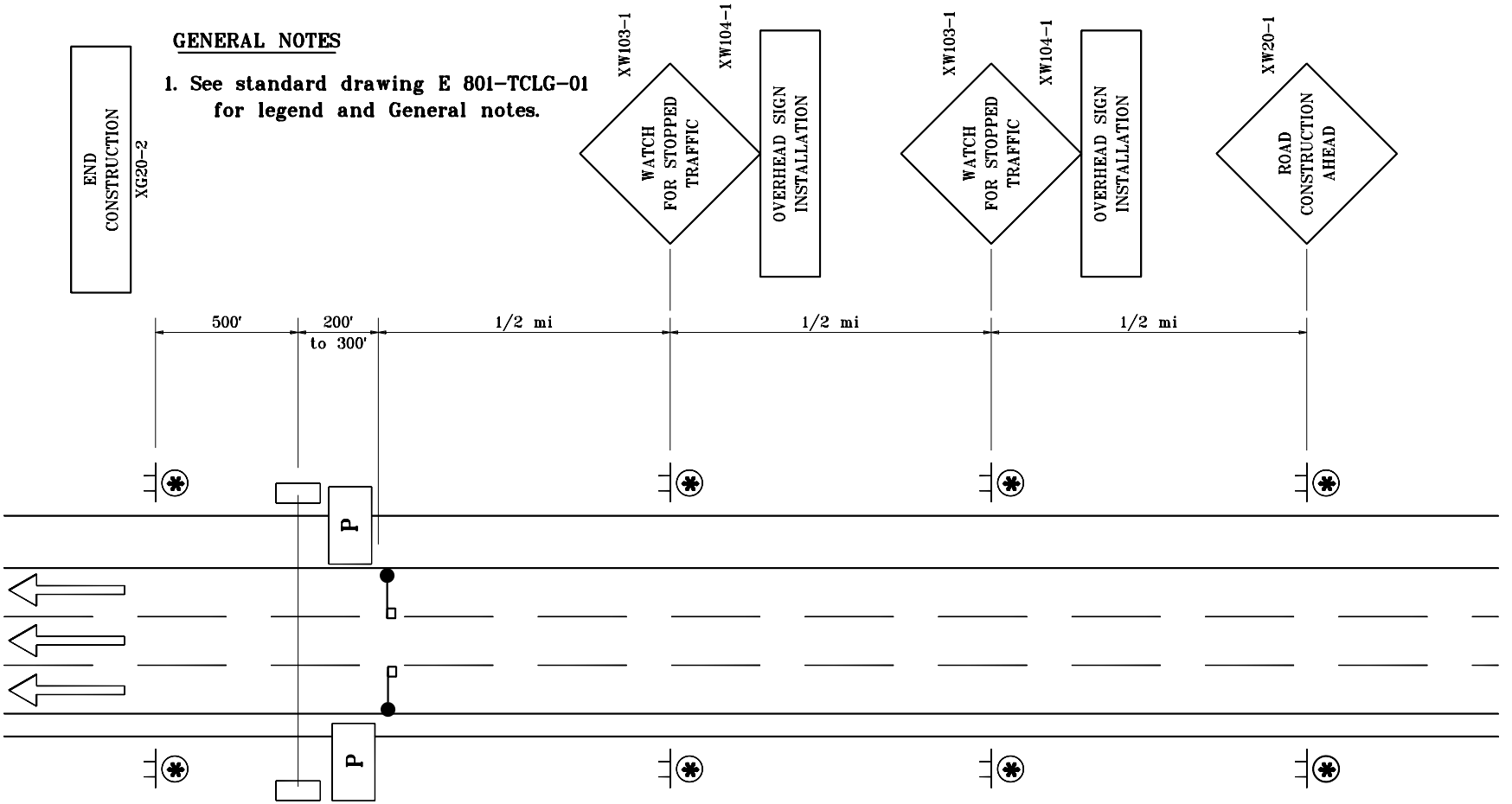

MULTI-LANE DIVIDED HIGHWAY

INDIANA DEPARTMENT OF TRANSPORTATION

TRAFFIC CONTROL FOR OVERHEAD INSTALLATION

SEPTEMBER 1997

STANDARD DRAWING NO. E 801-TCFO-05

ANTHONY L. UREMOVICH REGISTERED No. 18095 STATE OF INDIANA PROFESSIONAL ENGINEER

DESIGN STANDARDS ENGINEER

DETAILS PLACED IN THIS FORMAT 11-15-99

/s/ Anthony L. Uremovich 11-15-99
DESIGN STANDARDS ENGINEER DATE

/s/ Firooz Zandi 11-15-99
CHIEF HIGHWAY ENGINEER DATE

ORIGINALLY APPROVED 9-01-97

GENERAL NOTES

1. See Standard Drawing E 801-TCLG-01 for Legend and General Notes.

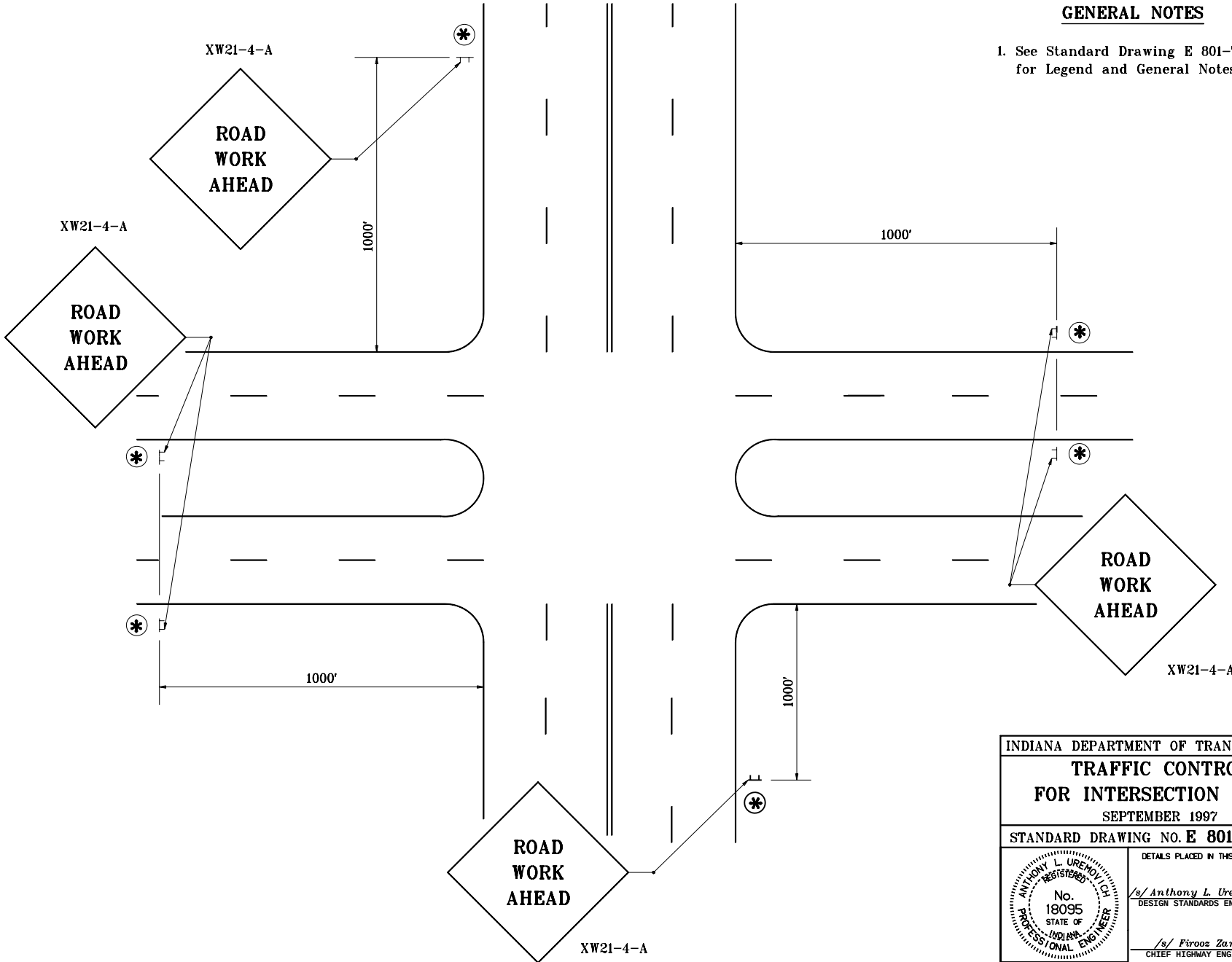

INDIANA DEPARTMENT OF TRANSPORTATION

TRAFFIC CONTROL FOR INTERSECTION WORK

SEPTEMBER 1997

STANDARD DRAWING NO. **E 801-TCFO-06**

ANTHONY L. URENOVICH REGISTERED No. 18095 STATE OF INDIANA PROFESSIONAL ENGINEER

DESIGN STANDARDS ENGINEER

DETAILS PLACED IN THIS FORMAT 11-15-99

/s/ Anthony L. Uremovich 11-15-99
DESIGN STANDARDS ENGINEER DATE

/s/ Firooz Zandi 11-15-99
CHIEF HIGHWAY ENGINEER DATE

ORIGINALLY APPROVED 9-02-97

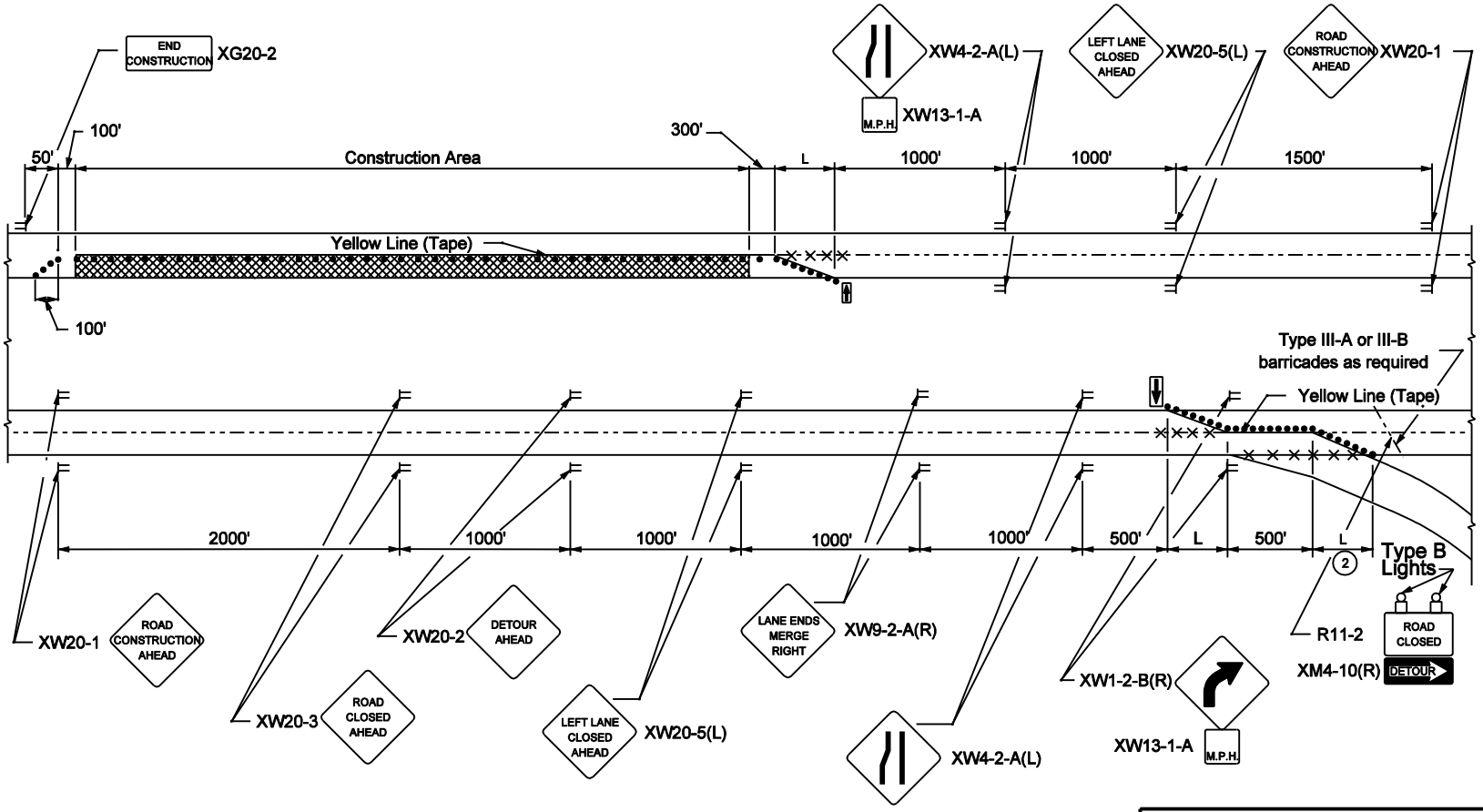

TYPICAL APPLICATION OF TRAFFIC CONTROL DEVICES ON INTERSTATE HIGHWAYS

INDIANA DEPARTMENT OF TRANSPORTATION

LANE CLOSURES INTERSTATE APPLICATIONS

SEPTEMBER 2002

STANDARD DRAWING NO. E 801-TCLC-01

REGISTERED RICHARD L. VANCLEAVE No. 9750 STATE OF INDIANA PROFESSIONAL ENGINEER

DESIGN STANDARDS ENGINEER

/s/ Richard L VanCleave 9-03-02
DESIGN STANDARDS ENGINEER DATE

/s/ Richard K. Smutzer 9-03-02
CHIEF HIGHWAY ENGINEER DATE

GENERAL NOTES

1 See Standard Drawing E 801-TCLG-01 for standard notes and legend.

(2) Spacing of drums at this location shall be 20 ft.

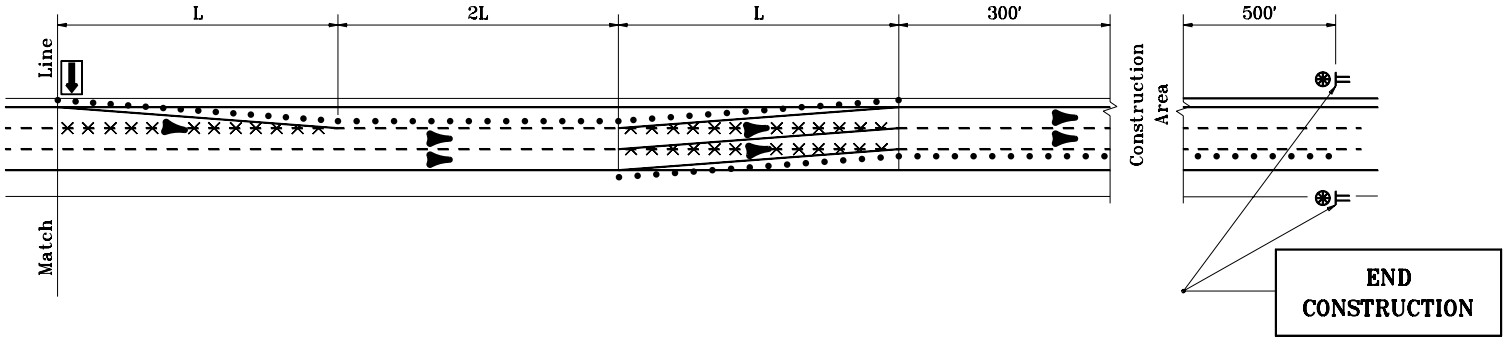

TYPICAL APPLICATION ON 6 – LANE DIVIDED HIGHWAY WHERE RIGHT LANE IS CLOSED

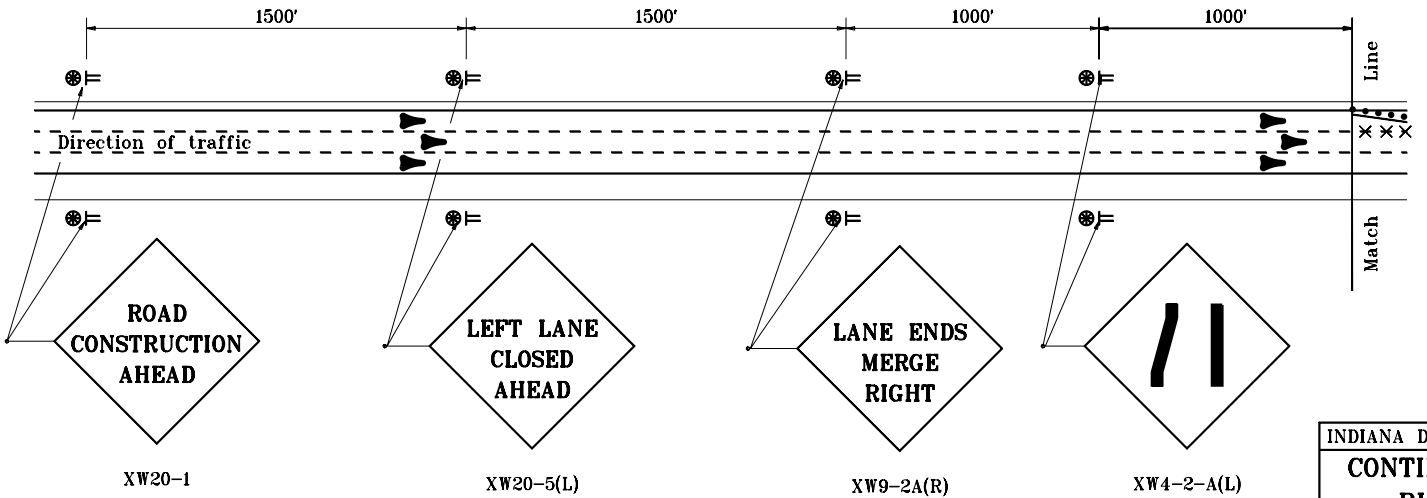

TYPICAL ADVANCE SIGNING

GENERAL NOTES

1. See Standard Drawing E 801-TCLG-01 for standard notes and legend.

INDIANA DEPARTMENT OF TRANSPORTATION

CONTINOUS LANE CLOSURES RIGHT LANE CLOSED

MAY 1997

STANDARD DRAWING NO. E 801-TCLC-02

ANTHONY L. UREMOVICH REGISTERED No. 18095 STATE OF INDIANA PROFESSIONAL ENGINEER

DESIGN STANDARDS ENGINEER

DETAILS PLACED IN THIS FORMAT	11-15-99
/s/ Anthony L. Uremovich DESIGN STANDARDS ENGINEER	11-15-99 DATE
/s/ Firooz Zandi CHIEF HIGHWAY ENGINEER	11-15-99 DATE
ORIGINALLY APPROVED	5-01-97

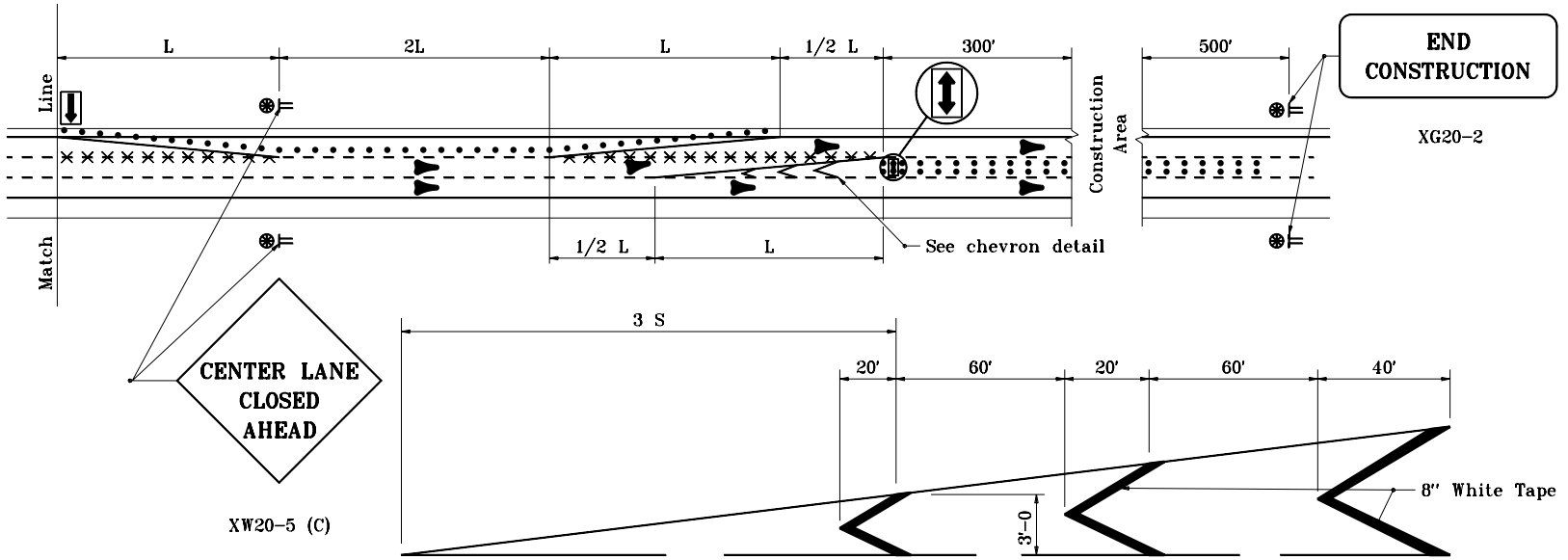

GORE AREA CHEVRONS FOR CENTER LANE CLOSURE

TYPICAL APPLICATION ON 6 - LANE DIVIDED HIGHWAY WHERE CENTER LANE IS CLOSED

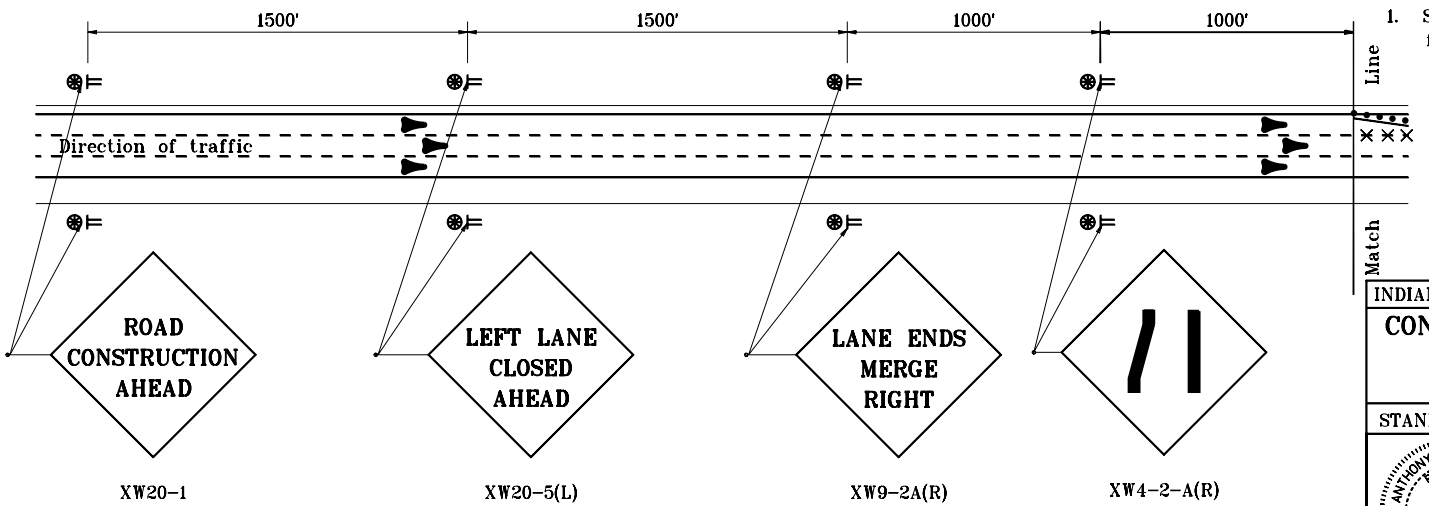

TYPICAL ADVANCE SIGNING

GENERAL NOTES

1. See Standard Drawing E 801-TCLG-01 for standard notes and legend.

INDIANA DEPARTMENT OF TRANSPORTATION

CONTINUOUS LANE CLOSURES
CENTER LANE CLOSED

MAY 1997

STANDARD DRAWING NO. **E 801-TCLC-03**

ANTHONY L. URENOVICH REGISTERED No. 18095 STATE OF INDIANA PROFESSIONAL ENGINEER

DESIGN STANDARDS ENGINEER

DETAILS PLACED IN THIS FORMAT	11-15-99
/s/ Anthony L. Uremovich	11-15-99
DESIGN STANDARDS ENGINEER	DATE
/s/ Firooz Zandi	11-15-99
CHIEF HIGHWAY ENGINEER	DATE
ORIGINALLY APPROVED	5-01-97

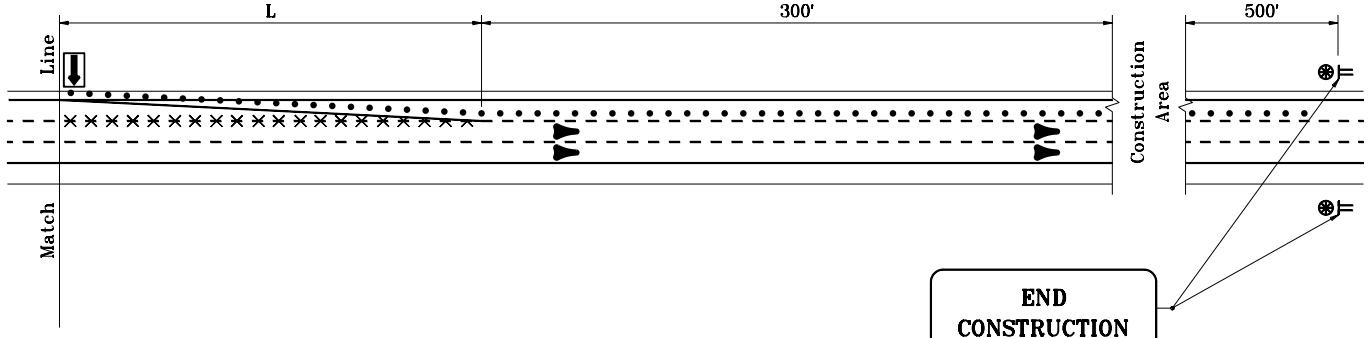

TYPICAL APPLICATION ON 6 – LANE DIVIDED HIGHWAY WHERE LEFT LANE IS CLOSED

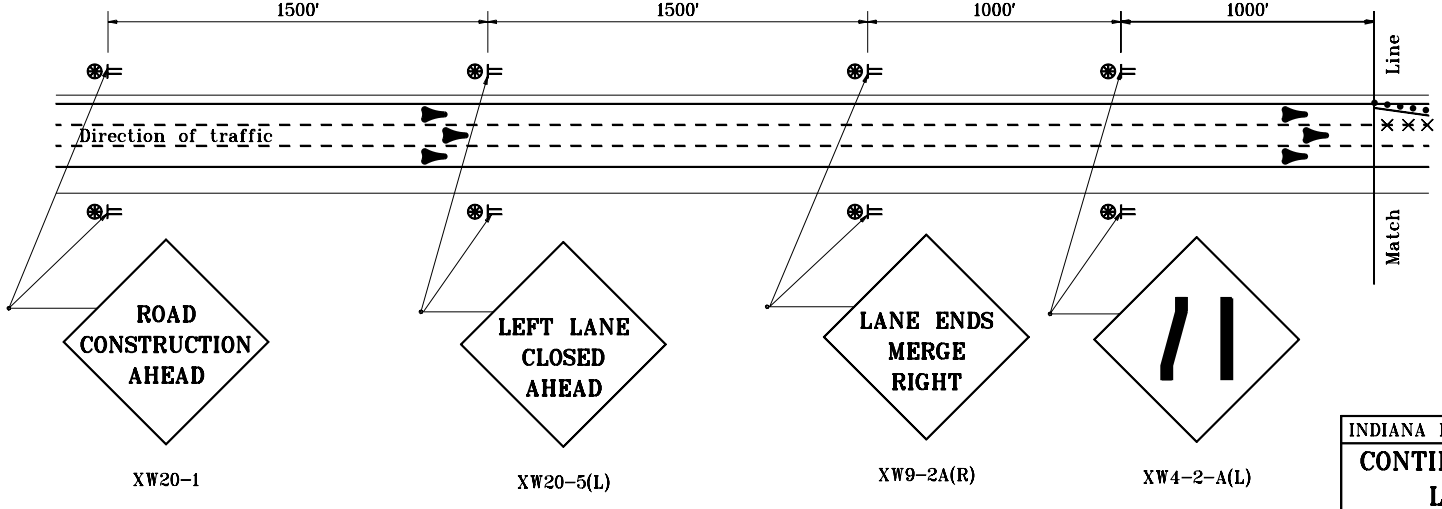

TYPICAL ADVANCE SIGNING

GENERAL NOTES

1. See Standard Drawing E 801-TCLG-01 for standard notes and legend.

INDIANA DEPARTMENT OF TRANSPORTATION

CONTINUOUS LANE CLOSURES
LEFT LANE CLOSED

JANUARY 2000

STANDARD DRAWING NO. **E 801-TCLC-04**

ANTHONY L. UREMOVICH REGISTERED No. 18095 STATE OF INDIANA PROFESSIONAL ENGINEER

DESIGN STANDARDS ENGINEER

/s/ Anthony L. Uremovich 5-01-97
DESIGN STANDARDS ENGINEER DATE

/s/ Donald W. Lucas 5-01-97
CHIEF HIGHWAY ENGINEER DATE

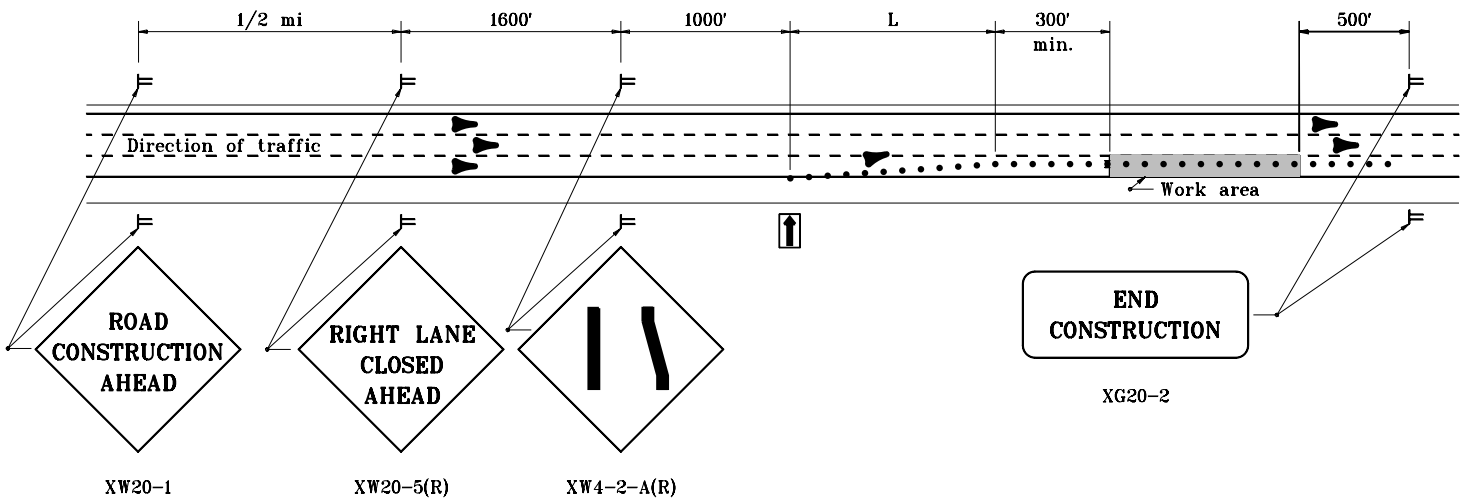

TYPICAL APPLICATION ON 6 – LANE DIVIDED HIGHWAY WHERE RIGHT LANE IS CLOSED

GENERAL NOTES

1. All lanes are to be open after daylight working hours.
2. See Standard Drawiog E 801–TCLG–01 for standard notes and legend.

INDIANA DEPARTMENT OF TRANSPORTATION

DAYLIGHT LANE CLOSURES
RIGHT LANE CLOSED
MAY 1997

STANDARD DRAWING NO. **E 801–TCLC–05**

ANTHONY L. UREMOVICH REGISTERED No. 18095 STATE OF INDIANA PROFESSIONAL ENGINEER

DESIGN STANDARDS ENGINEER

DETAILS PLACED IN THIS FORMAT 11-15-99

/s/ Anthony L. Uremovich 11-15-99
DESIGN STANDARDS ENGINEER DATE

/s/ Firooz Zandi 11-15-99
CHIEF HIGHWAY ENGINEER DATE

ORIGINALLY APPROVED 5-01-97

GENERAL NOTES

1. All lanes are to be open after daylight working hours.
2. See Standard Drawing E 801-TCLG-01 for standard notes and legend.

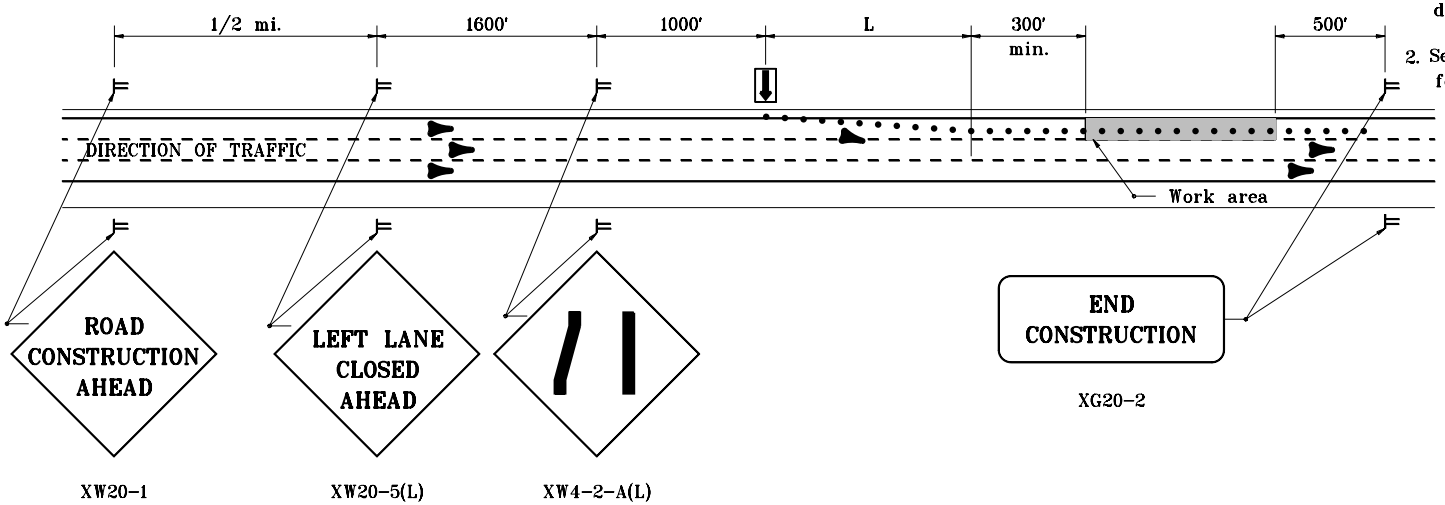

TYPICAL APPLICATION ON 6 - LANE DIVIDED HIGHWAY WHERE LEFT LANE IS CLOSED

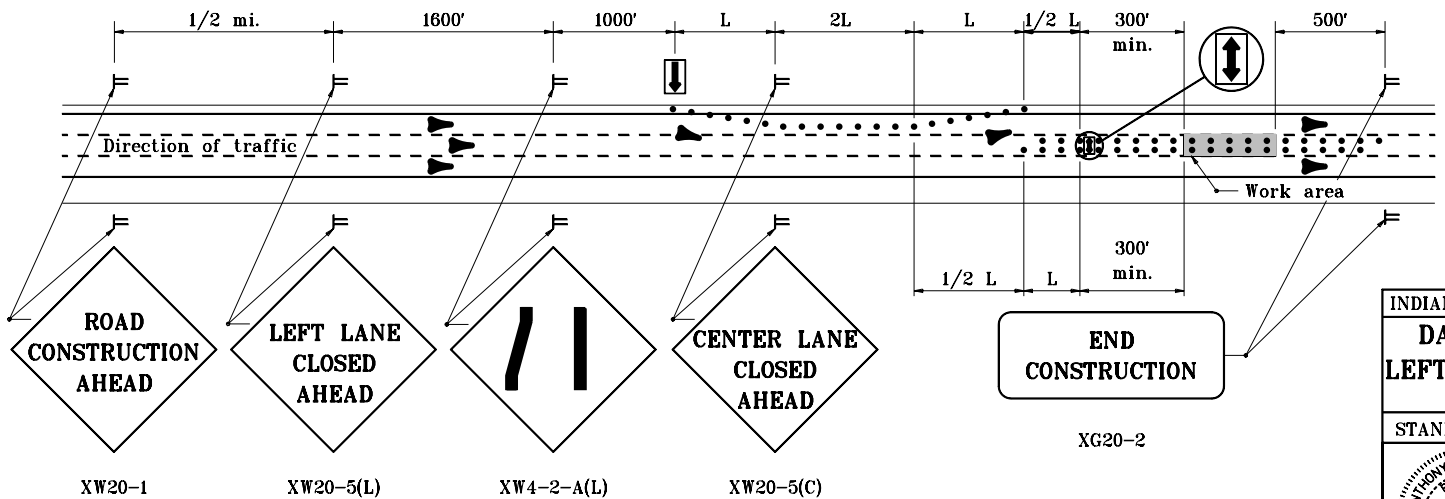

TYPICAL APPLICATION ON 6 - LANE DIVIDED HIGHWAY WHERE CENTER LANE IS CLOSED

INDIANA DEPARTMENT OF TRANSPORTATION

DAYLIGHT LANE CLOSURES LEFT OR CENTER LANE CLOSED

MAY 1997

STANDARD DRAWING NO. **E 801-TCLC-06**

ANTHONY L. UREMOVICH REGISTERED No. 18095 STATE OF INDIANA PROFESSIONAL ENGINEER

DESIGN STANDARDS ENGINEER

DETAILS PLACED IN THIS FORMAT	11-15-99
/s/ Anthony L. Uremovich, DESIGN STANDARDS ENGINEER	11-15-99
/s/ Firooz Zandi, CHIEF HIGHWAY ENGINEER	11-15-99
ORIGINALLY APPROVED	5-01-97

GENERAL NOTES

1. See Standard Drawing E 801-TCLG-01 for Legend and General Notes.

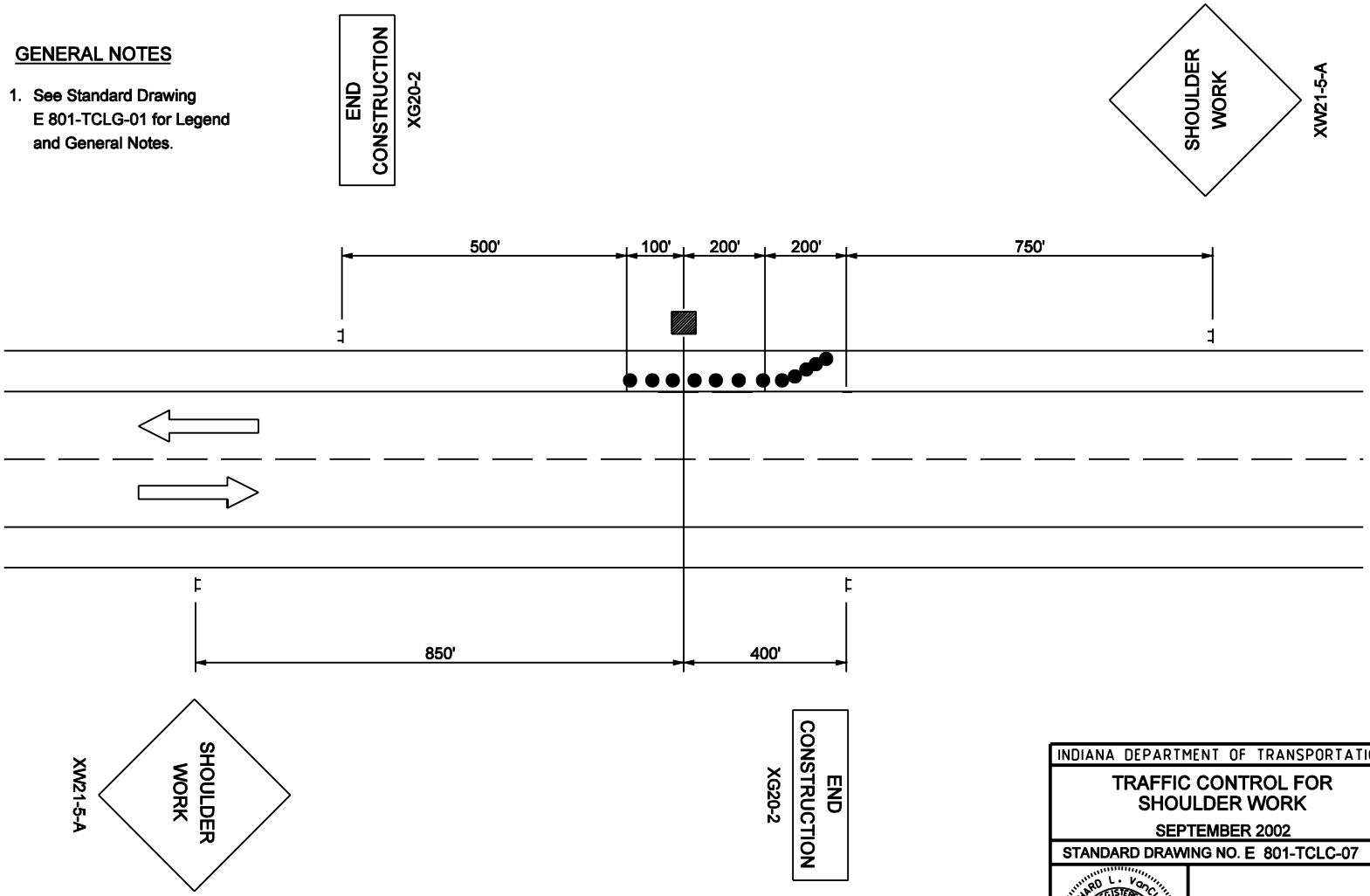

2 LANE 2 WAY HIGHWAY

INDIANA DEPARTMENT OF TRANSPORTATION

TRAFFIC CONTROL FOR SHOULDER WORK

SEPTEMBER 2002

STANDARD DRAWING NO. E 801-TCLC-07

RICHARD L. VANCLEAVE REGISTERED No. 9750 STATE OF INDIANA PROFESSIONAL ENGINEER

DESIGN STANDARDS ENGINEER

/s/ Richard L VanCleave — DESIGN STANDARDS ENGINEER — 9-03-02 DATE

/s/ Richard K. Smutzer — CHIEF HIGHWAY ENGINEER — 9-03-02 DATE

GENERAL NOTES

1. See Standard Drawing E 801-TCLG-01 for Legend and General Notes.

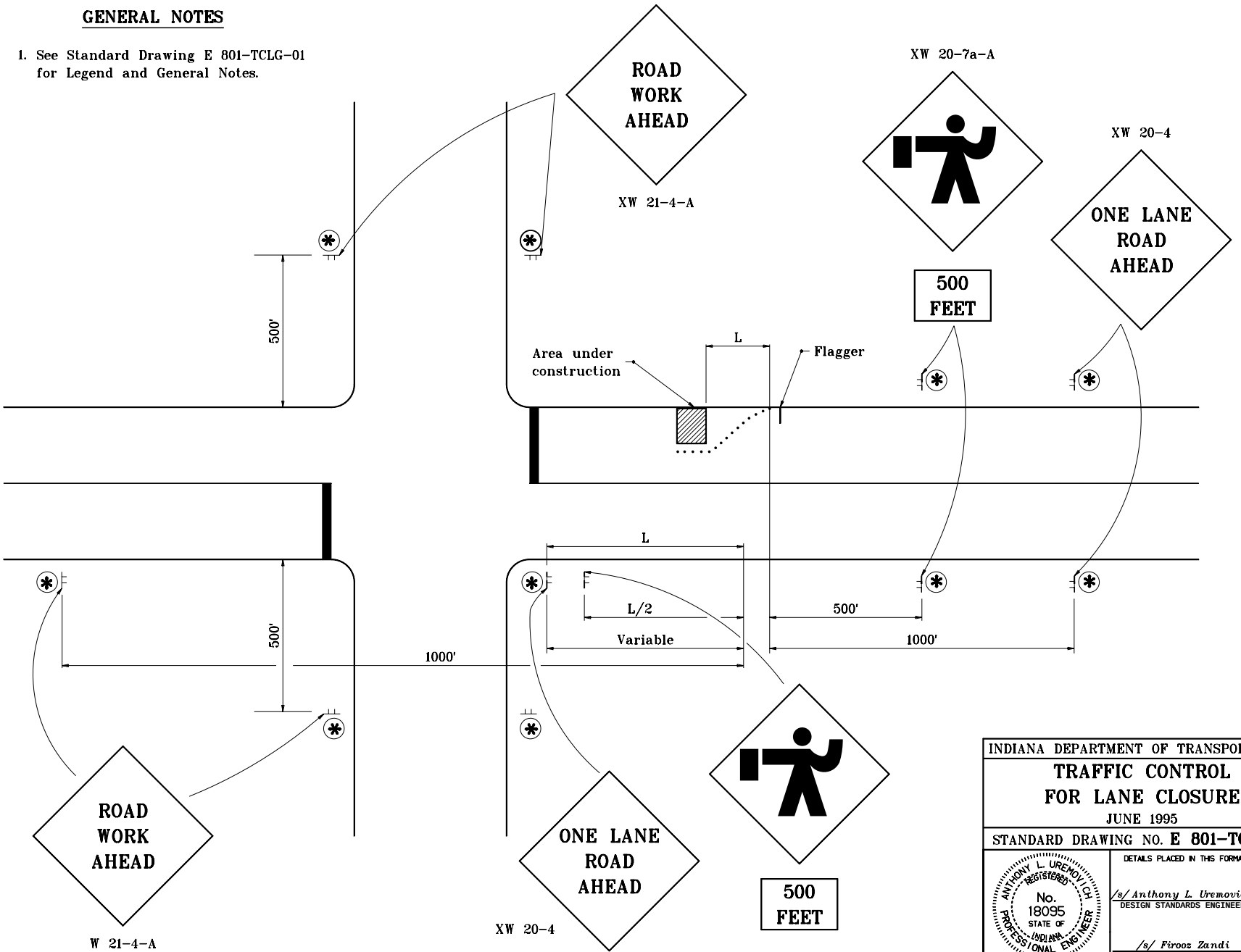

INDIANA DEPARTMENT OF TRANSPORTATION

TRAFFIC CONTROL FOR LANE CLOSURE

JUNE 1995

STANDARD DRAWING NO. **E 801-TCLC-08**

ANTHONY L. UREMOVICH REGISTERED No. 18095 STATE OF INDIANA PROFESSIONAL ENGINEER

DESIGN STANDARDS ENGINEER

DETAILS PLACED IN THIS FORMAT 11-15-99

/s/ Anthony L. Uremovich 11-15-99
DESIGN STANDARDS ENGINEER DATE

/s/ Firooz Zandi 11-15-99
CHIEF HIGHWAY ENGINEER DATE

ORIGINALLY APPROVED 7-03-95

NOTES

1. See Standard Drawing E 801-TCLG-01 for Legend and General Notes.

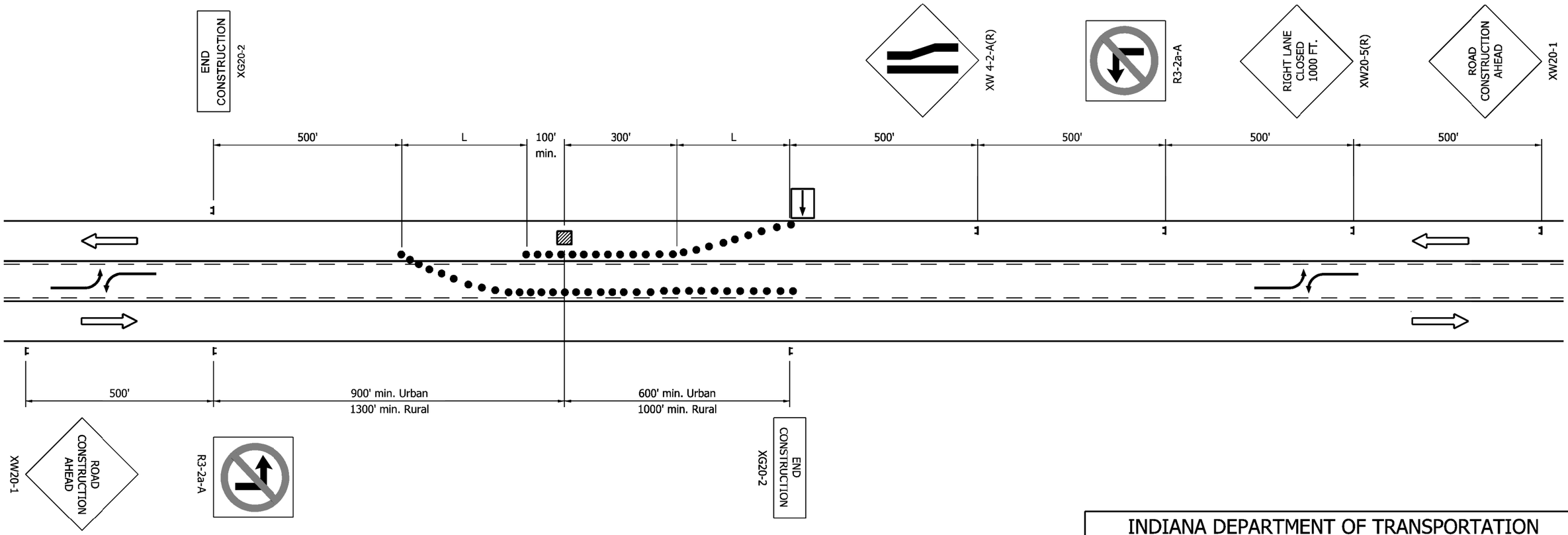

WORK ON PAVEMENT (3 LANE SECTION)

INDIANA DEPARTMENT OF TRANSPORTATION

TRAFFIC CONTROL FOR LANE CLOSURE

SEPTEMBER 2009

STANDARD DRAWING NO. E 801-TCLC-09

RICHARD L. VanCLEAVE
REGISTERED
No. 9750
STATE OF INDIANA
PROFESSIONAL ENGINEER

DESIGN STANDARDS ENGINEER

/s/ Richard L. VanCleave 09/01/09
DESIGN STANDARDS ENGINEER — DATE

/s/ Mark A. Miller 09/01/09
CHIEF HIGHWAY ENGINEER — DATE

GENERAL NOTES

1. See standard drawing E 801-TCLG-01 for legend and General notes.

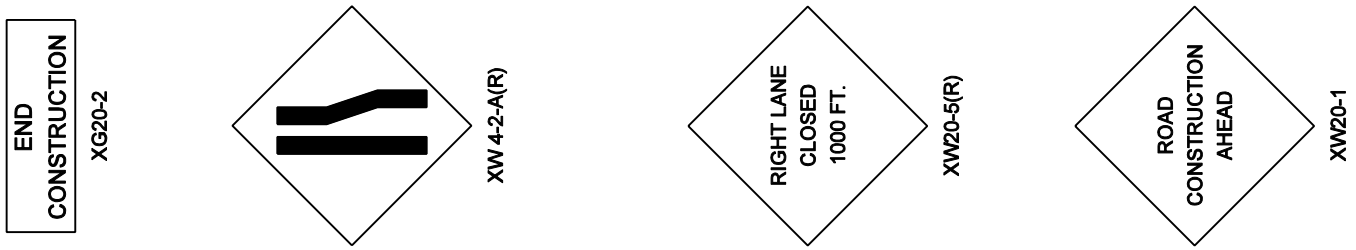

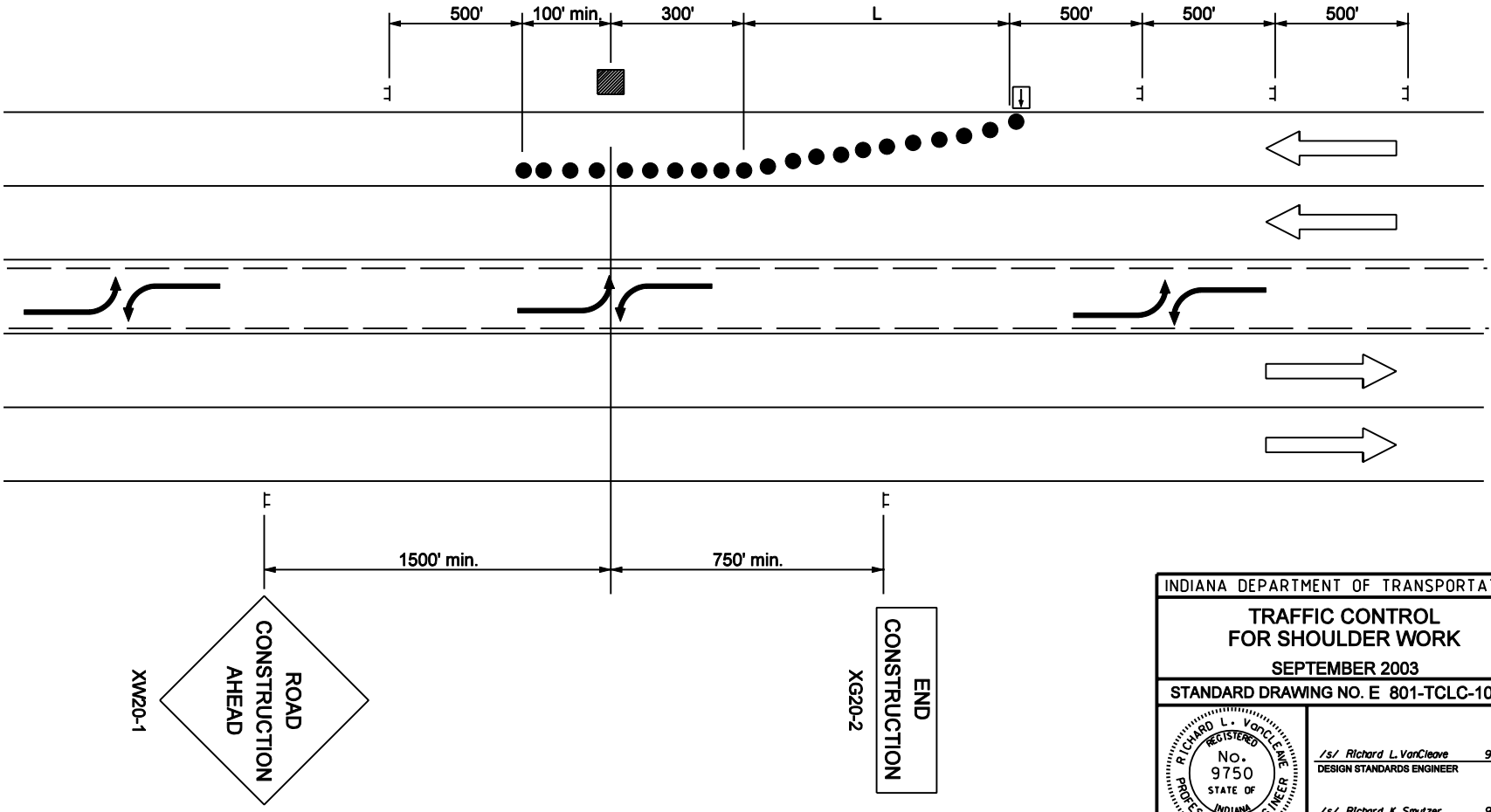

INDIANA DEPARTMENT OF TRANSPORTATION

TRAFFIC CONTROL FOR SHOULDER WORK

SEPTEMBER 2003

STANDARD DRAWING NO. E 801-TCLC-10

RICHARD L. VANCLEAVE REGISTERED No. 9750 STATE OF INDIANA PROFESSIONAL ENGINEER

DESIGN STANDARDS ENGINEER

/s/ Richard L. VanCleave — DESIGN STANDARDS ENGINEER — 9-02-03 DATE

/s/ Richard K. Smutzer — CHIEF HIGHWAY ENGINEER — 9-02-03 DATE

GENERAL NOTES

1. See Standard Drawing E 801-TCLG-01 for additional general notes.

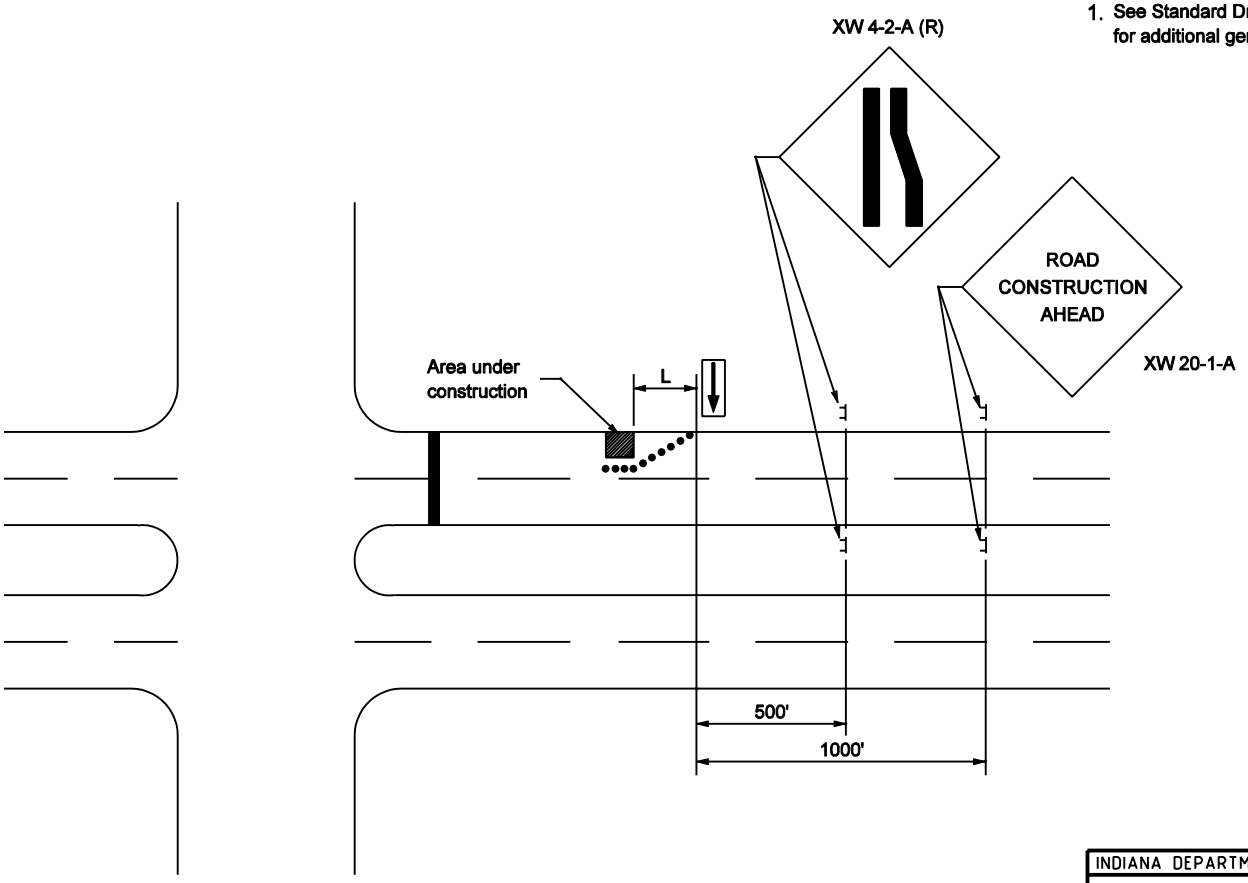

INDIANA DEPARTMENT OF TRANSPORTATION

TRAFFIC CONTROL FOR LANE CLOSURE

SEPTEMBER 2002

STANDARD DRAWING NO. E 801-TCLC-11

RICHARD L. VanCLEAVE REGISTERED No. 9750 STATE OF INDIANA PROFESSIONAL ENGINEER

DESIGN STANDARDS ENGINEER

/s/ Richard L VanCleave — DESIGN STANDARDS ENGINEER — 9-03-02 DATE

/s/ Richard K. Smutzer — CHIEF HIGHWAY ENGINEER — 9-03-02 DATE

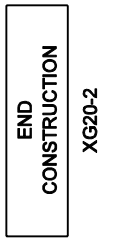

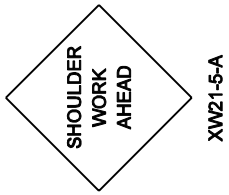

GENERAL NOTES

1. See standard drawing E 801-TCLG-01 for legend and General Notes.

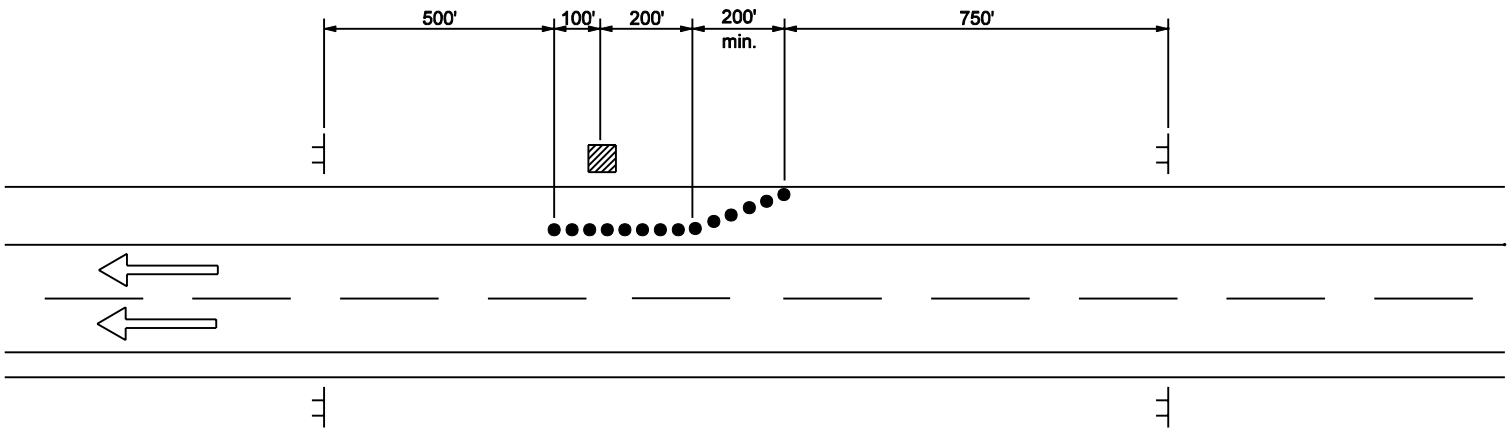

MULTI-LANE DIVIDED HIGHWAY

INDIANA DEPARTMENT OF TRANSPORTATION

TRAFFIC CONTROL FOR SHOULDER WORK

SEPTEMBER 2002

STANDARD DRAWING NO. E 801-TCLC-12



DESIGN STANDARDS ENGINEER

/s/ Richard L. VanCleave 9-03-02
DESIGN STANDARDS ENGINEER DATE

/s/ Richard K. Smutzer 9-03-02
CHIEF HIGHWAY ENGINEER DATE

GENERAL NOTES

1. See Standard Drawing E 801-TCLG-01 for Legend and General Notes.

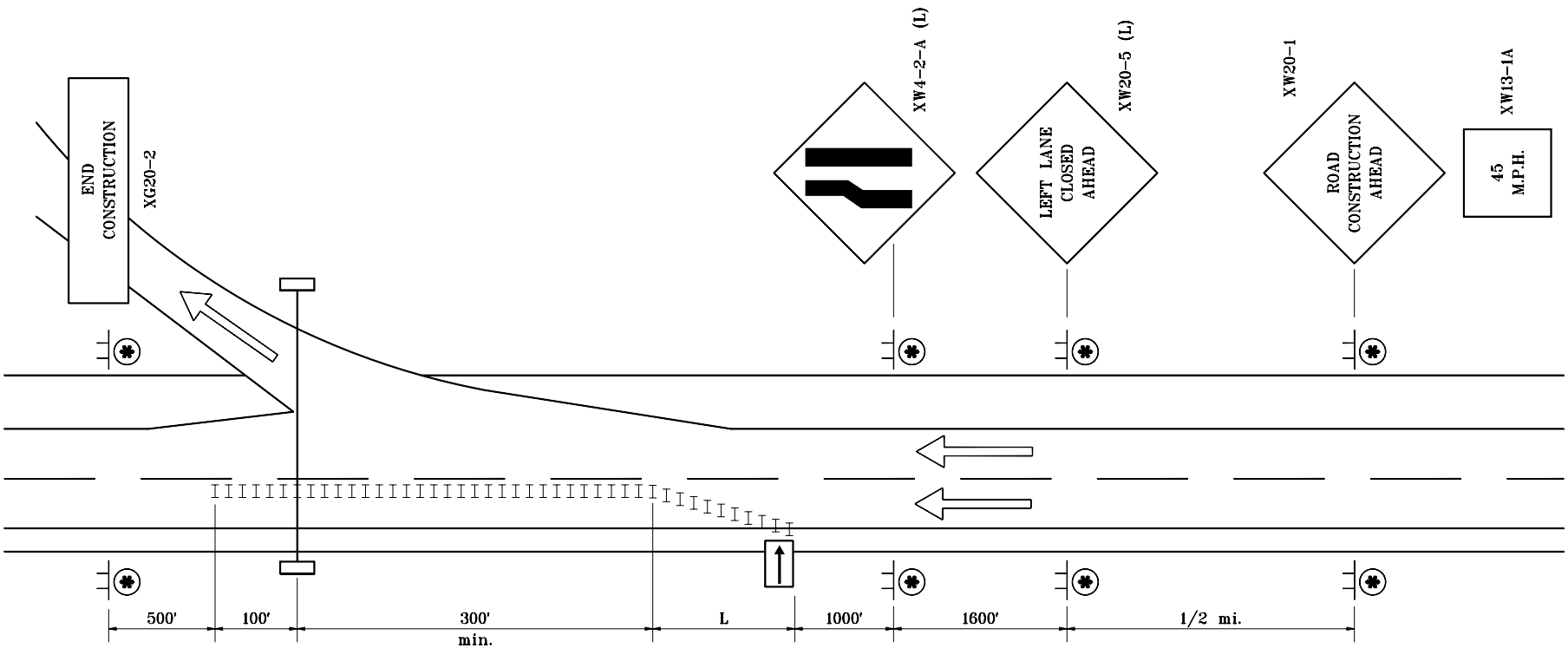

MULTI-LANE DIVIDED HIGHWAY

INDIANA DEPARTMENT OF TRANSPORTATION

TRAFFIC CONTROL FOR OVERHEAD SIGN INSTALLATION

JUNE 1995

STANDARD DRAWING NO. **E 801-TCLC-13**

ANTHONY L. UREMOVICH REGISTERED No. 18095 STATE OF INDIANA PROFESSIONAL ENGINEER

DESIGN STANDARDS ENGINEER

DETAILS PLACED IN THIS FORMAT	11-15-99
/s/ Anthony L. Uremovich DESIGN STANDARDS ENGINEER	11-15-99 DATE
/s/ Firooz Zandi CHIEF HIGHWAY ENGINEER	11-15-99 DATE
ORIGINALLY APPROVED	7-03-95

GENERAL NOTES

1. See Standard Drawing E 801-TCLG-01 for Legend and General Notes.

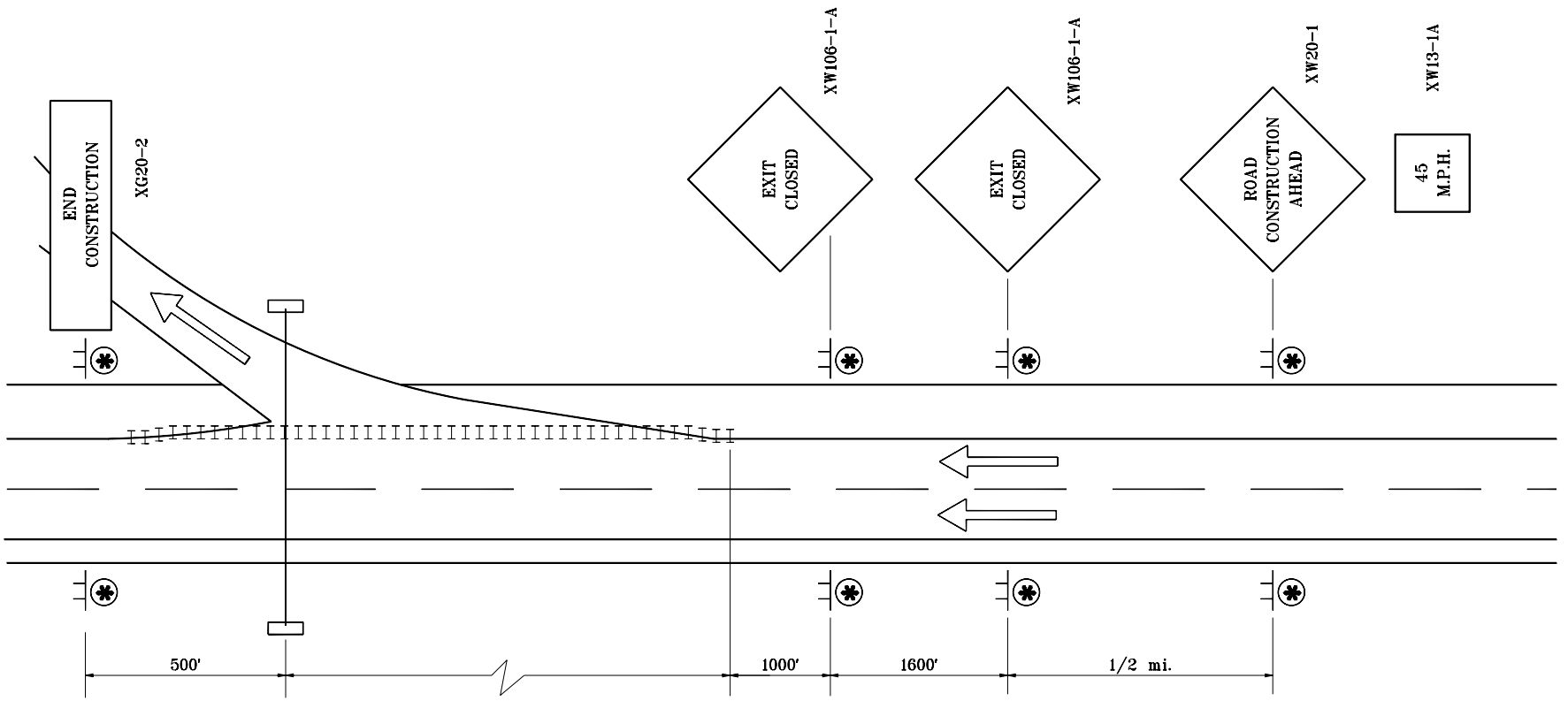

MULTI-LANE DIVIDED HIGHWAY, LONG-TERM CLOSURE

INDIANA DEPARTMENT OF TRANSPORTATION

TRAFFIC CONTROL FOR OVERHEAD SIGN INSTALLATION

JUNE 1995

STANDARD DRAWING NO. **E 801-TCLC-14**

ANTHONY L. UREMOVICH REGISTERED No. 18095 STATE OF INDIANA PROFESSIONAL ENGINEER

DESIGN STANDARDS ENGINEER

DETAILS PLACED IN THIS FORMAT 11-15-99

/s/ Anthony L. Uremovich 11-15-99
DESIGN STANDARDS ENGINEER DATE

/s/ Firooz Zandi 11-15-99
CHIEF HIGHWAY ENGINEER DATE

ORIGINALLY APPROVED 7-03-95

GENERAL NOTES

1. See Standard Drawing E 801-TCLG-01 for Legend and General Notes.

② See General Note 2 on Stanard Drawing E 801-TCLG-01.

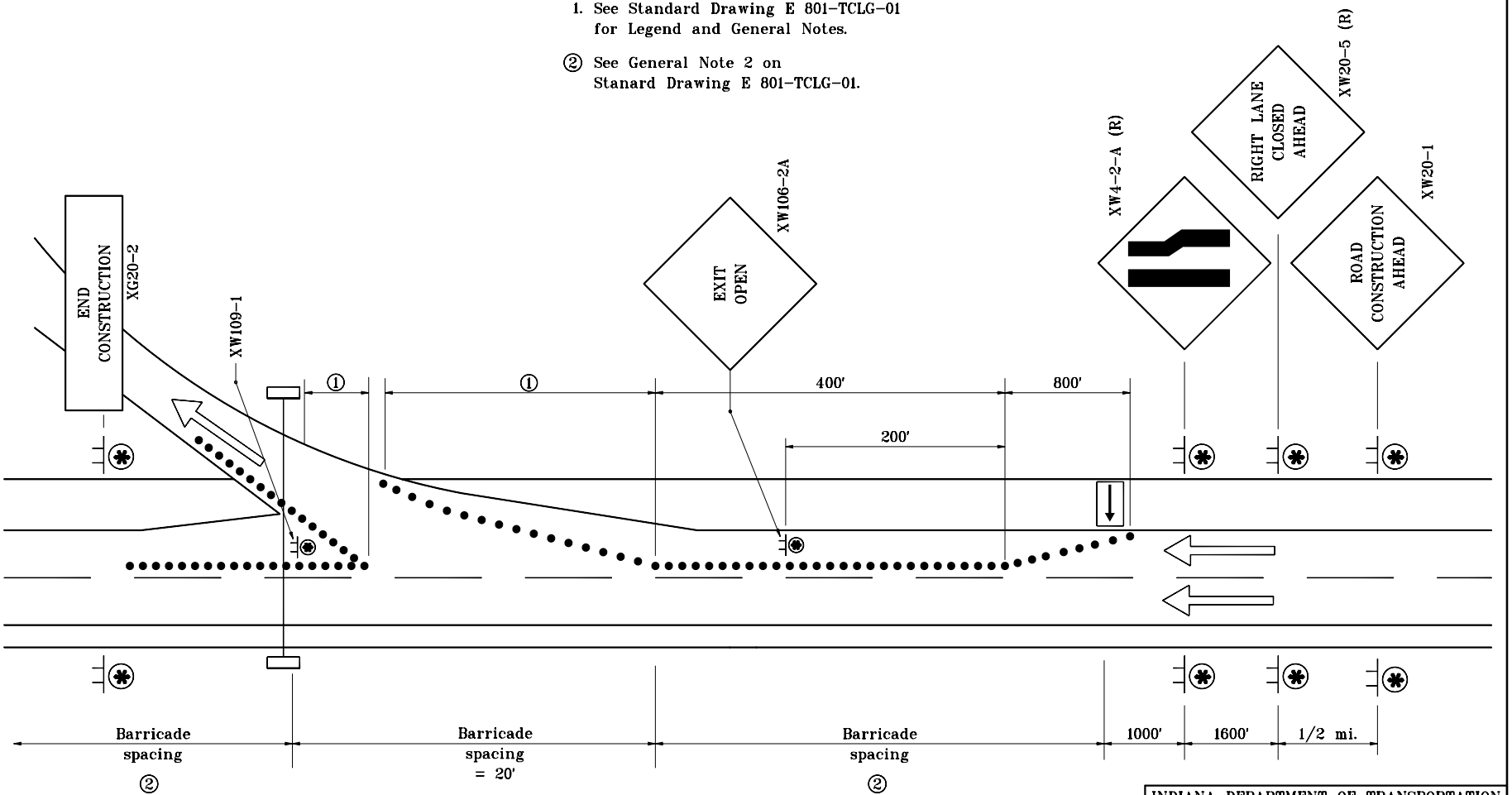

MULTI-LANE DIVIDED HIGHWAY

INDIANA DEPARTMENT OF TRANSPORTATION

TRAFFIC CONTROL FOR OVERHEAD SIGN INSTALLATION

MAY 1998

STANDARD DRAWING NO. **E 801-TCLC-15**

ANTHONY L. UREMOVICH REGISTERED No. 18095 STATE OF INDIANA PROFESSIONAL ENGINEER

DESIGN STANDARDS ENGINEER

DETAILS PLACED IN THIS FORMAT	11-15-99
/s/ Anthony L. Uremovich	11-15-99
DESIGN STANDARDS ENGINEER	DATE
/s/ Firooz Zandi	11-15-99
CHIEF HIGHWAY ENGINEER	DATE
ORGINALLY APPROVED	5-01-98

GENERAL NOTES

1. See Standard Drawing E 801-TCLG-01 for Legend and General Notes.

② See Standard Drawing E 801-TCDV-03 for values of L.

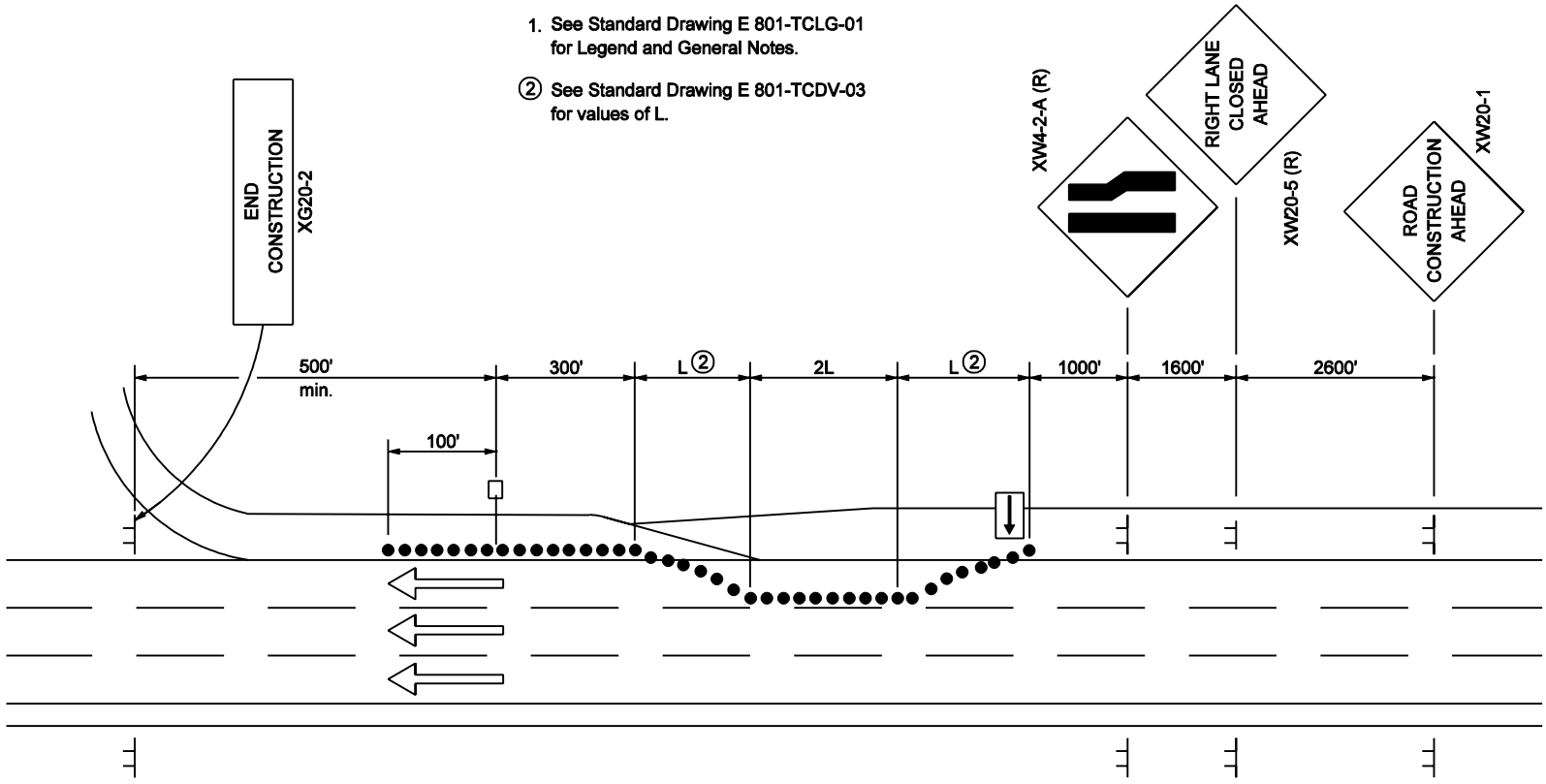

MULTI-LANE DIVIDED HIGHWAY

INDIANA DEPARTMENT OF TRANSPORTATION

TRAFFIC CONTROL FOR LANE CLOSURE

SEPTEMBER 2002

STANDARD DRAWING NO. E 801-TCLC-16

RICHARD L. VanCLEAVE REGISTERED No. 9750 STATE OF INDIANA PROFESSIONAL ENGINEER

DESIGN STANDARDS ENGINEER

/s/ Richard L. VanCleave — DESIGN STANDARDS ENGINEER — 9-03-02 DATE

/s/ Richard K. Smutzer — CHIEF HIGHWAY ENGINEER — 9-03-02 DATE

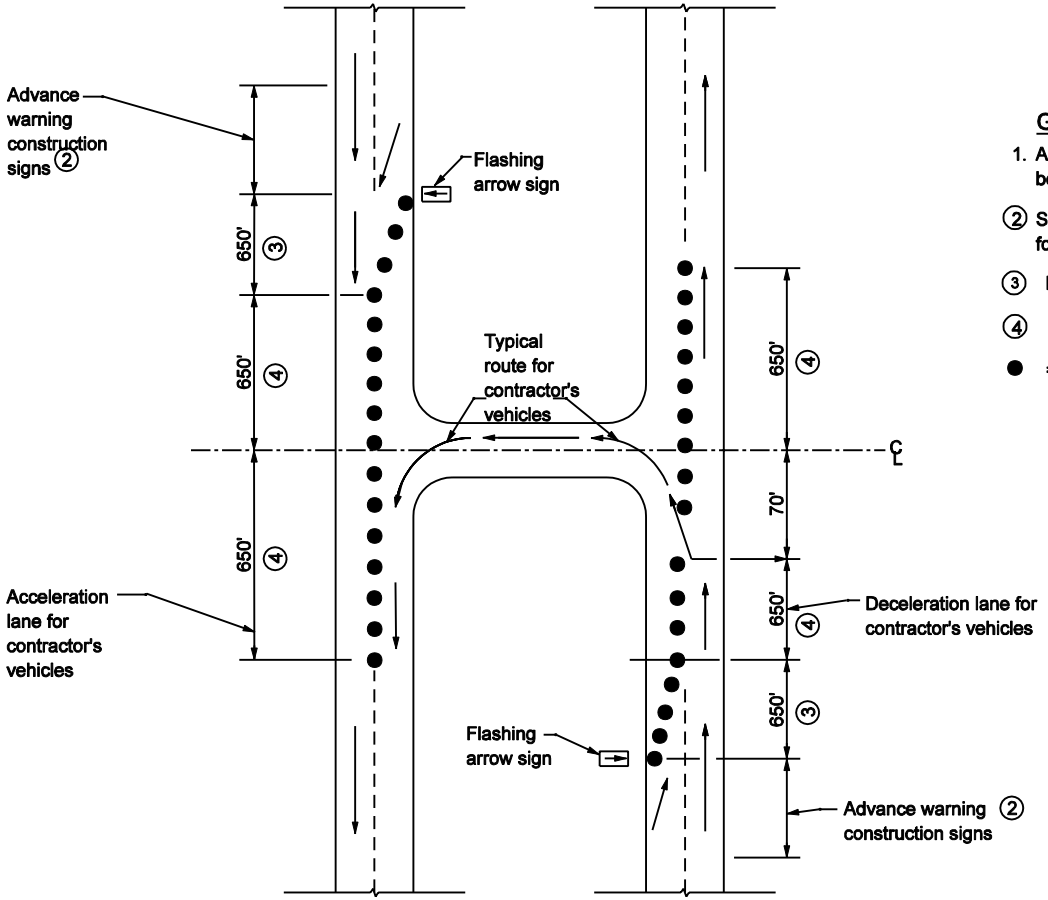

GENERAL NOTES

1. All dimensions not shown shall be field determined.

(2) See Standard Drawing E-801-TCLC-11 for placement of construction signs.

(3) Maximum spacing shall be 50 ft..

(4) Maximum spacing shall be 100 ft..

● = Channelizing Device

INDIANA DEPARTMENT OF TRANSPORTATION

TEMPORARY U-TURN FOR CONTRACTOR'S VEHICLES

SEPTEMBER 2002

STANDARD DRAWING NO. E 801-TCLC-17

RICHARD L. VanCLEAVE REGISTERED No. 9750 STATE OF INDIANA PROFESSIONAL ENGINEER

DESIGN STANDARDS ENGINEER

/s/ Richard L VanCleave 9-03-02
DESIGN STANDARDS ENGINEER DATE

/s/ Richard K. Smutzer 9-03-02
CHIEF HIGHWAY ENGINEER DATE

GENERAL NOTES

① Distances shown are typical except minimum distances may be varied based on field conditions.

2. The spacing of channelizing devices on tangents shall be as follows:
   a. Where the posted speed limit is 50 m.p.h. or greater, the spacing shall be 100 ft.
   b. Where the posted speed limit is less than or equal to 45 m.p.h., the spacing shall be 50 ft.
3. The spacing of channelizing devices on tapers shall be numerically equal in feet to the posted speed limit in mph.
4. The flashing arrow sign shall not be placed on a sidewalk. The flashing arrow sign shall be placed at a distance of L/3 from the beginning of the taper.
5. For temporary lane closures during daylight hours, cones or tubular markers may be used in lieu of drums.
6. Temporary pavement markings will not be required for temporary daylight lane closures.
7. Minimum pavement section for 1000 trucks per day or less shall consist of 165 #/syd of HMA Surface, on 330 #/syd of HMA Intermediate, on 935 #/syd of HMA Base, on 8 in subgrade treatment. if the truck count for the crossover is greater than 1000 trucks per day, the required pavement section will be provided elsewhere in the plans.
8. Temporary highway illumination, when specified, shall be as detailed elsewhere in the plans.

⑨ Once the crossovers have been removed, this line shall be re-striped yellow, if the pavement is to again be used for one-way traffic.

⑩ For Temporary Crossover Type B, this line shall be removed when the traffic pattern is switched.

⑪ The advisory speed plate will not be required when the existing posted speed limit is less than 55 mph.

⑫ Spacing of channelizing devices at this location shall be 20 ft.

⑬ The "Two-Way Traffic" (XW6-3B) and "Do Not Pass" (R4-1-B) signs shall alternate every 2640 ft throughout the two-lane two-way operation.

⑭ For a bridge contract, this distance may be adjusted by the Engineer as required. However, it shall be as close to the minimum as possible.

⑮ Once the crossovers have been removed, this line shall be restriped broken white, if the pavement is to again be used for one way traffic.

LEGEND

- Flagger
- Work area
- Flashing arrow sign
- Channelizing device
- P — Police car (optional)
- Construction sign and supports
- W = Width of offset
- Temporary Pavement Marking
- Removal of pavement markings and prismatic reflectors
- Typical Sign Standard (Road Closure Sign Assembly)
- Type III-A or Type III-B Barricades as required
- Double Headed Flashing Arrow Sign
- Direction of Traffic

SURFACE AREA OF ONE TYPE A TEMPORARY CROSSOVER SYS	
MEDIAN WIDTH, ft	TYPE A
60	1208
50	1041
40	880
36	814
30	713
26	648

INDIANA DEPARTMENT OF TRANSPORTATION

TRAFFIC CONTROL LEGEND AND GENERAL NOTES

MARCH 2006

STANDARD DRAWING NO. E 801-TCLG-01

RICHARD L. VanCLEAVE REGISTERED No. 9750 STATE OF INDIANA PROFESSIONAL ENGINEER

DESIGN STANDARDS ENGINEER

/s/ Richard L. VanCleave 3-01-06
DESIGN STANDARDS ENGINEER DATE

/s/ Richard K. Smutzer 3-01-06
CHIEF HIGHWAY ENGINEER DATE

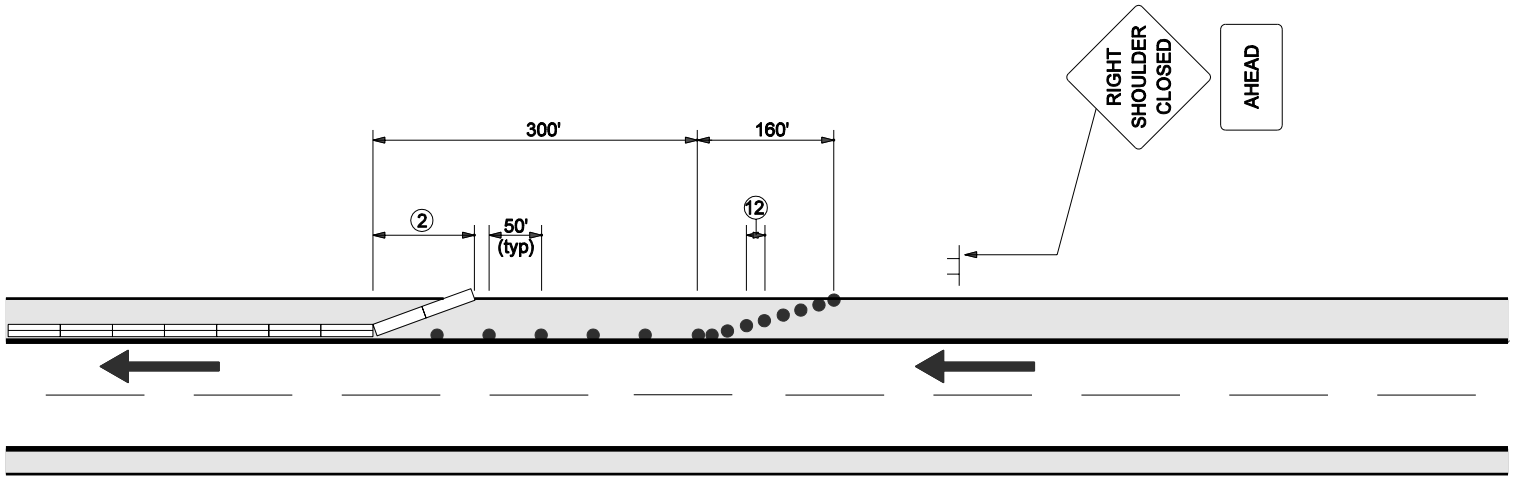

NOTES

1. All other applicable traffic control devices shall be utilized where appropriate in addition to those devices shown hereon.

② Flared temporary barrier or approved end treatment-flare rate 12:1 desirable.

3. For general notes see Standard Drawing E-801-TCLG-01.

4. Individual channelizing devices may be temporarily relocated or removed, as necessary, to allow access to the construction site by construction vehicles or access to residences or businesses. Tangent area openings shall not exceed 100 feet. Flare area openings shall not exceed 60 feet.

LEGEND

— Temporary Traffic Barrier

— Drums

— Sign

— Direction of traffic

INDIANA DEPARTMENT OF TRANSPORTATION

TRAFFIC CONTROL SHOULDER CLOSURE

MARCH 2006

STANDARD DRAWING NO. E 801-TCSC-01

RICHARD L. VanCLEAVE REGISTERED No. 9750 STATE OF INDIANA PROFESSIONAL ENGINEER

DESIGN STANDARDS ENGINEER

/s/ Richard L. VanCleave 3-01-06
DESIGN STANDARDS ENGINEER DATE

/s/ Richard K. Smutzer 3-01-06
CHIEF HIGHWAY ENGINEER DATE

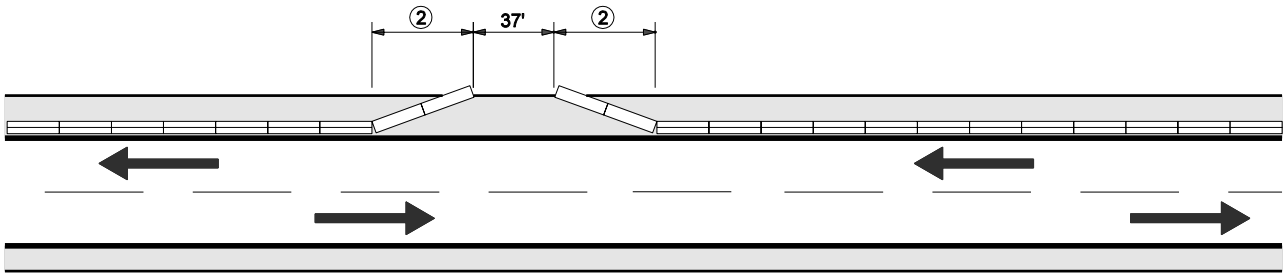

NOTES

1. All other applicable traffic control devices shall be utilized where appropriate in addition to those devices shown hereon.

② Flared temporary barrier or approved end treatment-flare rate 12:1 desirable.

3. For general notes see Standard Drawing E-801-TCLG-01.

LEGEND

— Temporary Traffic Barrier

— Direction of traffic

TWO-WAY-UNDIVIDED

INDIANA DEPARTMENT OF TRANSPORTATION

TRAFFIC CONTROL SHOULDER CLOSURE LOCAL ACCESS

MARCH 2006

STANDARD DRAWING NO. E 801-TCSC-02

RICHARD L. VanCLEAVE REGISTERED No. 9750 STATE OF INDIANA PROFESSIONAL ENGINEER

DESIGN STANDARDS ENGINEER

/s/ Richard L. VanCleave 3-01-06
DESIGN STANDARDS ENGINEER DATE

/s/ Richard K. Smutzer 3-01-06
CHIEF HIGHWAY ENGINEER DATE

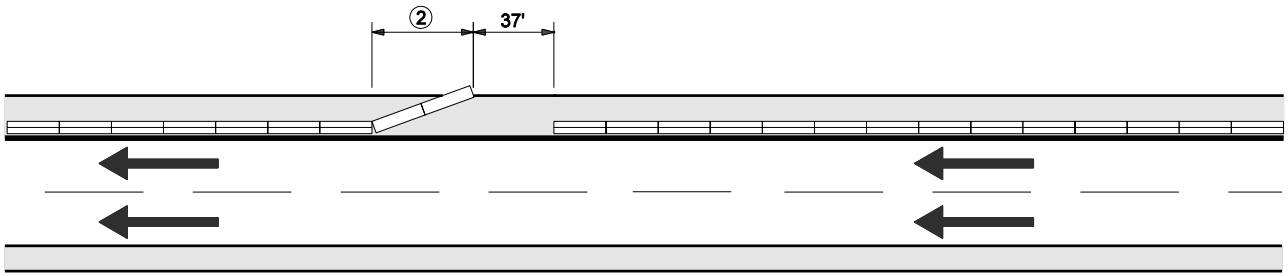

NOTES

1. All other applicable traffic control devices shall be utilized where appropriate in addition to those devices shown hereon.

② Flared temporary barrier or approved end treatment-flare rate 12:1 desirable.

3. For general notes see Standard Drawing E-801-TCLG-01.

LEGEND

— Temporary Barrier

— Direction of traffic

MULTI-LANE-DIVIDED

INDIANA DEPARTMENT OF TRANSPORTATION

TRAFFIC CONTROL SHOULDER CLOSURE LOCAL ACCESS

MARCH 2006

STANDARD DRAWING NO. E 801-TCSC-03

RICHARD L. VanCLEAVE REGISTERED No. 9750 STATE OF INDIANA PROFESSIONAL ENGINEER

DESIGN STANDARDS ENGINEER

/s/ Richard L. VanCleave 3-01-06
DESIGN STANDARDS ENGINEER DATE

/s/ Richard K. Smutzer 3-01-06
CHIEF HIGHWAY ENGINEER DATE



XW20-1
XW20-1-A (10)



XW20-2 (10)



XW20-3 (10)

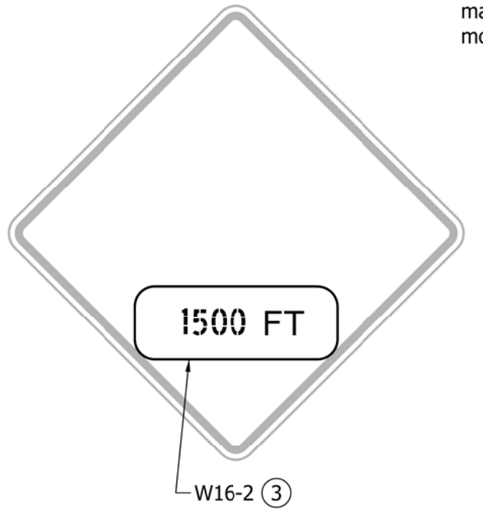

W16-2 (3)

NOTES:

1. Sign XW21-3-A shall be placed as directed where road machinery is operating on or across pavement open to traffic.
2. See Standard Drawing E 801-TCSN-11 for additional general notes.

(3) A 28 in. x 10 in. metal plate, covered with federal orange reflective material with black numerals designating predetermined distance, may be attached over the word "AHEAD" to more specifically locate the subject hazard.



XW20-4 (10)



XW21-3-A (10)
(9)



XW21-4-A (10)

INDIANA DEPARTMENT OF TRANSPORTATION

TRAFFIC CONTROL
SIGNS

SEPTEMBER 2010

STANDARD DRAWING NO. E 801-TCSN-01

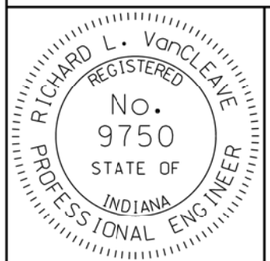

DESIGN STANDARDS ENGINEER

/s/ Richard L. VanCleave 09/01/10
DESIGN STANDARDS ENGINEER DATE

/s/ Mark A. Miller 09/01/10
CHIEF HIGHWAY ENGINEER DATE

GENERAL NOTES

1. See Standard Drawing E 801-TCSN-11 for additional general notes.



XW21-6-A (9)



XW21-2 (9)
XW21-2-A (1)



XW20-7 (9) (10)



XW21-1 (9)



XW20-5 (R,L, or C) (10)

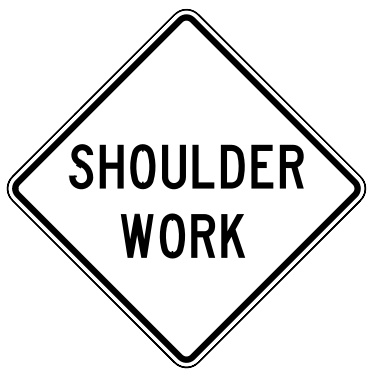

XW21-5-A

INDIANA DEPARTMENT OF TRANSPORTATION

TRAFFIC CONTROL SIGNS

SEPTEMBER 1997

STANDARD DRAWING NO. **E 801-TCSN-02**

ANTHONY L. UREMOVICH REGISTERED No. 18095 STATE OF INDIANA PROFESSIONAL ENGINEER

DESIGN STANDARDS ENGINEER

DETAILS PLACED IN THIS FORMAT 11-15-99

/s/ Anthony L. Uremovich 11-15-99
DESIGN STANDARDS ENGINEER DATE

/s/ Firooz Zandi 11-15-99
CHIEF HIGHWAY ENGINEER DATE

ORIGINALLY APPROVED 9-02-97

GENERAL NOTES

1. See Standard Drawing E 801-TCSN-11 for additional general notes.

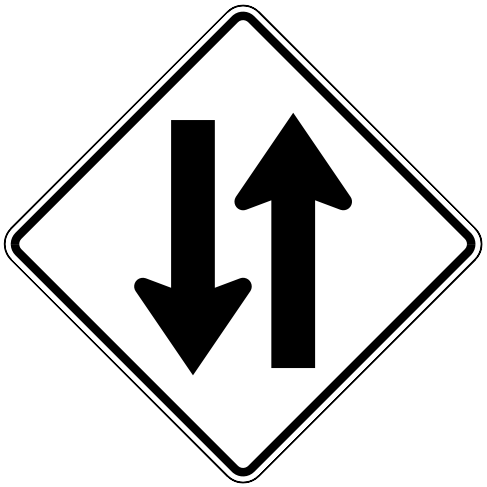

XW6-3-B

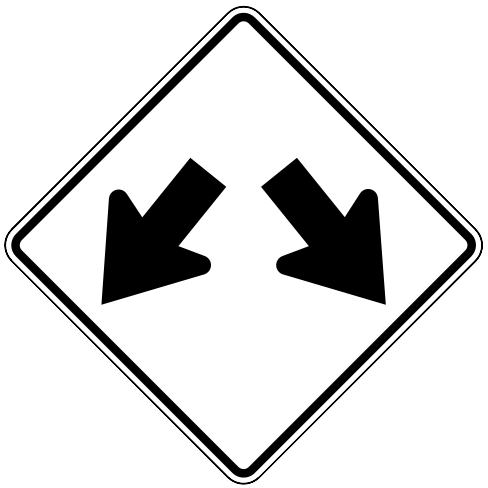

XW12-1-C



XM4-9 (R or L)
XM4-9-B (R or L)



XM4-10 (R or L)

INDIANA DEPARTMENT OF TRANSPORTATION

TRAFFIC CONTROL SIGNS

JUNE 1995

STANDARD DRAWING NO. **E 801-TCSN-03**

ANTHONY L. UREMOVICH REGISTERED No. 18095 STATE OF INDIANA PROFESSIONAL ENGINEER

DESIGN STANDARDS ENGINEER

DETAILS PLACED IN THIS FORMAT	11-15-99
/s/ Anthony L. Uremovich	11-15-99
DESIGN STANDARDS ENGINEER	DATE
/s/ Firooz Zandi	11-15-99
CHIEF HIGHWAY ENGINEER	DATE
ORIGINALLY APPROVED	7-03-95



R2-1
R2-1-B (1)



R3-2a
R3-2c (1)



R11-2



R12-1
R12-1-A (1)



R6-1 (R or L)



R6-2-A (R or L)



R11-3



R5-1-A
R5-1-B (1)



R4-1
R4-1-B (1)



R11-4

NOTES:

1. Signs R11-2, R11-3, R11-4, R5-1-A and R5-1-B shall be prismatic reflective sheeting background.
2. See Standard Drawing E 801-TCSN-11 for additional general notes.

INDIANA DEPARTMENT OF TRANSPORTATION

TRAFFIC CONTROL
SIGNS

SEPTEMBER 2010

STANDARD DRAWING NO. E 801-TCSN-04

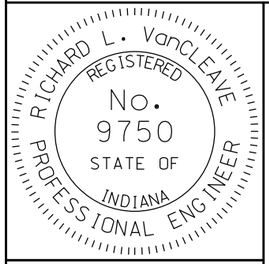

DESIGN STANDARDS ENGINEER

/s/ Richard L. VanCleave 09/01/10
DESIGN STANDARDS ENGINEER DATE

/s/ Mark A. Miller 09/01/10
CHIEF HIGHWAY ENGINEER DATE

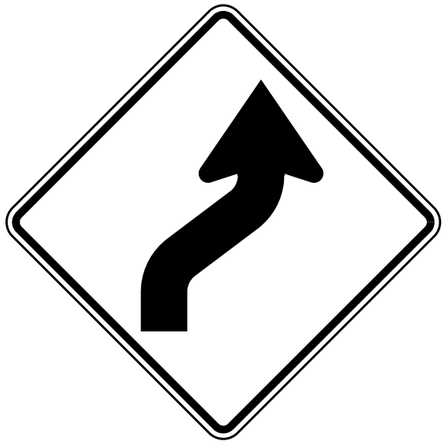

XW1-4-A (R or L)
XW1-4-B (R or L) (1)

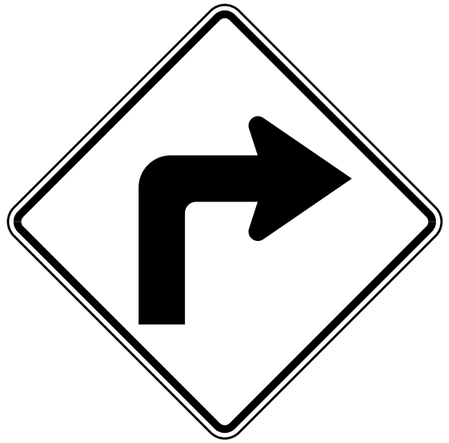

XW1-1-A (R or L)
XW1-1-B (R or L) (1)

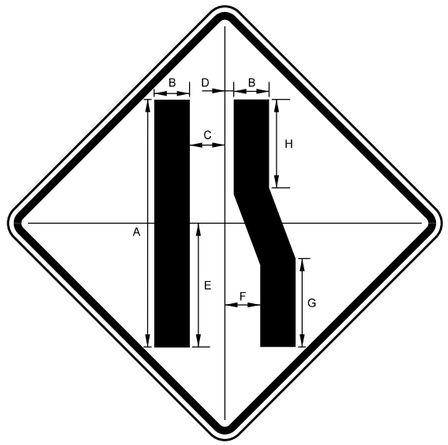

XW4-2 (R or L)
XW4-2-A (R or L) (1)

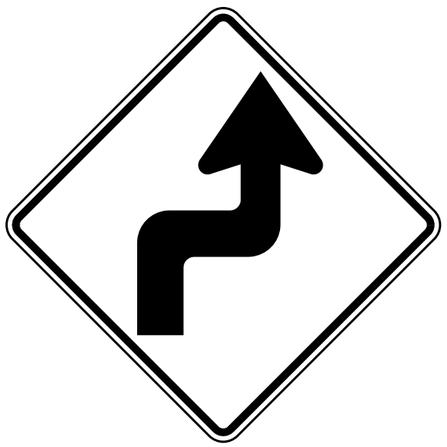

XW1-3-A (R or L)
XW1-3-B (R or L) (1)



XW1-2-A (R or L)
XW1-2-B (R or L) (1)

NOTE:

(1) See Standard Drawing E 801-TCSN-11 for additional general notes.

LANE ENDS		
	XW4-2	XW4-2-A
A	28	37
B	4	5 5/16
C	4	5 1/16
D	1	1 3/8
E	14	16 5/8
F	4	5 5/16
G	10	13 5/16
H	10	13 5/16

INDIANA DEPARTMENT OF TRANSPORTATION

TRAFFIC CONTROL
SIGNS

SEPTEMBER 2010

STANDARD DRAWING NO. E 801-TCSN-05

RICHARD L. VanCLEAVE
REGISTERED
No. 9750
STATE OF INDIANA
PROFESSIONAL ENGINEER

DESIGN STANDARDS ENGINEER

/s/ Richard L. VanCleave 09/01/10
DESIGN STANDARDS ENGINEER DATE

/s/ Mark A. Miller 09/01/10
CHIEF HIGHWAY ENGINEER DATE

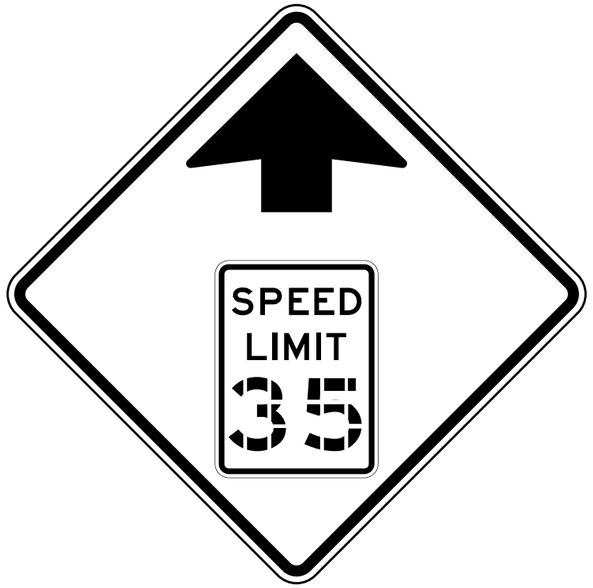

XW3-5



XW3-5a

NOTE:

(1) See Standard Drawing E 801-TCSN-11 for additional general notes.



XW13-1-A
(To be used below a warning sign only.)

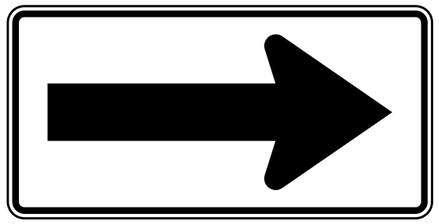

XW1-6
XW1-6-A (1)



XW6-2a-A
XW6-2a-B (1)



XW8-3-A

INDIANA DEPARTMENT OF TRANSPORTATION

TRAFFIC CONTROL
SIGNS

SEPTEMBER 2011

STANDARD DRAWING NO. E 801-TCSN-06

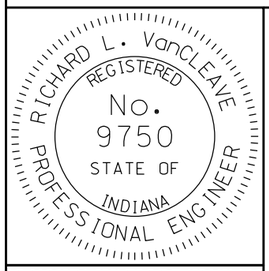

DESIGN STANDARDS ENGINEER

/s/ Richard L. VanCleave 09/01/11
DESIGN STANDARDS ENGINEER DATE

/s/ Mark A. Miller 09/01/11
CHIEF HIGHWAY ENGINEER DATE



XW8-2-A
XW8-2-B (1)



XW8-6-A
XW8-6-B (1)



XW9-2-A (R or L)



XW8-1-A
XW8-1-B (1)



XW8-4-A
XW8-4-B (1)

GENERAL NOTES

1. See Standard Drawing E 801-TCSN-11 for additional general notes.

INDIANA DEPARTMENT OF TRANSPORTATION

TRAFFIC CONTROL SIGNS

JUNE 1995

STANDARD DRAWING NO. **E 801-TCSN-07**

ANTHONY L. URENOVICH REGISTERED No. 18095 STATE OF INDIANA PROFESSIONAL ENGINEER

DESIGN STANDARDS ENGINEER

DETAILS PLACED IN THIS FORMAT 11-15-99

/s/ Anthony L. Uremovich 11-15-99
DESIGN STANDARDS ENGINEER DATE

/s/ Firooz Zandi 11-15-99
CHIEF HIGHWAY ENGINEER DATE

ORIGINALLY APPROVED 7-03-95

GENERAL NOTES

1. See Standard Drawing E 801-TCSN-11 for additional general notes.



XW105-1-A



XW109-1



XW20-1a



XW106-2-A



XW106-1-A

INDIANA DEPARTMENT OF TRANSPORTATION

TRAFFIC CONTROL SIGNS

JUNE 1995

STANDARD DRAWING NO. **E 801-TCSN-08**

ANTHONY L. UREMOVICH REGISTERED No. 18095 STATE OF INDIANA PROFESSIONAL ENGINEER

DESIGN STANDARDS ENGINEER

DETAILS PLACED IN THIS FORMAT 11-15-99

/s/ Anthony L. Uremovich 11-15-99
DESIGN STANDARDS ENGINEER DATE

/s/ Firooz Zandi 11-15-99
CHIEF HIGHWAY ENGINEER DATE

ORIGINALLY APPROVED 7-03-95

NOTE:

(1) See Standrad Drawing E 801-TCSN-11 for additional general notes.



XW9-1-A (R or L)
XW9-1-B (R or L) (1)



XW103-1



XW104-1
To be used below an
XW103-1 Sign only.

INDIANA DEPARTMENT OF TRANSPORTATION

TRAFFIC CONTROL
SIGNS

SEPTEMBER 2010

STANDARD DRAWING NO. E 801-TCSN-09

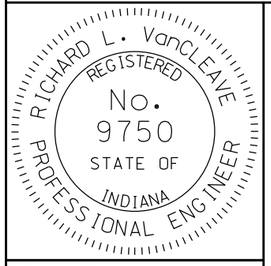

DESIGN STANDARDS ENGINEER

/s/ Richard L. VanCleave *09/01/10*
DESIGN STANDARDS ENGINEER DATE

/s/ Mark A. Miller *09/01/10*
CHIEF HIGHWAY ENGINEER DATE



XW101-1 (9) (10)
XW101-1-A (1)



XW102-1 (9)
XW102-1-A (1)



XW108-1 (10)
XW108-1-A (1)

GENERAL NOTES

1. See Standard Drawing E 801-TCSN-11 for additional general notes.

INDIANA DEPARTMENT OF TRANSPORTATION

TRAFFIC CONTROL SIGNS

JUNE 1995

STANDARD DRAWING NO. **E 801-TCSN-10**

ANTHONY L. UREMOVICH REGISTERED No. 18095 STATE OF INDIANA PROFESSIONAL ENGINEER

DESIGN STANDARDS ENGINEER

DETAILS PLACED IN THIS FORMAT 11-15-99

/s/ Anthony L. Uremovich 11-15-99
DESIGN STANDARDS ENGINEER DATE

/s/ Firooz Zandi 11-15-99
CHIEF HIGHWAY ENGINEER DATE

ORIGINALLY APPROVED 7-03-95

GENERAL NOTES:

(1) This sign shall be used on expressways, freeways, and other roadways with design speeds of 50 mph. or more.

2. The minimum vertical and horizontal clearances for construction signs shall be as on Standard Drawing E 801-TCDV-05.

3. The minimum horizontal clearance for construction signs on curbed roadway sections shall be 2'-0" from the face of the curb to the near edge of the sign.

4. The minimum depth for wood or steel posts shall be 4 ft.

5. See Standard Drawing E 801-TCDV-08 for U-Channel Steel Post Splice Detail.

(9) This sign shall be removed, covered, or turned to face away from the roadway during non-working hours.

(10) This sign may be ordered to read "500 FT", "1000 FT", or "1500 FT" in place of the word "Ahead". Such signs may be used in place of, or in conjunction with, the indicated sign.

INDIANA DEPARTMENT OF TRANSPORTATION

CONSTRUCTION SIGNS
GENERAL NOTES

SEPTEMBER 2010

STANDARD DRAWING NO. E 801-TCSN-11

RICHARD L. VanCLEAVE
REGISTERED
No. 9750
STATE OF INDIANA
PROFESSIONAL ENGINEER

DESIGN STANDARDS ENGINEER

/s/ Richard L. VanCleave *09/01/10*
DESIGN STANDARDS ENGINEER DATE

/s/ Mark A. Miller *09/01/10*
CHIEF HIGHWAY ENGINEER DATE

SIGN NUMBER	SIGN MESSAGE	POST DESIGN		SIGN SIZE	SIGN COLOR		BORDER WIDTH	MARGIN WIDTH	LETTER HEIGHT SERIES-LINE 1	LETTER HEIGHT SERIES-LINE 2	LETTER HEIGHT SERIES-LINE 3	WORD OR LINE (1)	PCT. (1)	ARROW SIZE		CORNER RADIUS	NUMBER OF POSTS	
		4 x 4 WOOD	STEEL		BACKGROUND	COPY								HEAD	SHAFT		ONE	TWO
XG20-1	"Road Construction Next ____ Miles"	*	B	60 x 36	Orange	Black	3/4	1/2	6 - Series C	6 - Series C	6 - Series C					2 1/4		X
XG20-2	"End Construction"	*	B	60 x 24	Orange	Black	1/2	3/8	6 - Series C	6 - Series C						1 1/2		X
XG20-2a	"End Road Work"	*	B	48 x 18	Orange	Black	1/2	3/8	6 - Series C	6 - Series C						1 1/2		X
XG20-4	"Pilot Car Follow Me"	--	--	36 x 18	Orange	Black	1/2	3/8	5 - Series C	5 - Series C						1 1/2		
XG20-5	(Route number or) "Lane Closed" __ (date)	*	B	48 x 36	Orange	Black	3/4	1/2	6 - Series C	6 - Series C	6 - Series C					2 1/4		X
XG20-5-B	"Worksite" plate	--	--	48 x 16	Orange	Black	1/2	3/8	8 - Series C							1 1/2	----	----
XW20-6	"Lane Restrictions On Or After *** ** 2007	*	B	60 x 30	Orange	Black	3/4	1/2	5 - Series C	5 - Series C	4 - Series C					1 7/8		X
XW20-6a	"Lane Restrictions On Or After *** ** 2007	*	B	72 x 36	Orange	Black	7/8	5/8	6 - Series C	6 - Series C	5 - Series C					2 1/4		X
XM4-9 (R or L)	"Detour" (above black arrow)	*	A	30 x 24	Orange	Black	1/2	3/8	5 - Series D			"Detour"		7 x 8	11 x 3 1/2	1 1/2		X
XM4-9-B (R or L)	"Detour" (above black arrow)	*	B	60 x 48	Orange	Black	1 1/4	3/8	10 - Series D			"Detour"		14 3/4 x 16	21 3/4 x 7	3		X
XM4-10 (R or L)	"Detour" (inside orange arrow)	*	B	48 x 18	Black & Orange	Black	----	3/8	6 - Series D					12 x 13 3/8	29 3/4 x 8	1 1/2		X
XW1-1-A (R or L)	(Turn symbol)	*	A	36 x 36	Orange	Black	3/4	1/2						10 5/8 x 12	5 1/4	2 1/4		X
XW1-1-B (R or L)	(Turn symbol)	*	B	48 x 48	Orange	Black	1 1/4	3/4						14 1/8 x 16	7	3		X
XW1-2-A (R or L)	(Curve symbol)	*	A	36 x 36	Orange	Black	3/4	1/2						10 5/8 x 12	5 1/4	2 1/4		X
XW1-2-B (R or L)	(Curve symbol)	*	B	48 x 48	Orange	Black	1 1/4	3/4						14 1/8 x 16	7	3		X
XW1-3-A (R or L)	(Reverse turn symbol)	*	A	36 x 36	Orange	Black	3/4	1/2						10 5/8 x 12	5 1/4	2 1/4		X
XW1-3-B (R or L)	(Reverse turn symbol)	*	B	48 x 48	Orange	Black	1 1/4	3/4						14 1/8 x 16	7	3		X
XW1-4-A (R or L)	(Reverse curve symbol)	*	A	36 x 36	Orange	Black	3/4	1/2						10 5/8 x 12	5 1/4	2 1/4		X
XW1-4-B (R or L)	(Reverse curve symbol)	*	B	48 x 48	Orange	Black	1 1/4	3/4						14 1/8 x 16	7	3		X
XW1-6	(Single headed arrow)	*	B	48 x 24	Orange	Black	3/4	3/4						13 1/8 x 15	26 x 6 1/2	1 1/2		X
XW1-6-A	(Single headed arrow)	*	B	60 x 30	Orange	Black	3/4	1/2						16 3/8 x 18	32 1/2 x 8	2 1/4		X
XW4-2 (R or L)	(Lane ends merge ___ symbol)	*	A	36 x 36	Orange	Black	3/4	1/2	See Standard Sheet 3A Detours							2 1/4		X
XW4-2-A (R or L)	(Lane ends merge ___ symbol)	*	B	48 x 48	Orange	Black	1 1/4	3/4	See Standard Sheet 3A Detours							1 1/2		X
XW6-2a-A	(Divided highway ends symbol)	*	A	36 x 36	Orange	Black	3/4	1/2	5 - Series D	5 - Series D	5 - Series D					2 1/4		X
XW6-2a-B	(Divided highway ends symbol)	*	B	48 x 48	Orange	Black	1 1/4	3/4	7 - Series D	7 - Series D	7 - Series D					3		X
XW3-5-A	Arrow - "Speed Limit ___"	*	A	36 x 36	Orange	Black	7/8	5/8	3 - Series E	3 - Series E	12 - C					2 1/4		X
XW3-5-B	Arrow - "Speed Limit ___"	*	B	48 x 48	Orange	Black	1 1/4	3/4	4 - Series E	4 - Series E	15 C					3		X
XW3-5a-A	"___- MPH - Speed Zone Ahead"	*	A	36 x 36	Orange	Black	7/8	5/8	5 - Series C	5 - Series C	5 - Series C					2 1/2		X
XW3-5a-B	"___- MPH - Speed Zone Ahead"	*	B	48 x 48	Orange	Black	1 1/4	3/4	7 - Series C	7 - Series C	7 - Series C					3		X

*Wood post permitted.

NOTES:

(1) Spacing between letters of this word or line shall be reduced by this percentage as shown in the FHWA document, Standard Highway Signs.

2. See Standard Drawing E 801-TCSN-11 for additional general notes.

3. All dimensions are in inches.

INDIANA DEPARTMENT OF TRANSPORTATION

SIGN DESIGN DETAILS
(Sheet 1 of 2)

SEPTEMBER 2011

STANDARD DRAWING NO. E 801-TCSN-12

RICHARD L. VanCLEAVE REGISTERED No. 9750 STATE OF INDIANA PROFESSIONAL ENGINEER

DESIGN STANDARDS ENGINEER

/s/ Richard L. VanCleave 09/01/11
DESIGN STANDARDS ENGINEER DATE

/s/ Mark A. Miller 09/01/11
CHIEF HIGHWAY ENGINEER DATE

SIGN NUMBER	SIGN MESSAGE	POST DESIGN		SIGN SIZE	SIGN COLOR		BORDER WIDTH	MARGIN WIDTH	LETTER HEIGHT SERIES-LINE 1	LETTER HEIGHT SERIES-LINE 2	LETTER HEIGHT SERIES-LINE 3	WORD OR LINE (1)	PCT. (1)	ARROW SIZE		CORNER RADIUS	NUMBER OF POSTS	
		4 x 4 WOOD	STEEL		BACKGROUND	COPY								HEAD	SHAFT		ONE	TWO
XW6-3-B	(Two way traffic symbol)	*	B	48 x 48	Orange	Black	1 1/4	3/4						11 5/8 x 13 3/4	23 1/2 x 6	3		X
XW8-1-A	"Bump"	*	A	36 x 36	Orange	Black	3/4	1/2	10 - Series D							2 1/4		X
XW8-1-B	"Bump"	*	B	48 x 48	Orange	Black	1 1/4	3/4	12 - Series D							3		X
XW8-2-A	"Dip"	*	A	36 x 36	Orange	Black	3/4	1/2	10 - Series E							2 1/4		X
XW8-2-B	"Dip"	*	B	48 x 48	Orange	Black	1 1/4	3/4	12 - Series E							3		X
XW8-3-A	"Pavement Ends"	*	A	36 x 36	Orange	Black	3/4	1/2	6 - Series C	6 - Series C						2 1/4		X
XW8-4-A	"Soft Shoulder"	*	A	36 x 36	Orange	Black	3/4	1/2	6 - Series C	6 - Series C						2 1/4		X
XW8-4-B	"Soft Shoulder"	*	B	48 x 48	Orange	Black	1 1/4	3/4	8 - Series C	8 - Series C						3		X
XW8-6-A	"Truck Crossing"	*	A	36 x 36	Orange	Black	3/4	1/2	6 - Series C	6 - Series C						2 1/4		X
XW8-6-B	"Truck Crossing"	*	B	48 x 48	Orange	Black	1 1/4	3/4	8 - Series C	8 - Series C						3		X
XW9-1-A (R or L)	"___ Lane Ends"	*	A	36 x 36	Orange	Black	3/4	1/2	6 - Series D	6 - Series D	6 - Series D					2 1/4		X
XW9-1-B (R or L)	"___ Lane Ends"	*	B	48 x 48	Orange	Black	1 1/4	3/4	8 - Series D	8 - Series D	8 - Series D					3		X
XW9-2-A (R or L)	"Lane Ends Merge ___"	*	B	48 x 48	Orange	Black	1 1/4	3/4	6 - Series C	8 - Series D	8 - Series D					2 1/4		X
XW12-1-C	(Double headed arrow)	*	B	48 x 48	Orange	Black	1 1/4	3/4						12 1/2 x 15	12 x 5 1/4	3		X
XW13-1-A	"___MPH" (Advisory speed plate)	*	A	24 x 24	Orange	Black	1/2	3/8	10 - Series E	4 - Series E						1 1/2	----	----
XW20-1	"Road Construction Ahead"	*	B	48 x 48	Orange	Black	1 1/4	3/4	7 - Series C	7 - Series C	7 - Series C	"Construction"	25			3		X
XW20-1-A	"Road Construction Ahead"	*	B	60 x 60	Orange	Black	1 1/2	1	8 - Series C	8 - Series C	8 - Series C	"Construction"	25			95		X
XW20-1a	"Road Repairs Next ___ Miles"	*	B	48 x 48	Orange	Black	1 1/4	3/4	8 - Series C	8 - Series C	6 - Series C					3		X
XW20-2	"Detour Ahead"	*	B	48 x 48	Orange	Black	1 1/4	3/4	8 - Series D	8 - Series D		"Detour"	25			3		X
XW20-3	"Road Closed Ahead"	*	B	48 x 48	Orange	Black	1 1/4	3/4	7 - Series D	7 - Series D	7 - Series D					3		X
XW20-4	"One Lane Road Ahead"	*	B	48 x 48	Orange	Black	1 1/4	3/4	7 - Series C	7 - Series C	7 - Series C					3		X
XW20-5 (R, C, or L)	"___ Lane Closed Ahead"	*	B	48 x 48	Orange	Black	1 1/4	3/4	6 - Series C	6 - Series C	6 - Series C		2			3		X
XW20-7a-A	(Flagger symbol)	*	B	48 x 48	Orange	Black	1 1/4	3/4								1 1/2		X
XW21-1a	(Workers symbol)	*	A	36 x 36	Orange	Black	3/4	1/2	6 - Series D							2 1/4		X
XW21-2	"Fresh Oil"	*	A	30 x 30	Orange	Black	3/4	3/8	6 - Series D	6 - Series D		"Fresh"	2/4			1 7/8	X	
XW21-2-A	"Fresh Oil"	*	A	36 x 36	Orange	Black	3/4	1/2	7 - Series D	7 - Series D		"Fresh"	3/4			2 1/4		X
XW21-3-A	"Road Machinery Ahead"	*	B	48 x 48	Orange	Black	1 1/4	3/4	7 - Series D	7 - Series D	7 - Series D	"Machinery"	25			3		X
XW21-4-A	"Road Work Ahead"	*	B	48 x 48	Orange	Black	1 1/4	3/4	7 - Series D	7 - Series D	7 - Series D					3		X
XW21-5-A	"Shoulder Work"	*	A	36 x 36	Orange	Black	3/4	1/2	6 - Series C	6 - Series C		"Shoulder"	1			2 1/4		X
XW21-6-A	"Survey Crew"	*	A	36 x 36	Orange	Black	3/4	1/2	6 - Series C	6 - Series C						2 1/4		X

*Wood post permitted.

NOTES:

(1) Spacing between letters of this word or line shall be reduced by this percentage as shown in the FHWA document, Standard Highway Signs.

2. See Standard Drawing E 801-TCSN-11 for additional general notes.

3. All dimensions are in inches.

INDIANA DEPARTMENT OF TRANSPORTATION

SIGN DESIGN DETAILS
(sheet 2 of 2)

SEPTEMBER 2011

STANDARD DRAWING NO. E 801-TCSN-12A

RICHARD L. VanCLEAVE REGISTERED No. 9750 STATE OF INDIANA PROFESSIONAL ENGINEER

DESIGN STANDARDS ENGINEER

/s/ Richard L. VanCleave 09/01/11
DESIGN STANDARDS ENGINEER DATE

/s/ Mark A. Miller 09/01/11
CHIEF HIGHWAY ENGINEER DATE

SIGN NUMBER	SIGN MESSAGE	POST DESIGN		SIGN SIZE	SIGN COLOR		BORDER WIDTH	MARGIN WIDTH	LETTER HEIGHT SERIES-LINE 1	LETTER HEIGHT SERIES-LINE 2	LETTER HEIGHT SERIES-LINE 3	LETTER HEIGHT SERIES-LINE 4	ARROW SIZE		CORNER RADIUS	NO. OF POSTS	
		4 x 4 WOOD	STEEL		BACKGROUND	COPY							HEAD	SHAFT		ONE	TWO
XW101-1	"Mowing Crews Ahead"	*	A	36 x 36	Orange	Black	3/4	1/2	6 - Series C	6 - Series C	6 - Series C				2 1/4		X
XW101-1-A	"Mowing Crews Ahead"	*	B	48 x 48	Orange	Black	1 1/4	3/4	8 - Series C	8 - Series C	8 - Series C				3		X
XW102-1	"Mowing Crews Next ___ Miles"	*	A	36 x 36	Orange	Black	3/4	1/2	6 - Series C	6 - Series C	4 - Series C	4 - Series C			2 1/4		X
XW102-1-A	"Mowing Crews Next ___ Miles"	*	B	48 x 48	Orange	Black	1 1/4	3/4	8 - Series C	8 - Series C	6 - Series C	6 - Series C			3		X
XW103-1	"Watch For Stopped Traffic"	*	B	48 x 48	Orange	Black	1 1/4	3/4	7 - Series C	7 - Series C	7 - Series C				3		X
XW104-1	"Overhead Sign Installation"	*	B	60 x 24	Orange	Black	1/2	3/8	6 - Series C	6 - Series C					1 1/2		X
XW105-1-A	"Right Lane Exit Open"	*	B	48 x 48	Orange	Black	1 1/4	3/4	6 - Series C	6 - Series C					3		X
XW106-1-A	"Exit Closed"	*	B	48 x 48	Orange	Black	1 1/4	3/4	7 - Series C	7 - Series C					3		X
XW106-2-A	"Exit Open"	*	B	48 x 48	Orange	Black	1 1/4	3/4	7 - Series C	7 - Series C					3		X
XW108-1	"Utility Work Ahead"	*	A	36 x 36	Orange	Black	3/4	1/2	6 - Series D	6 - Series D	6 - Series D				2 1/4		X
XW108-1-A	"Utility Work Ahead"	*	B	48 x 48	Orange	Black	1 1/4	3/4	6 - Series C	6 - Series C	6 - Series C				3		X
XW109-1	"Exit" (above black arrow)	*	B	48 x 48	Orange	Black	1 1/4	3/4	12 - Series D						3		X
R2-1	"Speed limit _____"	*	A	24 x 30	White	Black	1/2	3/8	4 - Series E	4 - Series E	10 - Series E				1 1/2	X	
R2-1-B	"Speed limit _____"	*	B	48 x 60	White	Black	1 1/4	3/4	8 - Series E	8 - Series E	16 - Series E				3		X
R3-2-A (R or L)	(No ___ turn symbol)	*	A	30 x 30	White	Black	3/4	3/8							2	X	
R3-2-C (R of L)	(No ___ turn symbol)	*	B	48 x 48	White	Black	1 1/4	3/4							3		X
R4-1	"Do Not Pass"	*	A	24 x 30	White	Black	1/2	3/8	6 - Series D	6 - Series D	5 - Series D				1 7/8	X	
R4-1-B	"Do Not Pass"	*	B	48 x 60	White	Black	1 1/4	3/4	10 - Series D	10 - Series D	10 - Series D				3		X
R5-1-A	"Do Not Enter" (inside symbol)	*	A	36 x 36	Red	White	Radius 17 1/2		5 - Series D	6 x 30 Bar	5 - Series D				2 1/4		X
R5-1-B	"Do Not Enter" (inside symbol)	*	B	48 x 48	Red	White	Radius 23 1/2		6 - Series D	8 x 40 Bar	6 - Series D				3		X
R6-1 (R or L)	"One Way" (inside white arrow)	*	A	36 x 36	Black & White	Black	----	3/8	4 - Series D				7 1/2 x 8 1/2	22 1/4 x 5 1/4	1 1/2		X
R6-2-A (R or L)	"One Way" (above black arrow)	*	A	24 x 30	White	Black	1/2	3/8	6 - Series D	6 - Series D			5 1/4 x 6	8 x 2 1/4	1 1/2	X	
R11-2	"Road Closed"	*	B	48 x 30	White	Black	3/4	3/8	8 - Series D	8 - Series D					1 7/8		X
R11-3	"Road Closed ____ Miles Ahead "Local Traffic Only"	*	B	60 x 30	White	Black	3/4	3/8	6 - Series C	5 - Series C	4 - Series C				1 7/8		X
R11-4	"Road Closed To Thru Traffic"	*	B	60 x 30	White	Black	3/4	3/8	6 - Series C	5 - Series C	6 - Series C				1 7/8		X
R12-1	"Weight Limit ____Tons"	*	A	24 x 30	White	Black	1/2	3/8	4 - Series D	4 - Series D	5 - Series E	5 - Series D			1 1/2	X	
R12-1-A	"Weight Limit ____Tons"	----	B	36 x 48	White	Black	3/4	1/2	6 - Series D	6 - Series D	8 - Series E	10 - Series D			2 1/4		X
S 4-4	"When Flashing" plaque	*	----	48 x 20	White	Black	1/2	3/8	5 - Series D	5 - Series D					1 1/2	----	----
R2-Y12	"End Work Site Speed Limit"	*	A	24 x 36	White	Black	1/2	3/8	4 - Series D	4 - Series D	4 - Series D	4 - Series D			1 1/2	X	
R2-Y12-B	"End Work Site Speed Limit"	*	B	36 x 54	White	Black	1 1/4	3/4	6 - Series D	6 - Series D	6 - Series D	6 - Series D			3		X

* Wood post permitted.

NOTES:

1. See Standard Drawing E 801-TCSN-11 for General Notes.
2. All dimensions are in inches.

INDIANA DEPARTMENT OF TRANSPORTATION

SIGN DESIGN DETAILS

SEPTEMBER 2012

STANDARD DRAWING NO. E 801-TCSN-13

RICHARD L. VanCLEAVE REGISTERED No. 9750 STATE OF INDIANA PROFESSIONAL ENGINEER

/s/ Richard L. VanCleave 09/04/12
SUPERVISOR, ROADWAY STANDARDS DATE

/s/ Mark A. Miller 09/04/12
CHIEF ENGINEER DATE

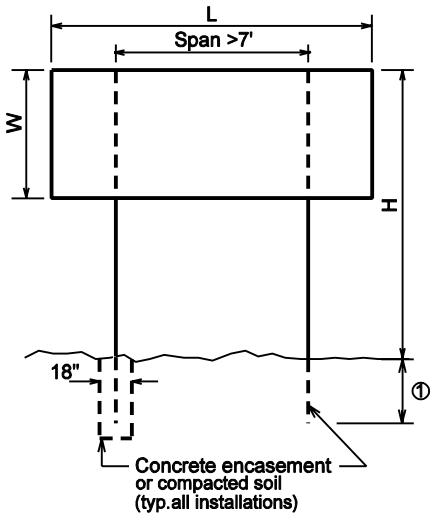

2 - Post Installation

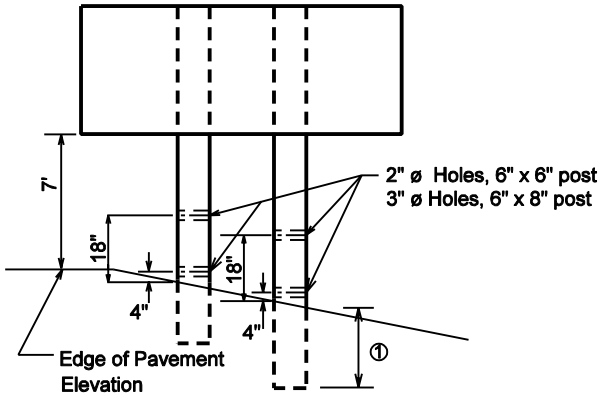

NOTES

① This dimension is H/10 + 3 feet or a minimum of 5 feet.

② The length of each of these pieces equals W.

3. See standard drawing E 801-TCSN-15 for post size and number of posts required.

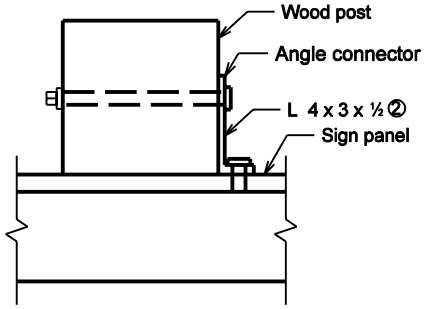

ANGLE SHAPE CONNECTION DETAIL

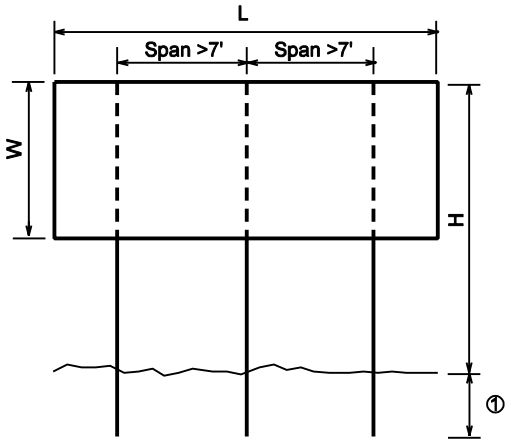

3 - Post Installation

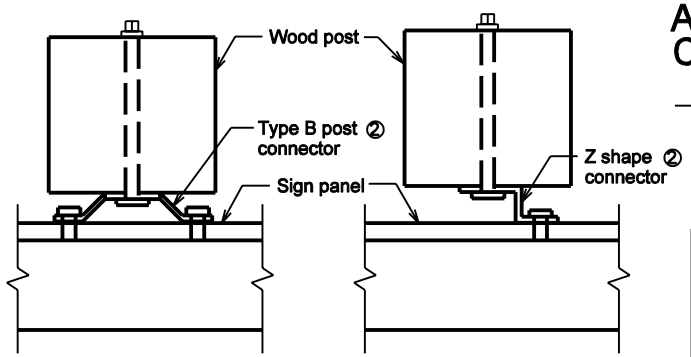

TYPE B POST CONNECTION DETAIL

Z SHAPE CONNECTION DETAIL

INDIANA DEPARTMENT OF TRANSPORTATION

TEMPORARY PANEL SIGN BREAK-AWAY POST INSTALLATION

MARCH 2002

STANDARD DRAWING NO. E 801-TCSN-14

RICHARD L. VanCLEAVE REGISTERED No. 9750 STATE OF INDIANA PROFESSIONAL ENGINEER

DESIGN STANDARDS ENGINEER

/s/ Richard L. VanCleave — DESIGN STANDARDS ENGINEER — 3-01-02 DATE

/s/ Richard K. Smutzer — CHIEF HIGHWAY ENGINEER — 3-01-02 DATE

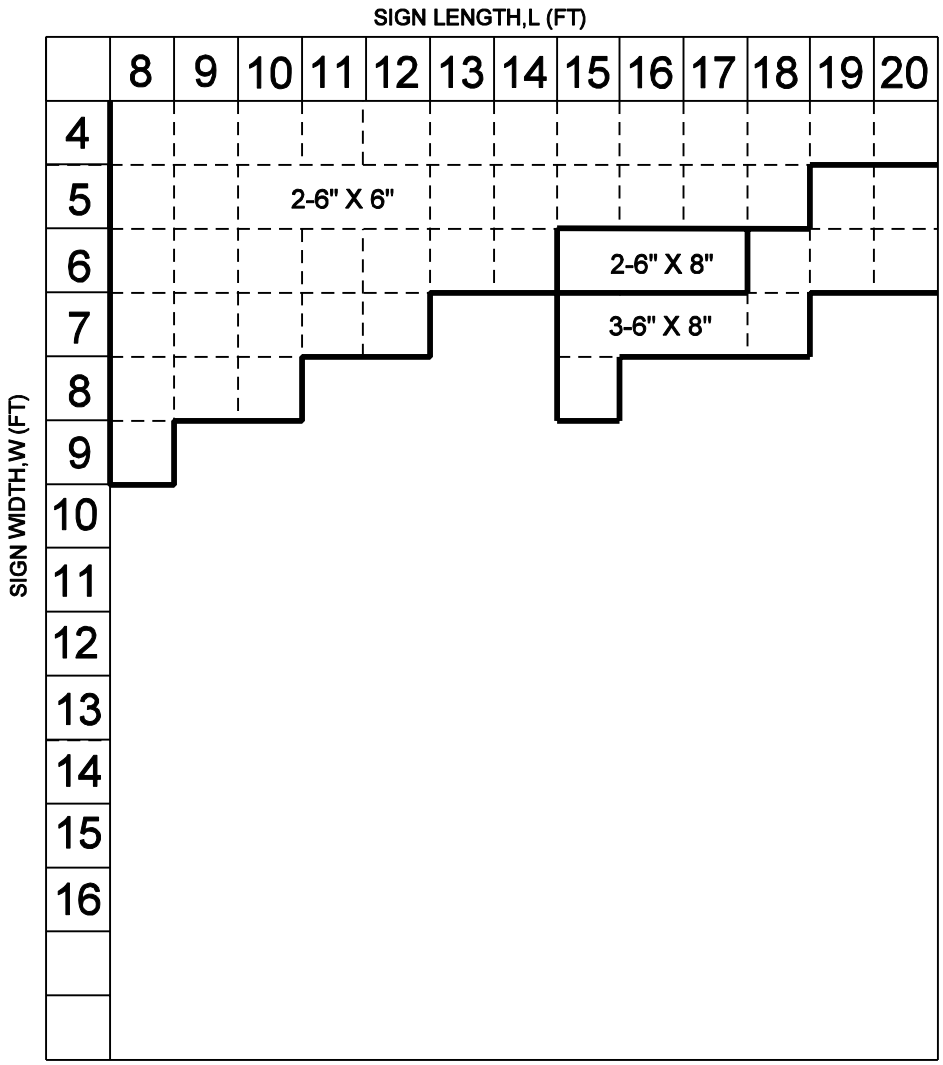

NOTES:

No more than one post can be located in a 7 foot wide path.

INDIANA DEPARTMENT OF TRANSPORTATION

WOOD POST DESIGN FOR TEMPORARY PANEL SIGNS

MARCH 2002

STANDARD DRAWING NO. E 801-TCSN-15

RICHARD L. VanCLEAVE REGISTERED No. 9750 STATE OF INDIANA PROFESSIONAL ENGINEER

DESIGN STANDARDS ENGINEER

/s/ Richard L. VanCleave 3-01-02
DESIGN STANDARDS ENGINEER DATE

/s/ Richard K. Smutzer 3-01-02
CHIEF HIGHWAY ENGINEER DATE

GENERAL NOTES

1. See Standard Drawing E 801-TCLG-01 for General Notes and Legend.

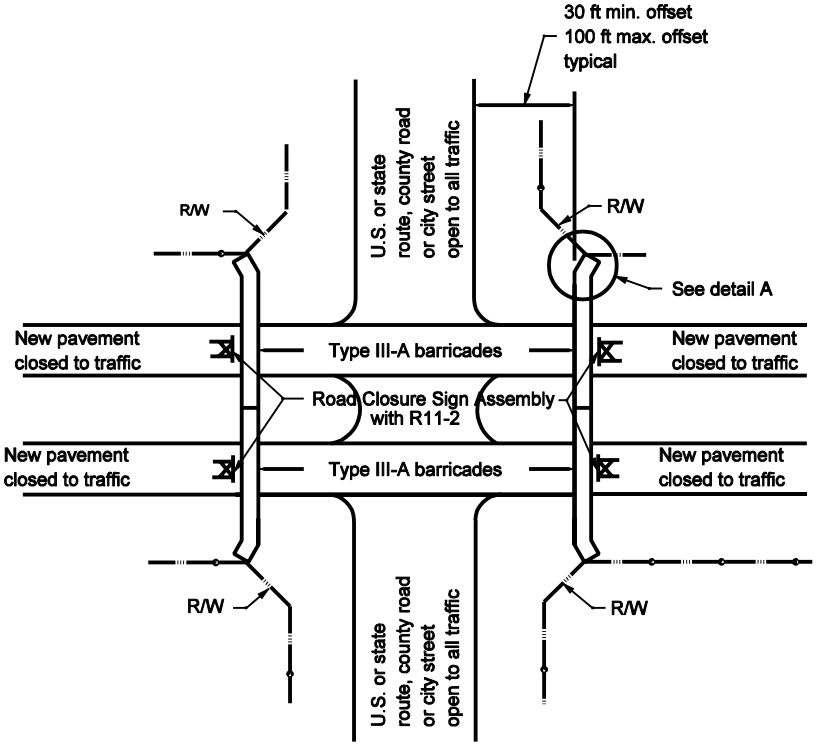

TEMPORARY CLOSURE OF BOTH NEW LANES OF PAVEMENT OF A DUAL LANE FACILITY

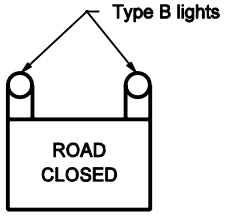

R 11-2

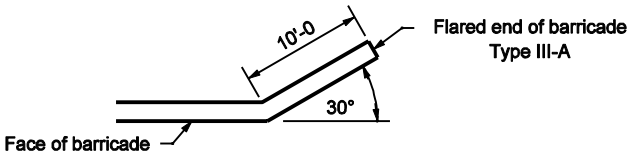

DETAIL A

INDIANA DEPARTMENT OF TRANSPORTATION

TEMPORARY CLOSURES

SEPTEMBER 2002

STANDARD DRAWING NO. E 801-TCTC-01

RICHARD L. VanCLEAVE REGISTERED No. 9750 STATE OF INDIANA PROFESSIONAL ENGINEER

DESIGN STANDARDS ENGINEER

/s/ Richard L VanCleave 9-03-02
DESIGN STANDARDS ENGINEER DATE

/s/ Richard K. Smutzer 9-03-02
CHIEF HIGHWAY ENGINEER DATE

GENERAL NOTES

1. See Standard Drawing E 801-TCLG-01 for General Notes and Legend.

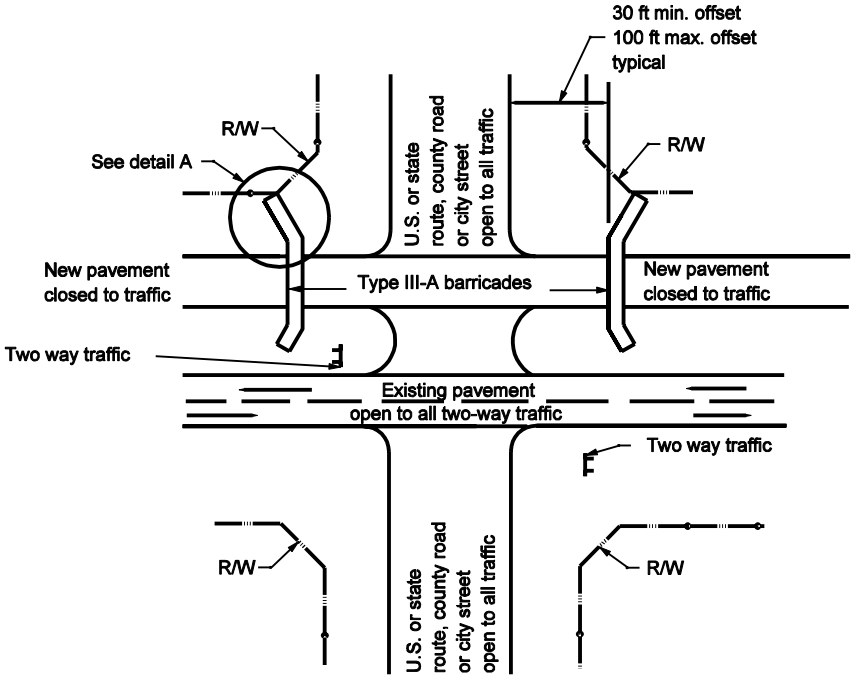

TEMPORARY CLOSURE OF ONE NEW LANE OF PAVEMENT OF A DUAL LANE FACILITY

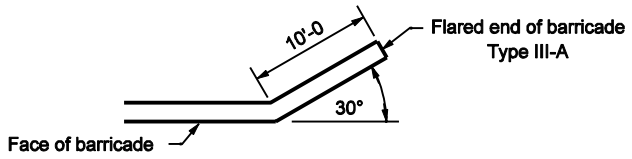

DETAIL A

INDIANA DEPARTMENT OF TRANSPORTATION

TEMPORARY CLOSURES

SEPTEMBER 2002

STANDARD DRAWING NO. E 801-TCTC-02

RICHARD L. VanCLEAVE REGISTERED No. 9750 STATE OF INDIANA PROFESSIONAL ENGINEER

DESIGN STANDARDS ENGINEER

/s/ Richard L. VanCleave 9-03-02
DESIGN STANDARDS ENGINEER DATE

/s/ Richard K. Smutzer 9-03-02
CHIEF HIGHWAY ENGINEER DATE

GENERAL NOTES

1. See Standard Drawing E 801-TCLG-01 for General Notes and Legend.

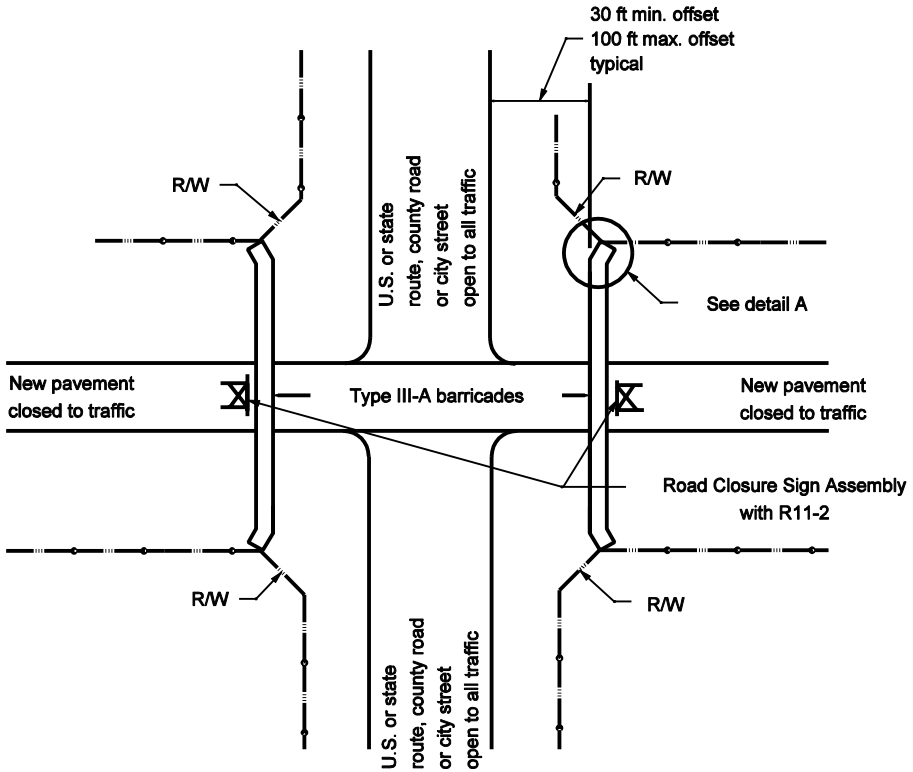

TEMPORARY CLOSURE OF NEW PAVEMENT

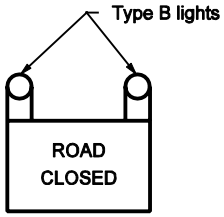

R 11-2

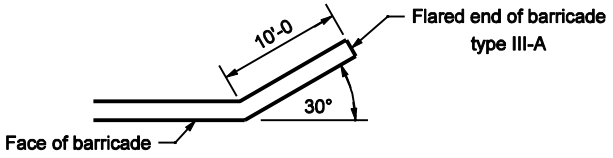

DETAIL A

INDIANA DEPARTMENT OF TRANSPORTATION

TEMPORARY CLOSURES

SEPTEMBER 2002

STANDARD DRAWING NO. E 801-TCTC-03

RICHARD L. VanCLEAVE REGISTERED No. 9750 STATE OF INDIANA PROFESSIONAL ENGINEER

DESIGN STANDARDS ENGINEER

/s/ Richard L. VanCleave 9-03-02
DESIGN STANDARDS ENGINEER DATE

/s/ Richard K. Smutzer 9-03-02
CHIEF HIGHWAY ENGINEER DATE

GENERAL NOTES

1. See Standard Drawing E 801-TCLG-01 for General Notes and Legend.

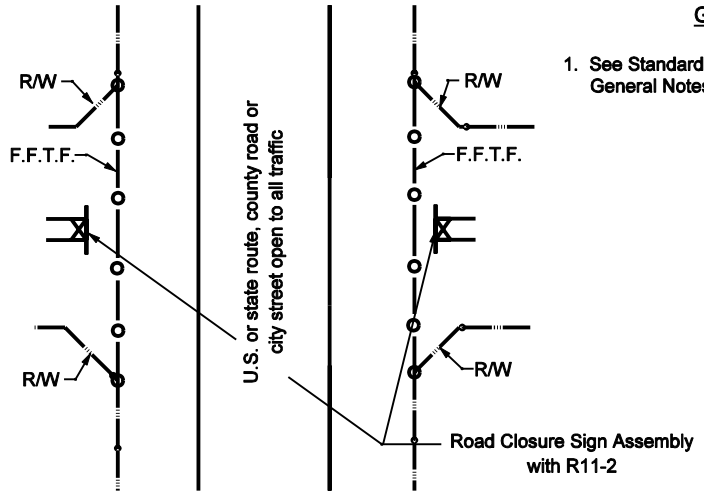

TEMPORARY CLOSURE FOR PROJECT FOLLOWING COMPLETION OF GRADING CONTRACT

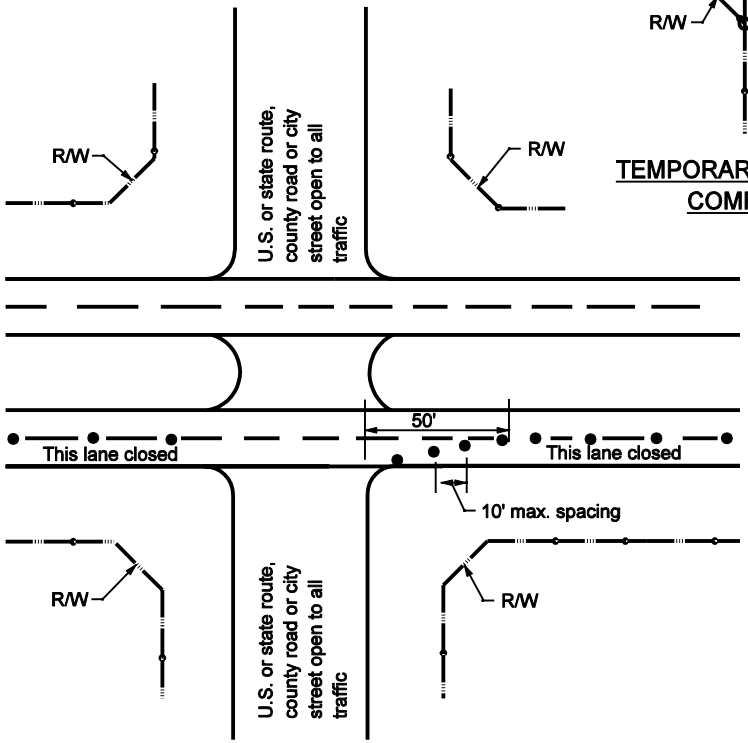

TEMPORARY CLOSURE OF A SINGLE LANE OF A DUAL LANE FACILITY

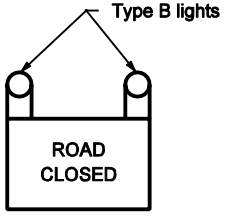

R 11-2

INDIANA DEPARTMENT OF TRANSPORTATION

TEMPORARY CLOSURES

SEPTEMBER 2002

STANDARD DRAWING NO. E 801-TCTC-04

RICHARD L. VanCLEAVE REGISTERED No. 9750 STATE OF INDIANA PROFESSIONAL ENGINEER
DESIGN STANDARDS ENGINEER

/s/ Richard L. VanCleave 9-03-02
DESIGN STANDARDS ENGINEER DATE

/s/ Richard K. Smutzer 9-03-02
CHIEF HIGHWAY ENGINEER DATE

NOTES:

1. See Standard Drawing E 801-TCLG-01 for Legend and General Notes.
2. See Standard Drawing E 801-TCDV-05 for sign mounting.

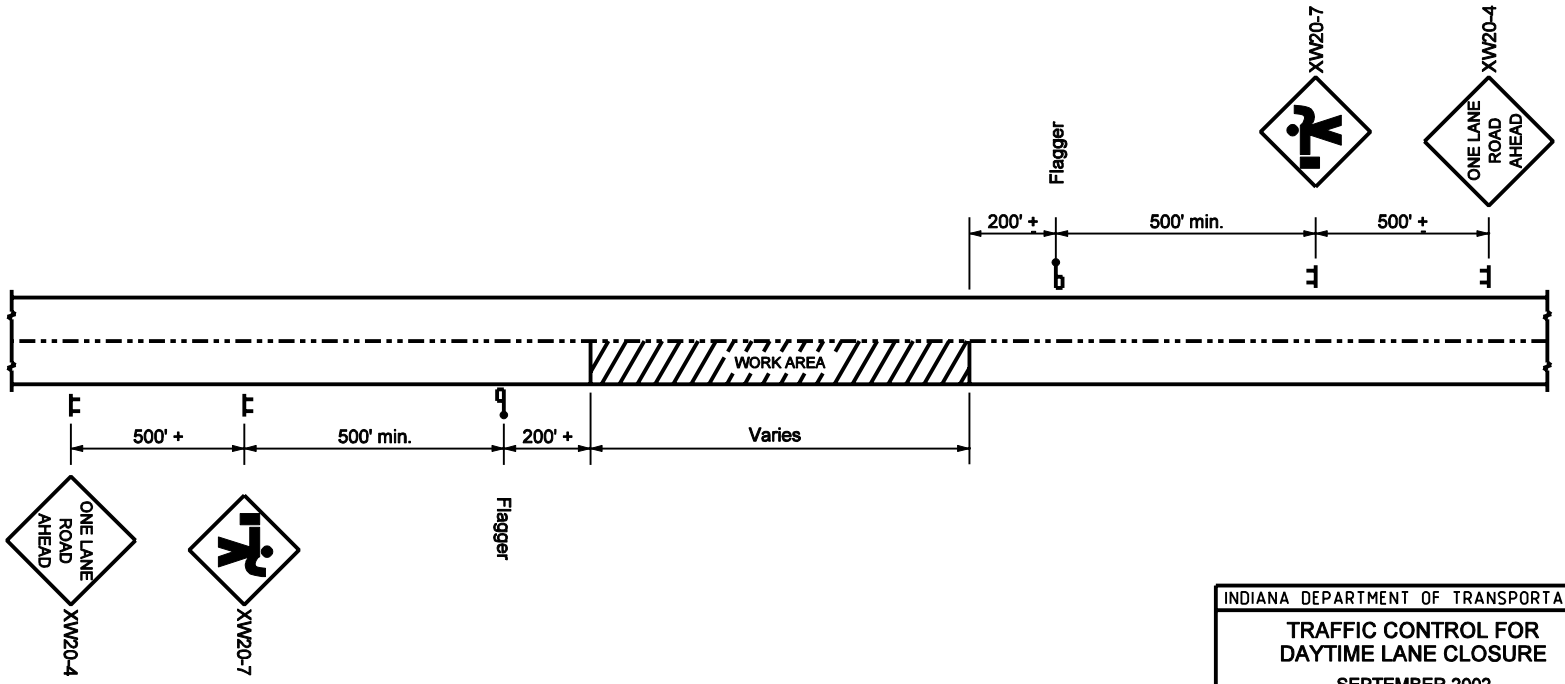

TWO-LANE ROADWAY, TWO WAY TRAFFIC

INDIANA DEPARTMENT OF TRANSPORTATION

TRAFFIC CONTROL FOR DAYTIME LANE CLOSURE

SEPTEMBER 2002

STANDARD DRAWING NO. E 801-TCTC-05

RICHARD L. VANCLEAVE REGISTERED No. 9750 STATE OF INDIANA PROFESSIONAL ENGINEER

DESIGN STANDARDS ENGINEER

/s/ Richard L. VanCleave 9-03-02
DESIGN STANDARDS ENGINEER DATE

/s/ Richard K. Smutzer 9-03-02
CHIEF HIGHWAY ENGINEER DATE

MULTI-LANE DIVIDED HIGHWAY

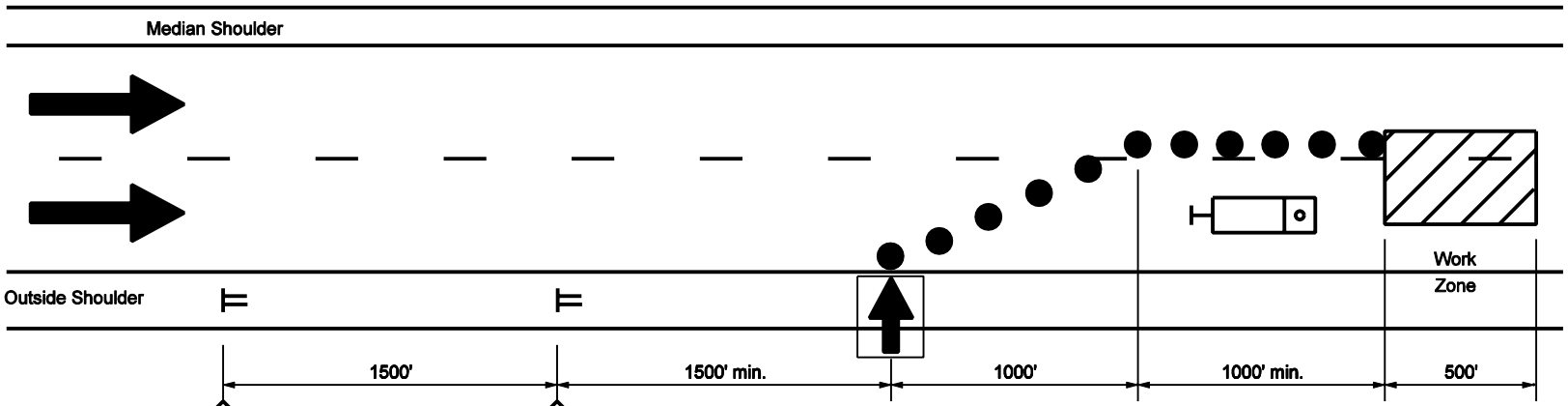

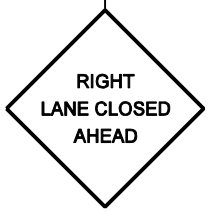

XW20-5 (R)
(R or L)

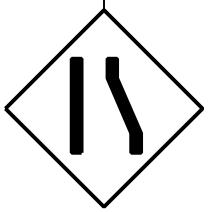

XW4-2 (R)
(R or L)

GENERAL NOTES

1. Distances shown are approximate and may be adjusted as directed.
2. Strobe lights will be required on all vehicles.
3. 

XW103-1
Optional sign to be placed when directed.
4. Lane closure length shall be a maximum of 3 mi. as directed by Engineer to meet field conditions.
5. See Standard Drawing E 801-TCDV-01 for channelizing devices.
6. See Standard Drawing E 801-TCDV-05 for sign mounting.

LEGEND


Flashing Arrow Sign


Truck of 24,00 lb gross vehicular weight with truck mounted attenuator

Channelizing device

INDIANA DEPARTMENT OF TRANSPORTATION

MAINTENCE OF TRAFFIC FOR RPM CASTING INSTALLATION

SEPTEMBER 2002

STANDARD DRAWING NO. E 801-TCTC-06

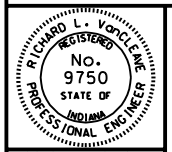

DESIGN STANDARDS ENGINEER

/s/ Richard L VanCleave 9-03-02
DESIGN STANDARDS ENGINEER DATE

/s/ Richard K. Smutzer 9-03-02
CHIEF HIGHWAY ENGINEER DATE

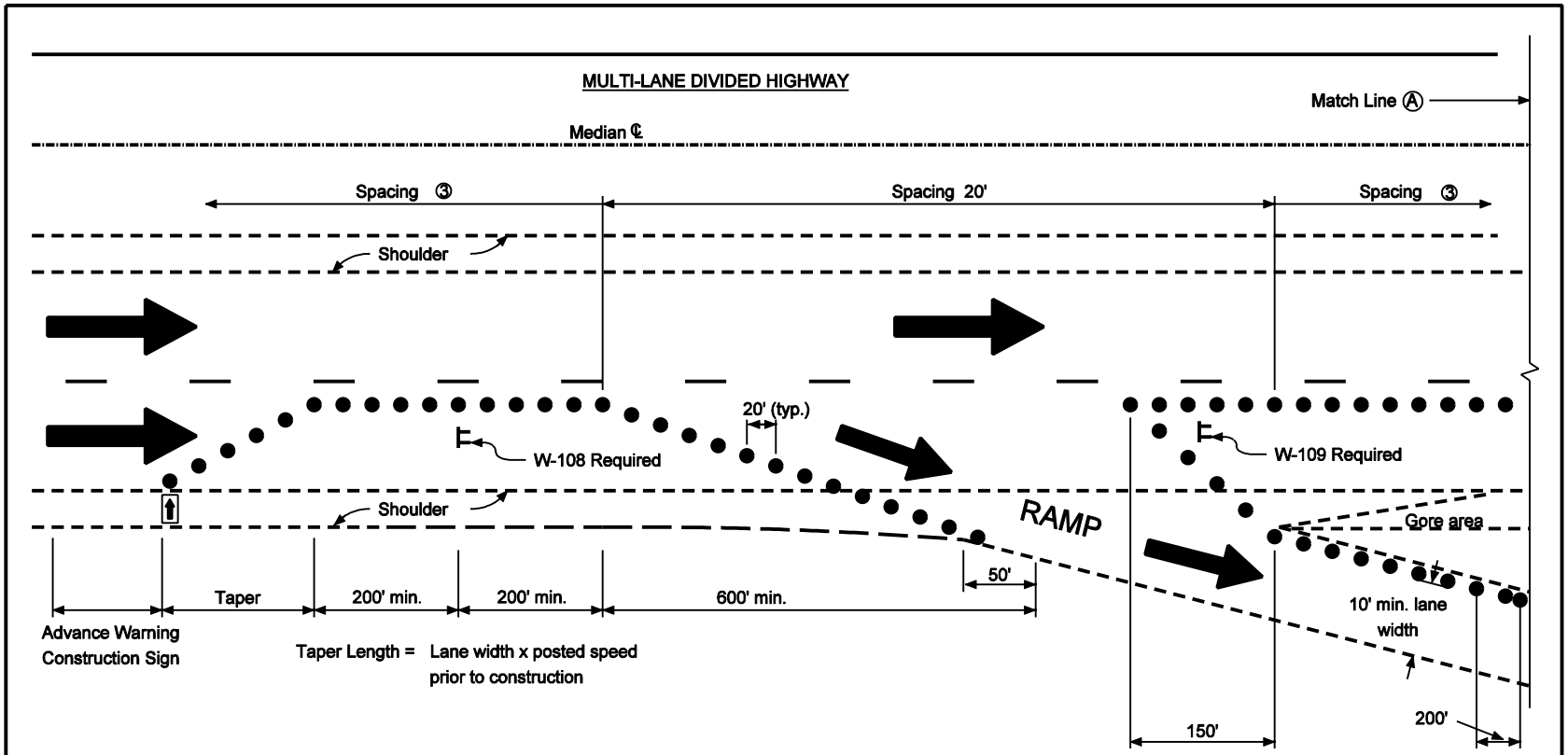

LEGEND

- ● Cones for daytime operations
  Drums for nighttime operations
- ⬅ Flashing arrow sign

TRAFFIC MAINTENANCE PROCEDURE

1. The right lane shall be closed for the full length of the interchange before deceleration lane and/or gore area work begins.
2. Traffic shall be maintained on all exit and entrance ramps.
3. See Standard Drawing E 801-TCLG-01 for cone and drum spacing.
4. Distances shown are approximate and may be adjusted as directed.
5. See Standard Drawing E 801-TCTC-08 for Match Line Ⓐ.

INDIANA DEPARTMENT OF TRANSPORTATION

MAINTENANCE OF TRAFFIC FOR RPM CASTING REPLACEMENT

SEPTEMBER 2002

STANDARD DRAWING NO. E 801-TCTC-07

RICHARD L. VanCLEAVE REGISTERED No. 9750 STATE OF INDIANA PROFESSIONAL ENGINEER
DESIGN STANDARDS ENGINEER

/s/ Richard L VanCleave 9-03-02
DESIGN STANDARDS ENGINEER DATE

/s/ Richard K. Smulzer 9-03-02
CHIEF HIGHWAY ENGINEER DATE

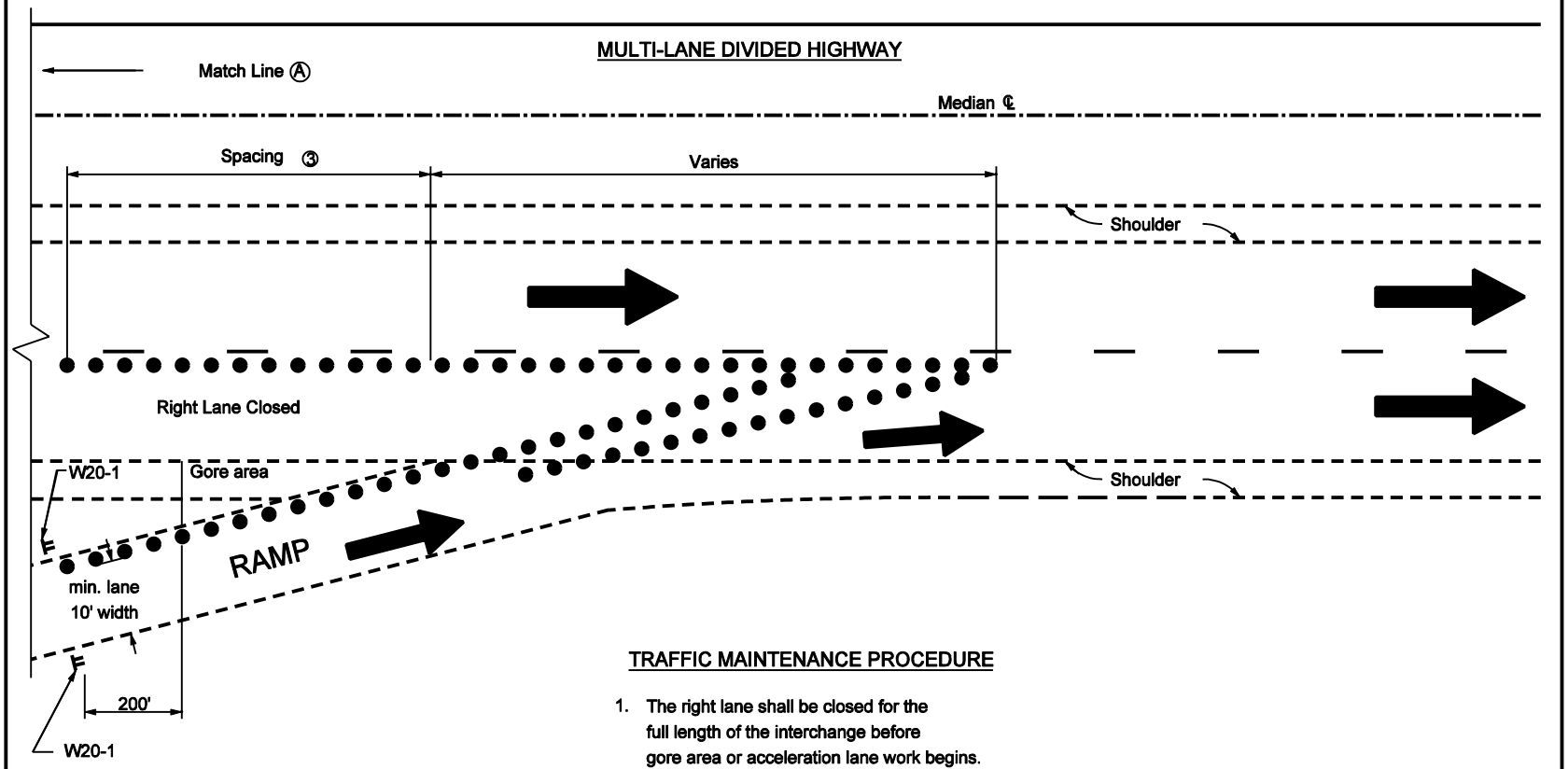

LEGEND

● Cones for daytime operations
Drums for nighttime operations

TRAFFIC MAINTENANCE PROCEDURE

1. The right lane shall be closed for the full length of the interchange before gore area or acceleration lane work begins. The right lane closure shall not to extend through two adjacent interchanges.
2. Traffic shall be maintained on all exit and entrance ramps.
3. See Standard Drawing E 801-TCLG-01 for cone and drum spacing.
4. Distances shown are approximate and may be adjusted as directed.
5. See Standard Drawing E 801-TCTC-07 for Match Line Ⓐ .

INDIANA DEPARTMENT OF TRANSPORTATION

MAINTAINCE OF TRAFFIC FOR RPM CASTING REPLACEMENT

SEPTEMBER 2002

STANDARD DRAWING NO. E 801-TCTC-08

RICHARD L. VanCLEAVE REGISTERED No. 9750 STATE OF INDIANA PROFESSIONAL ENGINEER
DESIGN STANDARDS ENGINEER

/s/ Richard L VanCleave 9-03-02
DESIGN STANDARDS ENGINEER DATE

/s/ Richard K. Smulzer 9-03-02
CHIEF HIGHWAY ENGINEER DATE

MULTI–LANE DIVIDED HIGHWAY

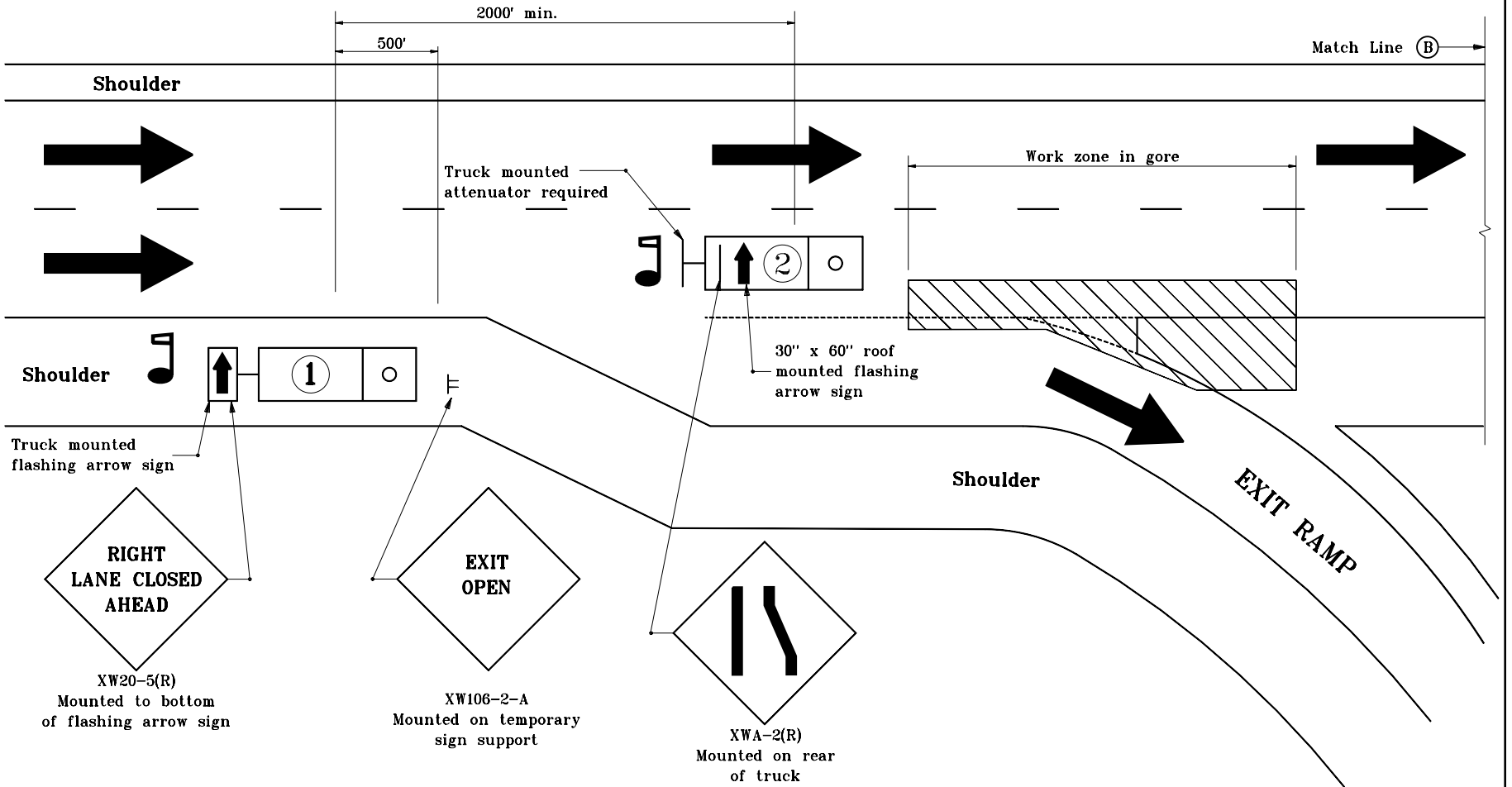

GENERAL NOTES

1. Flaggers shall be used while trucks are stopped.
2. Strobe lights shall be used on all vehicles.
3. Distances shown are approximate and may be adjusted as directed.

LEGEND

Flagger

Truck which may be a pickup

Truck which shall be 24,000 lb GVW or greater

INDIANA DEPARTMENT OF TRANSPORTATION

MAINTENANCE OF TRAFFIC FOR RPM REFLECTOR REPLACEMENT

MAY 2000

STANDARD DRAWING NO. **E 801–TCTC–09**

ANTHONY L. UREMOVICH REGISTERED No. 18095 STATE OF INDIANA PROFESSIONAL ENGINEER

DESIGN STANDARDS ENGINEER

/s/ Anthony L. Uremovich 5–01–00
DESIGN STANDARDS ENGINEER — DATE

/s/ Firooz Zandi 5–01–00
CHIEF HIGHWAY ENGINEER — DATE

MULTI–LANE DIVIDED HIGHWAY

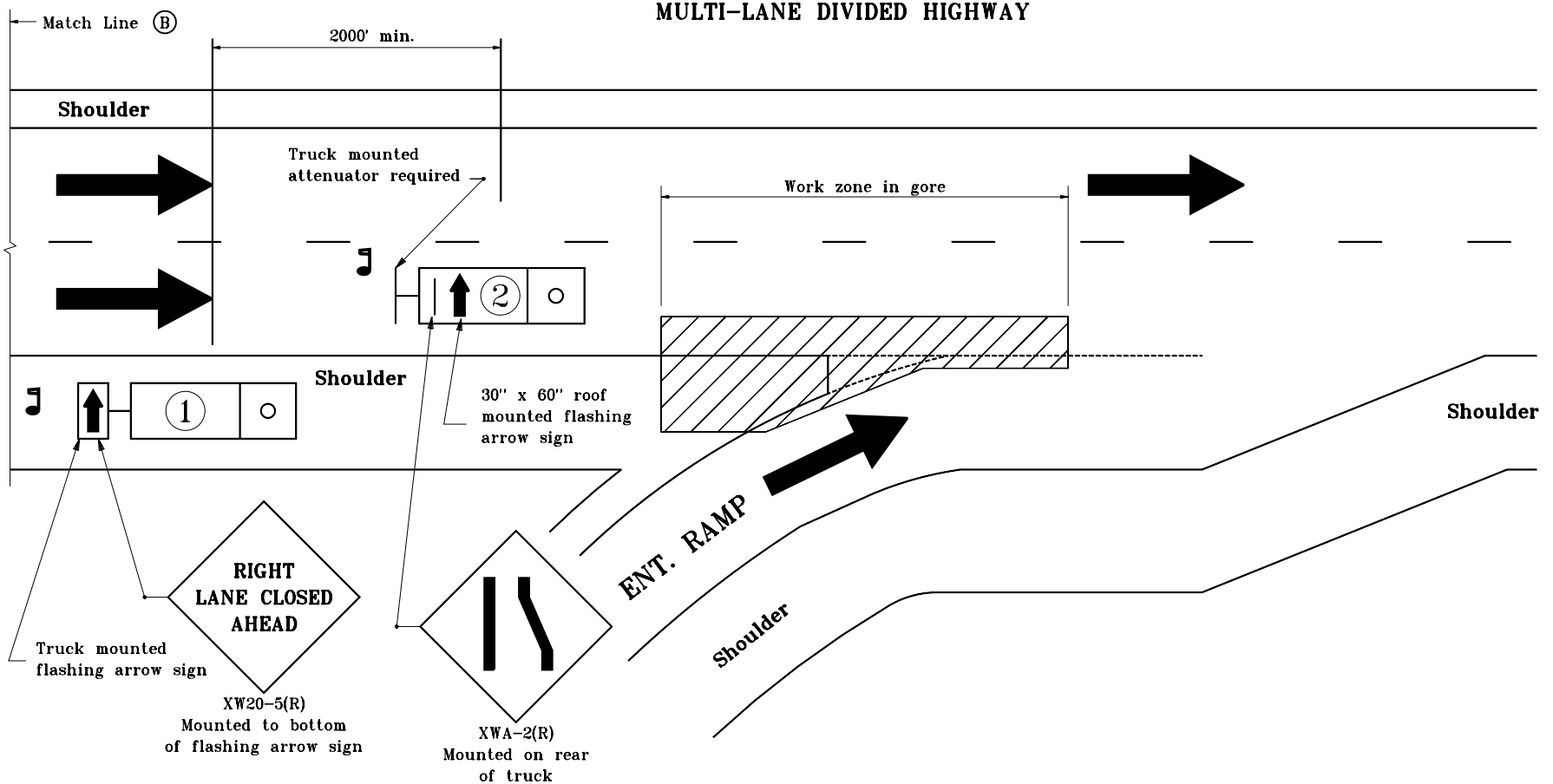

GENERAL NOTES

1. Flaggers shall be used while trucks are stopped.
2. Strobe lights shall be used on all vehicles.
3. Distances shown are approximate and may be adjusted as directed.

LEGEND

- Flagger
- Truck which may be a pickup
- Truck which shall be 24,000 lb GVM or greater

INDIANA DEPARTMENT OF TRANSPORTATION

MAINTENANCE OF TRAFFIC FOR RPM REFLECTOR REPLACEMENT

MAY 2000

STANDARD DRAWING NO. **E 801–TCTC–10**

ANTHONY L. UREMOVICH REGISTERED No. 18095 STATE OF INDIANA PROFESSIONAL ENGINEER

DESIGN STANDARDS ENGINEER

/s/ Anthony L. Uremovich 5–01–00
DESIGN STANDARDS ENGINEER — DATE

/s/ Firooz Zandi 5–01–00
CHIEF HIGHWAY ENGINEER — DATE

GENERAL NOTES:

1. Signing pattern typical both sides of roadway, for each direction of travel.
2. See Standard Drawing E 801-TCDV-01 for tubular marker details.

LEGEND

① R4-1-B "Do Not Pass"

② XW6-3 two-way traffic symbol

◯ Tubular markers

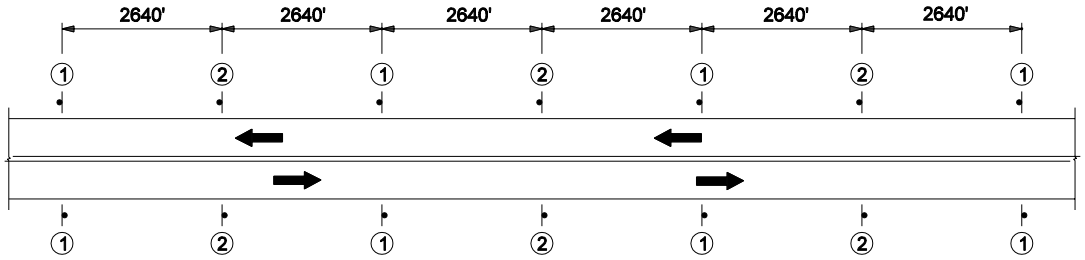

CONSTRUCTION SIGNS LOCATION DETAIL

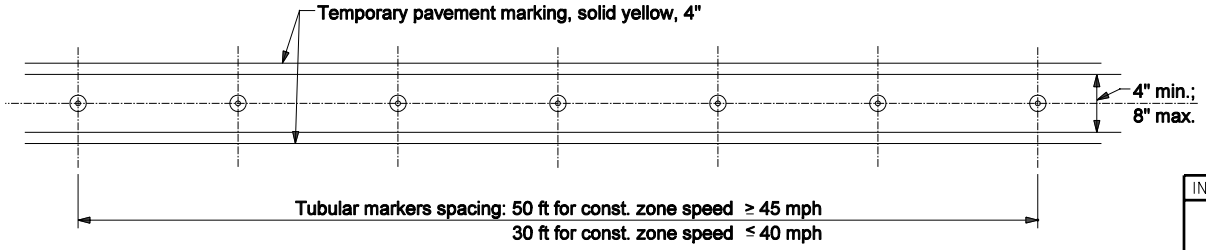

TUBULAR MARKERS ALONG CENTERLINE OF PAVEMENT LAYOUT

TWO LANE, TWO WAY OPPOSING TRAFFIC

INDIANA DEPARTMENT OF TRANSPORTATION

TUBULAR MARKER DELINEATION

MARCH 2006

STANDARD DRAWING NO. E 801-TCTC-11

RICHARD L. VanCLEAVE REGISTERED No. 9750 STATE OF INDIANA PROFESSIONAL ENGINEER

DESIGN STANDARDS ENGINEER

/s/ Richard L. VanCleave 3-01-06
DESIGN STANDARDS ENGINEER DATE

/s/ Richard K. Smutzer 3-01-06
CHIEF HIGHWAY ENGINEER DATE

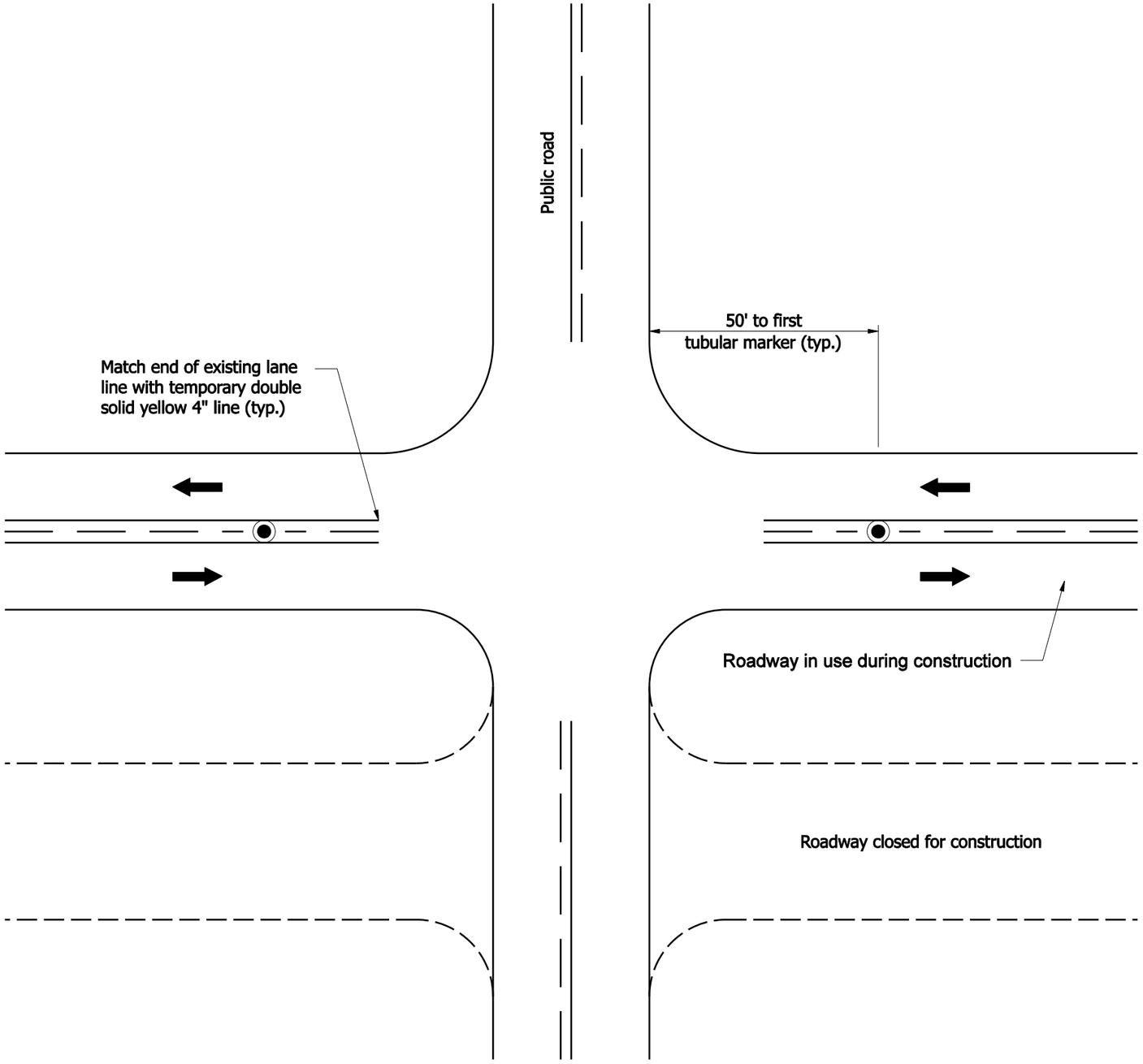

GENERAL NOTES:

1. See Standard Drawing E 801-TCDV-01 for tubular marker details.

LEGEND

Tubular markers

INDIANA DEPARTMENT OF TRANSPORTATION

TUBULAR MARKER DELINEATION AT INTERSECTION

SEPTEMBER 2007

STANDARD DRAWING NO. E 801-TCTC-12

RICHARD L. VanCLEAVE REGISTERED No. 9750 STATE OF INDIANA PROFESSIONAL ENGINEER

DESIGN STANDARDS ENGINEER

/s/ Richard L. VanCleave 09/04/07
DESIGN STANDARDS ENGINEER DATE

/s/ Mark A. Miller 09/04/07
CHIEF HIGHWAY ENGINEER DATE

GENERAL NOTES :

1. Shoulder cross slope in superelevated section shall be as follows:
   Where the high side is on the outside of the curve:
   4% ↘ for horizontal curve radius R ≥ 3820 ft
   2% ↘ for 2870 ft ≤ R ≤ 3820 ft
   Where the high side of the superelevated pavement is on the median side of the curve; maintain adjacent travel lane's superelevation transition rate or superelevation rate.
   The low side of a superelevated pavement shall maintain the adjacent travel lane's superelevation transition rate or superelevation rate.

2. See Standard Drawing 801-TCDV-01 for channelizing device.

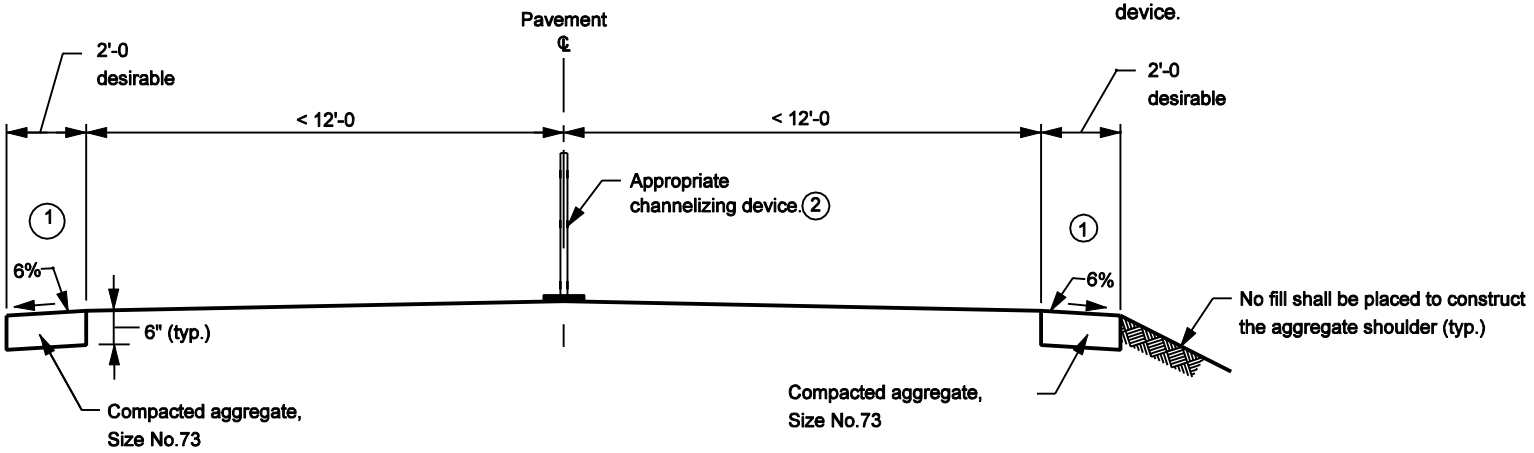

INDIANA DEPARTMENT OF TRANSPORTATION

TEMPORARY SHOULDER FOR TRAFFIC MAINTENANCE

SEPTEMBER 2002

STANDARD DRAWING NO. E 801-TCTS-01

RICHARD L. VanCLEAVE REGISTERED No. 9750 STATE OF INDIANA PROFESSIONAL ENGINEER
DESIGN STANDARDS ENGINEER

/s/ Richard L. VanCleave 9-03-02
DESIGN STANDARDS ENGINEER DATE

/s/ Richard K. Smutzer 9-03-02
CHIEF HIGHWAY ENGINEER DATE

INDEX	
SHEET NO.	SUBJECT
1	Index
2	Plan & Elevation
3	Truss Sections, Member Size Table
4	Table of Dimensions, Spans 34' thru 81'
5	Table of Dimensions, Spans 82' thru 130' & Camber
6	Chord Connections and Weld Details
7	Flange & Chord End Plate Details
8	End Support Upper Chord Connection Details
9	End Support Lower Chord Connection Details
10	End Support Base Plate and I.D. Tag Details
11	End Support Handhole, Top Cap, and J-Hook Details
12	Anchor Plates, Anchor Bolts, and Metal Skirt Details
13	Ladder Details
14	Ladder Details
15	Security Gate Details
16	Walkway Grating Details
17	Walkway Grating Details
18	Walkway Grating Details
19	Wiring Layout Details
20	Spread Foundation at 33" Concrete Barrier Wall
21	Spread Foundation at 45" Concrete Barrier Wall
22	Spread Foundation at Median or Shoulder, 36" Height
23	Spread Foundations Quantities

INDIANA DEPARTMENT OF TRANSPORTATION

DYNAMIC MESSAGE SIGN STRUCTURE
DRAWING INDEX

SEPTEMBER 2013

STANDARD DRAWING NO. E 802-DMSS-01

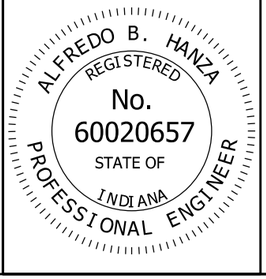

/s/ Alfredo B. Hanza 02/05/13
DESIGN STANDARDS ENGINEER DATE

/s/ Mark A. Miller 03/27/13
CHIEF ENGINEER DATE

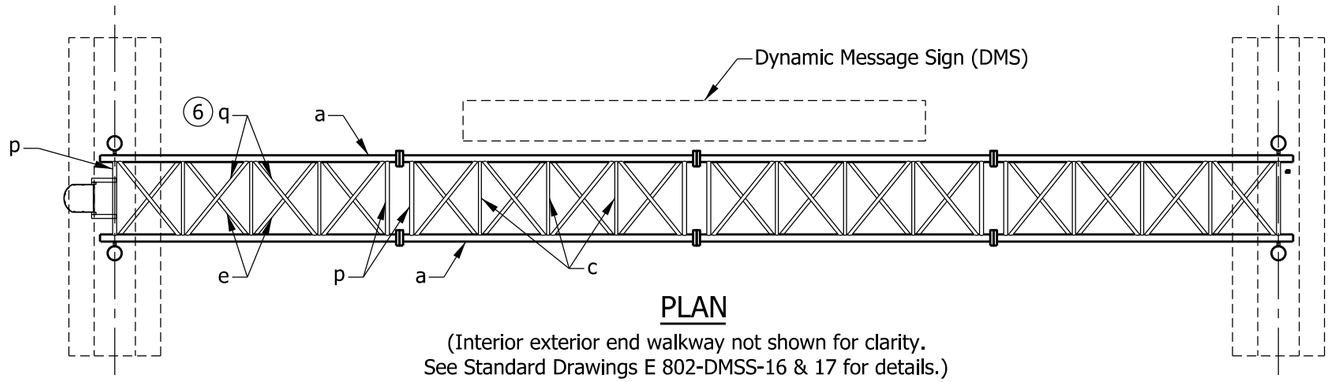

PLAN

(Interior exterior end walkway not shown for clarity.
See Standard Drawings E 802-DMSS-16 & 17 for details.)

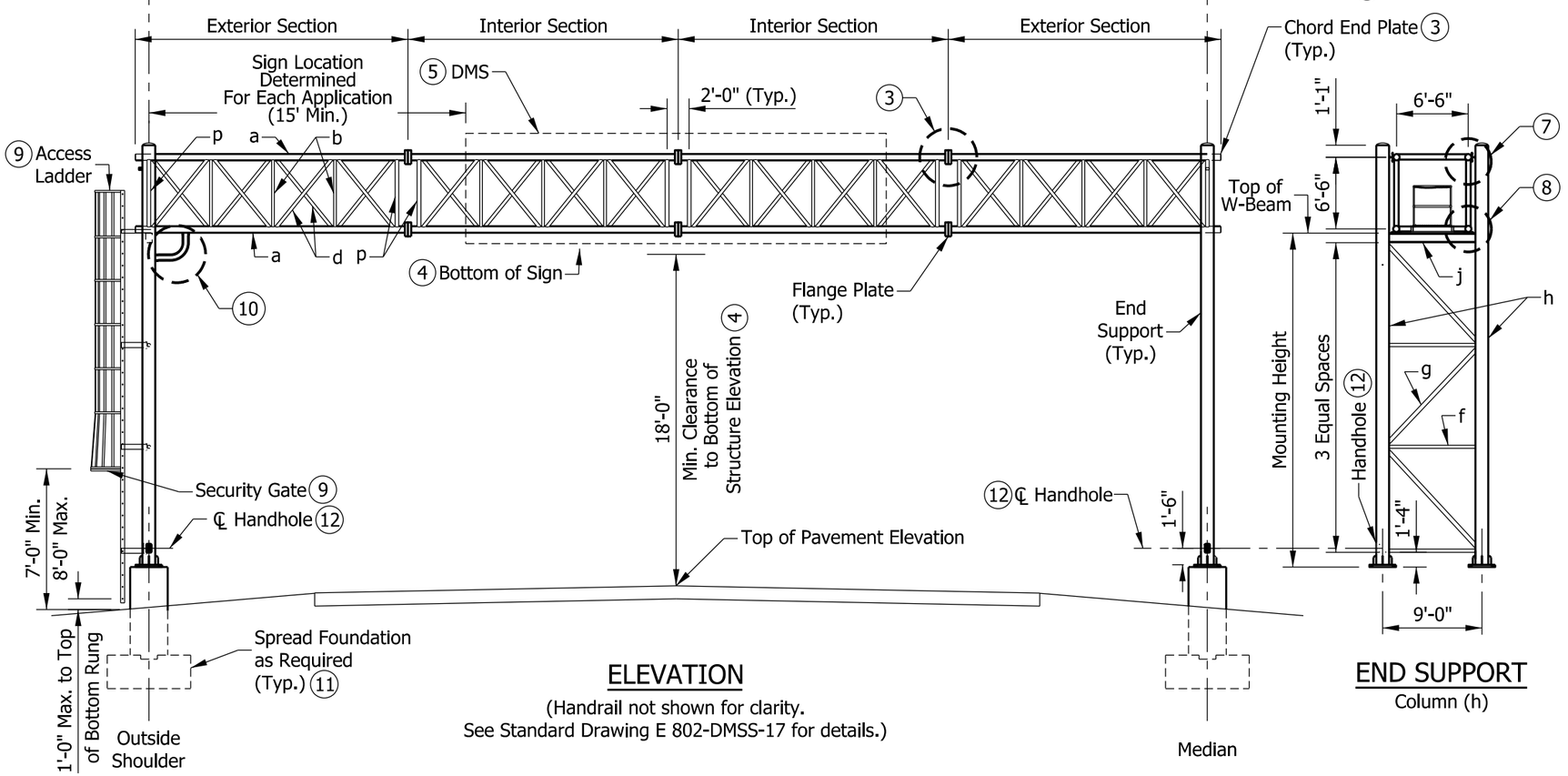

ELEVATION

(Handrail not shown for clarity.
See Standard Drawing E 802-DMSS-17 for details.)

END SUPPORT

Column (h)

NOTES:

1. See Standard Drawings E 802-DMSS-03 for isometric view and table with member sizes.
2. Max. deviation of any chord from a straight line in any section shall be 1/8 in. Box truss to be max. of 3/8 in. out of a straight line over the entire length of the structure in the vertical plane.

(3) See Standard Drawings E 802-DMSS-06 and -07 for chord connection welds, flange, and chord end plate details.

(4) See Standard Drawing E 802-DMSS-16 for the bottom of structure elevation and grating details.

(5) Maximum sign area is 300 sq. ft.

(6) See Standard Drawing E 802-DMSS-03 for counter diagonals on exterior truss sections.

(7) See Standard Drawing E 802-DMSS-08 for upper chord connections details.

(8) See Standard Drawing E 802-DMSS-09 for lower chord connections details.

(9) See Standard Drawing E 802-DMSS-13, -14, and -15 for access ladder and security gate details.

(10) See Standard Drawing E 802-DMSS-19 for wiring layout and wire-outlet details.

(11) See Standard Drawings E 802-DMSS-20 through -23 for spread foundation details.

(12) See Standard Drawing E 802-DMSS-11 for handhole detail.

LEGEND

TRUSS MEMBERS (ALUMINUM)
- a - Chords
- b - Verticals
- c - Horizontals
- d - Vertical Diagonals
- e - Horizontal Diagonals
- p - End Verticals and Horizontals
- q - Counter Diagonals (6)

END SUPPORT MEMBERS (STEEL)
- f - Horizontals
- g - Diagonals
- h - Columns
- j - W-Beam

INDIANA DEPARTMENT OF TRANSPORTATION

DYNAMIC MESSAGE SIGN STRUCTURE PLAN & ELEVATION

SEPTEMBER 2013

STANDARD DRAWING NO. E 802-DMSS-02

ALFREDO B. HANZA REGISTERED No. 60020657 STATE OF INDIANA PROFESSIONAL ENGINEER

/s/ Alfredo B. Hanza — 02/05/13
DESIGN STANDARDS ENGINEER — DATE

/s/ Mark A. Miller — 03/27/13
CHIEF ENGINEER — DATE

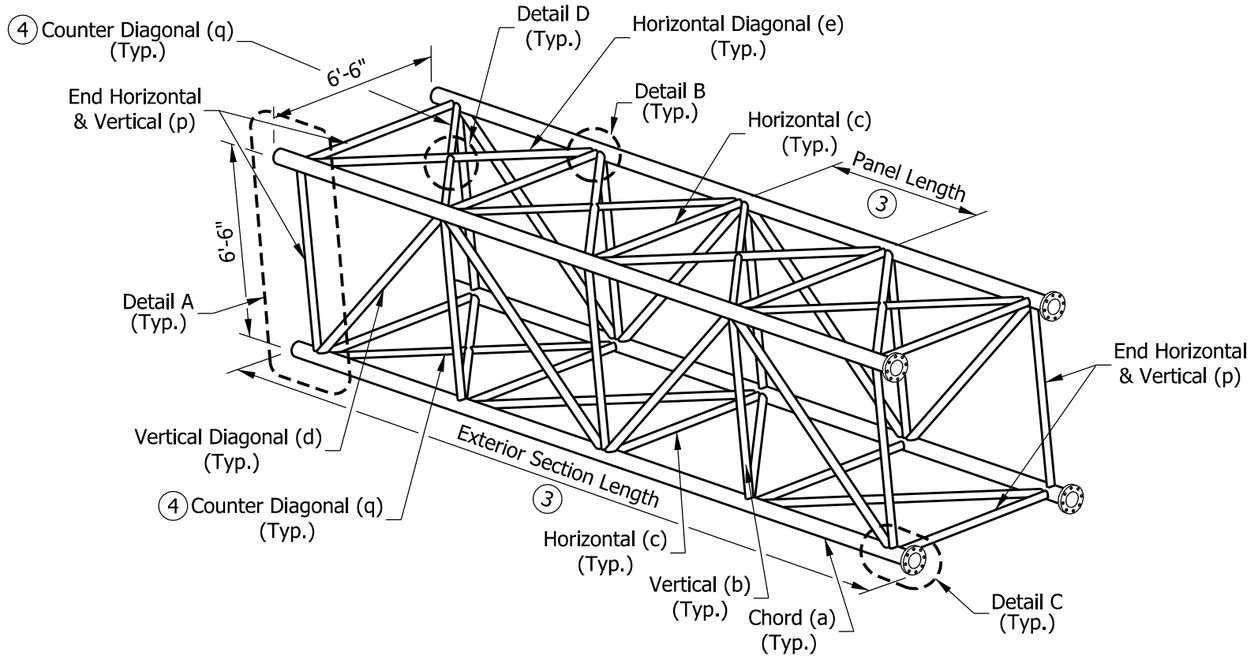

TYPICAL EXTERIOR TRUSS SECTION

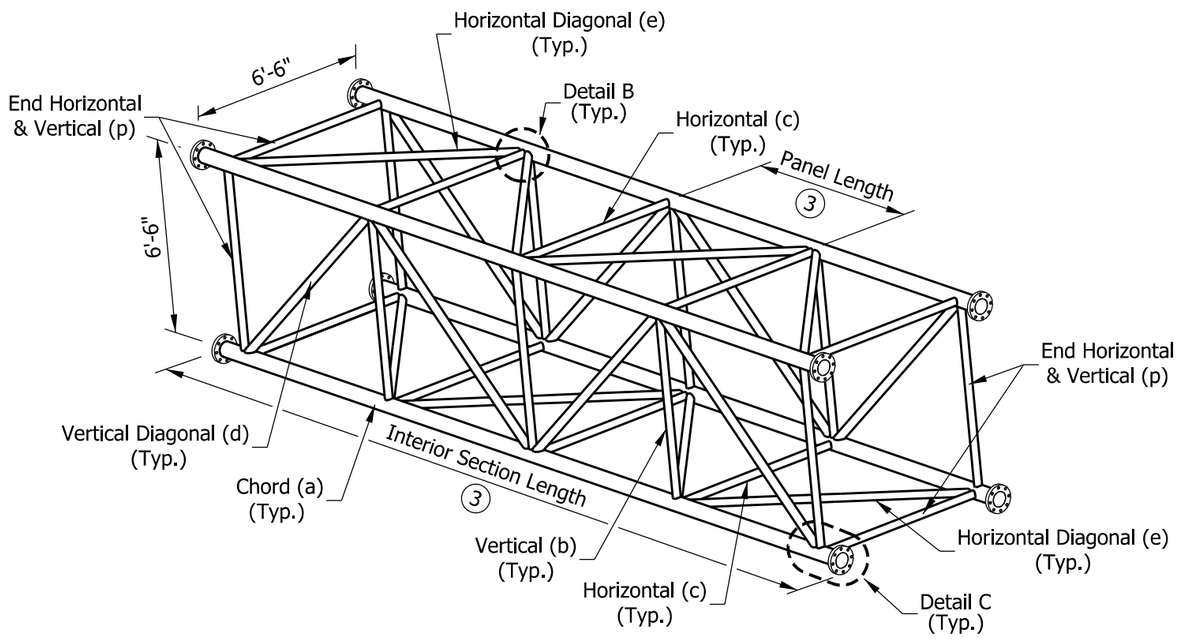

TYPICAL INTERIOR TRUSS SECTION

NOTES:

1. See Standard Drawing E 802-DMSS-06 for Details A through D.
2. Truss members to be aluminum. End support members to be steel. Steel pipe diameters shown in table are nominal pipe sizes.
3. Number of panels and sections varies. See Standard Drawing E 802-DMSS-04 and -05 for recommended dimensions.
4. Counter Diagonal (q) shall be provided in exterior sections at the top of each panel and at the bottom of end panel only as shown. It is not required in interior sections.
5. See Standard Drawing E 802-DMSS-02 for end support members.

MAX. SPAN = 130 ft. MAX. SIGN AREA = 300 sq. ft.
MAX. MOUNTING HEIGHT = 24'-6"

ALUMINUM TRUSS MEMBERS		
MEMBER	MARK	O.D. (IN.) x WALL THK. (IN.)
CHORD	a	7 x 0.375
VERTICAL	b	3 x 0.250
HORIZONTAL	c	4 x 0.250
VERTICAL DIAGONAL	d	3.5 x 0.500
HORIZONTAL DIAGONAL	e	4 x 0.500
END VERTICAL and HORIZONTAL	p	4 x 0.375
COUNTER DIAGONAL (SEE NOTE 4)	q	2.5 x 0.500
STEEL END-SUPPORT MEMBERS		
COLUMN	h	14 x 0.375
HORIZONTAL	f	3.5 x 0.216
DIAGONAL	g	4.5 x 0.438
W-BEAM	j	W10 x 68

INDIANA DEPARTMENT OF TRANSPORTATION

DYNAMIC MESSAGE SIGN STRUCTURE
TRUSS SECTIONS, MEMBER SIZE TABLE

SEPTEMBER 2013

STANDARD DRAWING NO. E 802-DMSS-03

ALFREDO B. HANZA
REGISTERED
No. 60020657
STATE OF INDIANA
PROFESSIONAL ENGINEER

/s/ Alfredo B. Hanza 02/05/13
DESIGN STANDARDS ENGINEER DATE

/s/ Mark A. Miller 03/27/13
CHIEF ENGINEER DATE

DIMENSIONS FOR DYNAMIC MESSAGE SIGN STRUCTURES (34' THRU 81')

SPAN	EXTERIOR SECTIONS					INTERIOR SECTIONS			
SPAN-TRUSS LENGTH, (FT)	NO. OF EXT. SECTIONS	NO. OF PANELS PER SECTION	VARIABLE END DIMEN.	PANEL LENGTH	SECTION LENGTH	NO. OF INT. SECTIONS	NO. OF PANELS PER SECTION	PANEL LENGTH	SECTION LENGTH
34	1	6	6"	5'-6"	35'-6"	0			
35	1	6	6"	5'-8"	36'-6"	0			
36	2	3	6"	5'-6"	18'-9"	0			
37	2	3	6"	5'-8"	19'-3"	0			
38	2	3	6"	5'-10"	19'-9"	0			
39	2	3	6"	6'-0"	20'-3"	0			
40	2	3	6"	6'-2"	20'-9"	0			
41	2	3	6"	6'-4"	21'-3"	0			
42	2	3	6"	6'-6"	21'-9"	0			
43	2	4	6"	5'-0"	22'-3"	0			
44	2	4	6"	5'-1 1/2"	22'-9"	0			
45	2	4	6"	5'-3"	23'-3"	0			
46	2	4	6"	5'-4 1/2"	23'-9"	0			
47	2	4	6"	5'-6"	24'-3"	0			
48	2	4	6"	5'-7 1/2"	24'-9"	0			
49	2	4	6"	5'-9"	25'-3"	0			
50	2	4	6"	5'-10 1/2"	25'-9"	0			
51	2	4	6"	6'-0"	26'-3"	0			
52	2	4	6"	6'-1 1/2"	26'-9"	0			
53	2	4	6"	6'-3"	27'-3"	0			
54	2	4	6"	6'-4 1/2"	27'-9"	0			
55	2	4	6"	6'-6"	28'-3"	0			
56	2	5	5 1/4"	5'-3 3/4"	28'-9"	0			
57	2	5	6 1/4"	5'-4 3/4"	29'-3"	0			
58	2	5	6"	5'-6"	29'-9"	0			
59	2	5	5 3/4"	5'-7 1/4"	30'-3"	0			
60	2	5	5 1/2"	5'- 8 1/2"	30'-9"	0			
61	2	5	6 1/2"	5'-9 1/2"	31'-3"	0			
62	2	5	6 1/4"	5'-10 3/4"	31'-9"	0			
63	2	5	6"	6'-0"	32'-3"	0			
64	2	5	5 3/4"	6'-1 1/4"	32'-9"	0			
65	2	5	5 1/2"	6'-2 1/2"	33'-3"	0			
66	2	5	5 1/4"	6'-3 3/4"	33'-9"	0			
67	2	5	5"	6'-5"	34'-3"	0			
68	2	5	6"	6'-6"	34'-9"	0			
69	2	4	6"	5'-4"	23'-7"	1	4	5'-4"	23'-4"
70	2	4	6"	5'-5"	23'-11"	1	4	5'-5"	23'-8"
71	2	4	6"	5'-6"	24'-3"	1	4	5'-6"	24'-0"
72	2	4	6"	5'-7"	24'-7"	1	4	5'-7"	24'-4"
73	2	4	6"	5'-8"	24'-11"	1	4	5'-8"	24'-8"
74	2	4	6"	5"-9"	25'-3"	1	4	5"-9"	25'-0"
75	2	4	6"	5'-10"	25'-7"	1	4	5'-10"	25'-4"
76	2	4	6"	5'-11"	25'-11"	1	4	5'-11"	25'-8"
77	2	4	6"	6'-0"	26'-3"	1	4	6'-0"	26'-0"
78	2	4	6"	6'-1"	26'-7"	1	4	6'-1"	26'-4"
79	2	4	6"	6'-2"	26'-11"	1	4	6'-2"	26'-8"
80	2	4	6"	6'-3"	27'-3"	1	4	6'-3"	27'-0"
81	2	4	6"	6'-4"	27'-7"	1	4	6'-4"	27'-4"

NOTES:

1. The table of dimensions for a dynamic message sign structure is divided and put on two Standard Drawings E 802-DMSS-04 and -05. the table shows dimensions with all sections requirements accounted for.
2. All panels on a truss shall be the same length. The minimum panel length for all trusses is 5'-0" and the maximum is 6'-6".
3. A single interior section in a truss shall have an even number of panels to maintain the pattern of the vertical diagonals.
4. Use minimum number of sections for each truss, keeping the maximum section length at 35'-6".
5. See Standard Drawing E 802-DMSS-05 for required camber.

INDIANA DEPARTMENT OF TRANSPORTATION

DYNAMIC MESSAGE SIGN STRUCTURE
TABLE OF DIMENSIONS
SPANS 34' THRU 81'
SEPTEMBER 2013

STANDARD DRAWING NO. E 802-DMSS-04

ALFREDO B. HANZA
REGISTERED
No. 60020657
STATE OF INDIANA
PROFESSIONAL ENGINEER

/s/ Alfredo B. Hanza 02/05/13
DESIGN STANDARDS ENGINEER DATE

/s/ Mark A. Miller 03/27/13
CHIEF ENGINEER DATE

DIMENSIONS FOR DYNAMIC MESSAGE SIGN STRUCTURES (82' THRU 130')

SPAN	EXTERIOR SECTIONS					INTERIOR SECTIONS			
SPAN-TRUSS LENGTH, (FT)	NO. OF EXT. SECTIONS	NO. OF PANELS PER SECTION	VARIABLE END DIMEN.	PANEL LENGTH	SECTION LENGTH	NO. OF INT. SECTIONS	NO. OF PANELS PER SECTION	PANEL LENGTH	SECTION LENGTH
82	2	4	6"	6'-5"	27'-11"	1	4	6'-5"	27'-8"
83	2	4	6"	6'-6"	28'-3"	1	4	6'-6"	28'-0"
84	2	5	5 3/4"	5'-7 3/4"	30'-5 1/2"	1	4	5'-7 3/4"	24'-7"
85	2	5	6 1/2"	5'-8 1/2"	30'-10"	1	4	5'-8 1/2"	24'-10"
86	2	5	5 1/2"	5'-9 1/2"	31'-2"	1	4	5'-9 1/2"	25'-2"
87	2	5	6 1/4"	5'-10 1/4"	31'-6 1/2"	1	4	5'-10 1/4"	25'-5"
88	2	5	7"	5'-11"	31'-11"	1	4	5'-11"	25'-8"
89	2	5	6"	6'-0"	32'-3"	1	4	6'-0"	26'-0"
90	2	5	5"	6'-1"	32'-7"	1	4	6'-1"	26'-4"
91	2	5	5 3/4"	6'-1 3/4"	32'-11 1/2"	1	4	6'-1 3/4"	26'-7"
92	2	5	6 1/2"	6'-2 1/2"	33'-4"	1	4	6'-2 1/2"	26'-10"
93	2	5	5 1/2"	6'-3 1/2"	33'-8"	1	4	6'-3 1/2"	27'-2"
94	2	5	6 1/4"	6'-4 1/4"	34'-0 1/2"	1	4	6'-4 1/4"	27'-5"
95	2	5	5 1/4"	6'-5 1/4"	34'-4 1/2"	1	4	6'-5 1/4"	27'-9"
96	2	5	6"	6'-6"	34'-9"	1	4	6'-6"	28'-0"
97	2	4	6"	5'-7 1/2"	24'-9"	2	4	5'-7 1/2"	24'-6"
98	2	4	6"	5'-8 1/4"	25'-0"	2	4	5'-8 1/4"	24'-9"
99	2	4	6"	5'-9"	25'-3"	2	4	5'-9"	25'-0"
100	2	4	6"	5'-9 3/4"	25'-6"	2	4	5'-9 3/4"	25'-3"
101	2	4	6"	5'-10 1/2"	25'-9"	2	4	5'-10 1/2"	25'-6"
102	2	4	6"	5'-11 1/4"	26'-0"	2	4	5'-11 1/4"	25'-9"
103	2	4	6"	6'-0"	26'-3"	2	4	6'-0"	26'-0"
104	2	4	6"	6'-0 3/4"	26'-6"	2	4	6'-0 3/4"	26'-3"
105	2	4	6"	6'-1 1/2"	26'-9"	2	4	6'-1 1/2"	26'-6"
106	2	4	6"	6'-2 1/4"	27'-0"	2	4	6'-2 1/4"	26'-9"
107	2	4	6"	6'-3"	27'-3"	2	4	6'-3"	27'-0"
108	2	4	6"	6'-3 3/4"	27'-6"	2	4	6'-3 3/4"	27'-3"
109	2	4	6"	6'-4 1/2"	27'-9"	2	4	6'-4 1/2"	27'-6"
110	2	4	6"	6'-5 1/4"	28'-0"	2	4	6'-5 1/4"	27'-9"
111	2	4	6"	6'-6"	28'-3"	2	4	6'-6"	28'-0"
112	2	5	6"	5'-3"	28'-6"	2	5	5'-3"	28'-3"
113	2	5	7"	5'-3 1/2"	28'-9 1/2"	2	5	5'-3 1/2"	28'-5 1/2"
114	2	5	5 1/2"	5'-4 1/4"	28'-11 3/4"	2	5	5'-4 1/4"	28'-9 1/4"
115	2	5	6 1/2"	5'-4 3/4"	29'-3 1/4"	2	5	5'-4 3/4"	28'-11 3/4"
116	2	5	5"	5'-5 1/2"	29'-5 1/2"	2	5	5'-5 1/2"	29'-3 1/2"
117	2	5	6"	5'-6"	29'-9"	2	5	5'-6"	29'-6"
118	2	5	5"	5'-6 1/2"	29'-10 1/2"	2	5	5'-6 1/2"	29'-8 1/2"
119	2	5	5 1/2"	5'-7 1/4"	30'-2 3/4"	2	5	5'-7 1/4"	30'-0 1/4"
120	2	5	6 1/2"	5'-7 3/4"	30'-6 1/4"	2	5	5'-7 3/4"	30'-2 3/4"
121	2	5	5"	5'-8 1/2"	30'-8 1/2"	2	5	5'-8 1/2"	30'-6 1/2"
122	2	5	6"	5'-9"	31'-0"	2	5	5'-9"	30'-9"
123	2	5	7"	5'-9 1/2"	31'-3 1/2"	2	5	5'-9 1/2"	30'-11 1/2"
124	2	5	5 1/2"	5'-10 1/4"	31'-5 3/4"	2	5	5'-10 1/4"	31'-3 1/4"
125	2	5	6 1/2"	5'-10 3/4"	31'-9 1/4"	2	5	5'-10 3/4"	31'-5 3/4"
126	2	5	5"	5'-11 1/2"	31' -11 1/2"	2	5	5'-11 1/2"	31'-9 1/2"
127	2	5	6"	6'-0"	32'-3"	2	5	6'-0"	32'-0"
128	2	5	7"	6'-0 1/2"	32'-6 1/2"	2	5	6'-0 1/2"	32'-2 1/2"
129	2	5	5 1/2"	6'-1 1/4"	32'-8 3/4"	2	5	6'-1 1/4"	32'-6 1/4"
130	2	5	6 1/2"	6'-1 3/4"	33'-0 1/4"	2	5	6'-1 3/4"	32'-8 3/4"

NOTES:

1. Camber diagrams to build truss structures with 2 to 4 sections are shown. Cambers shown are for fabrication only and are measured with trusses fully supported at no-load conditions. Allowable camber tolerance for truss is 25% of specific camber value.
2. See Standard Drawing E 805-DMSS-04 for additional notes.

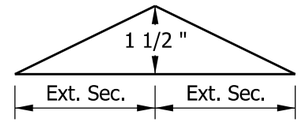

CAMBER DIAGRAM (2-Section Truss)

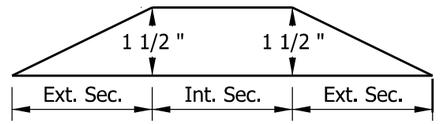

CAMBER DIAGRAM (3-Section Truss)

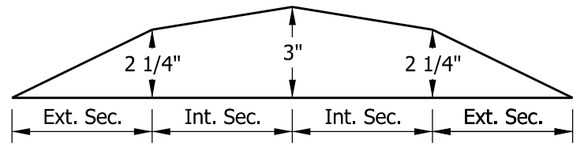

CAMBER DIAGRAM (4-Section Truss)

INDIANA DEPARTMENT OF TRANSPORTATION

DYNAMIC MESSAGE SIGN STRUCTURE
TABLE OF DIMENSIONS
SPANS 82' THRU 130' & CAMBER
SEPTEMBER 2013

STANDARD DRAWING NO. E 802-DMSS-05

ALFREDO B. HANZA
REGISTERED
No.
60020657
STATE OF
INDIANA
PROFESSIONAL ENGINEER

/s/ Alfredo B. Hanza 02/05/13
DESIGN STANDARDS ENGINEER DATE

/s/ Mark A. Miller 03/27/13
CHIEF ENGINEER DATE

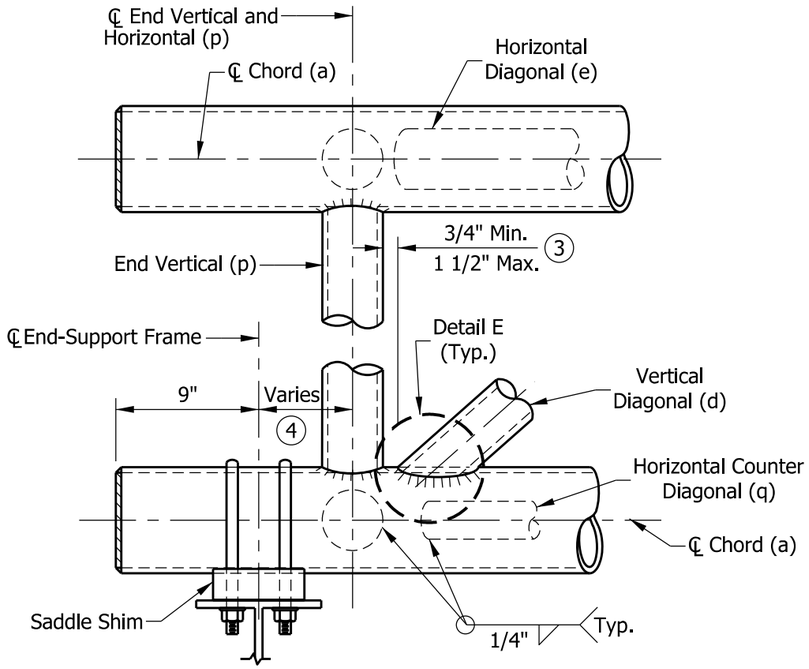

DETAIL A
EXTERIOR SECTION AT END-SUPPORT

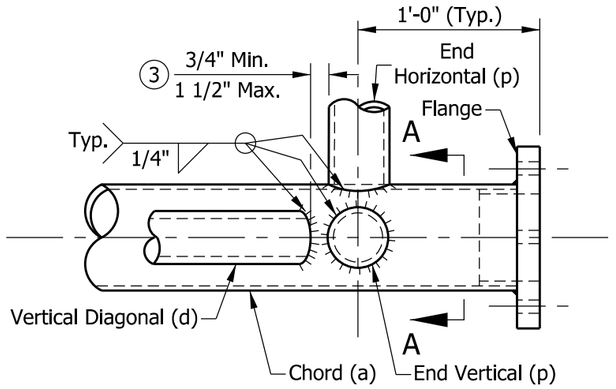

DETAIL C
CHORD AT FLANGE CONNECTION
PLAN VIEW

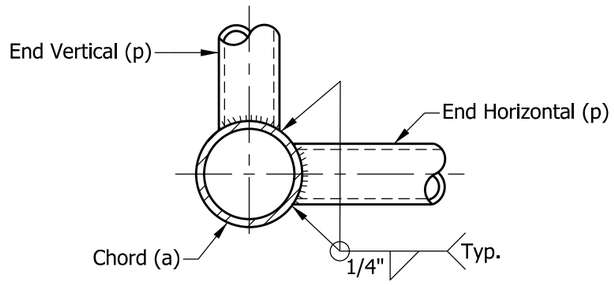

SECTION A-A
TYPICAL JOINT DETAILS

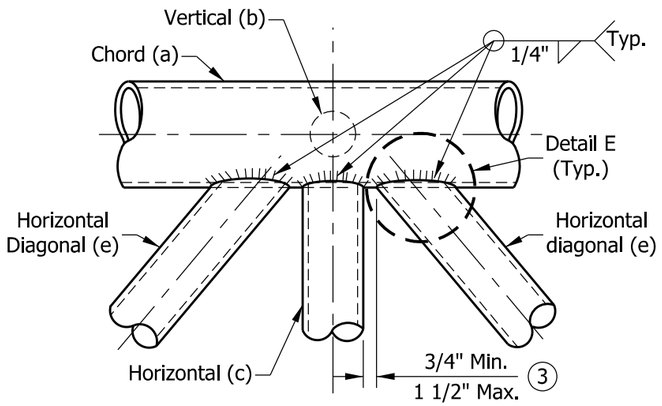

DETAIL B
TYPICAL PANEL CONNECTION
PLAN VIEW

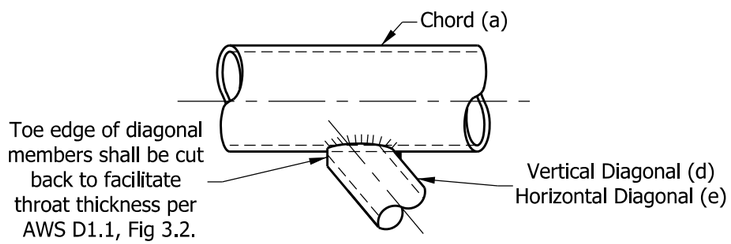

DETAIL E

NOTES:

1. All bracing members shall be machined to provide a snug fit to the chord along the entire edge of bracing members before welding.
2. See Standard Drawing E 802-DMSS-03 for member locations and sizes.

(3) Vertical and horizontal diagonals shall be detailed for minimum offset from the panel point based on the following: offset shall be such as to provide a 3/4" minimum to 1 1/2" maximum clearance between any diagonal and any horizontal or vertical member; and provide clearance for U-bolt connection for signs.

(4) For variable end dimension, Standard Drawings E 802-DMSS-04 and -05.

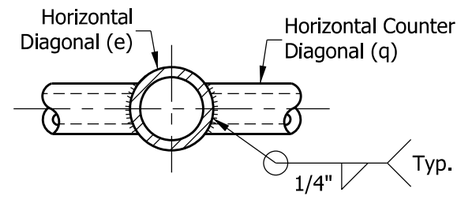

DETAIL D

INDIANA DEPARTMENT OF TRANSPORTATION

DYNAMIC MESSAGE SIGN STRUCTURE
CHORD CONNECTIONS AND WELD DETAILS

SEPTEMBER 2013

STANDARD DRAWING NO. E 802-DMSS-06

ALFREDO B. HANZA
REGISTERED
No. 60020657
STATE OF INDIANA
PROFESSIONAL ENGINEER

/s/ Alfredo B. Hanza 02/05/13
DESIGN STANDARDS ENGINEER DATE

/s/ Mark A. Miller 03/27/13
CHIEF ENGINEER DATE

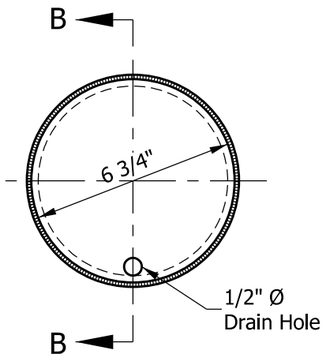

END VIEW

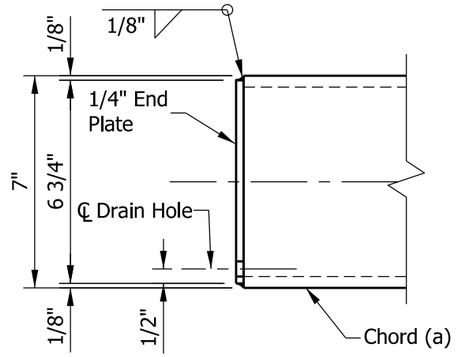

SECTION B-B

CHORD END PLATE DETAILS

NOTE:

1. See Standard Drawing E 802-DMSS-02 for chord flange locations.

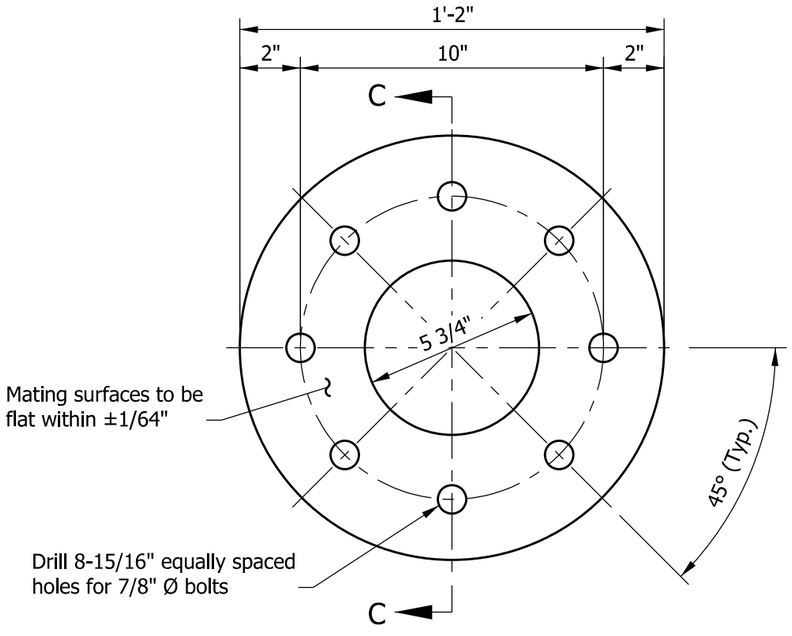

END VIEW

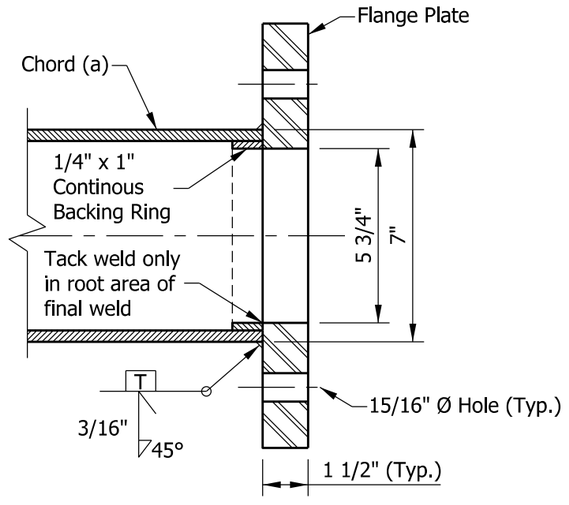

SECTION C-C

FLANGE PLATE DETAILS

INDIANA DEPARTMENT OF TRANSPORTATION

DYNAMIC MESSAGE SIGN STRUCTURE
FLANGE & CHORD END PLATE DETAILS

SEPTEMBER 2013

STANDARD DRAWING NO. E 802-DMSS-07

ALFREDO B. HANZA
REGISTERED
No.
60020657
STATE OF
INDIANA
PROFESSIONAL ENGINEER

/s/ Alfredo B. Hanza 02/05/13
DESIGN STANDARDS ENGINEER DATE

/s/ Mark A. Miller 03/27/13
CHIEF ENGINEER DATE

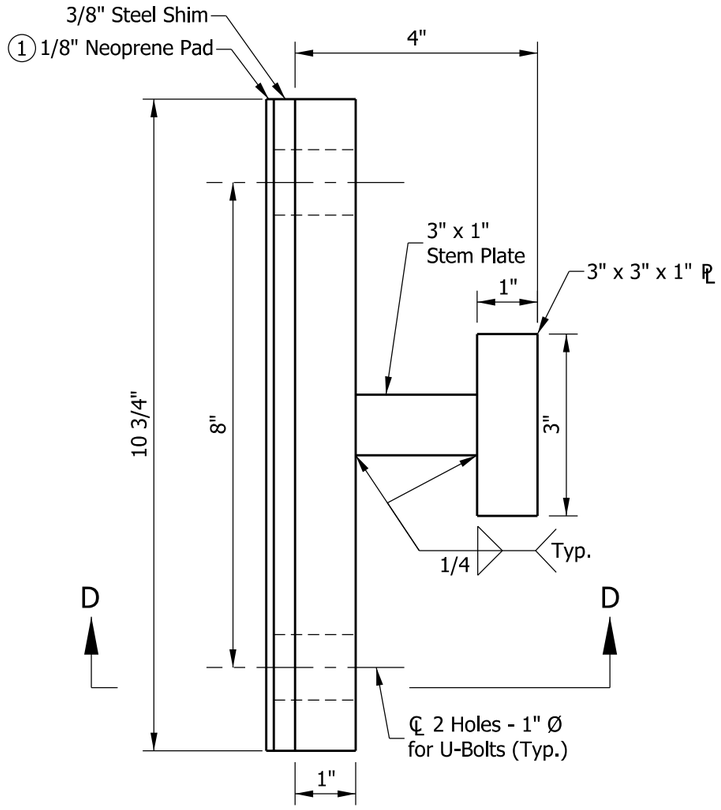

ELEVATION
END-SUPPORT SPACER ASSEMBLY DETAIL

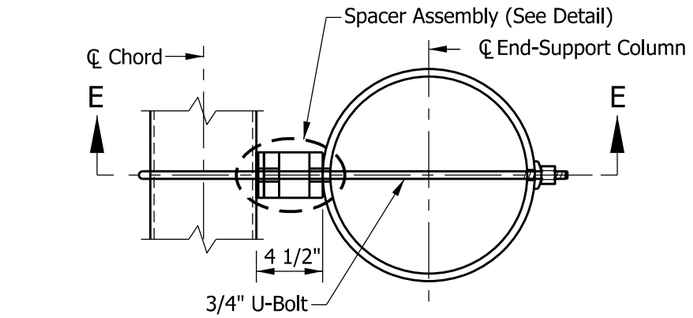

PLAN

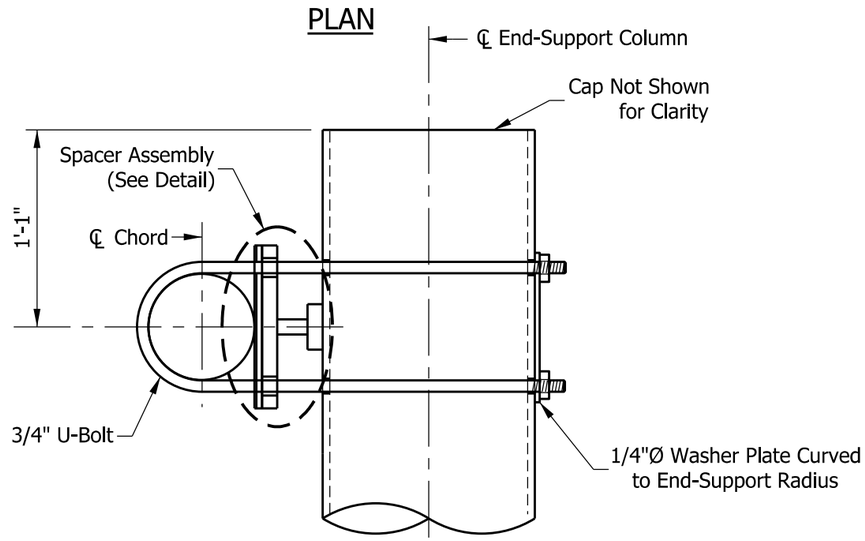

SECTION E-E
UPPER CHORD CONNECTION DETAILS

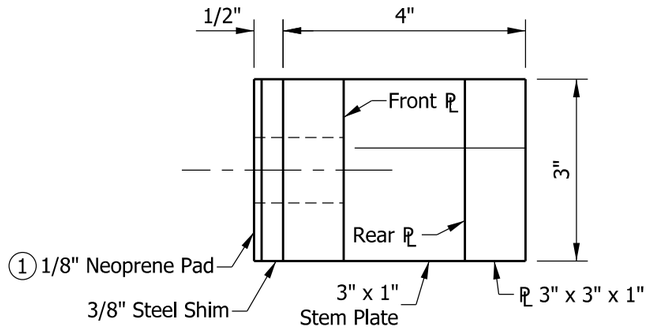

SECTION D-D

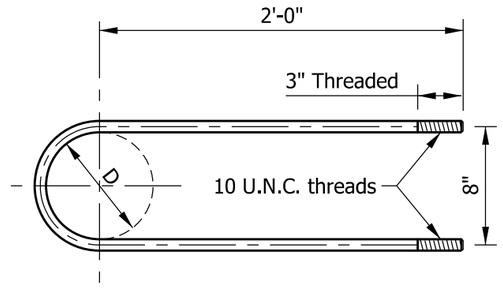

3/4" DIA. STAINLESS STEEL U-BOLT DETAIL

NOTES:

1. Provide isolation from steel-dissimilar metal as required.
2. All spacer assembly material to be steel.

INDIANA DEPARTMENT OF TRANSPORTATION

DYNAMIC MESSAGE SIGN STRUCTURE
END SUPPORT
UPPER CHORD CONNECTION DETAILS
SEPTEMBER 2013

STANDARD DRAWING NO. E 802-DMSS-08

ALFREDO B. HANZA
REGISTERED
No. 60020657
STATE OF INDIANA
PROFESSIONAL ENGINEER

/s/ Alfredo B. Hanza 02/05/13
DESIGN STANDARDS ENGINEER DATE

/s/ Mark A. Miller 03/27/13
CHIEF ENGINEER DATE

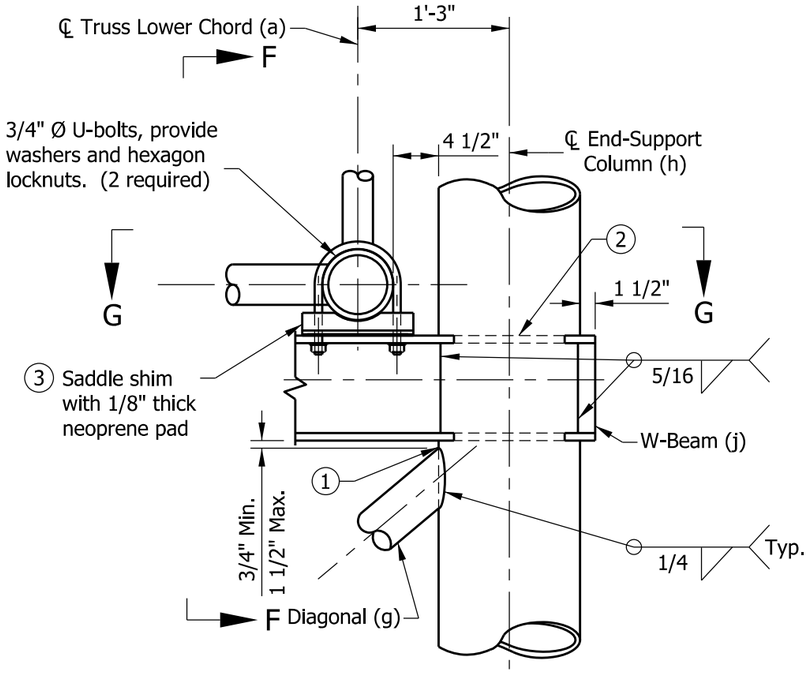

LOWER CHORD CONNECTION DETAIL

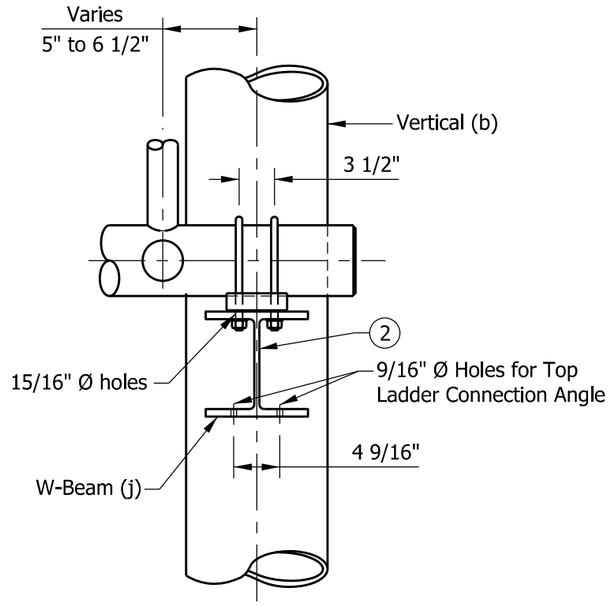

SECTION F-F

NOTES:

1. Toe edge of diagonal member shall be cut back to facilitate throat thickness. See Standard Drawing E 802-DMSS-06 for toe-edge Detail E.
2. Cut holes in end support columns for W-beams to pass through. Holes to have 1/8" maximum clearance to W-beam. Holes in opposite sides of column to be checked for proper alignment prior to cutting.
3. Provide neoprene pads at all chord-to-W-beam bearing surfaces.
4. See Standard Drawing E 802-DMSS-03 for end-support member sizes.

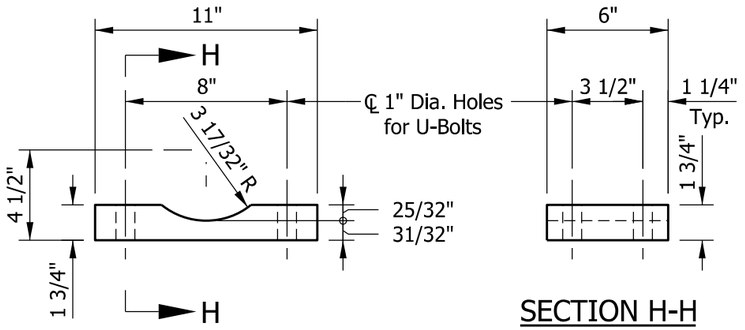

SECTION H-H

SADDLE SHIM DETAIL

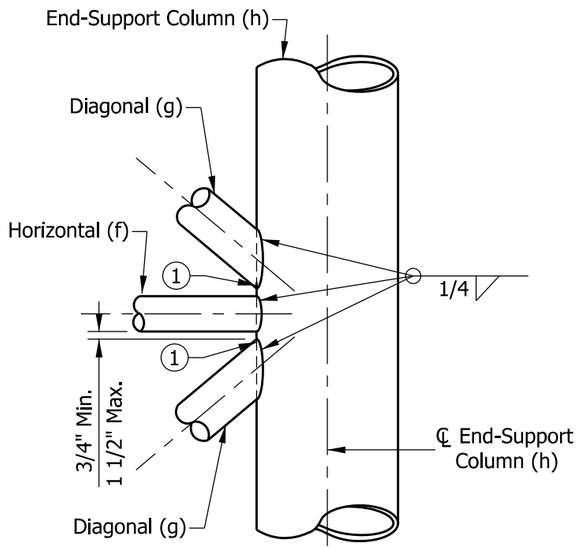

ELEVATION (END SUPPORT)
TYPICAL BRACING MEMBERS CONNECTION

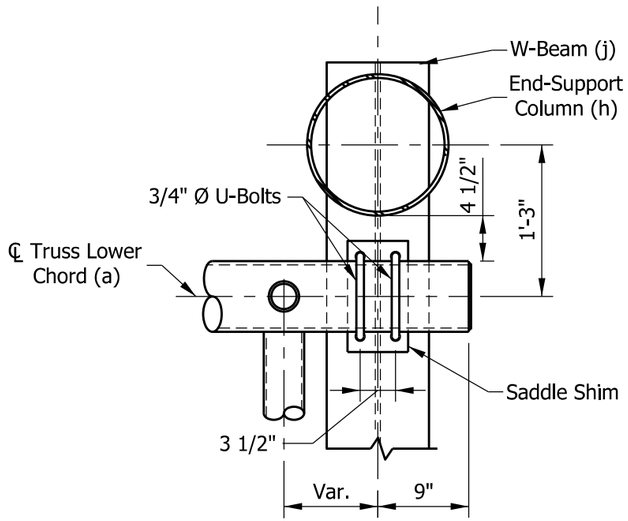

SECTION G-G

INDIANA DEPARTMENT OF TRANSPORTATION

DYNAMIC MESSAGE SIGN STRUCTURE
END-SUPPORT
LOWER CHORD CONNECTION DETAILS
SEPTEMBER 2013

STANDARD DRAWING NO. E 802-DMSS-09

ALFREDO B. HANZA REGISTERED No. 60020657 STATE OF INDIANA PROFESSIONAL ENGINEER

/s/ Alfredo B. Hanza	*02/05/13*
DESIGN STANDARDS ENGINEER	DATE
/s/ Mark A. Miller	*03/27/13*
CHIEF ENGINEER	DATE

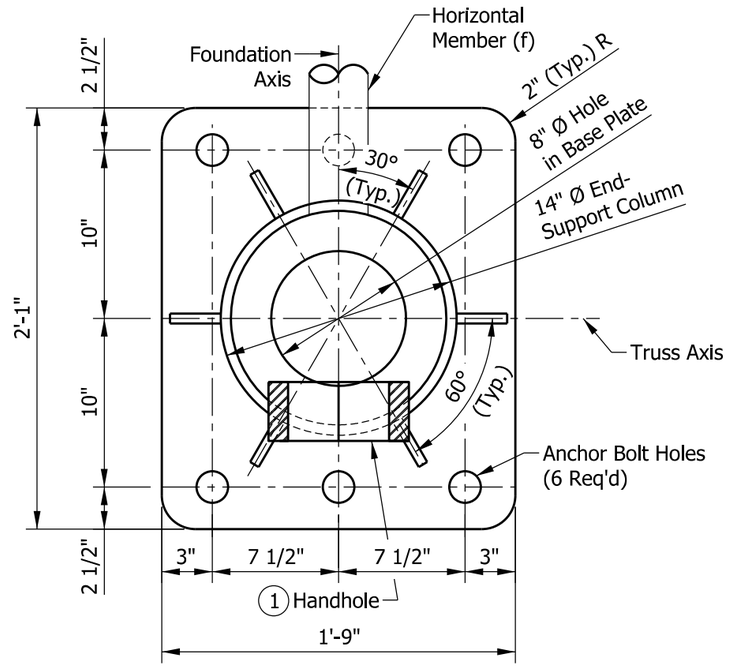

TYPE B-14 BASE PLATE

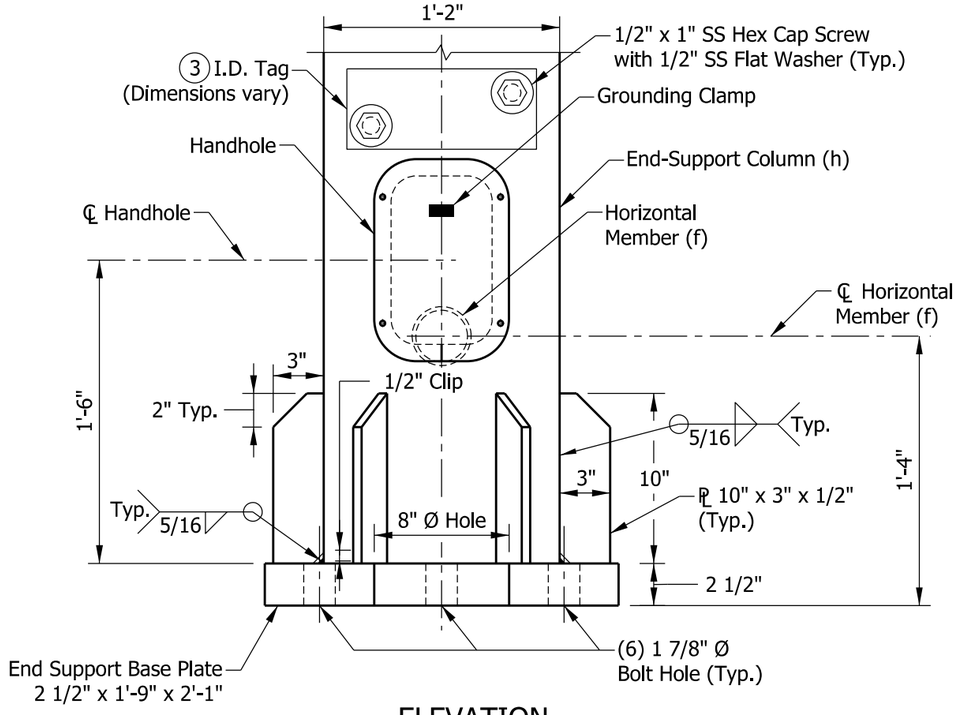

ELEVATION

NOTES:

1. See Standard Drawing E 802-DMSS-11 for handhole details.
2. See Standard Drawing E 802-DMSS-12 for anchor bolts and skirt details.
3. I.D. tag is a 1/8" stainless steel plate with the following information stamped in 1/2" black letters:

   Manufacturer _____, Drawing/Order #_____
   Contract #_____, Structure Type _____
   Fabrication Date _____, Structure Length _____
   End Support Mounting Height _____

4. Each end support requires one I.D. tag.

INDIANA DEPARTMENT OF TRANSPORTATION

DYNAMIC MESSAGE SIGN STRUCTURE
END SUPPORT
BASE PLATE AND I.D. TAG DETAILS
SEPTEMBER 2013

STANDARD DRAWING NO. E 802-DMSS-10

ALFREDO B. HANZA REGISTERED No. 60020657 STATE OF INDIANA PROFESSIONAL ENGINEER

/s/ Alfredo B. Hanza 02/05/13
DESIGN STANDARDS ENGINEER DATE

/s/ Mark A. Miller 03/27/13
CHIEF ENGINEER DATE

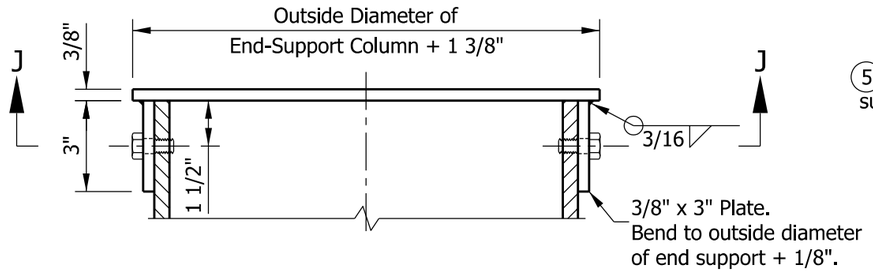

TOP CAP
ELEVATION VIEW

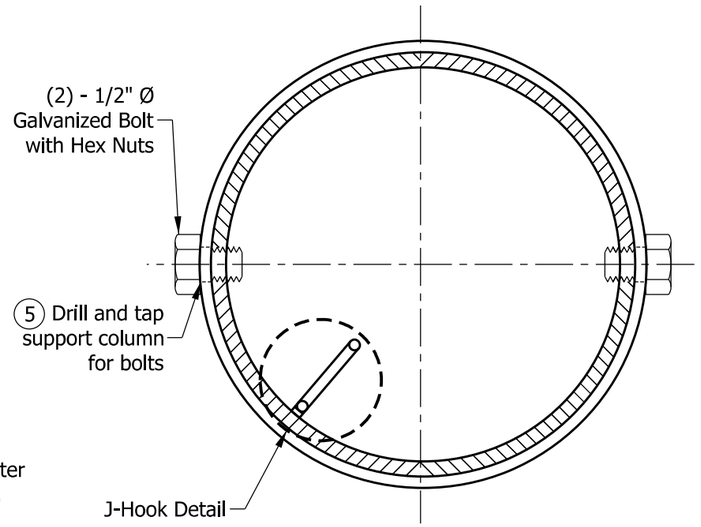

SECTION J-J

NOTES:

1. In lieu of fabricated handhole frame as shown, frame may be cut from 3" plate (rolling direction vertical).
2. See Standard Drawing E 802-SNWR-03 for grounding post details. Grounding post to be placed on far side of support directly opposite center of handhole.
3. See Standard Drawing E 802-DMSS-10 for handhole locations.
4. See Standard Drawing E 802-DMSS-03 for thicknesses of end-support column.
5. Bolts shall be located to miss J-hook.
6. One handhole required on each end support.

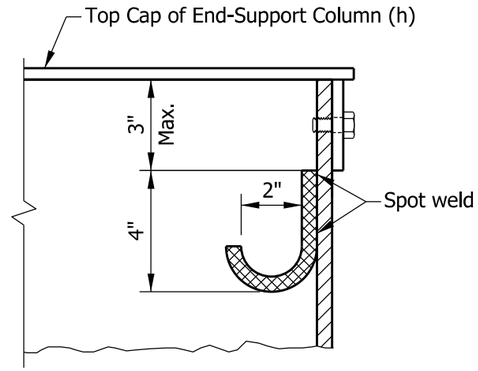

J-HOOK DETAIL

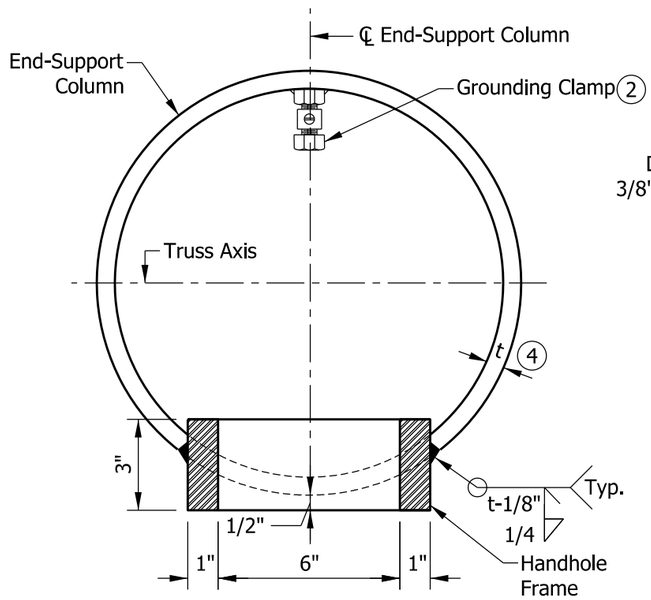

HANDHOLE
SECTION ACROSS COLUMN

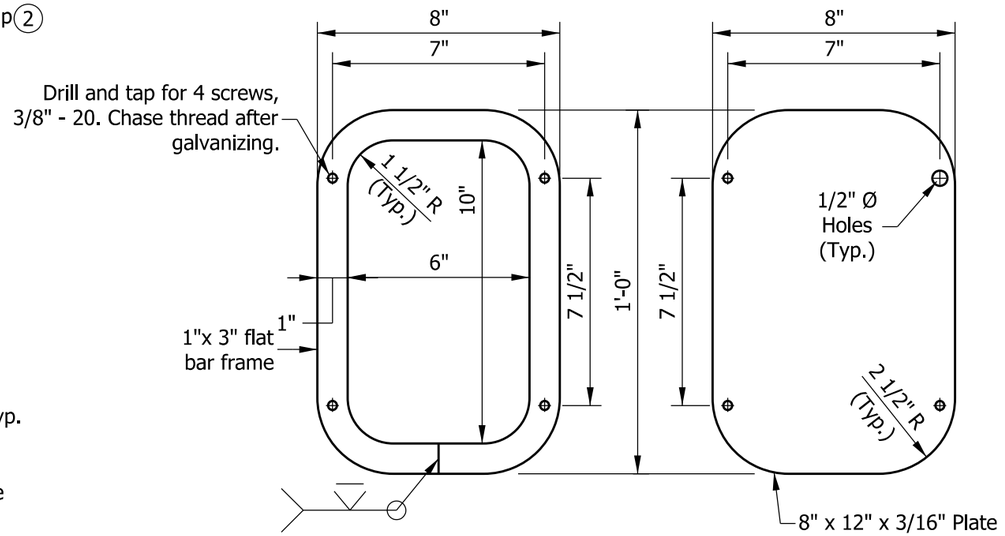

HANDHOLE FRAME DETAIL

HANDHOLE COVER

INDIANA DEPARTMENT OF TRANSPORTATION	
DYNAMIC MESSAGE SIGN STRUCTURE END SUPPORT HANDHOLE, TOP CAP, AND J-HOOK DETAILS SEPTEMBER 2013	
STANDARD DRAWING NO. E 802-DMSS-11	
ALFREDO B. HANZA REGISTERED No. 60020657 STATE OF INDIANA PROFESSIONAL ENGINEER	/s/ Alfredo B. Hanza 02/05/13 DESIGN STANDARDS ENGINEER DATE
	/s/ Mark A. Miller 03/27/13 CHIEF ENGINEER DATE

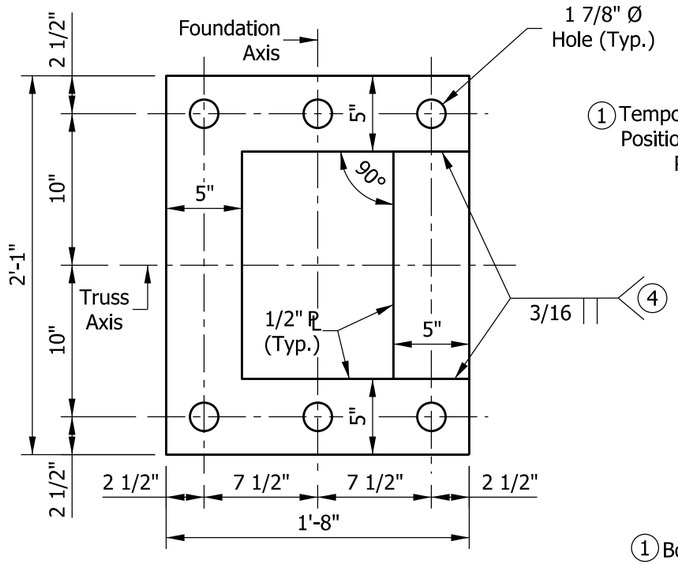

TEMPORARY POSITIONING PLATE

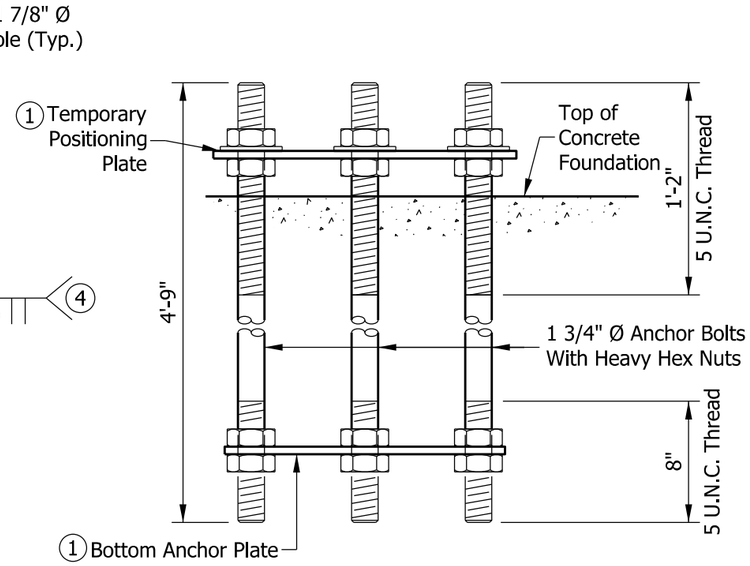

ANCHOR BOLT DETAILS
BEFORE CONCRETE PLACEMENT

NOTES:

1. Use temporary positioning plate and bottom anchor plate for all foundations. Temporary positioning plate should be removed after placing concrete.
2. Secure galvanized metal skirt to base plate after erection as shown in skirt detail.
3. Minimum base plate gap is 2 1/2" and can be increased up to 5 1/2". Metal skirt width shall be at least 1 1/2" more than the actual gap.
4. Contractor has the option to use four separate bars. Weld to maintain angles and shapes as shown.
5. For base plate of end-support, see Standard Drawing E 802-DMSS-10.

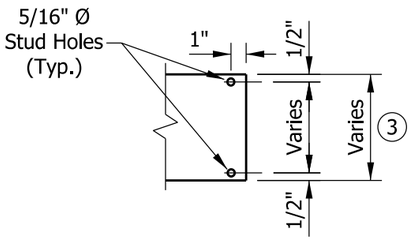

DETAIL G

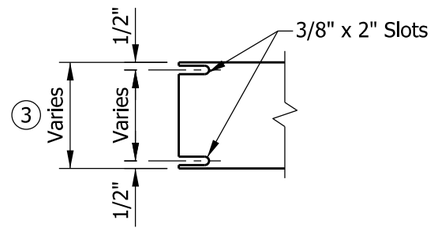

DETAIL H

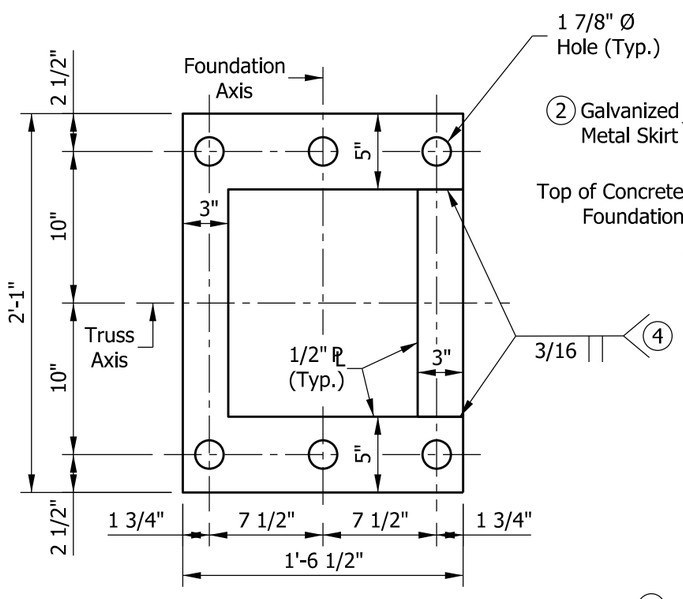

BOTTOM ANCHOR PLATE

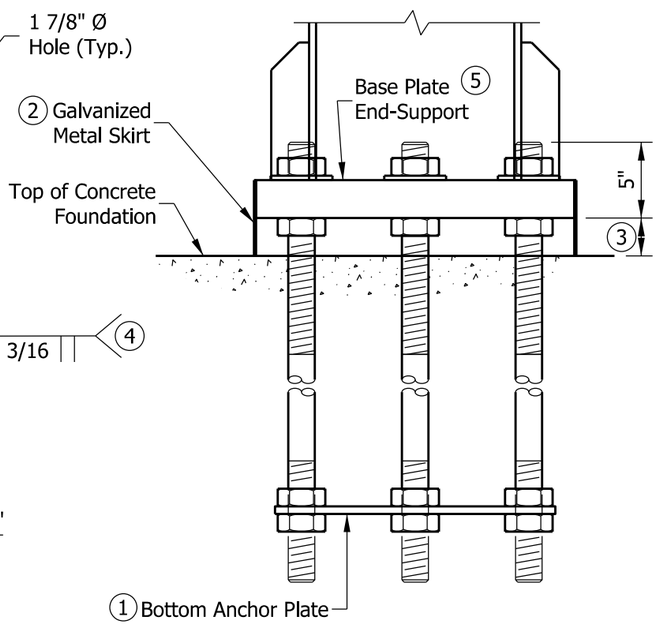

ANCHOR BOLT DETAILS
AFTER CONCRETE PLACEMENT

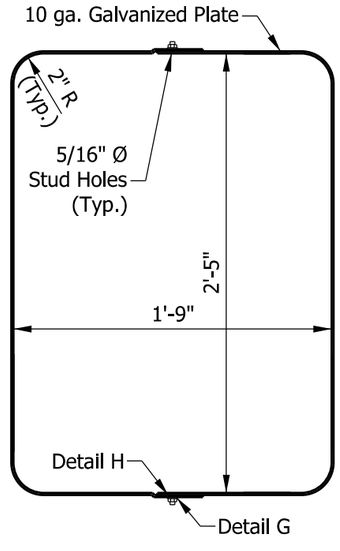

METAL SKIRT DETAIL

INDIANA DEPARTMENT OF TRANSPORTATION

DYNAMIC MESSAGE SIGN STRUCTURE
ANCHOR PLATES, ANCHOR BOLTS,
AND METAL SKIRT DETAILS

SEPTEMBER 2013

STANDARD DRAWING NO. E 802-DMSS-12

ALFREDO B. HANZA
REGISTERED
No. 60020657
STATE OF INDIANA
PROFESSIONAL ENGINEER

/s/ Alfredo B. Hanza — 02/05/13
DESIGN STANDARDS ENGINEER — DATE

/s/ Mark A. Miller — 03/27/13
CHIEF ENGINEER — DATE

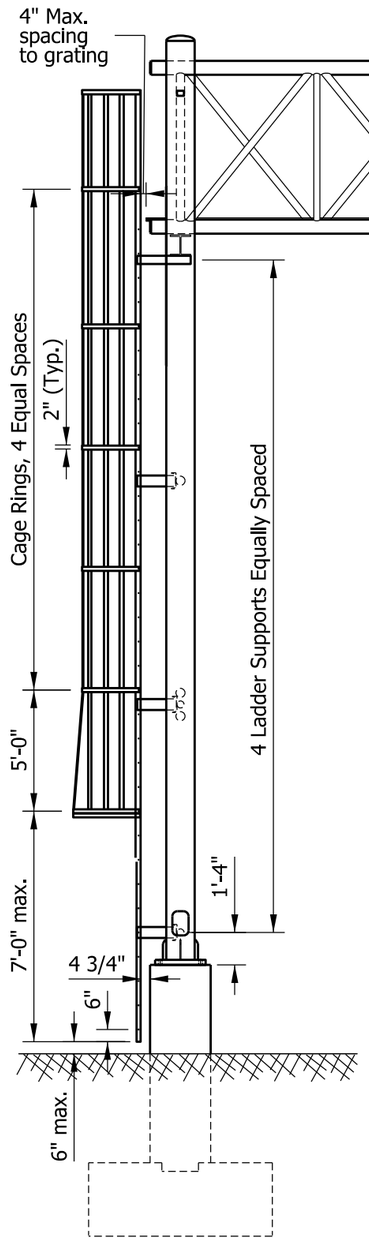

SIDE VIEW

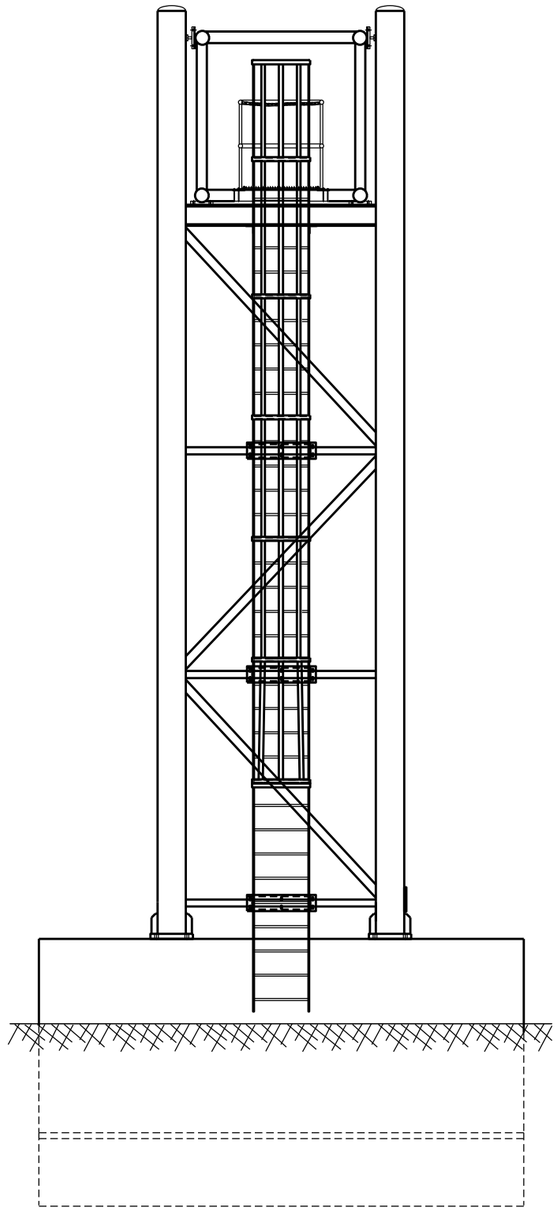

FRONT VIEW OF
LADDER AND CAGE

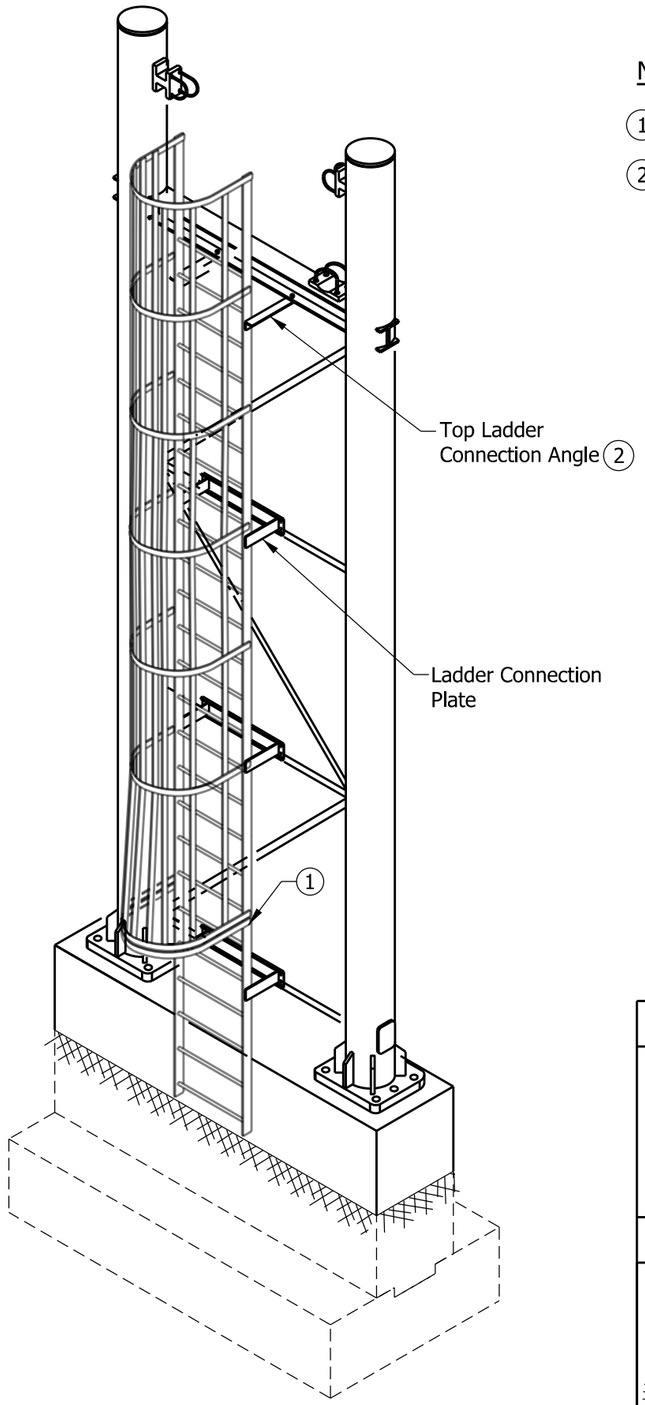

NOTES:

(1) See Standard Drawing E 802-DMSS-15 for security gate details.

(2) See Standard Drawing E 802-DMSS-14 for ladder details.

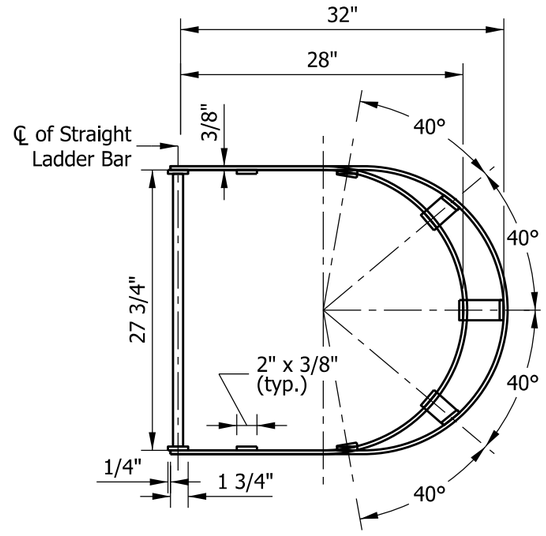

TOP VIEW OF
LADDER AND CAGE

INDIANA DEPARTMENT OF TRANSPORTATION

DYNAMIC MESSAGE SIGN STRUCTURE
LADDER DETAILS

SEPTEMBER 2013

STANDARD DRAWING NO. E 802-DMSS-13

ALFREDO B. HANZA
REGISTERED
No.
60020657
STATE OF
INDIANA
PROFESSIONAL ENGINEER

/s/ Alfredo B. Hanza 02/05/13
DESIGN STANDARDS ENGINEER DATE

/s/ Mark A. Miller 03/27/13
CHIEF ENGINEER DATE

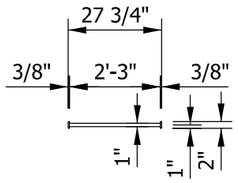

TOP VIEW OF LADDER

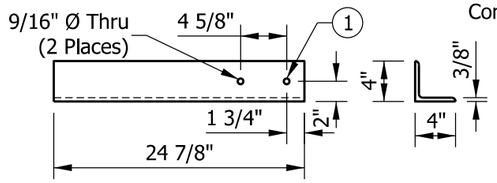

TOP LADDER CONNECTION ANGLE

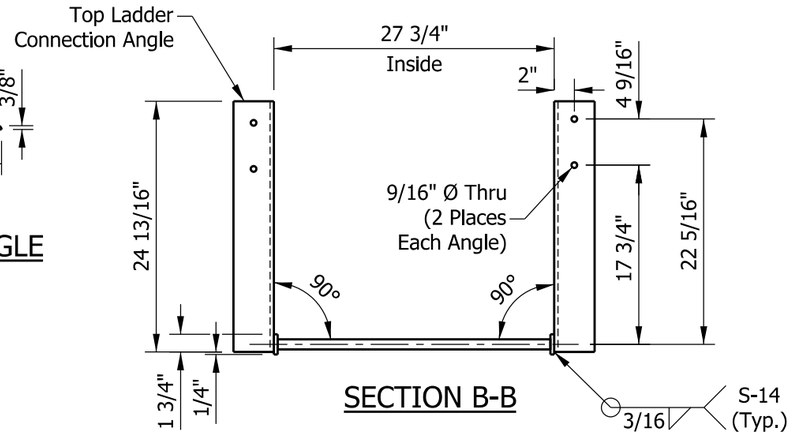

SECTION B-B

NOTE:

1 (1) A-325 bolts 1/2" x 2" on each side of the W-beam with (1) flat washer and (1) lock nut.

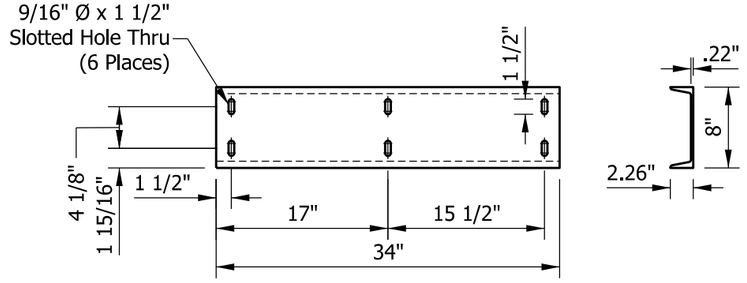

LADDER CONNECTION CHANNEL

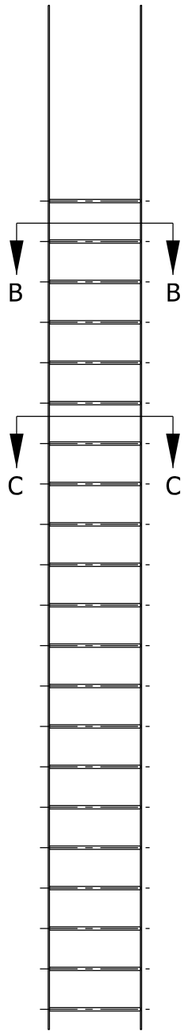

FRONT VIEW OF LADDER

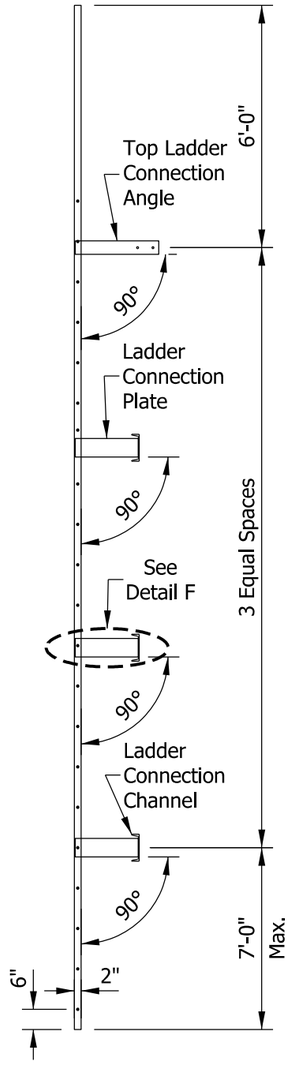

SIDE VIEW OF LADDER AND CAGE

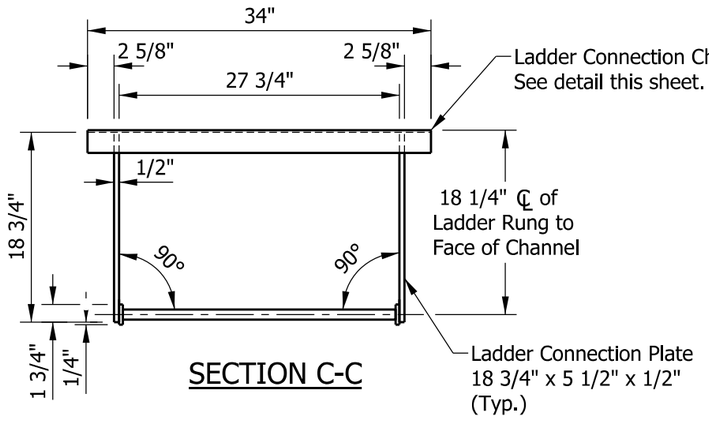

SECTION C-C

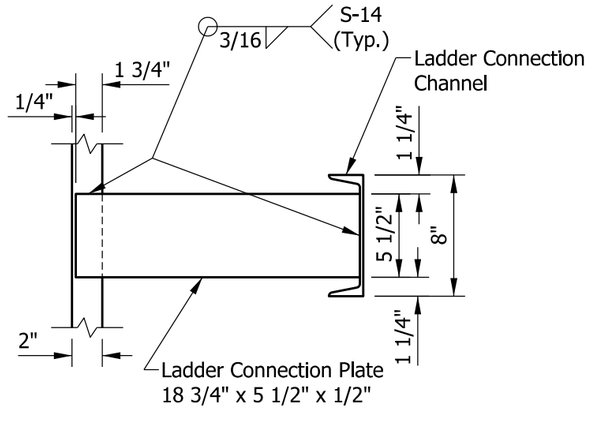

DETAIL F

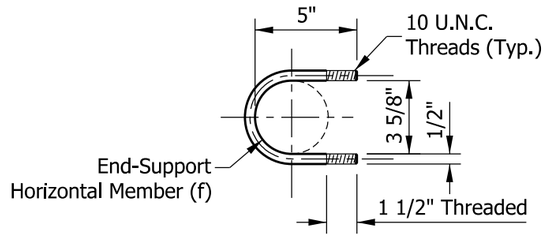

1/2" DIA. STAINLESS STEEL U-BOLT DETAIL
(Used for ladder connection channel)

INDIANA DEPARTMENT OF TRANSPORTATION

DYNAMIC MESSAGE SIGN STRUCTURE
LADDER DETAILS

SEPTEMBER 2013

STANDARD DRAWING NO. E 802-DMSS-14

ALFREDO B. HANZA
REGISTERED
No. 60020657
STATE OF INDIANA
PROFESSIONAL ENGINEER

/s/ Alfredo B. Hanza 02/05/13
DESIGN STANDARDS ENGINEER DATE

/s/ Mark A. Miller 03/27/13
CHIEF ENGINEER DATE

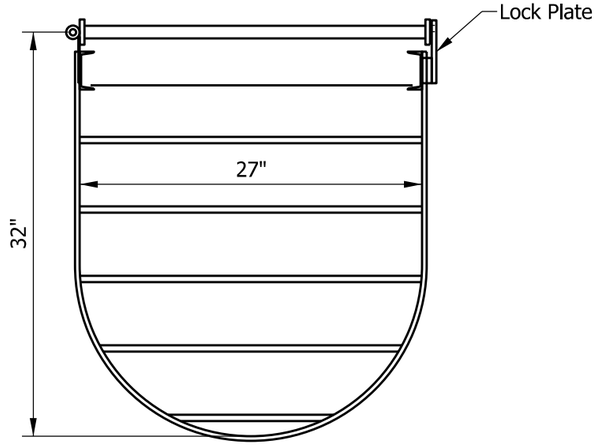

TOP

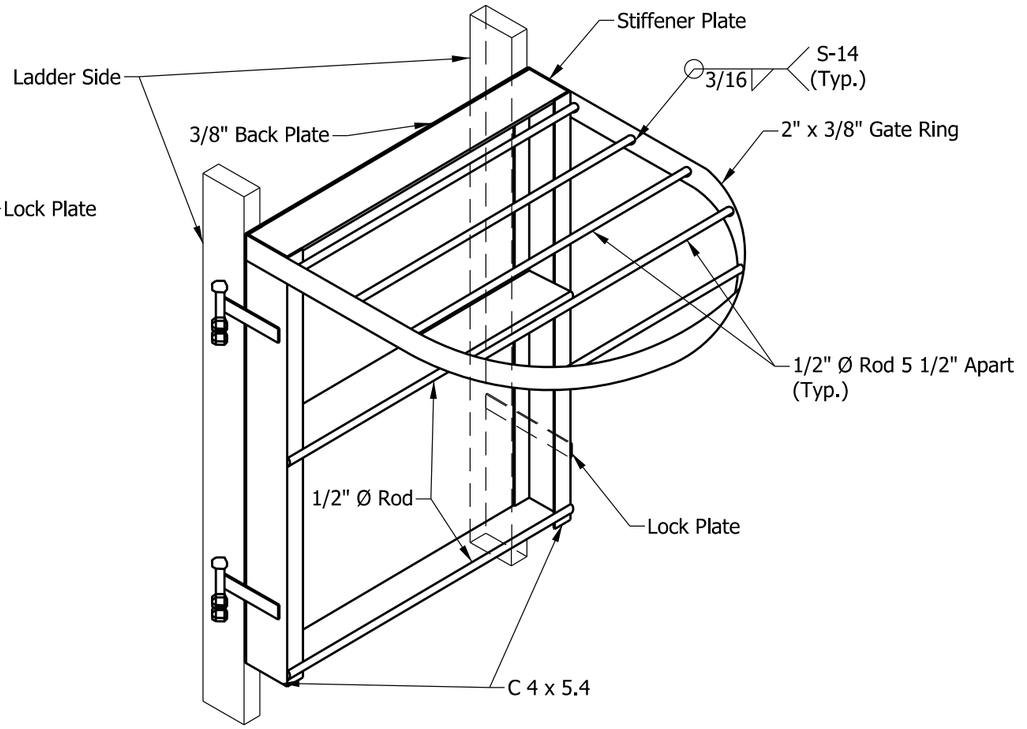

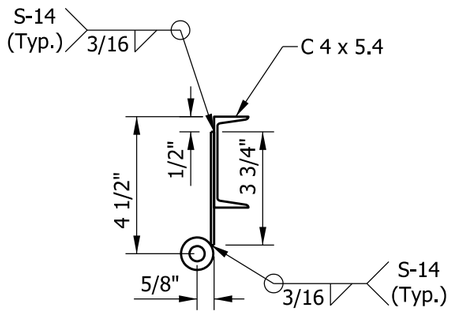

HINGE

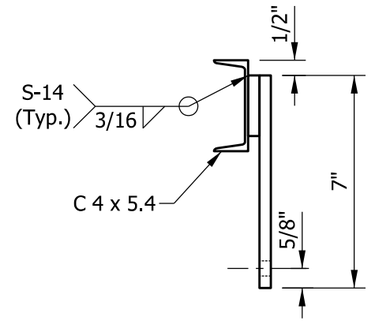

GATE LOCK

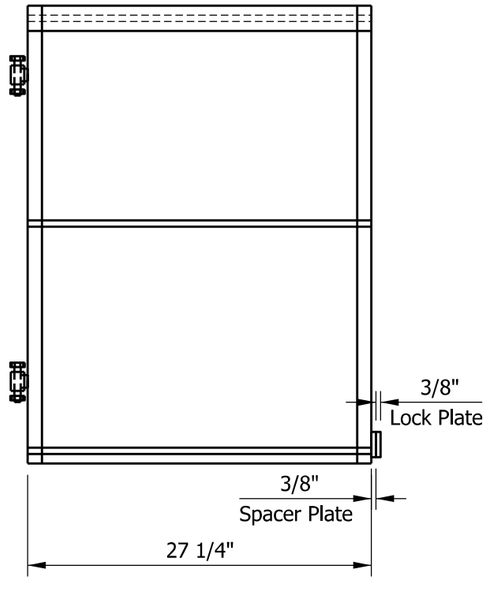

FRONT

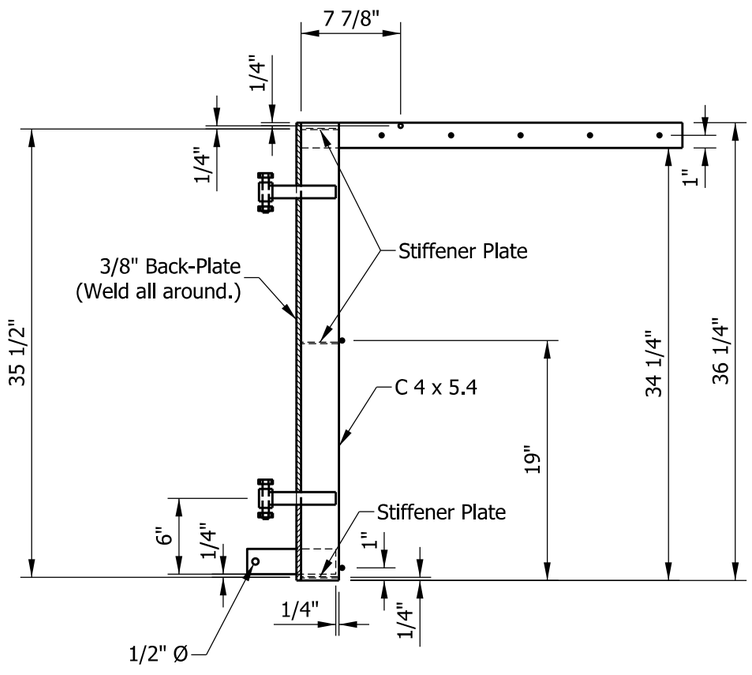

SIDE

INDIANA DEPARTMENT OF TRANSPORTATION

DYNAMIC MESSAGE SIGN STRUCTURE
SECURITY GATE DETAILS

SEPTEMBER 2013

STANDARD DRAWING NO. E 802-DMSS-15

ALFREDO B. HANZA
REGISTERED
No.
60020657
STATE OF
INDIANA
PROFESSIONAL ENGINEER

/s/ Alfredo B. Hanza 02/05/13
DESIGN STANDARDS ENGINEER DATE

/s/ Mark A. Miller 03/27/13
CHIEF ENGINEER DATE

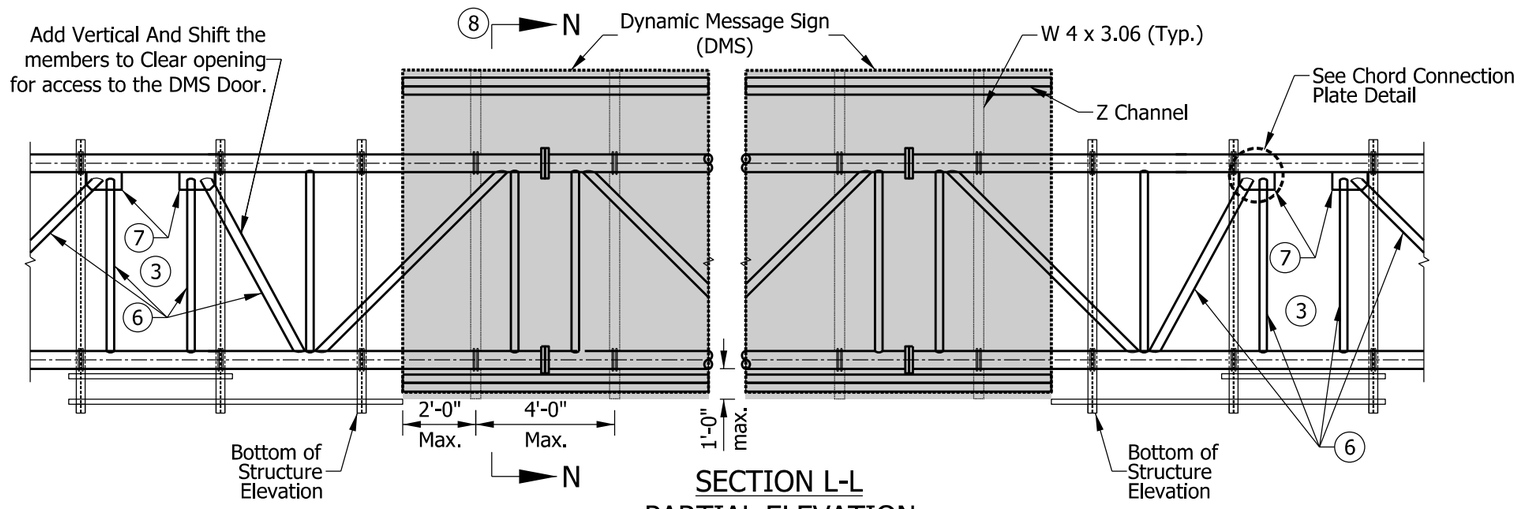

SECTION L-L
PARTIAL ELEVATION
(Handrail omitted for clarity)

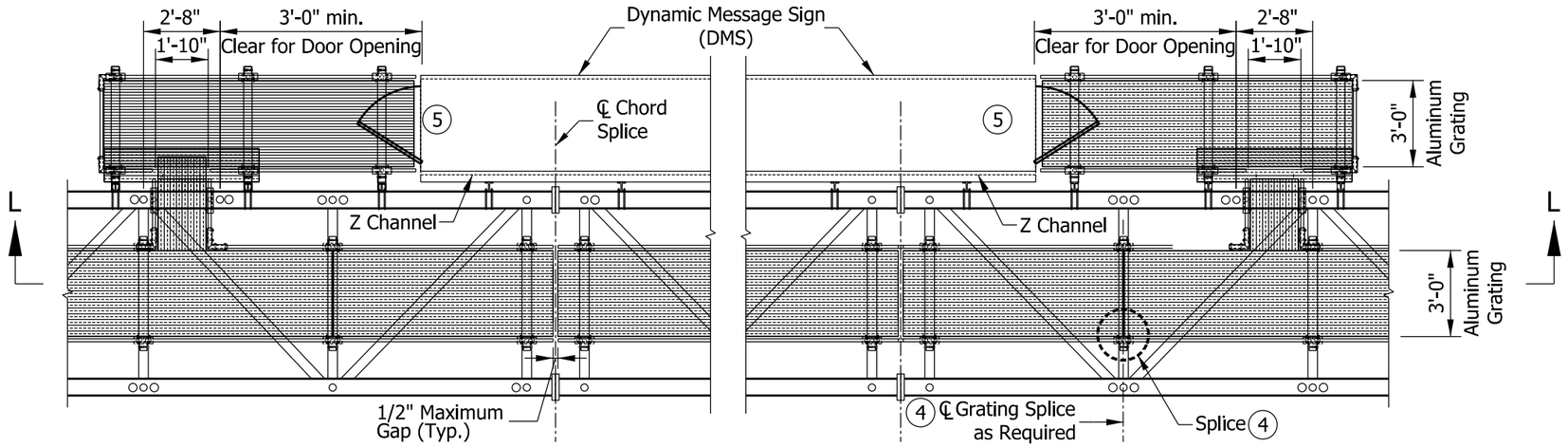

WALKWAY GRATING PLAN

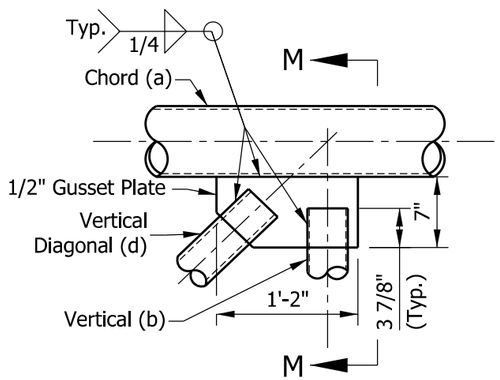

CHORD CONNECTION PLATE DETAIL

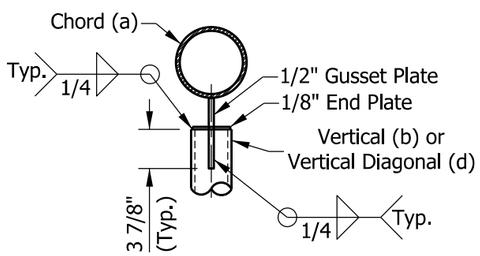

SECTION M-M

NOTES:

1. Interior walkway gratings are extruded I-bars 2" x 1/4" at 1 3/16" center-to-center. Crossbar shall have a maximum gap of 4". Moment of inertia I_x = 1.382 in^4. A different grating of equal strength may be used upon approval.
2. Interior walkway grating shall run the full length center to center of end support truss members plus 9" at each end.

(3) The contractor shall coordinate with the fabricator to determine which truss panel is to be modified to allow opening for access to the DMS door.

(4) Interior walkway gratings can be spliced on center of any horizontal truss members as needed. See Standard Drawing E 802-DMSS-18 for typical grating splice detail.

(5) The contractor shall coordinate with sign manufacturer so floor inside DMS is one comfortable step to the exterior grating.

(6) Truss vertical and diagonal members on each side of the DMS access door shall be aluminum with 4.0" diameter and a minimum wall thickness of 0.500".

(7) Install gusset plates at vertical and diagonal intersection on each side of the opening for access to DMS door.

(8) See Standard Drawing E 802-DMSS-17 for Section N-N.

INDIANA DEPARTMENT OF TRANSPORTATION

DYNAMIC MESSAGE SIGN STRUCTURE
WALKWAY GRATING DETAILS

SEPTEMBER 2013

STANDARD DRAWING NO. E 802-DMSS-16

ALFREDO B. HANZA REGISTERED No. 60020657 STATE OF INDIANA PROFESSIONAL ENGINEER

/s/ Alfredo B. Hanza 02/05/13
DESIGN STANDARDS ENGINEER DATE

/s/ Mark A. Miller 03/27/13
CHIEF ENGINEER DATE

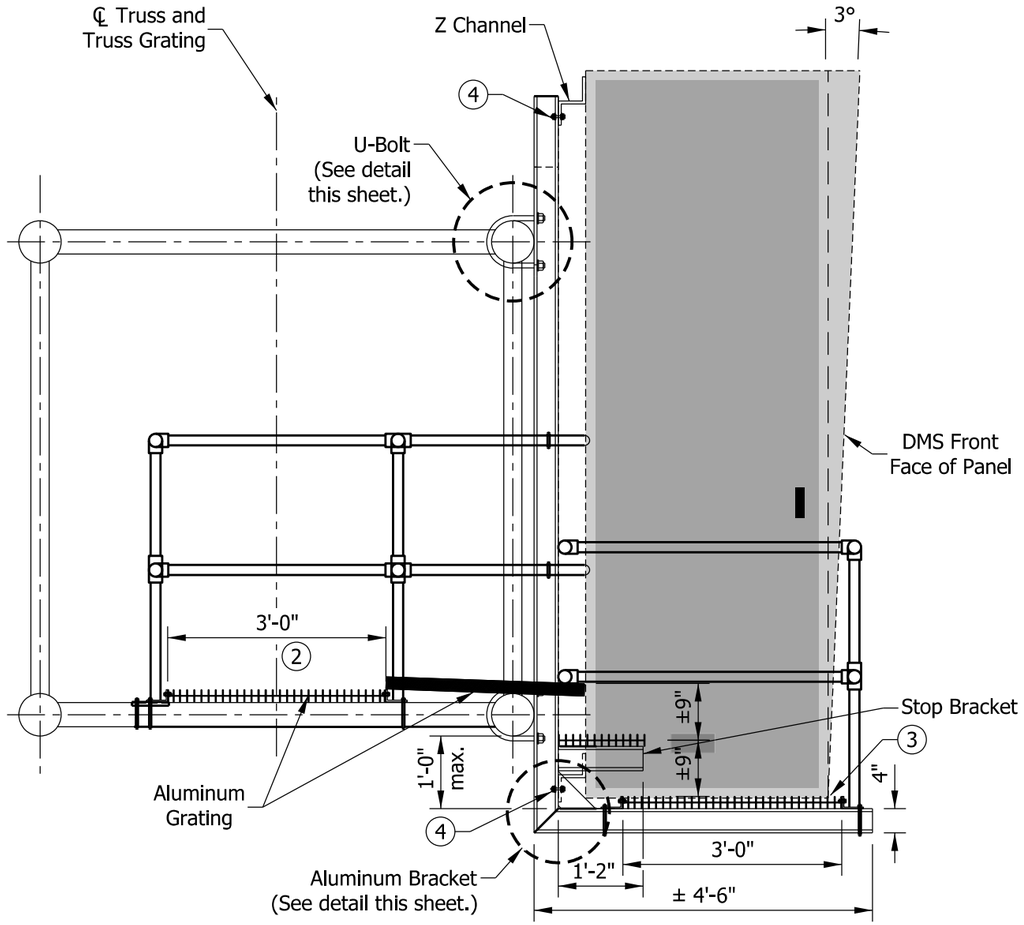

SECTION N-N

NOTES:

1. The front face of the DMS shall be tilted at 3° toward approaching traffic. If the DMS is not built with the front face tilted appropriately, a block shall be placed on the top of the back face to obtain the 3° tilt.
2. The walkway grating width is nominal and may vary ±1/2" based on available standard widths.
3. The bottom of the DMS door shall open without obstruction from the grating.
4. (1) A-325 bolt 1/2" x 2" on each side of the WF (A-N) 4 x 3.06 aluminum bracket web with (1) flat washer and (1) lock nut.
5. (2) flat washers, (2) lock washers, and (2) lock nuts per U-bolt; 4 required per bracket.

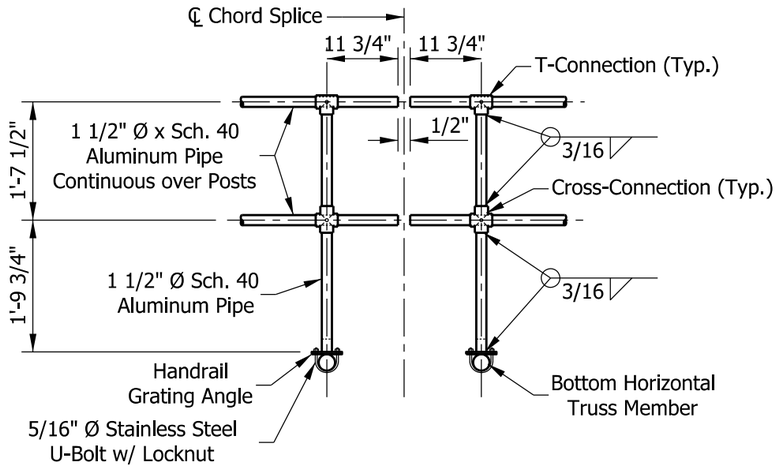

TYPICAL HANDRAIL DETAIL

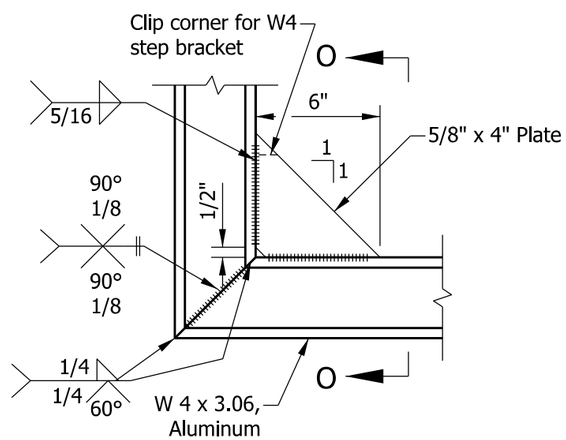

ALUMINUM BRACKET DETAIL

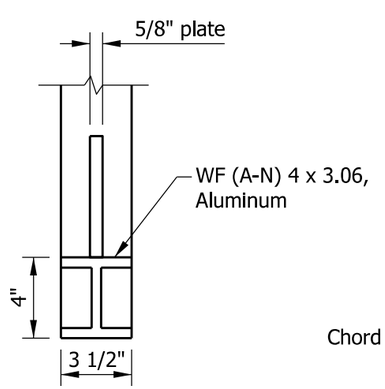

SECTION O-O

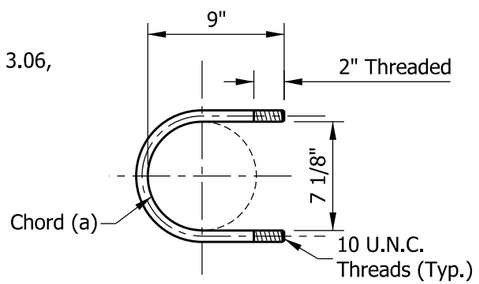

1/2" DIA. STAINLESS STEEL U-BOLT DETAIL

INDIANA DEPARTMENT OF TRANSPORTATION

DYNAMIC MESSAGE SIGN STRUCTURE
WALKWAY GRATING DETAILS

SEPTEMBER 2013

STANDARD DRAWING NO. E 802-DMSS-17

ALFREDO B. HANZA
REGISTERED
No. 60020657
STATE OF INDIANA
PROFESSIONAL ENGINEER

/s/ Alfredo B. Hanza — 02/05/13
DESIGN STANDARDS ENGINEER — DATE

/s/ Mark A. Miller — 03/27/13
CHIEF ENGINEER — DATE

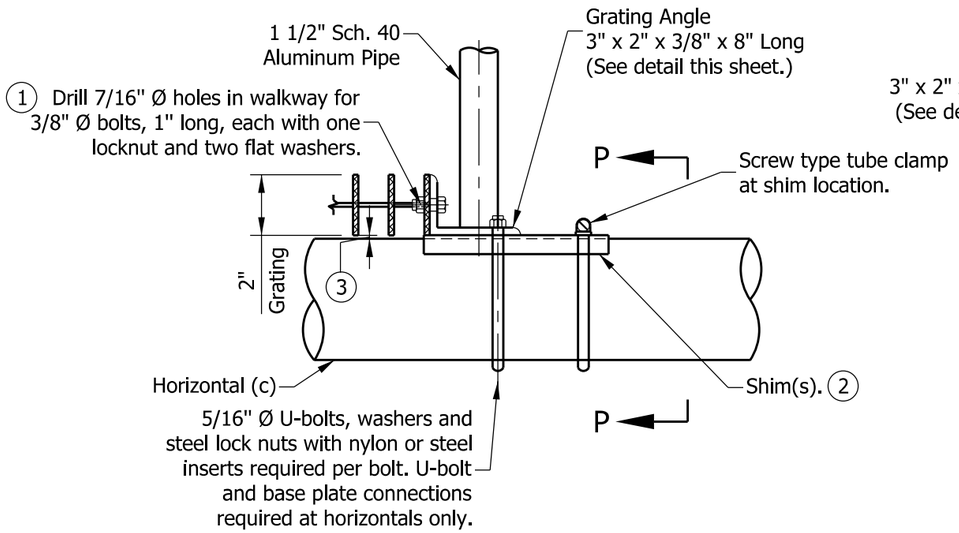

GRATING SUPPORT DETAIL

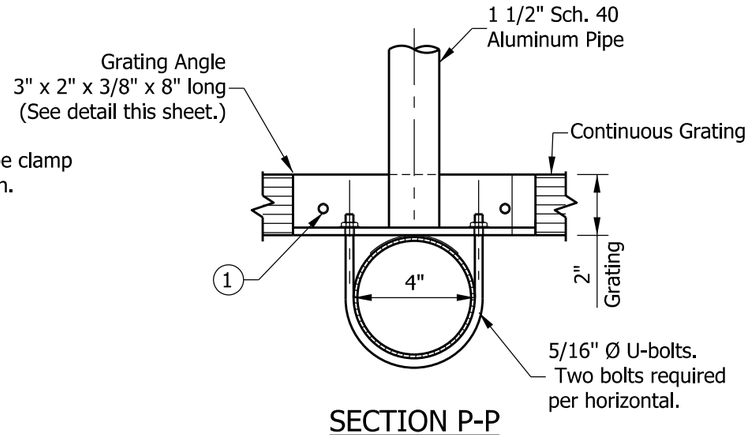

SECTION P-P

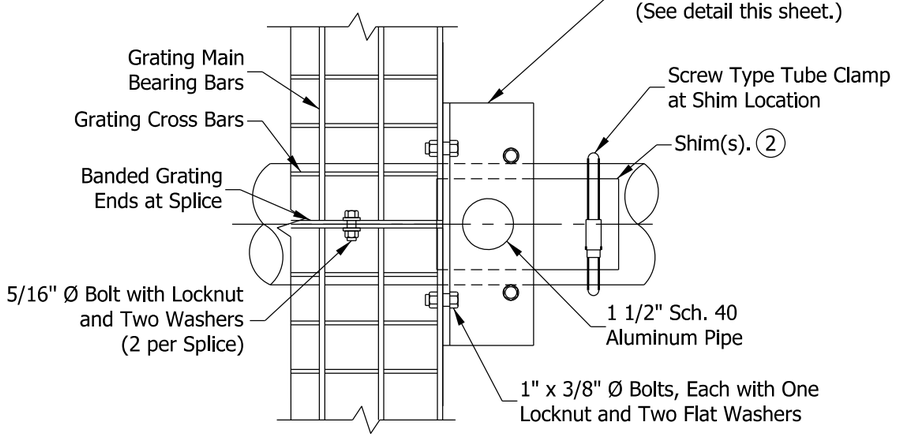

GRATING SPLICE DETAIL

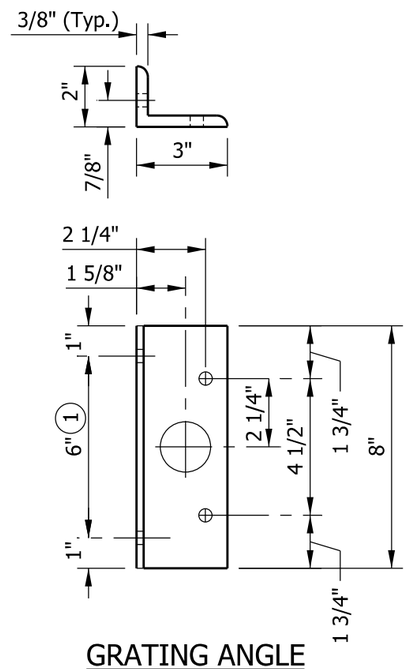

GRATING ANGLE

NOTES:

1. Drilling of holes in grating may be done in shop or field, based on Contractor's preference and subject to accurate alignment.
2. Shims may be placed as shown if needed to compensate for alignment variations between horizontal and diagonal pipes beyond adjustment provided by angles. Thicker shims may be used subject to shims performing properly.
3. Tube-to-grating gap may vary from 0" to 1/2" max. to align walkway and to allow for camber.

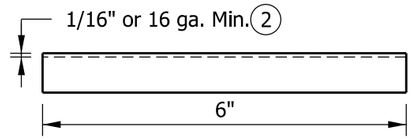

ELEVATION

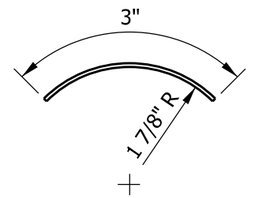

END VIEW

SHIM DETAIL

INDIANA DEPARTMENT OF TRANSPORTATION

DYNAMIC MESSAGE SIGN STRUCTURE
WALKWAY GRATING DETAILS

SEPTEMBER 2013

STANDARD DRAWING NO. E 802-DMSS-18

ALFREDO B. HANZA
REGISTERED
No. 60020657
STATE OF INDIANA
PROFESSIONAL ENGINEER

/s/ Alfredo B. Hanza 02/05/13
DESIGN STANDARDS ENGINEER DATE

/s/ Mark A. Miller 03/27/13
CHIEF ENGINEER DATE

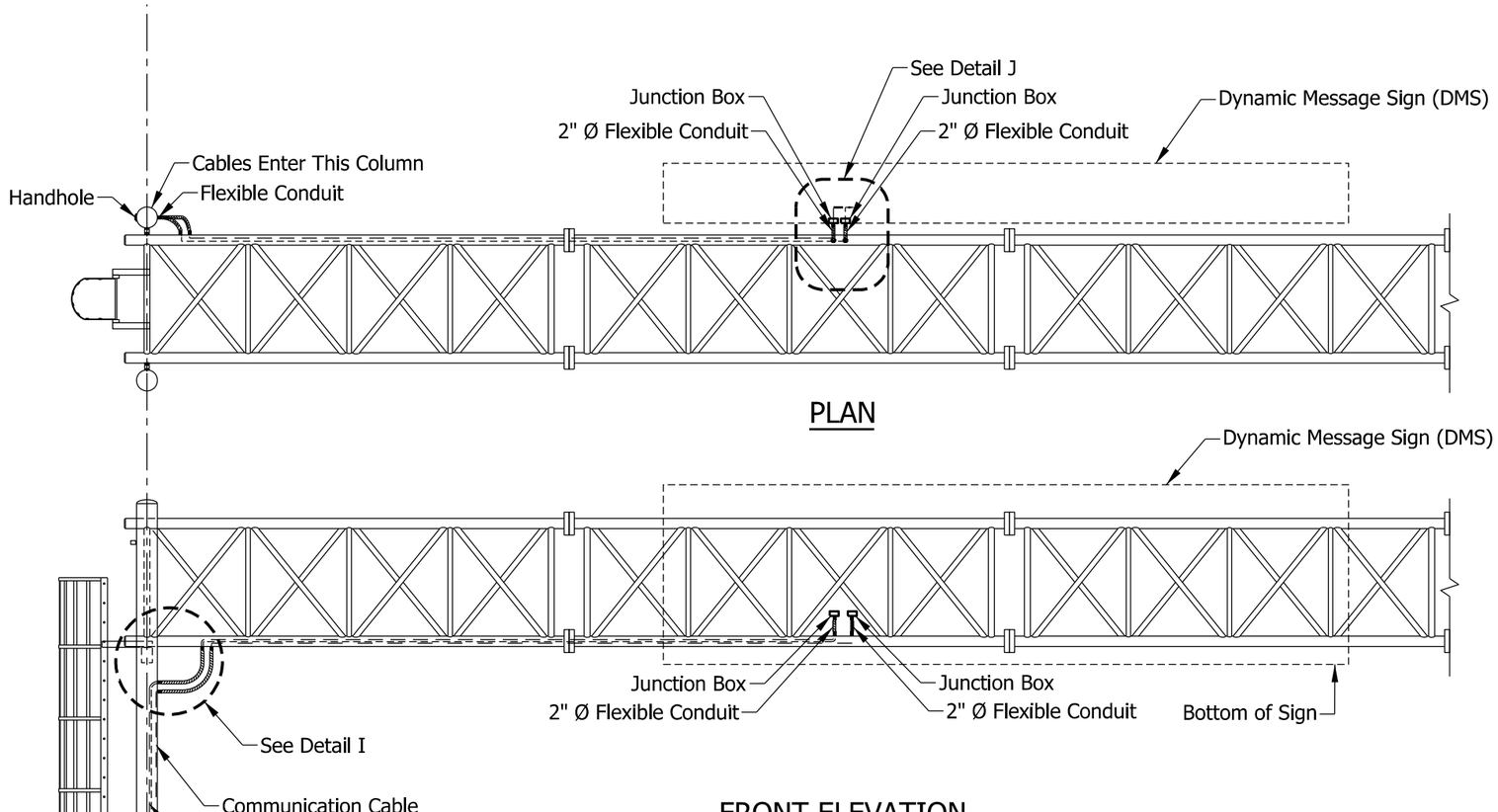

PLAN

FRONT ELEVATION

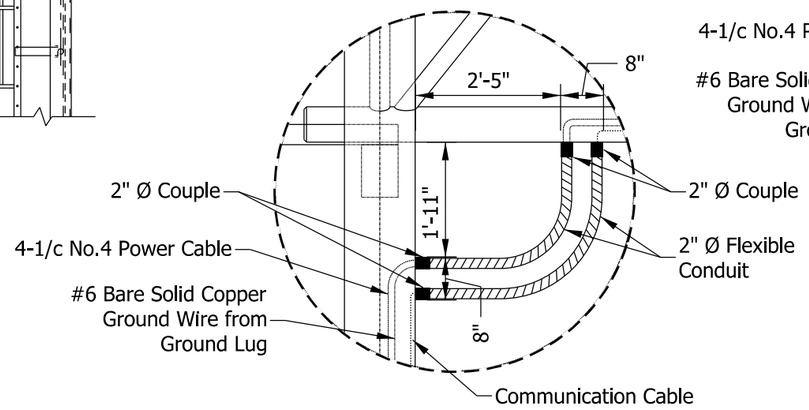

DETAIL I

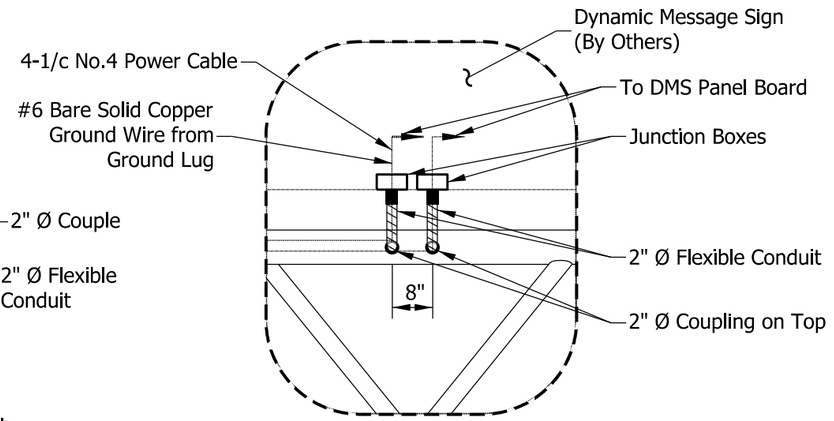

DETAIL J

NOTES:

1. Cables shall be laid out as shown or as otherwise directed.
2. It is the Contractor's responsibility to coordinate locations of cable access with manufacturers.
3. Wire outlets shall be composed of aluminum on the chord and steel on the end support and shall have threaded-insert plug.

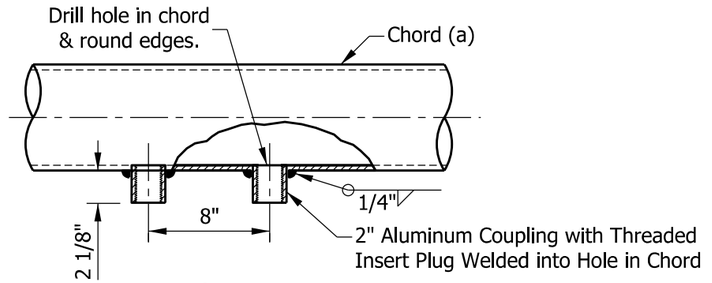

WIRE OUTLET DETAIL
PLAN VIEW

INDIANA DEPARTMENT OF TRANSPORTATION

DYNAMIC MESSAGE SIGN STRUCTURE
WIRING LAYOUT DETAILS

SEPTEMBER 2013

STANDARD DRAWING NO. E 802-DMSS-19

ALFREDO B. HANZA
REGISTERED
No.
60020657
STATE OF
INDIANA
PROFESSIONAL ENGINEER

/s/ Alfredo B. Hanza 02/05/13
DESIGN STANDARDS ENGINEER DATE

/s/ Mark A. Miller 03/27/13
CHIEF ENGINEER DATE

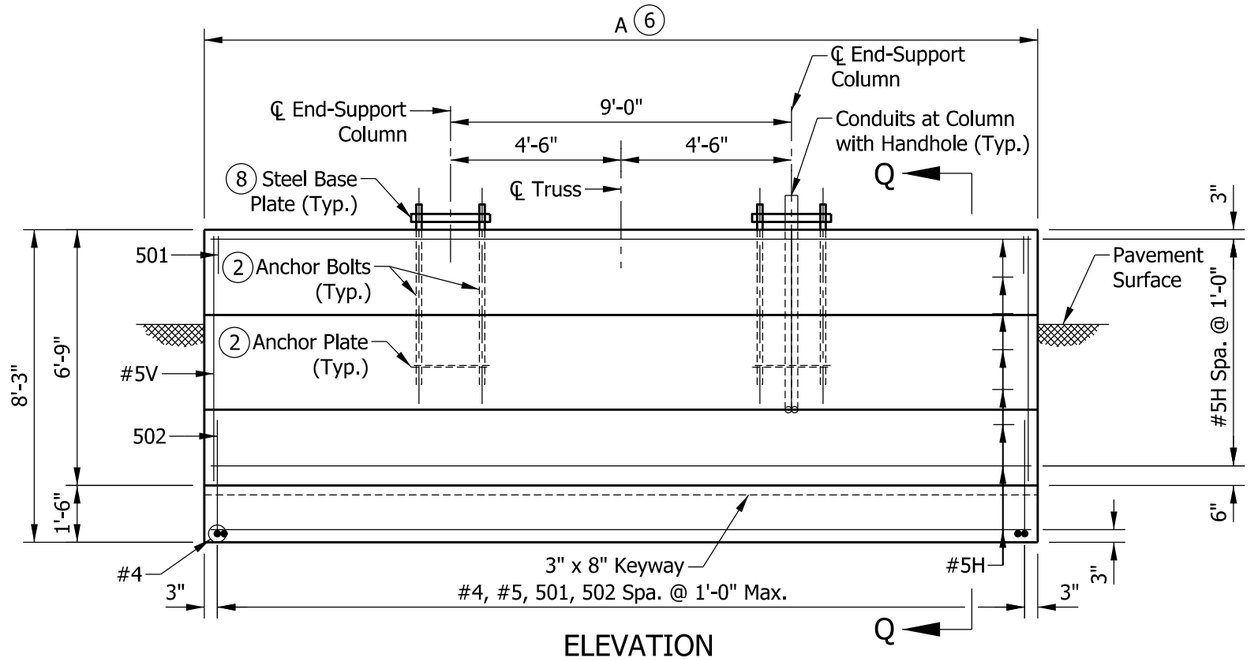

ELEVATION

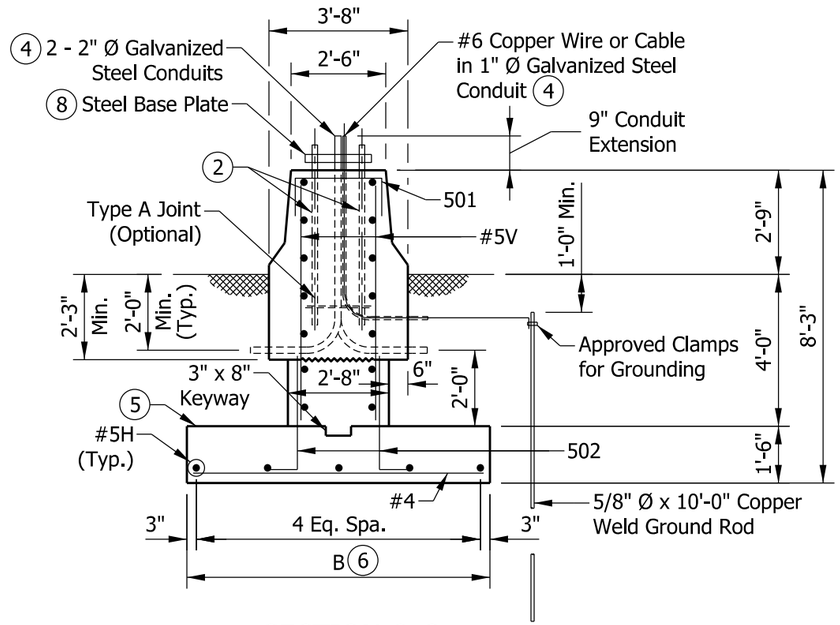

SECTION Q-Q

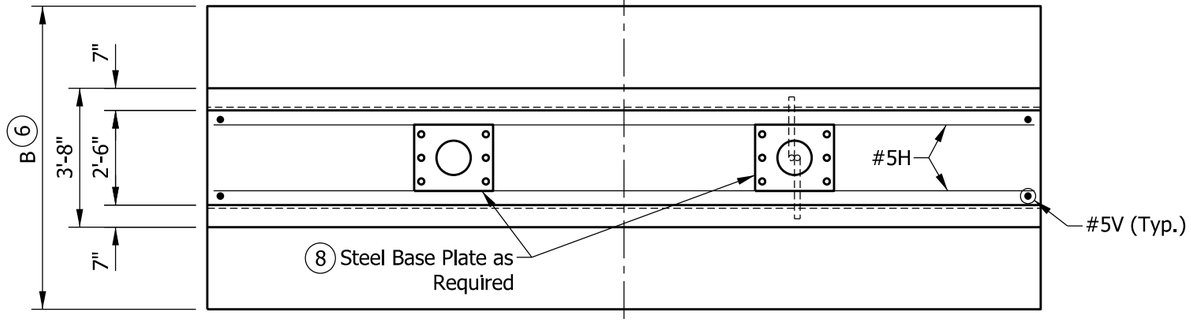

PLAN

NOTES:

1. See Standard Drawing E 602-CCMB-03 for barrier wall width transition.
2. See Standard Drawing E 802-DMSS-12 for anchor bolt and anchor plate details.
3. Surface seal top and sides of barrier railing to the pavement surface.
4. Thread and cap both ends of steel conduit.
5. Top of foundation shall be level.
6. For variable dimensions, reinforcing schedule, and estimated quantities, see Standard Drawing E 802-DMSS-23.
7. Top of the footing shall be a minimum of 4'-0" below the pavement or ground surface.
8. See Standard Drawing E 802-DMSS-10 for base plate details.

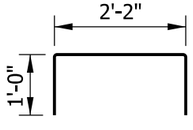

501 x 4'-2"

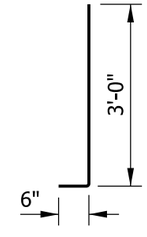

502 x 3'-6"

LEGEND:

H = Horizontal

V = Vertical

INDIANA DEPARTMENT OF TRANSPORTATION

DYNAMIC MESSAGE SIGN STRUCTURE SPREAD FOUNDATION AT 33" CONCRETE BARRIER WALL

SEPTEMBER 2013

STANDARD DRAWING NO. E 802-DMSS-20

ALFREDO B. HANZA REGISTERED No. 60020657 STATE OF INDIANA PROFESSIONAL ENGINEER

/s/ Alfredo B. Hanza 02/05/13

DESIGN STANDARDS ENGINEER DATE

/s/ Mark A. Miller 03/27/13

CHIEF ENGINEER DATE

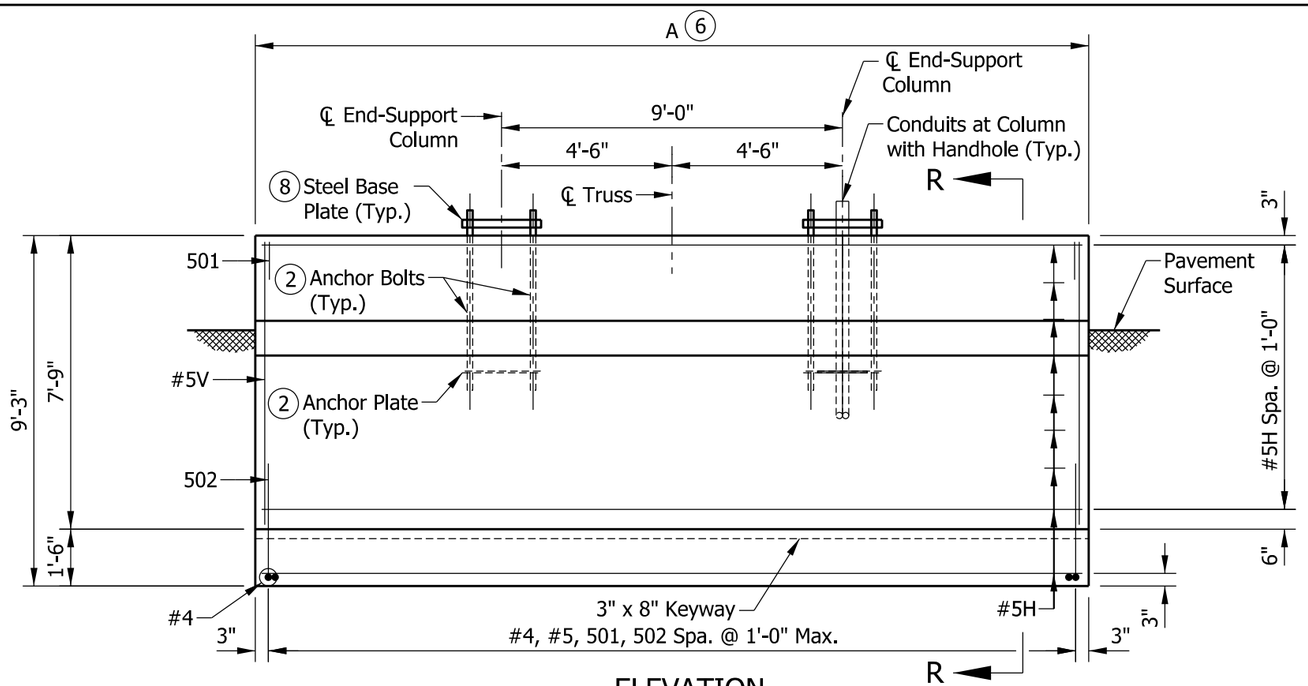

ELEVATION

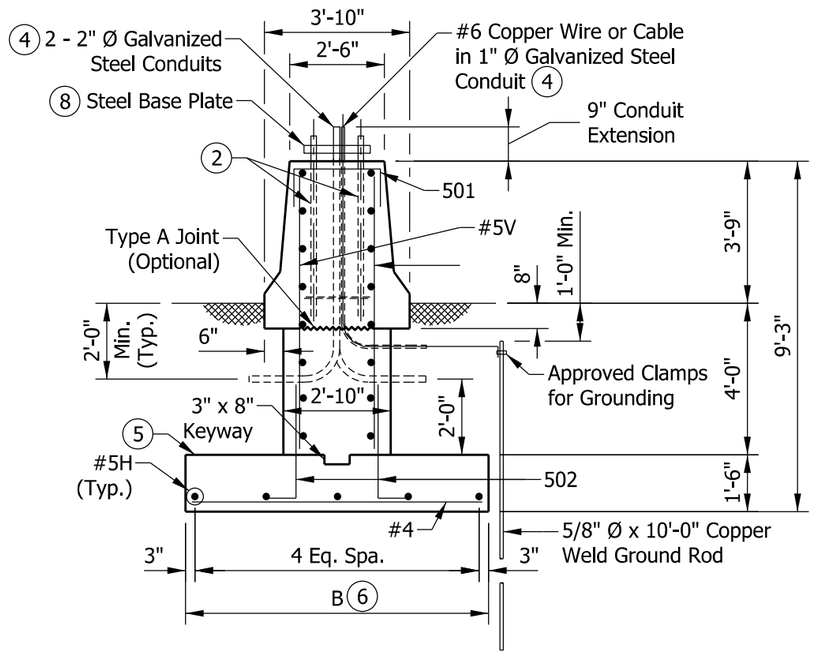

SECTION R-R

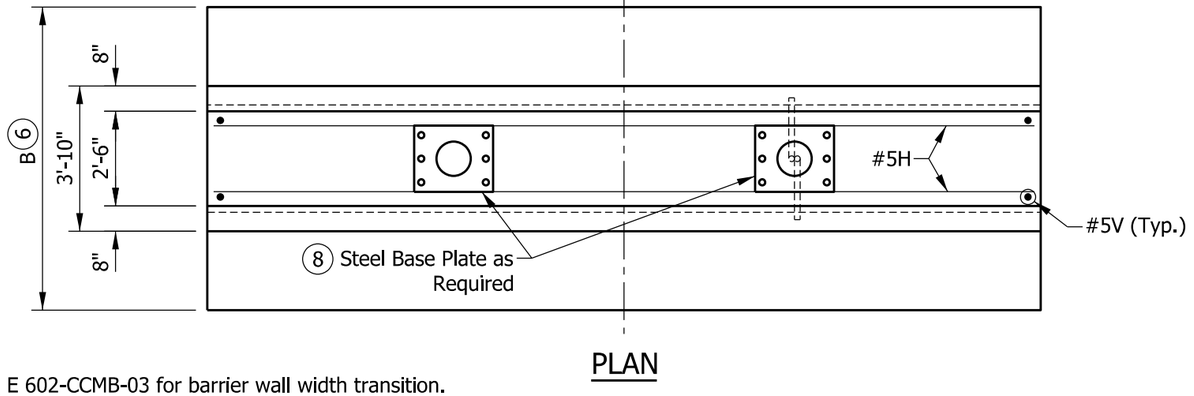

PLAN

LEGEND:

H = Horizontal

V = Vertical

NOTES:

1. See Standard Drawing E 602-CCMB-03 for barrier wall width transition.
2. See Standard Drawing E 802-DMSS-12 for anchor bolt and anchor plate details.
3. Surface seal top and sides of barrier railing to the pavement surface.
4. Thread and cap both ends of steel conduit.
5. Top of foundation shall be level.
6. For variable dimensions, reinforcing schedule, and estimated quantities, see Standard Drawing E 802-DMSS-23.
7. Top of the footing shall be a minimum of 4'-0" below the pavement or ground surface.
8. See Standard Drawing E 802-DMSS-10 for base plate details.

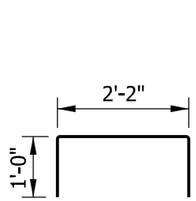

501 x 4'-2"

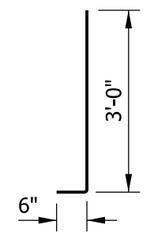

502 x 3'-6"

INDIANA DEPARTMENT OF TRANSPORTATION

DYNAMIC MESSAGE SIGN STRUCTURE
SPREAD FOUNDATION
AT 45" CONCRETE BARRIER WALL
SEPTEMBER 2013

STANDARD DRAWING NO. E 802-DMSS-21

ALFREDO B. HANZA REGISTERED No. 60020657 STATE OF INDIANA PROFESSIONAL ENGINEER

/s/ Alfredo B. Hanza 02/05/13
DESIGN STANDARDS ENGINEER DATE

/s/ Mark A. Miller 03/27/13
CHIEF ENGINEER DATE

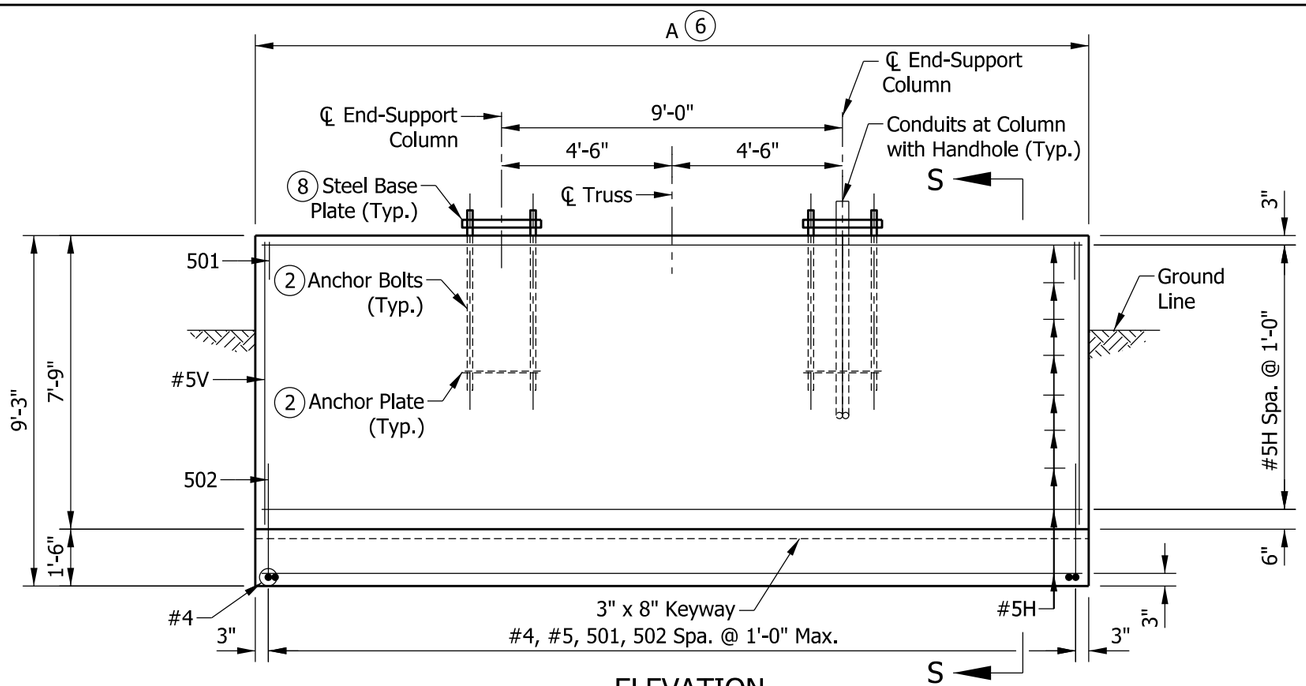

ELEVATION

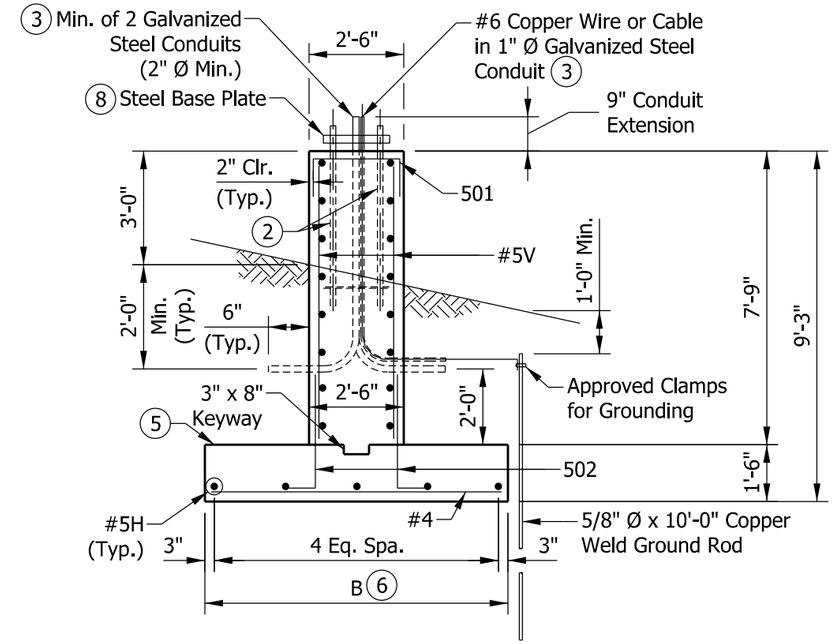

SECTION S-S

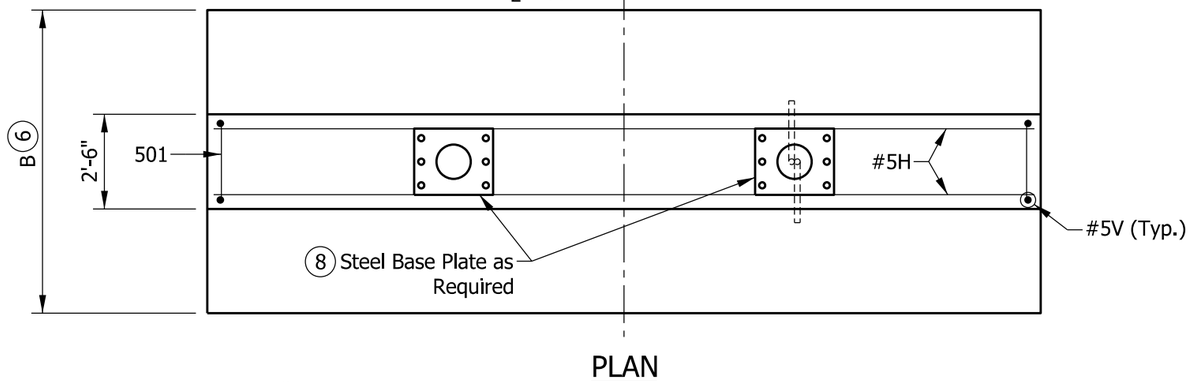

PLAN

LEGEND:

H = Horizontal

V = Vertical

NOTES:

1. See Standard Drawing E 602-CCMB-03 for barrier wall width transition.
2. See Standard Drawing E 802-DMSS-12 for anchor bolt and anchor plate details.
3. Surface seal top and sides of barrier railing to the pavement surface.
4. Thread and cap both ends of steel conduit.
5. Top of foundation shall be level.
6. For variable dimensions, reinforcing schedule, and estimated quantities, see Standard Drawing E 802-DMSS-23.
7. Top of the footing shall be a minimum of 4'-0" below the pavement or ground surface.
8. See Standard Drawing E 802-DMSS-10 for base plate details.

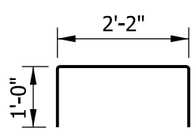

501 x 4'-2"

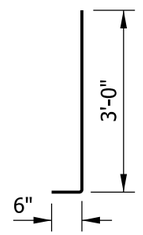

502 x 3'-6"

INDIANA DEPARTMENT OF TRANSPORTATION

DYNAMIC MESSAGE SIGN STRUCTURE
SPREAD FOUNDATION
AT MEDIAN OR SHOULDER, 36" HEIGHT
SEPTEMBER 2013

STANDARD DRAWING NO. E 802-DMSS-22

ALFREDO B. HANZA REGISTERED No. 60020657 STATE OF INDIANA PROFESSIONAL ENGINEER

/s/ Alfredo B. Hanza 02/05/13
DESIGN STANDARDS ENGINEER DATE

/s/ Mark A. Miller 03/27/13
CHIEF ENGINEER DATE

TABLE 1: SPREAD FOUNDATIONS FOR DYNAMIC MESSAGE OVERHEAD SIGN STRUCTURE				
MAX. SIGN AREA (SFT)	ALLOWABLE GROSS SOIL BEARING PRESSURE (PSF)	FOOTING DIMENSION		TYPE OF BARRIER
		LENGTH, A (FT)	WIDTH, B (FT)	
300	1500 - 2499	26'	7'	33", 45" or 36" Median/Shoulder
	2500 - 3499	22'	5'	33", 45" or 36" Median/Shoulder
	> 3499	20'	5'	33", 45" or 36" Median/Shoulder

TABLE 2: SPREAD FOUNDATIONS DIMENSIONS AND BILL OF MATERIALS

FOOTING DIMENSION		TYPE OF BARRIER	#4		#5H		#5V		501		502		TOTAL EPOXY COATED REINFORCING BARS (LBS)	CONCRETE CLASS A (CYS)	SURFACE SEAL (SYS)
A (FT)	B (FT)		NO. BARS	LENGTH	NO. BARS	LENGTH	NO. BARS	LENGTH	NO. BARS	LENGTH	NO. BARS	LENGTH			
26'	7'	33" Concrete Barrier	27	6'-8"	19	25'-8"	54	6'-6"	27	4'-2"	54	3'-6"	1309	27.9	23.9
		45" Concrete Barrier	27	6'-8"	21	25'-8"	54	7'-6"	27	4'-2"	54	3'-6"	1418	30.9	29.7
		36" Median or Shoulder Barrier	27	6'-8"	21	25'-8"	54	7'-6"	27	4'-2"	54	3'-6"	1418	28.8	24.6
22'	5'	33" Concrete Barrier	23	4'-8"	19	21'-8"	46	6'-6"	23	4'-2"	46	3'-6"	1081	21.2	20.2
		45" Concrete Barrier	23	4'-8"	21	21'-8"	46	7'-6"	23	4'-2"	46	3'-6"	1175	23.7	25.1
		36" Median or Shoulder Barrier	23	4'-8"	21	21'-8"	46	7'-6"	23	4'-2"	46	3'-6"	1175	21.9	20.8
20'	5'	33" Concrete Barrier	21	4'-8"	19	19'-8"	42	6'-6"	21	4'-2"	42	3'-6"	984	19.3	18.4
		45" Concrete Barrier	21	4'-8"	21	19'-8"	42	7'-6"	21	4'-2"	42	3'-6"	1069	21.6	22.9
		36" Median or Shoulder Barrier	21	4'-8"	21	19'-8"	42	7'-6"	21	4'-2"	42	3'-6"	1069	19.9	18.9

NOTES:

1. Geotechnical recommendations for Allowable Gross Soil Bearing Pressure shall be obtained to determine footing size and reinforcement shown in Tables 1 and 2.
2. If Allowable Gross Soil Bearing Pressure is less than 1500 psf, a drilled shaft or other special foundation shall be used.
3. See Standard Drawings E 802-DMSS-20 through -22 for locations of dimensions and reinforcing bars.

INDIANA DEPARTMENT OF TRANSPORTATION

DYNAMIC MESSAGE SIGN STRUCTURE
SPREAD FOUNDATIONS QUANTITIES

SEPTEMBER 2013

STANDARD DRAWING NO. E 802-DMSS-23

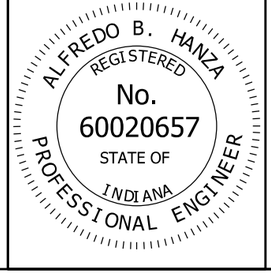

/s/ Alfredo B. Hanza 02/05/13
DESIGN STANDARDS ENGINEER DATE

/s/ Mark A. Miller 03/27/13
CHIEF ENGINEER DATE

INDEX	
SHEET NO.	SUBJECT
1	Index
2	Plan & Elevation
3	Truss Sections, Table with Member Sizes
4	Table of Dimensions, Spans 34' thru 81'
5	Table of Dimensions, Spans 82' thru 130' and Camber
6	Chord Connections and Weld Details
7	Flange, Chord End Plate, and Wire Outlet Details
8	Upper Chord Connection Details
9	Lower Chord Connection Details
10	End Support Lower Chord Connections, Alternate HSS Beam Details
11	End Support Base Plate and I.D. Tag Details
12	End Support Top Cap, Handhole, and J-Hook Details
13	End Support Anchor Bolt and Metal Skirt Details
14	Interior Walkway Grating Details
15	Interior Walkway Grating Details
16	Lighting Walkway
17	Lighting Walkway
18	Lighting Walkway Profile
19	Lighting Walkway and Handrail Assembly
20	Lighting Walkway, Handrail Hinge, and Grating Details
21	Lighting Walkway Fixture Mount Details
22	Spread Foundation at 33" Concrete Barrier Wall
23	Spread Foundation at 45" Concrete Barrier Wall
24	Spread Foundation for Median or Shoulder, 36" Height
25	Spread Foundations Quantities
26	Alternate Drilled Shaft Foundation at 33" Concrete Barrier Wall
27	Alternate Drilled Shaft Foundation at 45" Concrete Barrier Wall
28	Alternate Drilled Shaft Foundation for Median or Shoulder, 36" Height
29	Alternate Drilled Shaft Foundations Quantities

INDIANA DEPARTMENT OF TRANSPORTATION

SIGN BOX TRUSS STRUCTURE
DRAWING INDEX

SEPTEMBER 2013

STANDARD DRAWING NO. E 802-SBTS-01

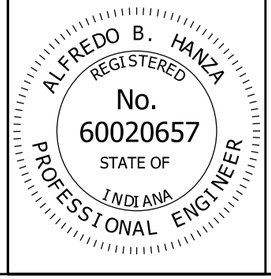

/s/ Alfredo B. Hanza *02/05/13*
DESIGN STANDARDS ENGINEER DATE

/s/ Mark A. Miller *03/27/13*
CHIEF ENGINEER DATE

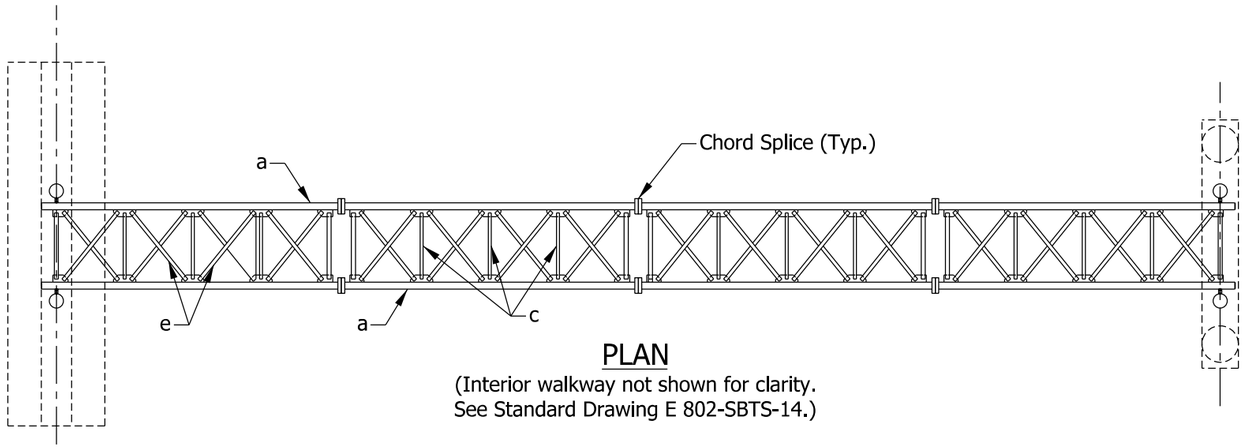

PLAN

(Interior walkway not shown for clarity.
See Standard Drawing E 802-SBTS-14.)

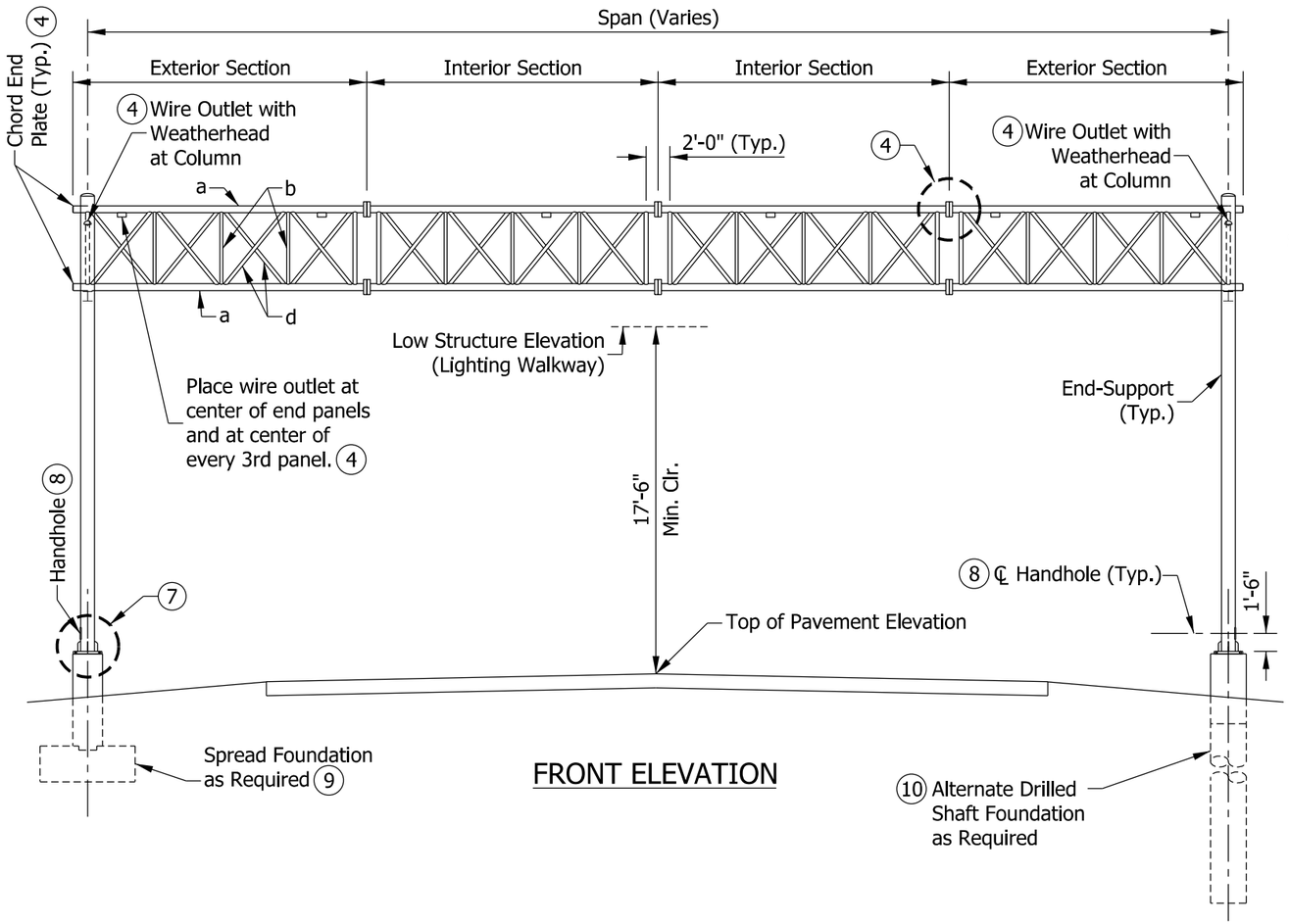

FRONT ELEVATION

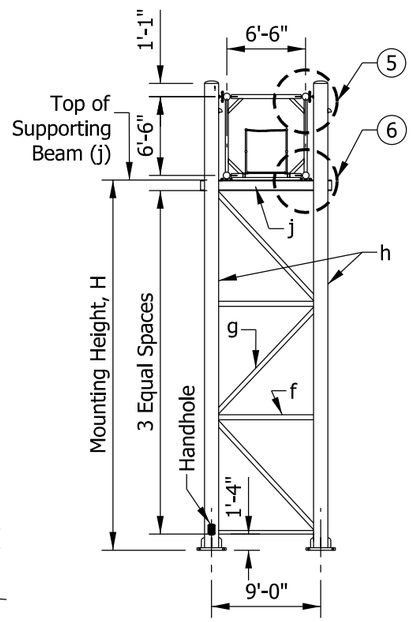

END-SUPPORT

NOTES:

1. See Standard Drawing E 802-SBTS-03 for member sizes.
2. Maximum deviation of any chord from a straight line in any section shall be 1/8" for box truss to be a maximum of 3/8" out of a straight line over the entire length of the structure in the vertical plane.
3. All truss members are aluminum. End-support members are steel. Walkways, bearing elements, and wire outlet are aluminum.

(4) See Standard Drawing E 802-SBTS-07 for connection flange, chord end plate, and wire outlet details.

(5) See Standard Drawing E 802-SBTS-08 for upper chord connection details and E 802-SBTS-12 for top cap, handhole, and J-hook details.

(6) See Standard Drawing E 802-SBTS-09 for lower chord connection details. See Standard Drawing E 802-SBTS-10 for alternate HSS beam and saddle shim detail.

(7) See Standard Drawing E 802-SBTS-11 for base plate detail and E 802-SBTS-13 for anchor bolts and skirt details.

(8) See Standard Drawing E 802-SBTS-12 for handhole detail.

(9) See Standard Drawings E 802-SBTS-22 through -25 for spread foundations.

(10) See Standard Drawings E 802-SBTS-26 through -29 for alternate drilled shaft foundations.

LEGEND

TRUSS MEMBERS
- a - Chords
- b - Verticals
- c - Horizontals
- d - Vertical Diagonals
- e - Horizontal Diagonals

END-SUPPORT MEMBERS
- h - Columns
- f - Horizontals
- g - Diagonals
- j - Supporting Beam

INDIANA DEPARTMENT OF TRANSPORTATION

SIGN BOX TRUSS STRUCTURE PLAN & ELEVATION

SEPTEMBER 2013

STANDARD DRAWING NO. E 802-SBTS-02

ALFREDO B. HANZA REGISTERED No. 60020657 STATE OF INDIANA PROFESSIONAL ENGINEER

/s/ Alfredo B. Hanza — 02/05/13
DESIGN STANDARDS ENGINEER — DATE

/s/ Mark A. Miller — 03/27/13
CHIEF ENGINEER — DATE

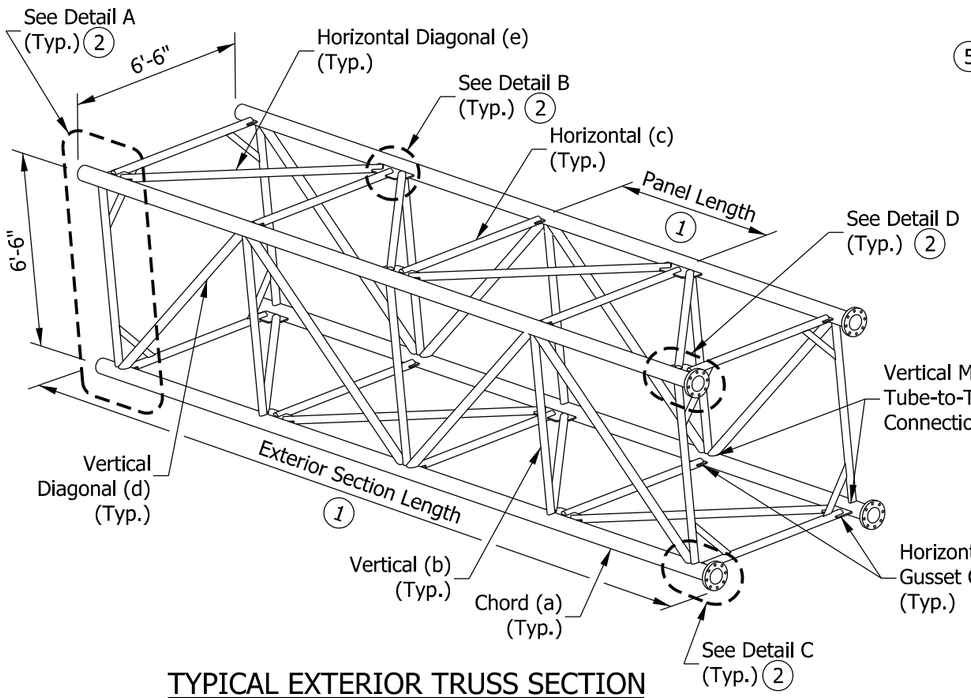

TYPICAL EXTERIOR TRUSS SECTION

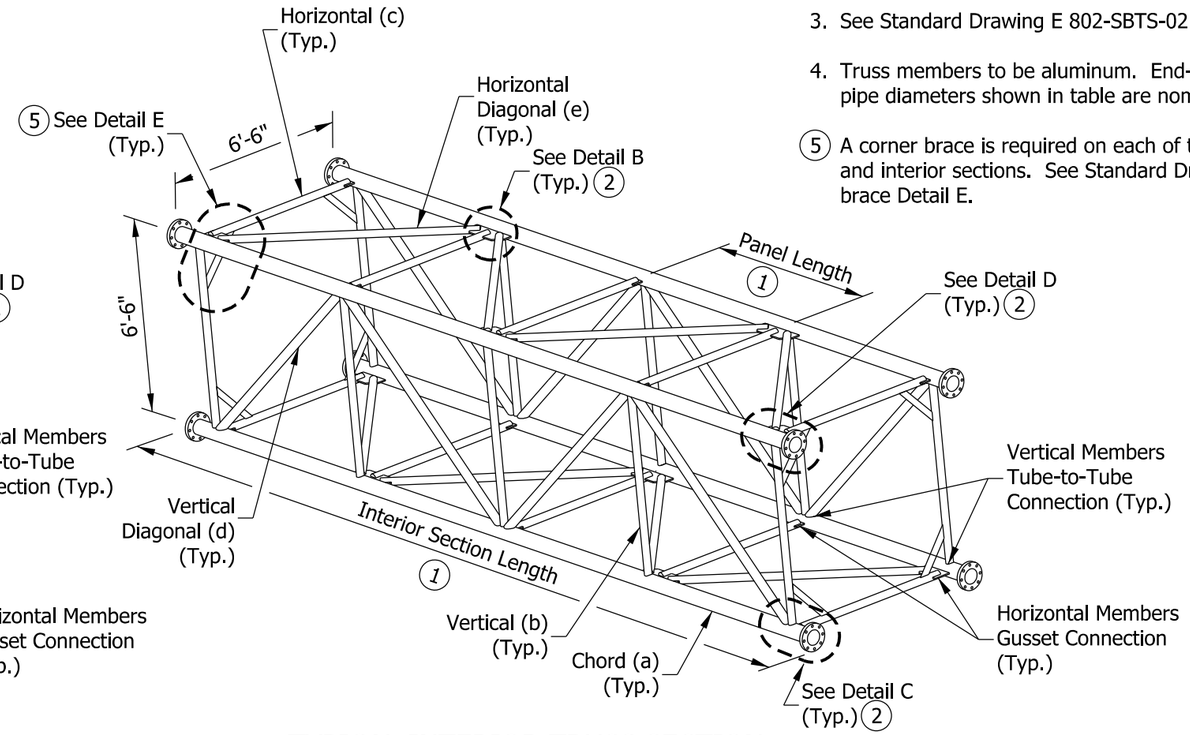

TYPICAL INTERIOR TRUSS SECTION

TRUSS TYPE	MAX. SIGN AREA	MAX. SPAN	MAX. MOUNTING HEIGHT	TRUSS MEMBERS, ALUMINUM										END-SUPPORT MEMBERS, STEEL						
				CHORD		VERTICAL		HORIZONTAL		VERTICAL DIAGONAL		HORIZONTAL DIAGONAL		HORIZONTAL		DIAGONAL		COLUMN		SUPPORTING BEAM
			H	a		b		c		d		e		f		g		h		j
				DIA.	THK	DIA.	THK	DIA.	THK	DIA.	THK	DIA.	THK	DIA.	THK	DIA.	THK	DIA.	THK	
	SQ. FT.	FT.	FT.	IN.	IN.	IN.	IN.	IN.	IN.	IN.	IN.	IN.	IN.	IN.	IN.	IN.	IN.	IN.	IN.	
A	500	130	28'-6"	6.00	0.250	2.50	0.250	4.00	0.188	3.00	0.375	4.00	0.375	5.00	0.375	5.00	0.375	14.00	0.500	W 8 x 58 or HSS 8" x 8" x 1/2"
B	700	100	28'-6"	6.50	0.375	3.00	0.375	4.00	0.188	3.00	0.500	4.00	0.375	5.00	0.375	7.00	0.375	14.00	0.500	
C		130	28'-6"	7.00	0.375	3.00	0.375	4.00	0.188	3.00	0.500	4.00	0.500	5.00	0.375	8.00	0.500	14.00	0.593	
D	900	100	28'-6"	7.00	0.375	3.00	0.375	4.00	0.188	3.00	0.500	4.00	0.500	5.00	0.375	8.00	0.500	18.00	0.500	
E		130	28'-6"	7.00	0.500	3.00	0.375	4.00	0.250	3.00	0.500	4.00	0.500	5.00	0.375	8.00	0.593	18.00	0.562	W 10 x 68 or HSS 10" x 10" x 1/2"

NOTES:

(1) Number of panels and sections varies. See table on Standard Drawing E 802-SBTS-04 and -05 for recommended dimensions.

(2) See Standard Drawing E 802-SBTS-06 for welded connections and Details A through F.

3. See Standard Drawing E 802-SBTS-02 for Legend.

4. Truss members to be aluminum. End-support members to be steel. Steel pipe diameters shown in table are nominal pipe size.

(5) A corner brace is required on each of the eight external corners of exterior and interior sections. See Standard Drawing E 802-SBTS-06 for corner brace Detail E.

INDIANA DEPARTMENT OF TRANSPORTATION

SIGN BOX TRUSS STRUCTURE TRUSS SECTIONS IN ISOMETRIC VIEWS, TABLE WITH MEMBER SIZES

SEPTEMBER 2013

STANDARD DRAWING NO. E 802-SBTS-03

ALFREDO B. HANZA
REGISTERED
No. 60020657
STATE OF INDIANA
PROFESSIONAL ENGINEER

/s/ Alfredo B. Hanza 02/05/13
DESIGN STANDARDS ENGINEER DATE

/s/ Mark A. Miller 03/27/13
CHIEF ENGINEER DATE

DIMENSIONS FOR SIGN BOX TRUSSES (34' THRU 81')

SPAN	EXTERIOR SECTIONS					INTERIOR SECTIONS			
SPAN-TRUSS LENGTH, (FT)	NO. OF EXT. SECTIONS	NO. OF PANELS PER SECTION	VARIABLE END DIMEN.	PANEL LENGTH	SECTION LENGTH	NO. OF INT. SECTIONS	NO. OF PANELS PER SECTION	PANEL LENGTH	SECTION LENGTH
34	1	6	6"	5'-6"	35'-6"	0			
35	1	6	6"	5'-8"	36'-6"	0			
36	2	3	6"	5'-6"	18'-9"	0			
37	2	3	6"	5'-8"	19'-3"	0			
38	2	3	6"	5'-10"	19'-9"	0			
39	2	3	6"	6'-0"	20'-3"	0			
40	2	3	6"	6'-2"	20'-9"	0			
41	2	3	6"	6'-4"	21'-3"	0			
42	2	3	6"	6'-6"	21'-9"	0			
43	2	4	6"	5'-0"	22'-3"	0			
44	2	4	6"	5'-1 1/2"	22'-9"	0			
45	2	4	6"	5'-3"	23'-3"	0			
46	2	4	6"	5'-4 1/2"	23'-9"	0			
47	2	4	6"	5'-6"	24'-3"	0			
48	2	4	6"	5'-7 1/2"	24'-9"	0			
49	2	4	6"	5'-9"	25'-3"	0			
50	2	4	6"	5'-10 1/2"	25'-9"	0			
51	2	4	6"	6'-0"	26'-3"	0			
52	2	4	6"	6'-1 1/2"	26'-9"	0			
53	2	4	6"	6'-3"	27'-3"	0			
54	2	4	6"	6'-4 1/2"	27'-9"	0			
55	2	4	6"	6'-6"	28'-3"	0			
56	2	5	5 1/4"	5'-3 3/4"	28'-9"	0			
57	2	5	6 1/4"	5'-4 3/4"	29'-3"	0			
58	2	5	6"	5'-6"	29'-9"	0			
59	2	5	5 3/4"	5'-7 1/4"	30'-3"	0			
60	2	5	5 1/2"	5'- 8 1/2"	30'-9"	0			
61	2	5	6 1/2"	5'-9 1/2"	31'-3"	0			
62	2	5	6 1/4"	5'-10 3/4"	31'-9"	0			
63	2	5	6"	6'-0"	32'-3"	0			
64	2	5	5 3/4"	6'-1 1/4"	32'-9"	0			
65	2	5	5 1/2"	6'-2 1/2"	33'-3"	0			
66	2	5	5 1/4"	6'-3 3/4"	33'-9"	0			
67	2	5	6 1/4"	6'-4 3/4"	34'-3"	0			
68	2	5	6"	6'-6"	34'-9"	0			
69	2	4	6"	5'-4"	23'-7"	1	4	5'-4"	23'-4"
70	2	4	6"	5'-5"	23'-11"	1	4	5'-5"	23'-8"
71	2	4	6"	5'-6"	24'-3"	1	4	5'-6"	24'-0"
72	2	4	6"	5'-7"	24'-7"	1	4	5'-7"	24'-4"
73	2	4	6"	5'-8"	24'-11"	1	4	5'-8"	24'-8"
74	2	4	6"	5"-9"	25'-3"	1	4	5"-9"	25'-0"
75	2	4	6"	5'-10"	25'-7"	1	4	5'-10"	25'-4"
76	2	4	6"	5'-11"	25'-11"	1	4	5'-11"	25'-8"
77	2	4	6"	6'-0"	26'-3"	1	4	6'-0"	26'-0"
78	2	4	6"	6'-1 "	26'-7"	1	4	6'-1 "	26'-4"
79	2	4	6"	6'-2"	26'-11"	1	4	6'-2"	26'-8"
80	2	4	6"	6'-3"	27'-3"	1	4	6'-3"	27'-0"
81	2	4	6"	6'-4"	27'-7"	1	4	6'-4"	27'-4"

NOTES:

1. All panels on a truss shall be the same length. The minimum panel length is 5'-0" and the maximum is 6'-6".
2. A single interior section in a truss shall have an even number of panels to maintain the pattern of the vertical diagonals.
3. Use minimum number of sections for each box truss structure, while maintaining the maximum section length at 36'-6".
4. See Standard Drawing E 802-SBTS-05 for required camber.

INDIANA DEPARTMENT OF TRANSPORTATION

SIGN BOX TRUSS STRUCTURE
TABLE OF DIMENSIONS
SPANS 34' THRU 81'
SEPTEMBER 2013

STANDARD DRAWING NO. E 802-SBTS-04

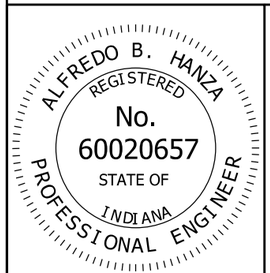

/s/ Alfredo B. Hanza 02/05/13
DESIGN STANDARDS ENGINEER DATE

/s/ Mark A. Miller 03/27/13
CHIEF ENGINEER DATE

DIMENSIONS FOR SIGN BOX TRUSSES (82' THRU 130')

SPAN SPAN-TRUSS LENGTH, (FT)	EXTERIOR SECTIONS					INTERIOR SECTIONS			
	NO. OF EXT. SECTIONS	NO. OF PANELS PER SECTION	VARIABLE END DIMEN.	PANEL LENGTH	SECTION LENGTH	NO. OF INT. SECTIONS	NO. OF PANELS PER SECTION	PANEL LENGTH	SECTION LENGTH
82	2	4	6"	6'-5"	27'-11"	1	4	6'-5"	27'-8"
83	2	4	6"	6'-6"	28'-3"	1	4	6'-6"	28'-0"
84	2	5	5 3/4"	5'-7 3/4"	30'-5 1/2"	1	4	5'-7 3/4"	24'-7"
85	2	5	6 1/2"	5'-8 1/2"	30'-10"	1	4	5'-8 1/2"	24'-10"
86	2	5	5 1/2"	5'-9 1/2"	31'-2"	1	4	5'-9 1/2"	25'-2"
87	2	5	6 1/4"	5'-10 1/4"	31'-6 1/2"	1	4	5'-10 1/4"	25'-5"
88	2	5	7"	5'-11"	31'-11"	1	4	5'-11"	25'-8"
89	2	5	6"	6'-0"	32'-3"	1	4	6'-0"	26'-0"
90	2	5	6 3/4"	6'-0 3/4"	32'-7 1/2"	1	4	6'-0 3/4"	26'-3"
91	2	5	5 3/4"	6'-1 3/4"	32'-11 1/2"	1	4	6'-1 3/4"	26'-7"
92	2	5	6 1/2"	6'-2 1/2"	33'-4"	1	4	6'-2 1/2"	26'-10"
93	2	5	5 1/2"	6'-3 1/2"	33'-8"	1	4	6'-3 1/2"	27'-2"
94	2	5	6 1/4"	6'-4 1/4"	34'-1/2"	1	4	6'-4 1/4"	27'-5"
95	2	5	5 1/4"	6'-5 1/4"	34'-4 1/2"	1	4	6'-5 1/4"	27'-9"
96	2	5	6"	6'-6"	34'-9"	1	4	6'-6"	28'-0"
97	2	4	6"	5'-7 1/2"	24'-9"	2	4	5'-7 1/2"	24'-6"
98	2	4	6"	5'-8 1/4"	25'-0"	2	4	5'-8 1/4"	24'-9"
99	2	4	6"	5'-9"	25'-3"	2	4	5'-9"	25'-0"
100	2	4	6"	5'-9 3/4"	25'-6"	2	4	5'-9 3/4"	25'-3"
101	2	4	6"	5'-10 1/2"	25'-9"	2	4	5'-10 1/2"	25'-6"
102	2	4	6"	5'-11 1/4"	26'-0"	2	4	5'-11 1/4"	25'-9"
103	2	4	6"	6'-0"	26'-3"	2	4	6'-0"	26'-0"
104	2	4	6"	6'-0 3/4"	26'-6"	2	4	6'-0 3/4"	26'-3"
105	2	4	6"	6'-1 1/2"	26'-9"	2	4	6'-1 1/2"	26'-6"
106	2	4	6"	6'-2 1/4"	27'-0"	2	4	6'-2 1/4"	26'-9"
107	2	4	6"	6'-3"	27'-3"	2	4	6'-3"	27'-0"
108	2	4	6"	6'-3 3/4"	27'-6"	2	4	6'-3 3/4"	27'-3"
109	2	4	6"	6'-4 1/2"	27'-9"	2	4	6'-4 1/2"	27'-6"
110	2	4	6"	6'-5 1/4"	28'-0"	2	4	6'-5 1/4"	27'-9"
111	2	4	6"	6'-6"	28'-3"	2	4	6'-6"	28'-0"
112	2	5	6"	5'-3"	28'-6"	2	5	5'-3"	28'-3"
113	2	5	7"	5'-3 1/2"	28'-9 1/2"	2	5	5'-3 1/2"	28'-5 1/2"
114	2	5	5 1/2"	5'-4 1/4"	28'-11 3/4"	2	5	5'-4 1/4"	28'-9 1/4"
115	2	5	6 1/2"	5'-4 3/4"	29'-3 1/4"	2	5	5'-4 3/4"	28'-11 3/4"
116	2	5	7 1/2"	5'-5 1/4"	29'-6 3/4"	2	5	5'-5 1/4"	29'-2 1/4"
117	2	5	6"	5'-6"	29'-9"	2	5	5'-6"	29'-6"
118	2	5	7"	5'-6 1/2"	30'-0 1/2"	2	5	5'-6 1/2"	29'-8 1/2"
119	2	5	5 1/2"	5'-7 1/4"	30'-2 3/4"	2	5	5'-7 1/4"	30'-1/4"
120	2	5	6 1/2"	5'-7 3/4"	30'-6 1/4"	2	5	5'-7 3/4"	30'-2 3/4"
121	2	5	7 1/2"	5'-8 1/4"	30'-9 3/4"	2	5	5'-8 1/4"	30'-5 1/4"
122	2	5	6"	5'-9"	31'-0"	2	5	5'-9"	30'-9"
123	2	5	7"	5'-9 1/2"	31'-3 1/2"	2	5	5'-9 1/2"	30'-11 1/2"
124	2	5	5 1/2"	5'-10 1/4"	31'-5 3/4"	2	5	5'-10 1/4"	31'-3 1/4"
125	2	5	6 1/2"	5'-10 3/4"	31'-9 1/4"	2	5	5'-10 3/4"	31'-5 3/4"
126	2	5	7 1/2"	5'-11 1/4"	32' -0 3/4"	2	5	5'-11 1/4"	31'-8 1/4"
127	2	5	6"	6'-0"	32'-3"	2	5	6'-0"	32'-0"
128	2	5	7"	6'-0 1/2"	32'-6 1/2"	2	5	6'-0 1/2"	32'-2 1/2"
129	2	5	5 1/2"	6'-1 1/4"	32'-8 3/4"	2	5	6'-1 1/4"	32'-6 1/4"
130	2	5	6 1/2"	6'-1 3/4"	33'-1/4"	2	5	6'-1 3/4"	32'-8 3/4"

NOTES:

1. Camber diagrams for truss structures with 2 to 4 sections are shown. Cambers shown are for fabrication only and are measured with trusses fully supported at no-load conditions. Allowable camber tolerance for truss is 25% of specific camber value.
2. See Standard Drawing E 802-SBTS-04 for additional notes.

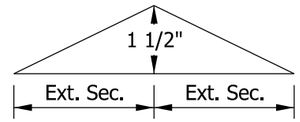

CAMBER DIAGRAM (2-Section Truss)

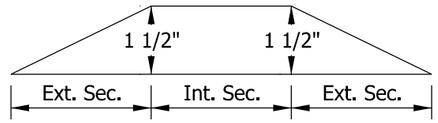

CAMBER DIAGRAM (3-Section Truss)

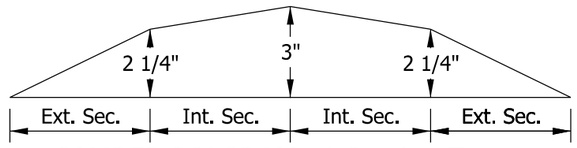

CAMBER DIAGRAM (4-Section Truss)

INDIANA DEPARTMENT OF TRANSPORTATION

SIGN BOX TRUSS STRUCTURE
TABLE OF DIMENSIONS
SPANS 82' THRU 130' AND CAMBER
SEPTEMBER 2013

STANDARD DRAWING NO. E 802-SBTS-05

ALFREDO B. HANZA
REGISTERED
No. 60020657
STATE OF INDIANA
PROFESSIONAL ENGINEER

/s/ Alfredo B. Hanza 02/05/13
DESIGN STANDARDS ENGINEER DATE

/s/ Mark A. Miller 03/27/13
CHIEF ENGINEER DATE

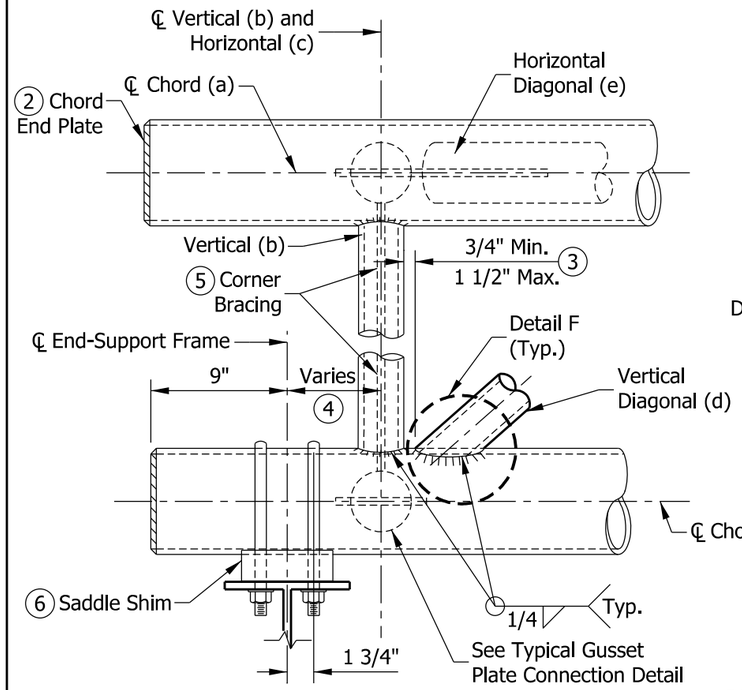

DETAIL A
EXTERIOR SECTION AT END SUPPORT

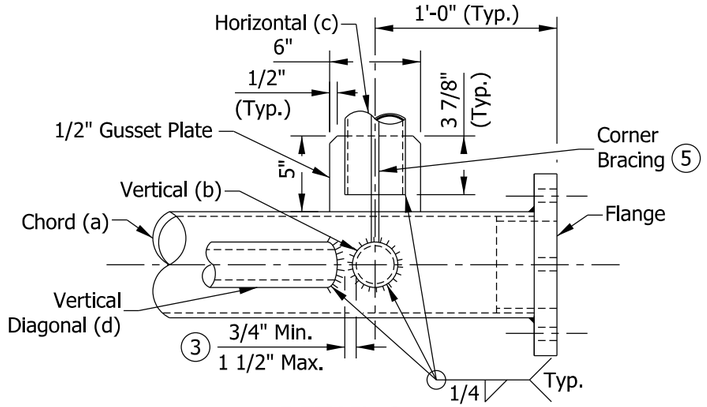

DETAIL C
CHORD AT FLANGE CONNECTION
PLAN VIEW

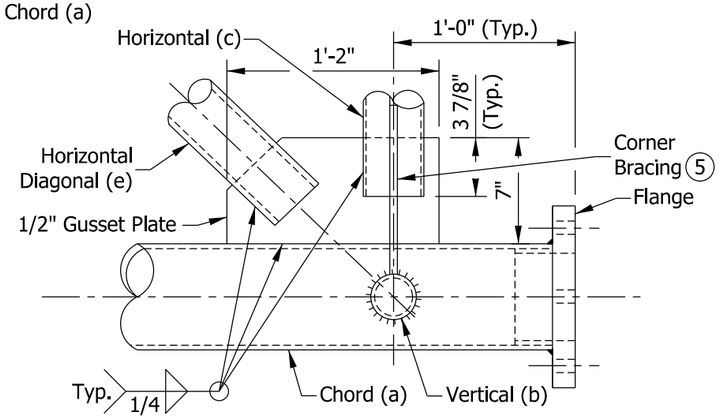

DETAIL D
CHORD AT FLANGE CONNECTION
PLAN VIEW

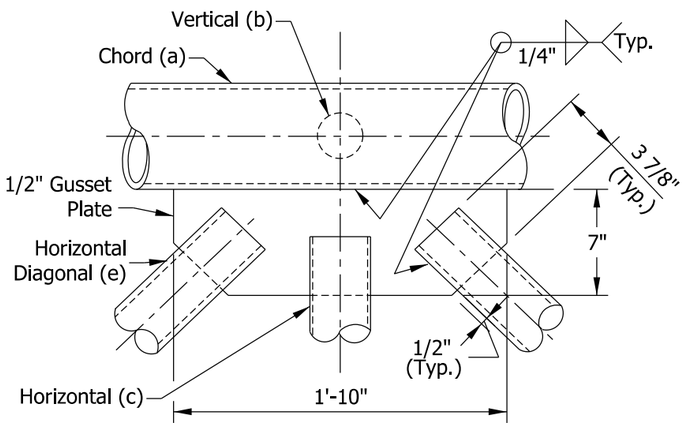

DETAIL B
TYPICAL PANEL CONNECTION
PLAN VIEW

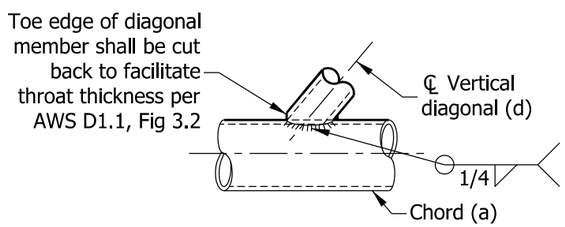

DETAIL F

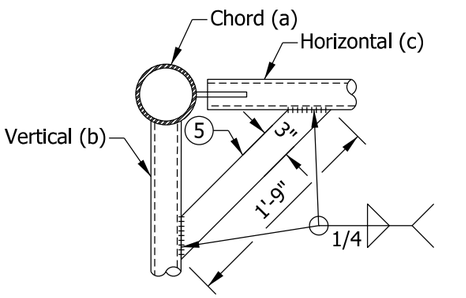

DETAIL E
TYPICAL CORNER BRACING

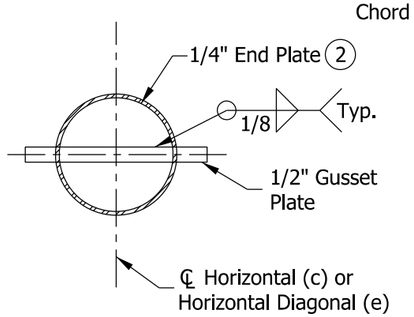

SECTION A-A

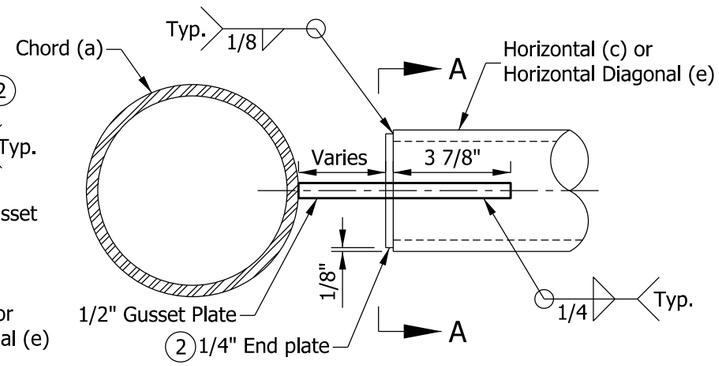

TYPICAL GUSSET PLATE CONNECTION DETAIL
ELEVATION VIEW

NOTES:

1. All bracing members shall be machined to provide a snug fit to the chord along the entire edge of bracing member before welding. See Standard Drawing E 802-SBTS-02 and -03 for member locations.

(2) End plate at horizontal (c) and horizontal diagonal (e) may be welded as one piece and slotted or welded as two pieces after slotting the member. See Standard Drawing E 802-SBTS-07 for chord end plate details.

(3) Vertical and horizontal diagonals shall be fabricated for minimum offset from the panel point offset to provide a 3/4" minimum to 1 1/2" maximum clearance between any diagonal and any horizontal or vertical member.

(4) For variable end dimension, see Standard Drawings E 802-SBTS-04 and -05.

(5) See Standard Drawing E 802-SBTS-03 for corner bracing locations. Each brace member to be 3" x 1'-9" x 1/2" and placed at 45° to vertical.

(6) See Standard Drawing E 802-SBTS-09 or -10 for saddle shim detail.

INDIANA DEPARTMENT OF TRANSPORTATION

SIGN BOX TRUSS STRUCTURE
CHORD CONNECTIONS AND WELD DETAILS

SEPTEMBER 2013

STANDARD DRAWING NO. E 802-SBTS-06

ALFREDO B. HANZA
REGISTERED
No. 60020657
STATE OF INDIANA
PROFESSIONAL ENGINEER

/s/ Alfredo B. Hanza — 02/05/13
DESIGN STANDARDS ENGINEER — DATE

/s/ Mark A. Miller — 03/27/13
CHIEF ENGINEER — DATE

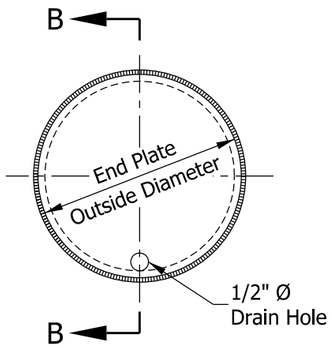

END VIEW

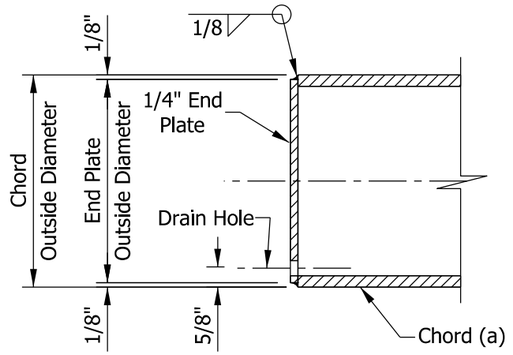

SECTION B-B

CHORD END PLATE DETAILS

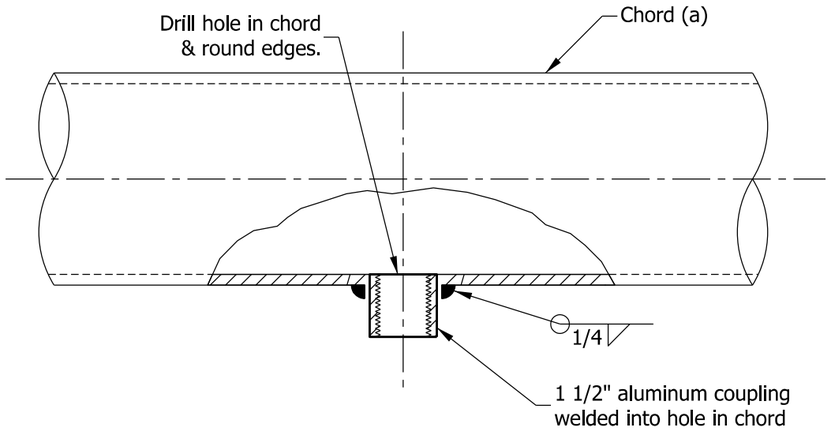

WIRE OUTLET DETAIL

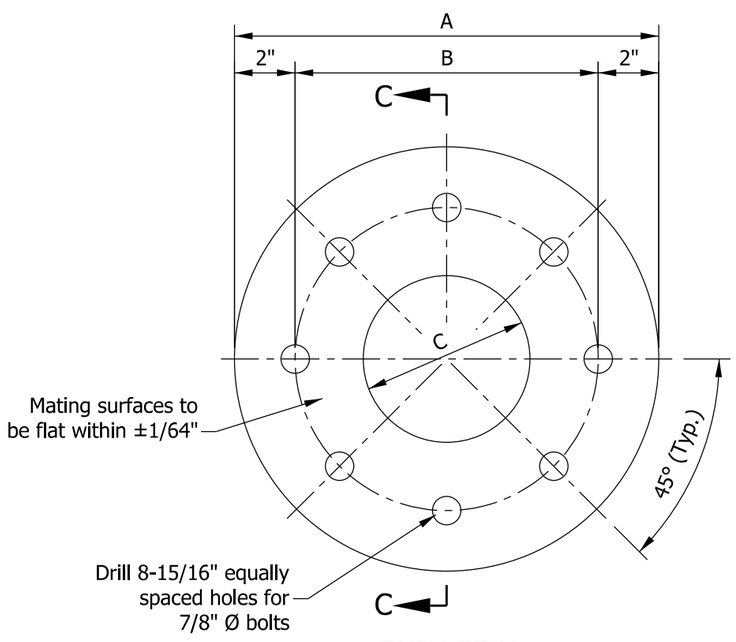

END VIEW

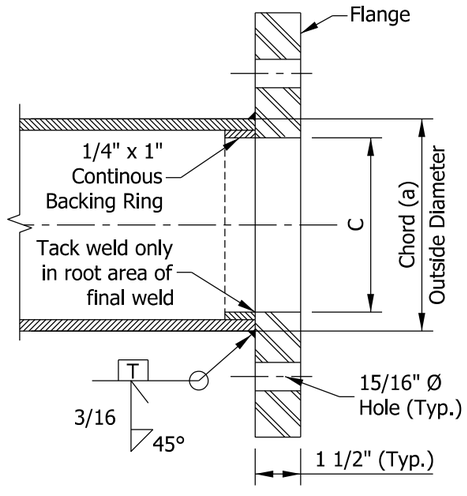

SECTION C-C

FLANGE DETAILS

TABLE OF FLANGE DIMENSIONS				
TRUSS CHORD O.D. x THK.	BOLT SIZE	DIMENSION		
		A	B	C
6" x 1/4"	7/8"	13"	9"	5"
6 1/2" x 3/8"	7/8"	14"	10"	5 1/4"
7" x 3/8"	7/8"	14"	10"	5 3/4"
7" x 1/2"	7/8"	14"	10"	5 1/2"

INDIANA DEPARTMENT OF TRANSPORTATION

SIGN BOX TRUSS STRUCTURE
FLANGE, CHORD END PLATE, AND WIRE OUTLET DETAILS

SEPTEMBER 2013

STANDARD DRAWING NO. E 802-SBTS-07

ALFREDO B. HANZA
REGISTERED
No. 60020657
STATE OF INDIANA
PROFESSIONAL ENGINEER

/s/ Alfredo B. Hanza 03/26/13
DESIGN STANDARDS ENGINEER DATE

/s/ Mark A. Miller 03/27/13
CHIEF ENGINEER DATE

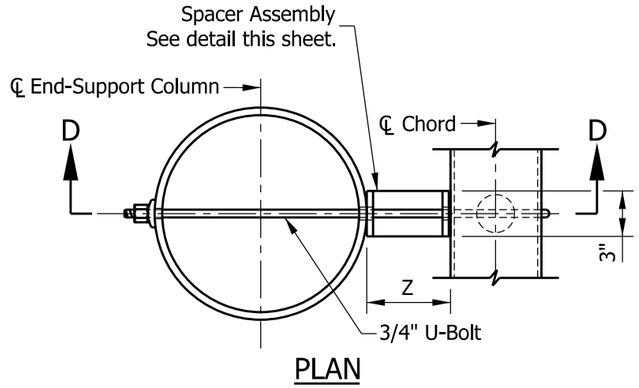

PLAN

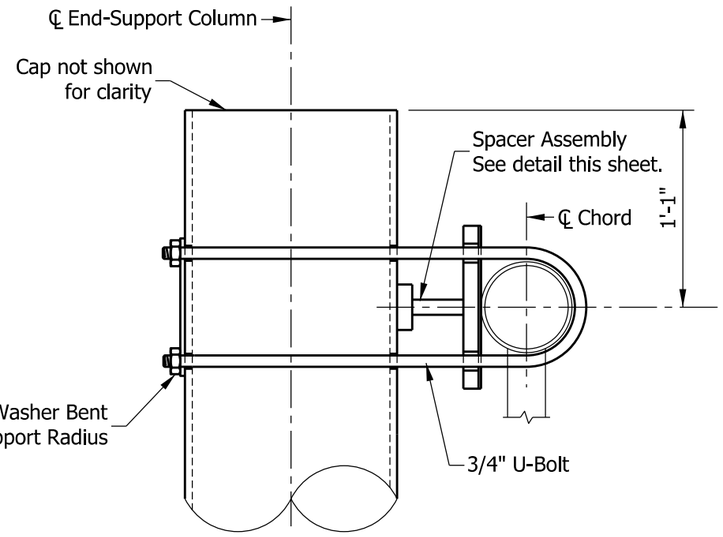

SECTION D-D
UPPER CHORD CONNECTION DETAILS

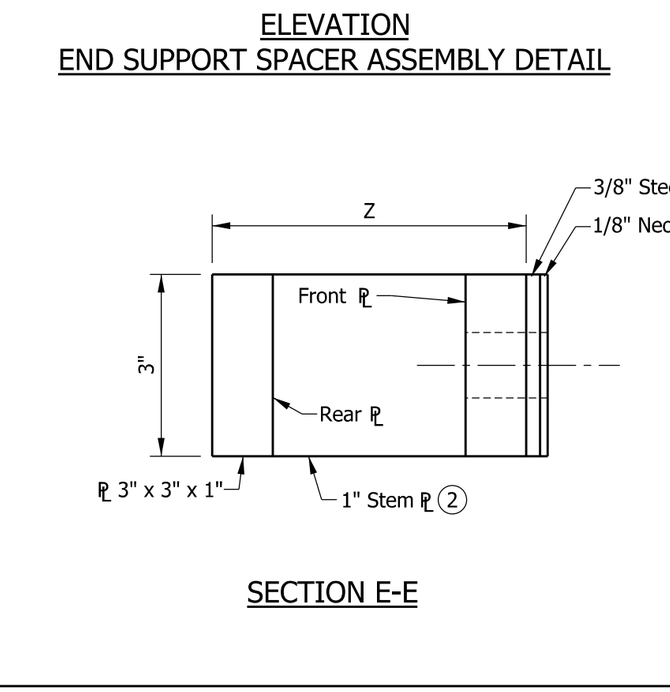

ELEVATION
END SUPPORT SPACER ASSEMBLY DETAIL

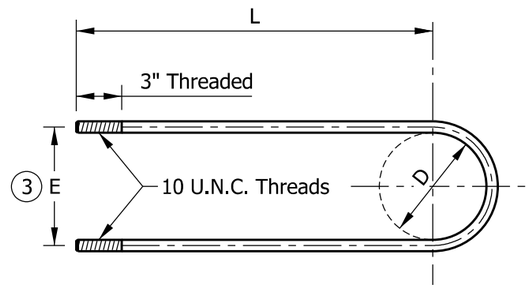

3/4" DIA. STAINLESS STEEL U-BOLT DETAIL

SECTION E-E

NOTES:

(1) Provide isolation from steel-dissimilar metal as required.

(2) For trusses type D or E, the 1" stem plate is not required. Fillet weld front and rear plates together.

(3) Dimension E is equal to the diameter of chord (a) plus 1".

SPACER ASSEMBLY DIMENSIONS						
TRUSS TYPE	END-SUPPORT COLUMN SIZE (h)	CHORD (a)	Ø OF U-BOLT BEND	E	Z	L
	O.D. IN.	O.D. IN.	(D) IN.	IN.	IN.	IN.
A	14	6	6 1/16	7	4 1/2	24
B	14	6 1/2	6 9/16	7 1/2	4 1/4	24
C	14	7	7 1/16	8	4	24
D	18	7	7 1/16	8	2	26
E	18	7	7 1/16	8	2	26

INDIANA DEPARTMENT OF TRANSPORTATION

SIGN BOX TRUSS STRUCTURE
END-SUPPORT
UPPER CHORD CONNECTION DETAILS
SEPTEMBER 2013

STANDARD DRAWING NO. E 802-SBTS-08

ALFREDO B. HANZA
REGISTERED
No. 60020657
STATE OF INDIANA
PROFESSIONAL ENGINEER

/s/ Alfredo B. Hanza 02/05/13
DESIGN STANDARDS ENGINEER DATE

/s/ Mark A. Miller 03/27/13
CHIEF ENGINEER DATE

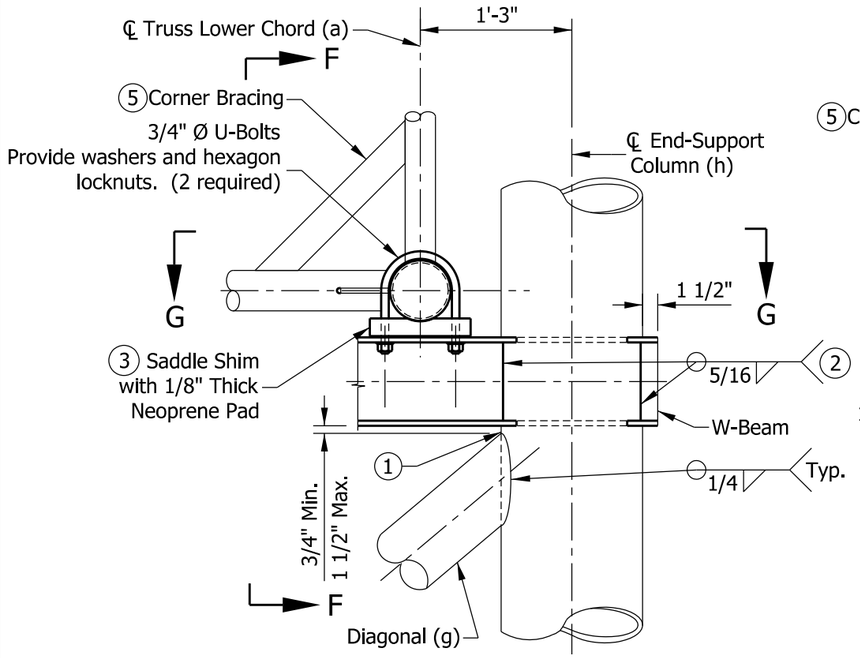

LOWER CHORD CONNECTION DETAIL

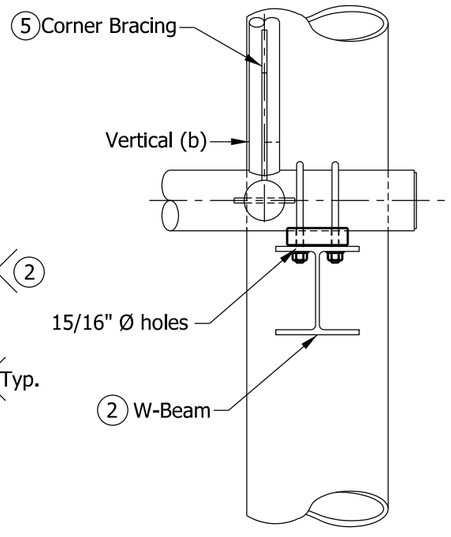

SECTION F-F

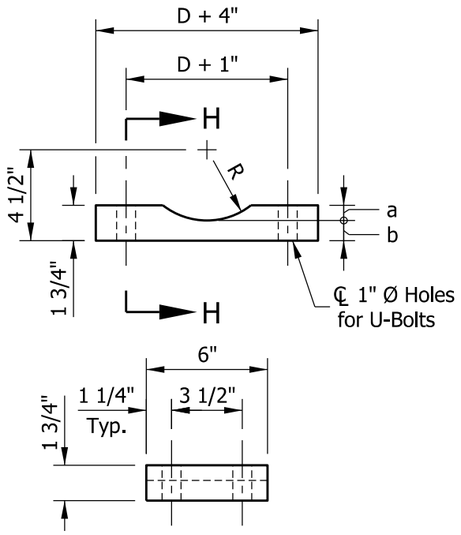

SECTION H-H
SADDLE SHIM DETAIL

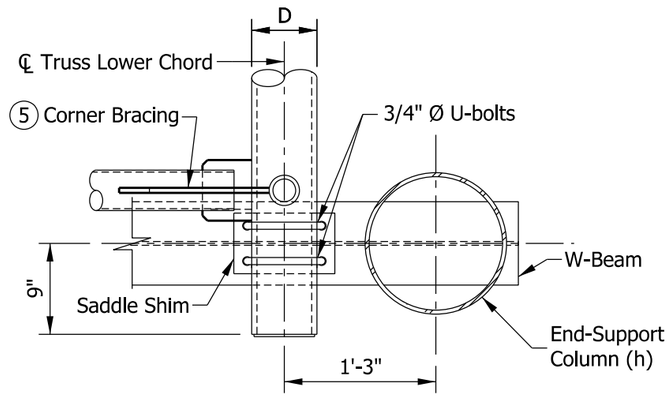

SECTION G-G

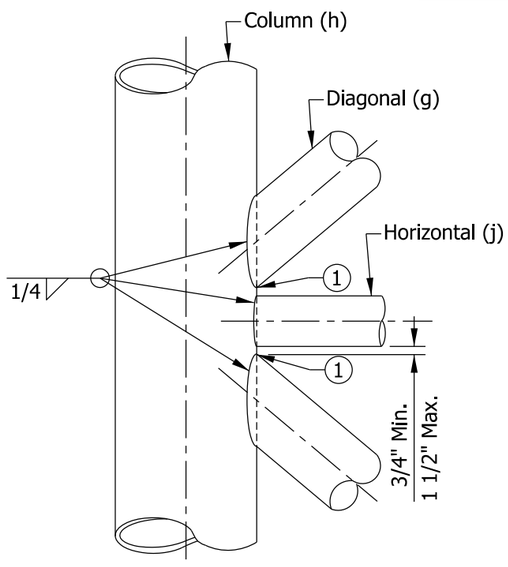

ELEVATION (END-SUPPORT)
TYPICAL BRACING MEMBERS CONNECTION

NOTES:

1. Toe edge of diagonal member shall be cut back to facilitate throat thickness. See Standard Drawing E 802-SBTS-06 Detail F for toe-edge detail.
2. Cut holes in end support columns for W-beams to pass through. Holes to have 1/8" maximum clearance to W-beam. Holes in opposite sides of column to be checked for proper alignment prior to cutting.
3. Provide neoprene pads at all chord-to-W-beam bearing surfaces.
4. See Standard Drawing E 802-SBTS-03 for end-support member sizes.
5. A corner brace is required on each of the eight external corners of exterior and interior sections. Each brace shall be 1'-9" x 3" x 1/2". See Standard Drawing E 802-SBTS-06 for angle bracing Detail E.
6. See Standard Drawing E 802-SBTS-10 for HSS square-beam as an alternate to truss supporting W-beam.

D	a	b
6"	9/32"	1 15/32"
6 1/2"	17/32"	1 7/32"
7"	25/32"	31/32"

R = D/2 + 1/32"

R + b = 4 1/2"

D = Outside Diameter of Chord(a).

INDIANA DEPARTMENT OF TRANSPORTATION

SIGN BOX TRUSS STRUCTURE END-SUPPORT LOWER CHORD CONNECTION DETAILS

SEPTEMBER 2013

STANDARD DRAWING NO. E 802-SBTS-09

ALFREDO B. HANZA
REGISTERED
No. 60020657
STATE OF INDIANA
PROFESSIONAL ENGINEER

/s/ Alfredo B. Hanza 02/05/13
DESIGN STANDARDS ENGINEER DATE

/s/ Mark A. Miller 03/27/13
CHIEF ENGINEER DATE

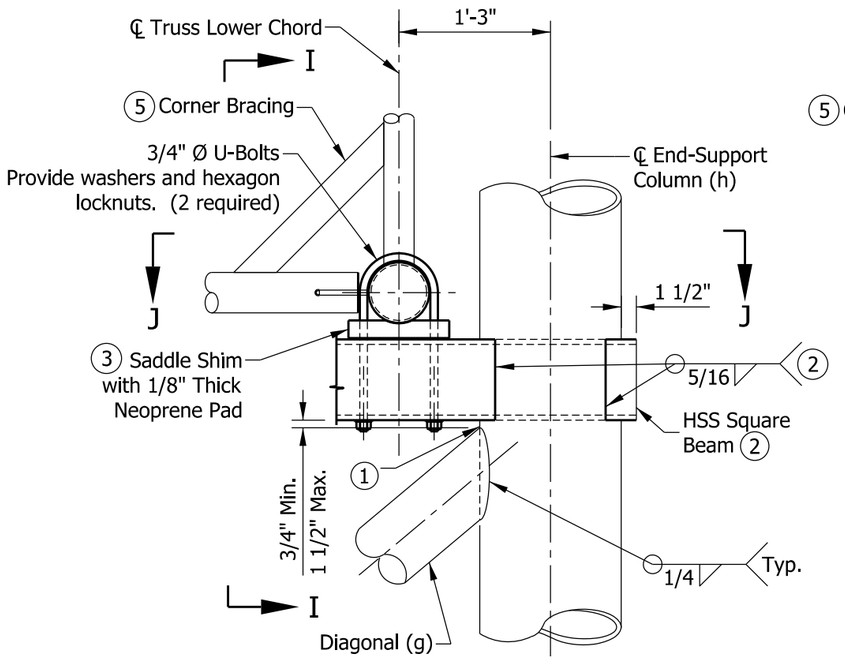

LOWER CHORD CONNECTION DETAIL

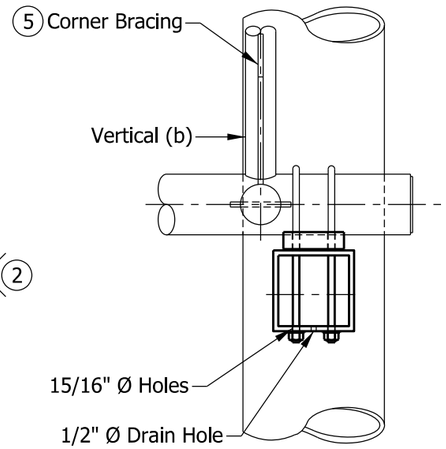

SECTION I-I

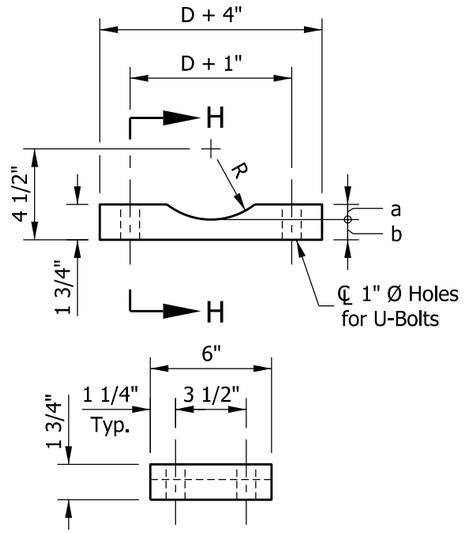

SECTION H-H
SADDLE SHIM DETAIL

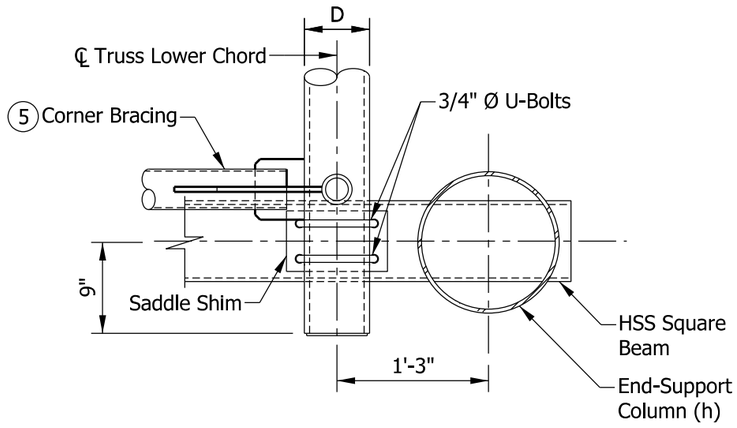

SECTION J-J

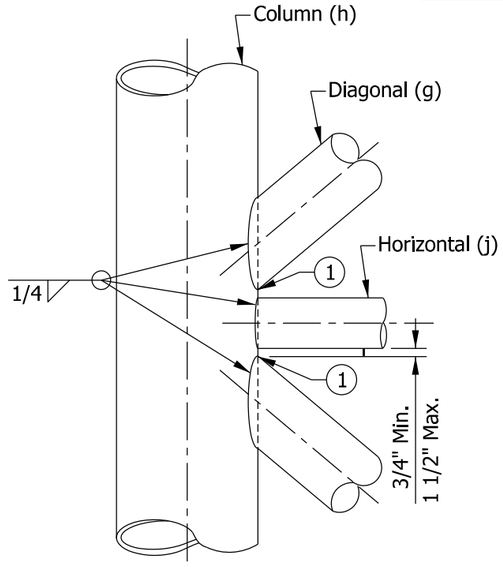

ELEVATION (END-SUPPORT)
TYPICAL BRACING MEMBERS CONNECTION

NOTES:

1. Toe edge of diagonal member shall be cut back to facilitate throat thickness. See Standard Drawing E 802-SBTS-06 Detail F for toe-edge detail.
2. Cut holes in end support columns for square beams to pass through. Holes to have 1/8" maximum clearance to square beam. Holes in opposite sides of column to be checked for proper alignment prior to cutting.
3. Provide neoprene pads at all chord-to-square-beam bearing surfaces.
4. See Standard Drawing E 802-SBTS-03 for end support member sizes.
5. A corner brace is required on each of the eight external corners of exterior and interior sections. Each brace shall be 1'-9" x 3" x 1/2". See Standard Drawing E 802-SBTS-06 for angle bracing Detail E.

D	a	b
6"	9/32"	1 15/32"
6 1/2"	17/32"	1 7/32"
7"	25/32"	31/32"

R = D/2 + 1/32"

R + b = 4 1/2"

D = Outside Diameter of Chord(a).

INDIANA DEPARTMENT OF TRANSPORTATION

SIGN BOX TRUSS STRUCTURE END SUPPORT LOWER CHORD CONNECTION DETAILS, ALTERNATE HSS BEAM

SEPTEMBER 2013

STANDARD DRAWING NO. E 802-SBTS-10

ALFREDO B. HANZA REGISTERED No. 60020657 STATE OF INDIANA PROFESSIONAL ENGINEER

/s/ Alfredo B. Hanza 02/05/13
DESIGN STANDARDS ENGINEER DATE

/s/ Mark A. Miller 03/27/13
CHIEF ENGINEER DATE

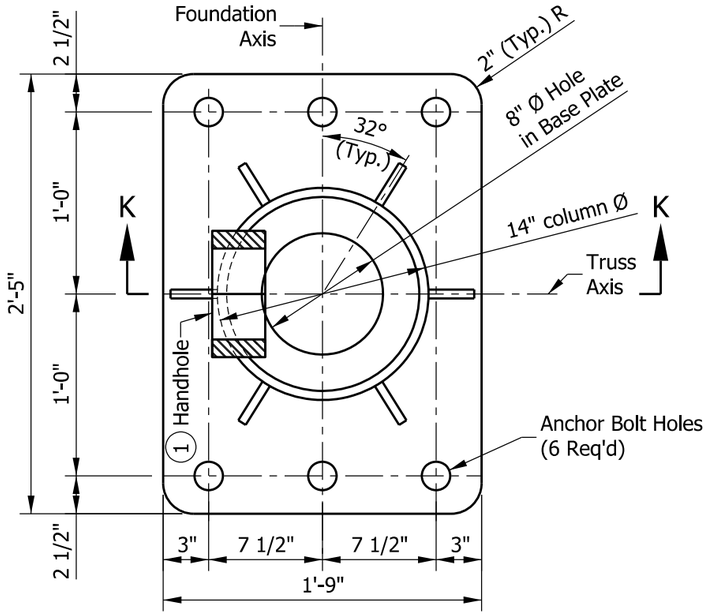

TYPE B-14 BASE PLATE

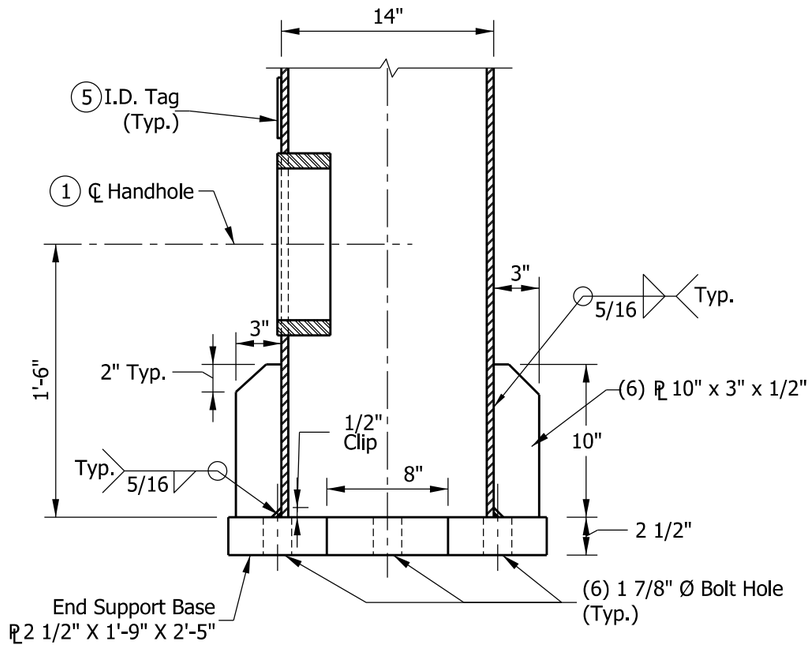

SECTION K-K

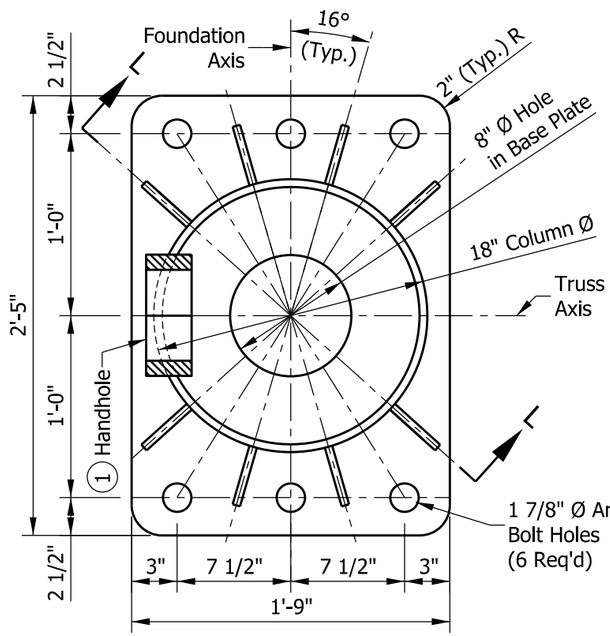

TYPE B-18 BASE PLATE

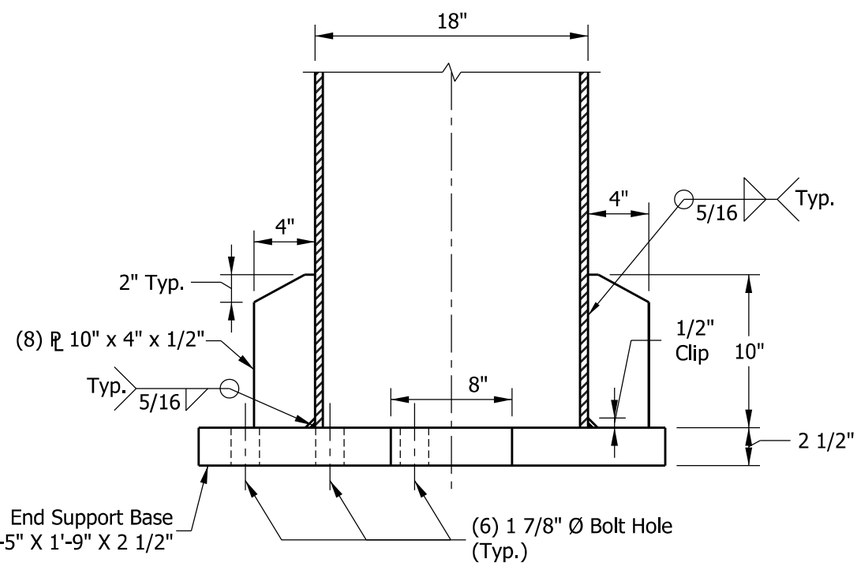

SECTION L-L

NOTES:

1. See Standard Drawing E 802-SBTS-12 for handhole details.
2. Use Type B-14 base plate for end-support column having diameter of 14". Use Type B-18 base plate for end-support column having diameter of 18".
3. See Standard Drawing E 802-SBTS-13 for anchor bolt and metal skirt details.
4. Each end support shall have one handhole at the column base (h). Handhole shall be placed on the column nearest to the sign.
5. I.D. tag is required on each end-support column. I.D. tag is a 1/8" stainless steel plate with the following information stamped in 1/2" black letters:

   Manufacturer _____, Drawing/Order #_____
   Contract #_____, Structure Type _____
   Fabrication Date _____, Structure Length _____
   End Support Mounting Height _____

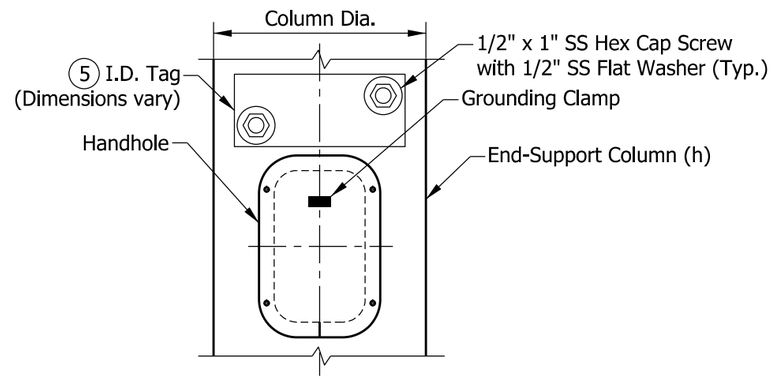

ELEVATION
VIEW FROM HANDHOLE SIDE

INDIANA DEPARTMENT OF TRANSPORTATION

SIGN BOX TRUSS STRUCTURE
END SUPPORT
BASE PLATE AND I.D. TAG DETAILS
SEPTEMBER 2013

STANDARD DRAWING NO. E 802-SBTS-11

ALFREDO B. HANZA REGISTERED No. 60020657 STATE OF INDIANA PROFESSIONAL ENGINEER

/s/ Alfredo B. Hanza	02/05/13
DESIGN STANDARDS ENGINEER	DATE
/s/ Mark A. Miller	03/27/13
CHIEF ENGINEER	DATE

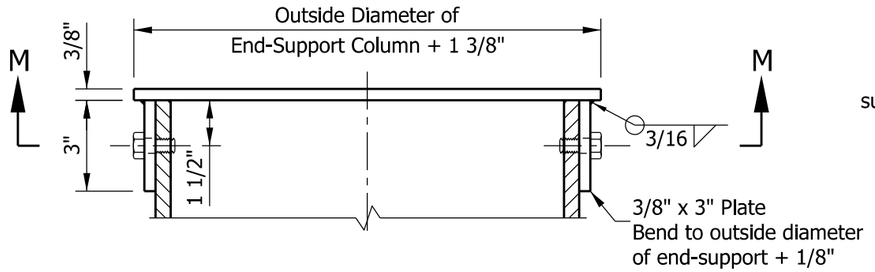

TOP CAP
ELEVATION VIEW

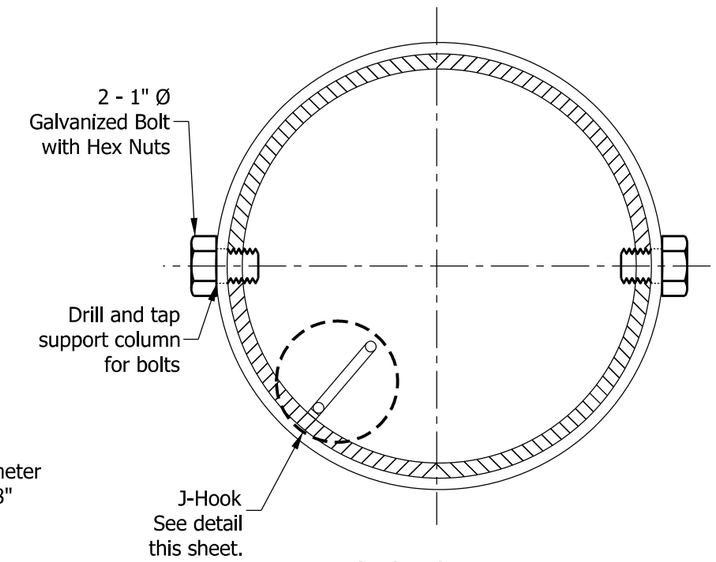

SECTION M-M

NOTES:

1. In lieu of fabricated handhole frame as shown, frame may be cut from 3" plate (rolling direction vertical).
2. See Standard Drawing E 802-SNWR-03 for grounding post details. Grounding post to be placed on far side of support directly opposite center of handhole.
3. See Standard Drawing E 802-SBTS-02 and 10 for handhole locations.
4. See Standard Drawing E 802-SBTS-03 for thicknesses of end-support columns (h).

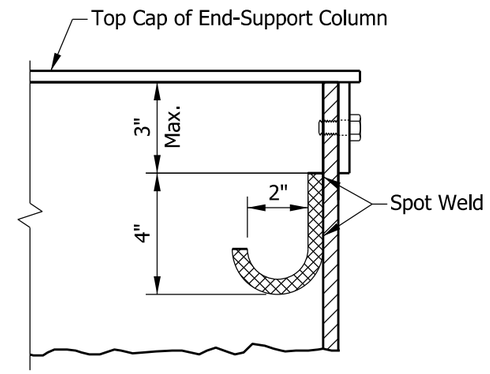

J-HOOK DETAIL

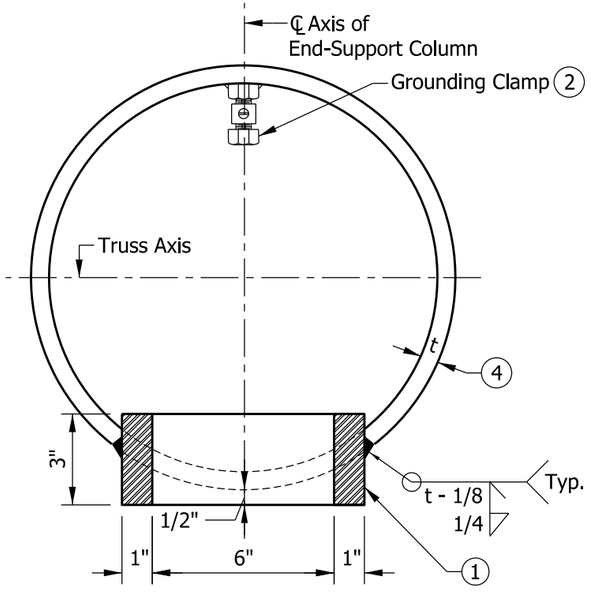

HANDHOLE
SECTION ACROSS COLUMN

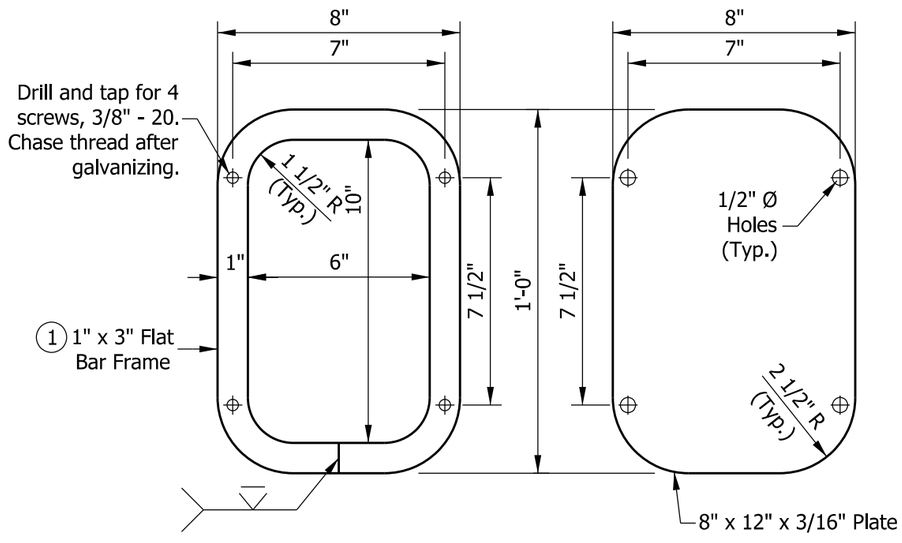

HANDHOLE FRAME DETAIL

HANDHOLE COVER

INDIANA DEPARTMENT OF TRANSPORTATION

SIGN BOX TRUSS STRUCTURE
END-SUPPORT
TOP-CAP, HANDHOLE, AND J-HOOK DETAILS
SEPTEMBER 2013

STANDARD DRAWING NO. E 802-SBTS-12

ALFREDO B. HANZA
REGISTERED
No.
60020657
STATE OF
INDIANA
PROFESSIONAL ENGINEER

/s/ Alfredo B. Hanza 02/05/13
DESIGN STANDARDS ENGINEER DATE

/s/ Mark A. Miller 03/27/13
CHIEF ENGINEER DATE

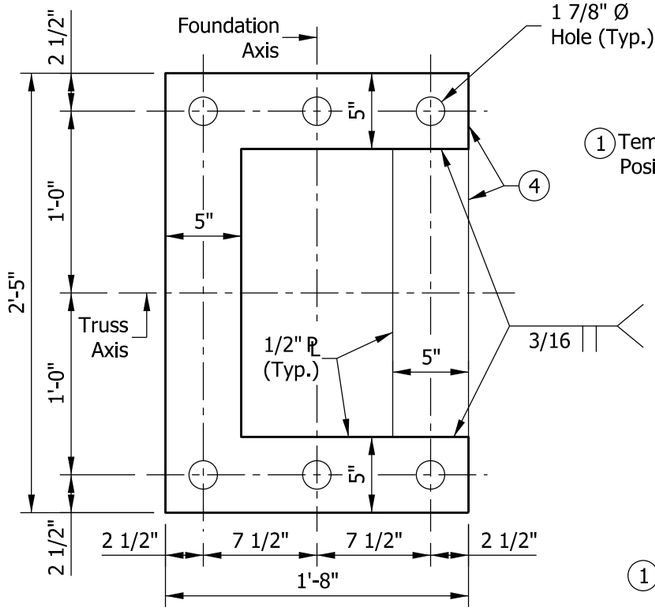

TEMPORARY POSITIONING PLATE

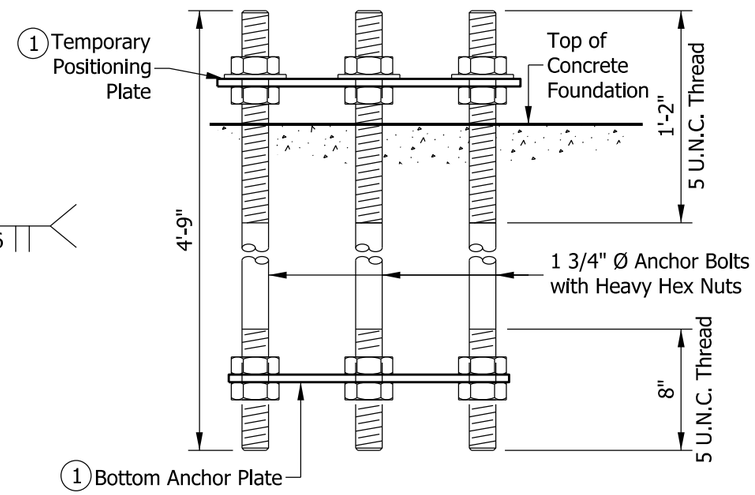

ANCHOR BOLT DETAILS
BEFORE CONCRETE PLACEMENT

NOTES:

1. Use temporary positioning plate and bottom anchor plate for all foundations. Temporary positioning plate should be removed after placing concrete.
2. Secure galvanized metal skirt to base plate after erection as shown in skirt detail.
3. Minimum base plate gap is 2 1/2" and can be increased up to 5 1/2". Metal skirt width shall be at least 1 1/2" more than the actual gap.
4. May use four separate 5" plates welded together to maintain angles and shape as shown.
5. May use two separate 3" and two separate 5" plates welded together to maintain angles and shape as shown.
6. See Standard Drawing E 802-SBTS-11 for end-support base plate details.

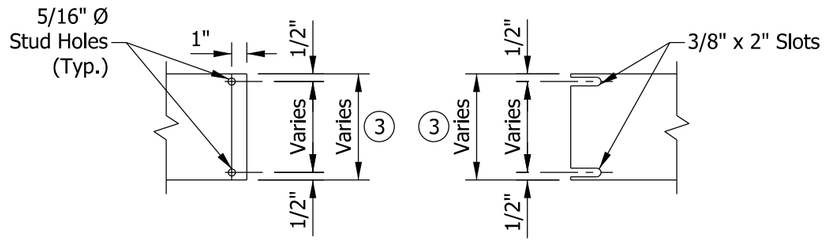

DETAIL G DETAIL H

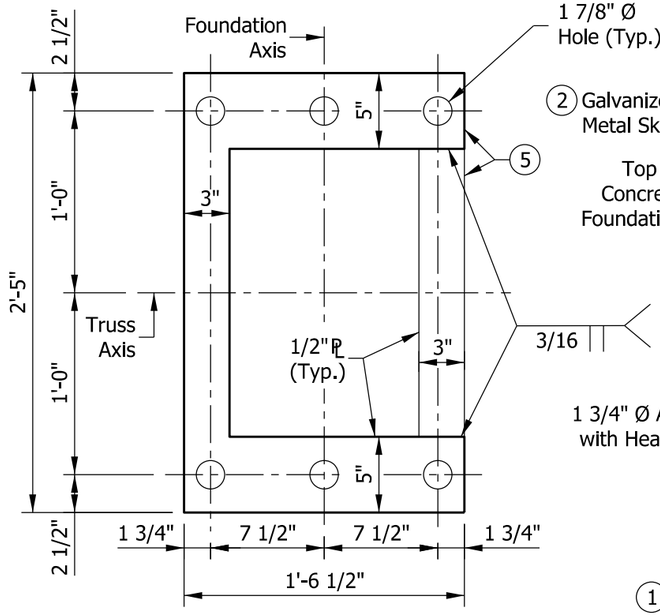

BOTTOM ANCHOR PLATE

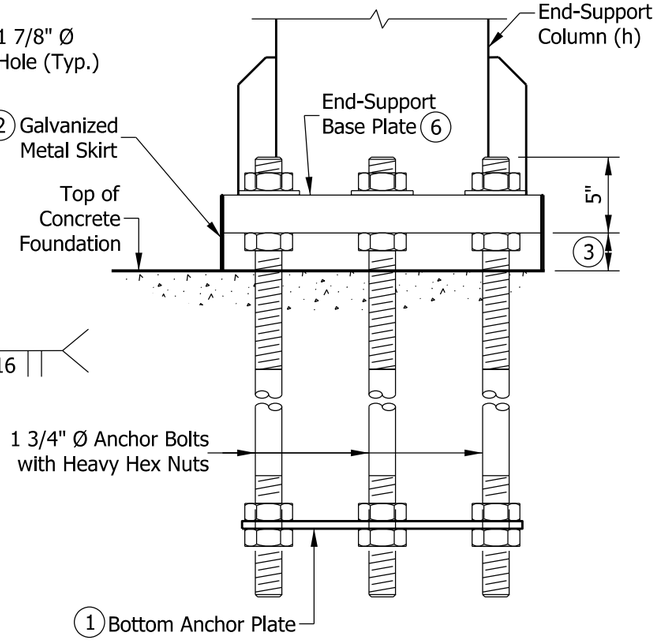

ANCHOR BOLT DETAILS
AFTER CONCRETE PLACEMENT

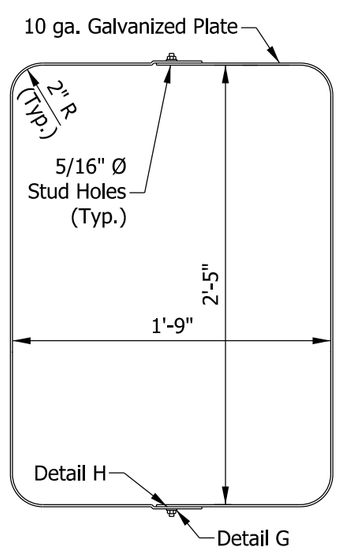

METAL SKIRT DETAIL

INDIANA DEPARTMENT OF TRANSPORTATION

SIGN BOX TRUSS STRUCTURE
END-SUPPORT
ANCHOR BOLT AND METAL SKIRT DETAILS
SEPTEMBER 2013

STANDARD DRAWING NO. E 802-SBTS-13

ALFREDO B. HANZA REGISTERED No. 60020657 STATE OF INDIANA PROFESSIONAL ENGINEER

/s/ Alfredo B. Hanza 03/26/13
DESIGN STANDARDS ENGINEER DATE

/s/ Mark A. Miller 03/27/13
CHIEF ENGINEER DATE

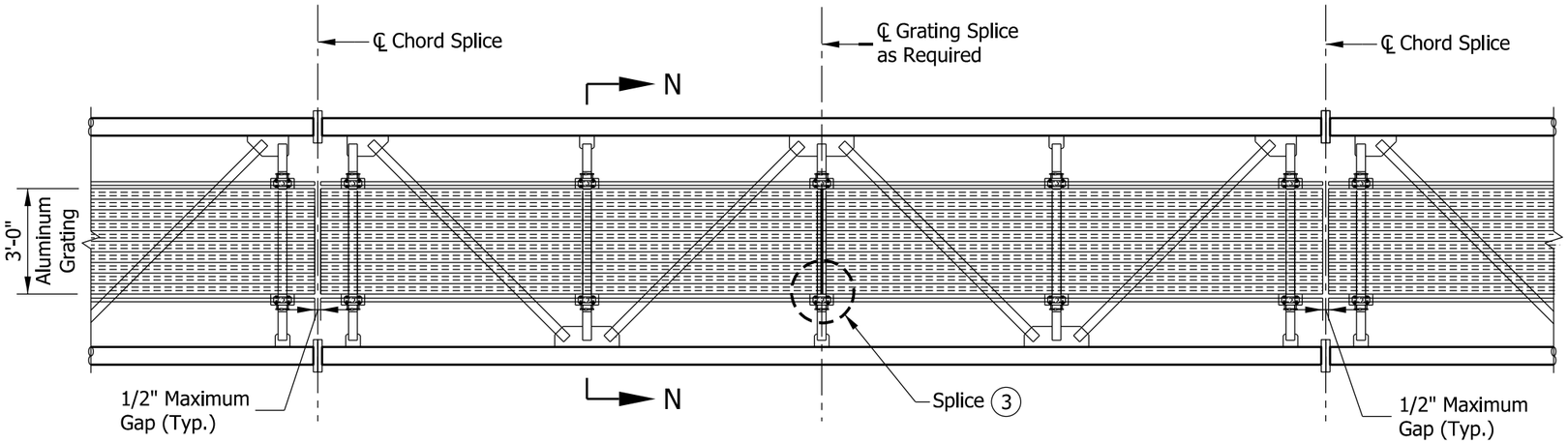

WALKWAY GRATING PLAN

NOTES:

1. Interior walkway gratings shall be extruded I-bars 2" x 1/4" x 1 3/16" center-to-center. Cross bars shall have a maximum gap of 4". Moment of Inertia, I_x = 1.382 in^4. A different grating of equal strength may be used upon approval.

(2) Walkway grating width is nominal and may vary ±1/2" based on available standard widths.

(3) Interior walkway gratings can be spliced on center of any horizontal truss member as needed. See Standard Drawing E 802-SBTS-15 for typical interior walkway grating splice detail.

4. Interior walkway grating shall run the full length, center-to-center, of end-support truss members plus 9" at each end.

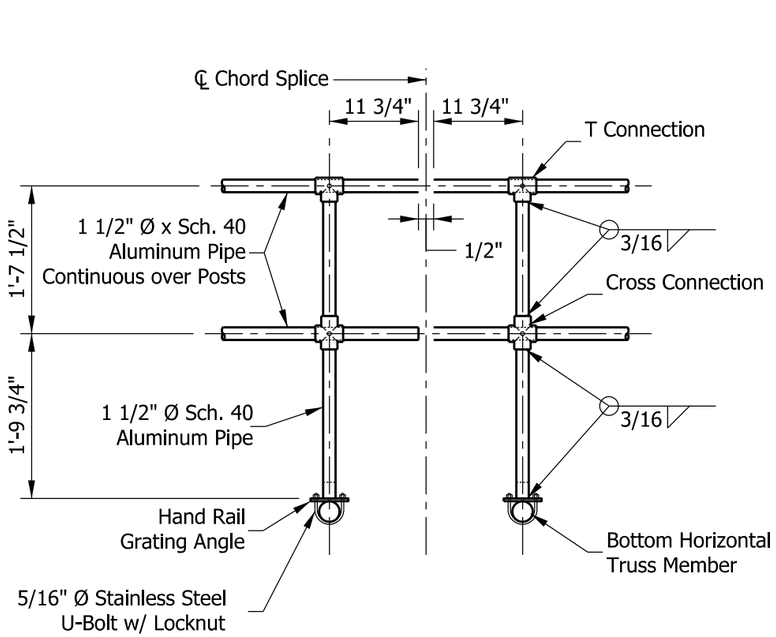

TYPICAL HANDRAIL DETAIL

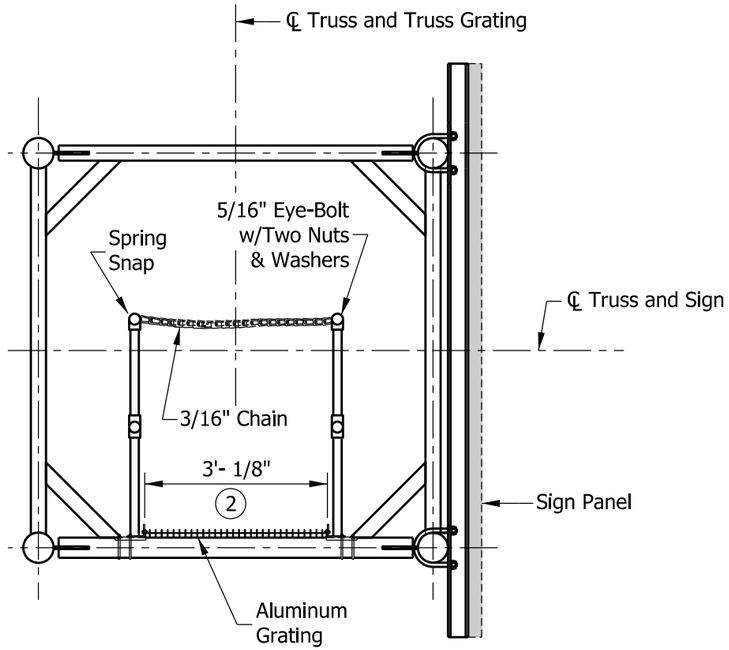

SECTION N-N

INDIANA DEPARTMENT OF TRANSPORTATION

SIGN BOX TRUSS STRUCTURE
INTERIOR WALKWAY GRATING DETAILS

SEPTEMBER 2013

STANDARD DRAWING NO. E 802-SBTS-14

ALFREDO B. HANZA
REGISTERED
No.
60020657
STATE OF
INDIANA
PROFESSIONAL ENGINEER

/s/ Alfredo B. Hanza 02/05/13
DESIGN STANDARDS ENGINEER DATE

/s/ Mark A. Miller 03/27/13
CHIEF ENGINEER DATE

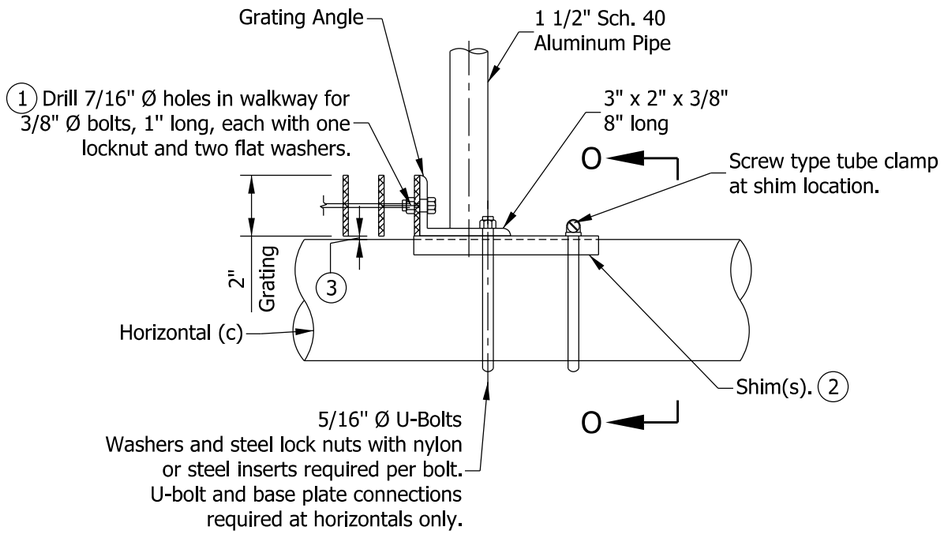

GRATNG SUPPORT DETAIL

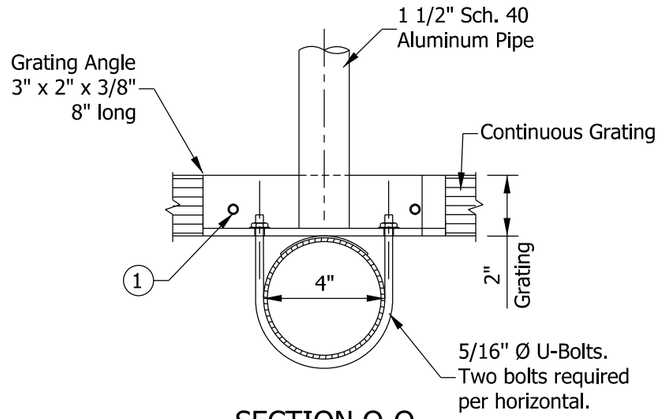

SECTION O-O

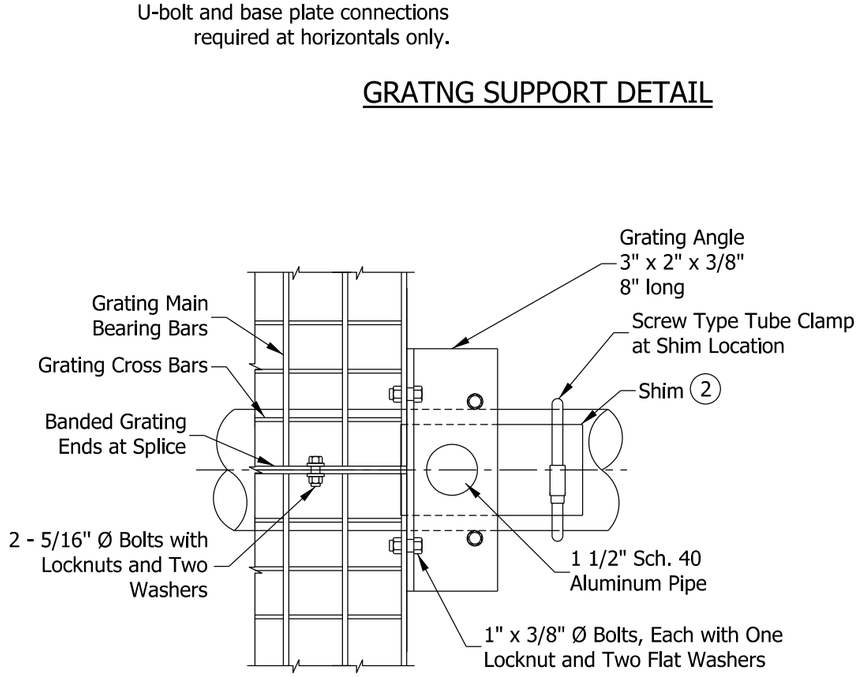

GRATING SPLICE DETAIL

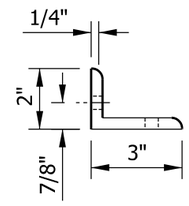

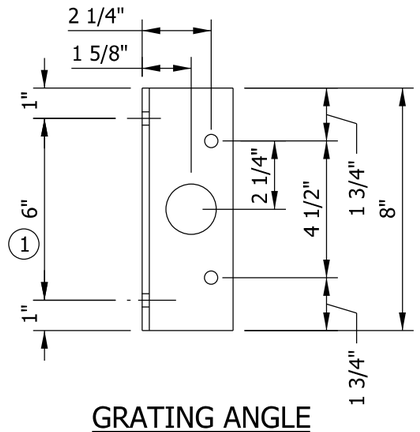

GRATING ANGLE

NOTES:

1. Drilling of holes in grating may be done in shop or field, based on Contractor's preference and subject to accurate alignment.
2. Shims may be placed as shown, if needed to compensate for alignment variations between horizontal and diagonal pipes beyond adjustment provided by angles. Thicker shims may be used subject to shims performing properly.
3. Tube-to-grating gap may vary from 0 to 1/2" max. to align walkway, allow for camber.

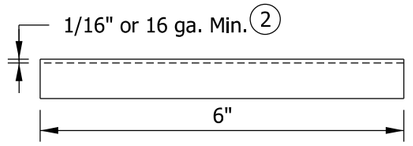

ELEVATION

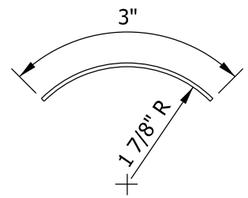

END VIEW

SHIM DETAIL

INDIANA DEPARTMENT OF TRANSPORTATION

SIGN BOX TRUSS STRUCTURE
INTERIOR WALKWAY GRATING DETAILS

SEPTEMBER 2013

STANDARD DRAWING NO. E 802-SBTS-15

ALFREDO B. HANZA
REGISTERED
No.
60020657
STATE OF
INDIANA
PROFESSIONAL ENGINEER

/s/ Alfredo B. Hanza 02/05/13
DESIGN STANDARDS ENGINEER DATE

/s/ Mark A. Miller 03/27/13
CHIEF ENGINEER DATE

NOTES:

1. For location and data for sign panels, see plan details cross section.
2. Signs > 7' in height, bracket spacing 5' max.
   Signs ≤ 7' in height, bracket spacing 7' max.
3. Dimension X depends on the height of the sign. Sign is to be centered vertically on truss.
4. See Standard Drawing E 802-SBTS-17 for Plan, and E 802-SBTS-18 for Section Q-Q.
5. Sign shall be installed on truss with independent brackets WF (A-N) 4 x 3.06. Lighting walkway may be extended to comply with the 9" maximum unsupported grating.

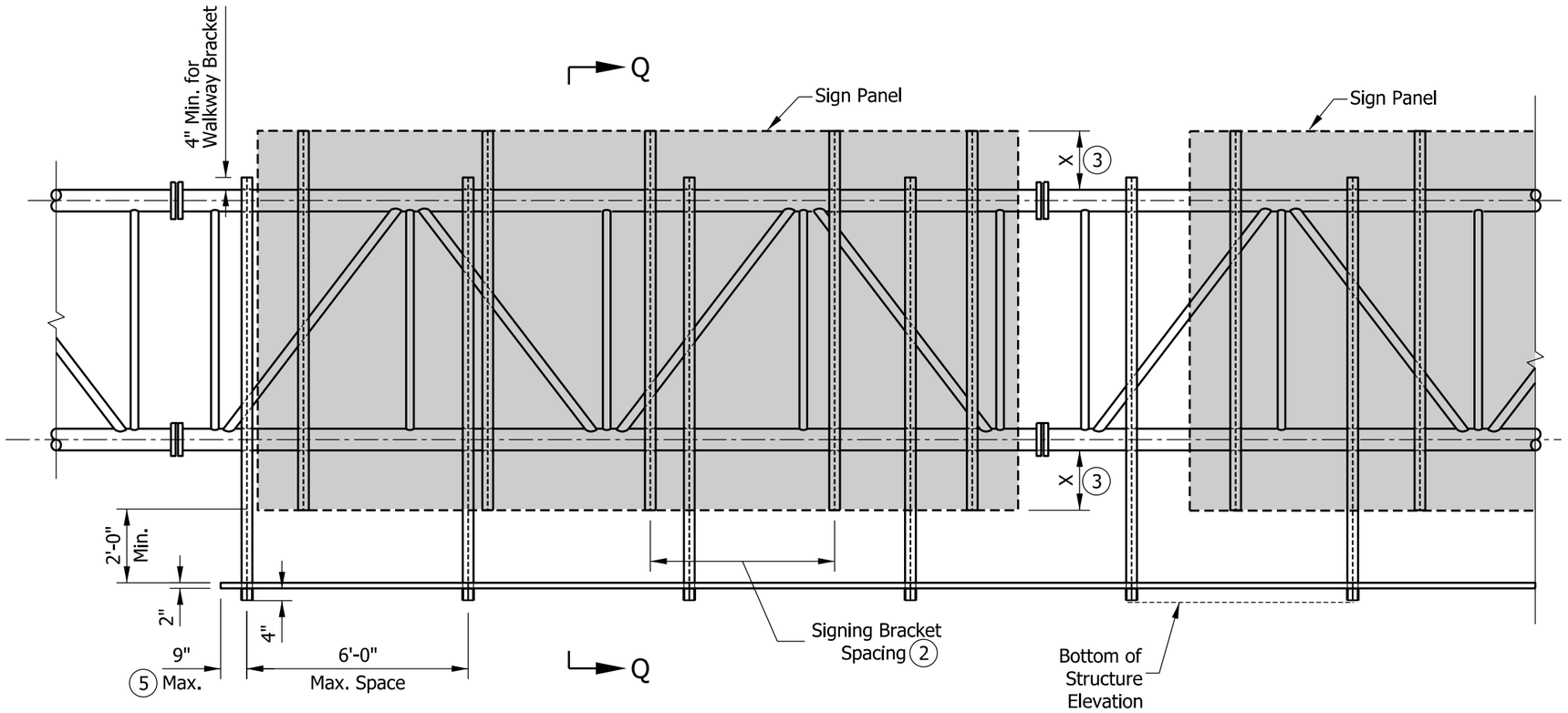

TYPICAL FRONT ELEVATION
(Lights & handrail omitted for clarity)

INDIANA DEPARTMENT OF TRANSPORTATION

SIGN BOX TRUSS STRUCTURE
LIGHTING WALKWAY

SEPTEMBER 2013

STANDARD DRAWING NO. E 802-SBTS-16

ALFREDO B. HANZA
REGISTERED
No. 60020657
STATE OF INDIANA
PROFESSIONAL ENGINEER

/s/ Alfredo B. Hanza 02/05/13
DESIGN STANDARDS ENGINEER DATE

/s/ Mark A. Miller 03/27/13
CHIEF ENGINEER DATE

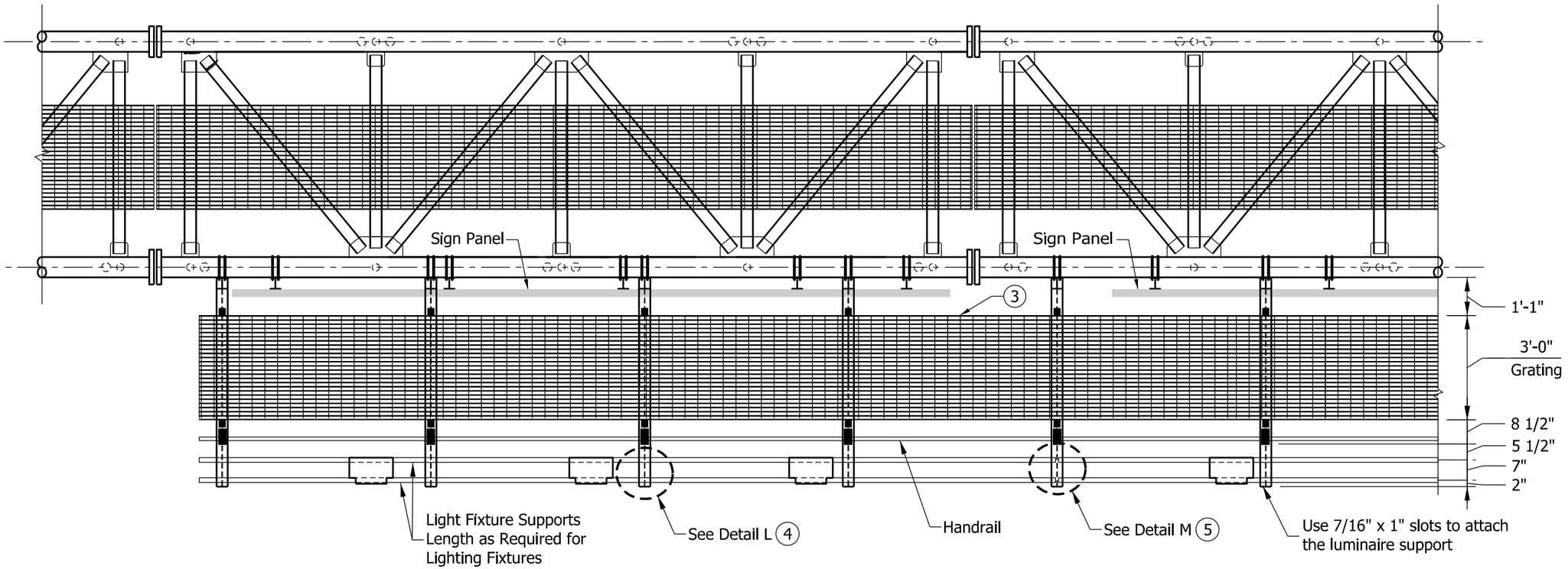

PLAN

NOTES:

1. Handrail and grating shall span a minimum of 3 brackets.

2. Grating splice located on center of L-bracket only. See Standard Drawing E 802-SBTS-21, Detail M.

(3) Lighting walkway gratings are extruded I-bars 2" x 1/4" spaced at 1 3/16" center-to-center. Cross bars shall have a maximum gap of 4". Moment of Inertia, I_x = 1.382 in^4. A different grating of equal strength may be used upon approval.

(4) See Standard Drawing E 802-SBTS-21, Detail L.

(5) See Standard Drawing E 802-SBTS-21, Detail M.

INDIANA DEPARTMENT OF TRANSPORTATION

SIGN BOX TRUSS STRUCTURE
LIGHTING WALKWAY

SEPTEMBER 2013

STANDARD DRAWING NO. E 802-SBTS-17

ALFREDO B. HANZA
REGISTERED
No.
60020657
STATE OF
INDIANA
PROFESSIONAL ENGINEER

/s/ Alfredo B. Hanza 02/05/13
DESIGN STANDARDS ENGINEER DATE

/s/ Mark A. Miller 03/27/13
CHIEF ENGINEER DATE

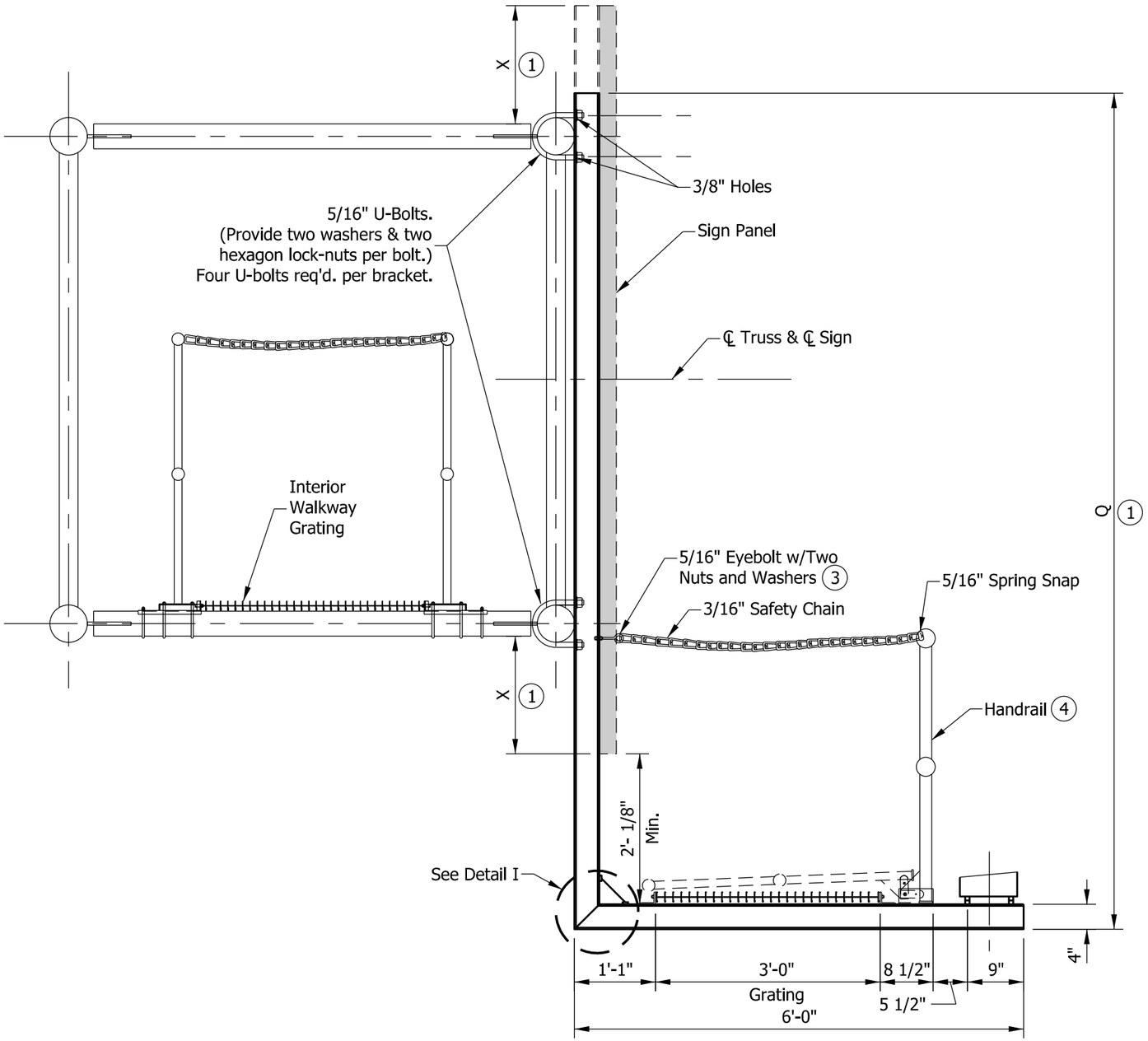

SECTION Q-Q

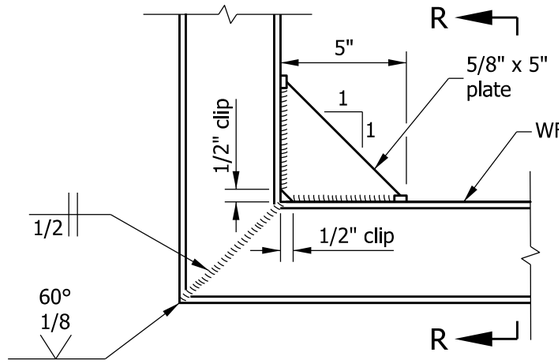

DETAIL I

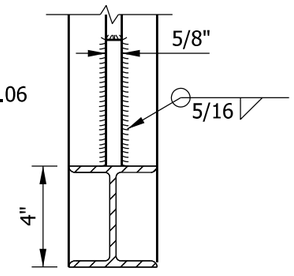

SECTION R-R

NOTES:

1. Dimensions X and Q to be determined by Contractor to fit signs.
2. Sign panel shall be placed symmetrically about centerline of truss.
3. (3) Eyebolt shall be attached to web of bracket at approximate elevation of upper handrail pipe.
4. (4) See Standard Drawing E 802-SBTS-19 for handrail details.

INDIANA DEPARTMENT OF TRANSPORTATION

SIGN BOX TRUSS STRUCTURE
LIGHTING WALKWAY PROFILE

SEPTEMBER 2013

STANDARD DRAWING NO. E 802-SBTS-18

ALFREDO B. HANZA
REGISTERED
No.
60020657
STATE OF
INDIANA
PROFESSIONAL ENGINEER

/s/ Alfredo B. Hanza 02/05/13
DESIGN STANDARDS ENGINEER DATE

/s/ Mark A. Miller 03/27/13
CHIEF ENGINEER DATE

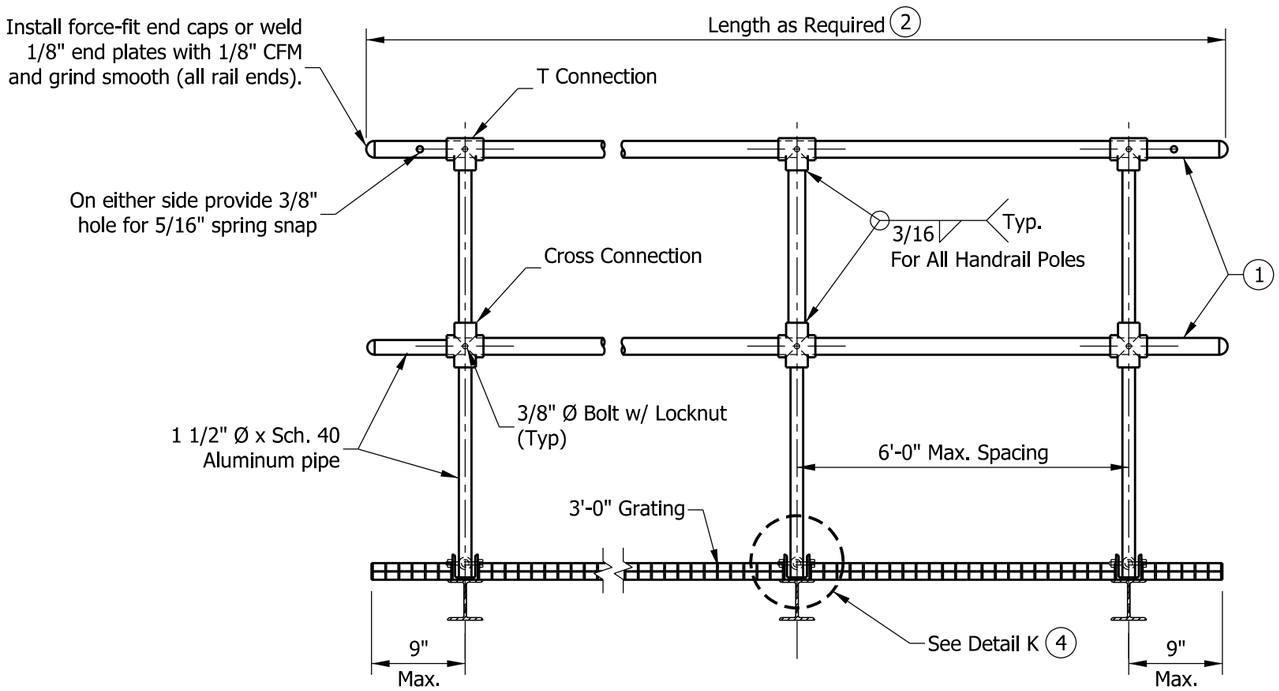

FRONT ELEVATION

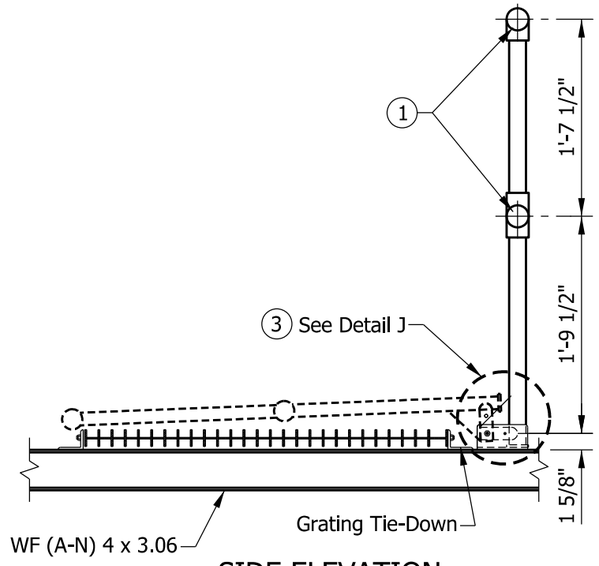

SIDE ELEVATION

NOTES:

(1) Horizontal rail member shall be continuous through fitting. Manufacturer shall provide 7/16" holes for fitting 3/8" bolt. Field drill 7/16" hole in horizontal rail member. Attach handrail with 3/8" bolt, washer, and locknut.

(2) Rail and grating shall span a minimum of three brackets.

(3) See Standard Drawing E 802-SBTS-20 for Detail J.

(4) See Standard Drawing E 802-SBTS-20 for Detail K.

INDIANA DEPARTMENT OF TRANSPORTATION

SIGN BOX TRUSS STRUCTURE
LIGHTING WALKWAY AND
HANDRAIL ASSEMBLY

SEPTEMBER 2013

STANDARD DRAWING NO. E 802-SBTS-19

ALFREDO B. HANZA
REGISTERED
No. 60020657
STATE OF INDIANA
PROFESSIONAL ENGINEER

/s/ Alfredo B. Hanza 02/05/13
DESIGN STANDARDS ENGINEER DATE

/s/ Mark A. Miller 03/27/13
CHIEF ENGINEER DATE

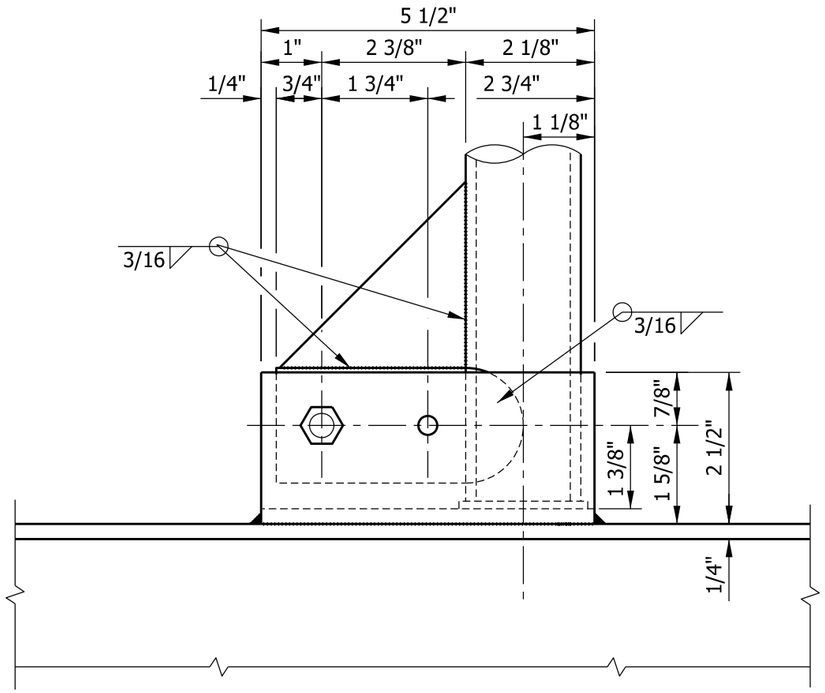

DETAIL J
SIDE ELEVATION

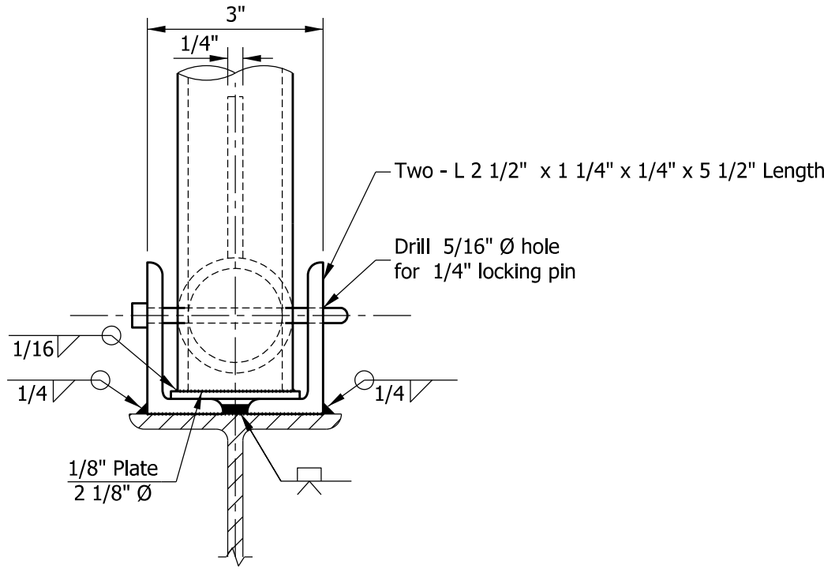

DETAIL K
FRONT ELEVATION

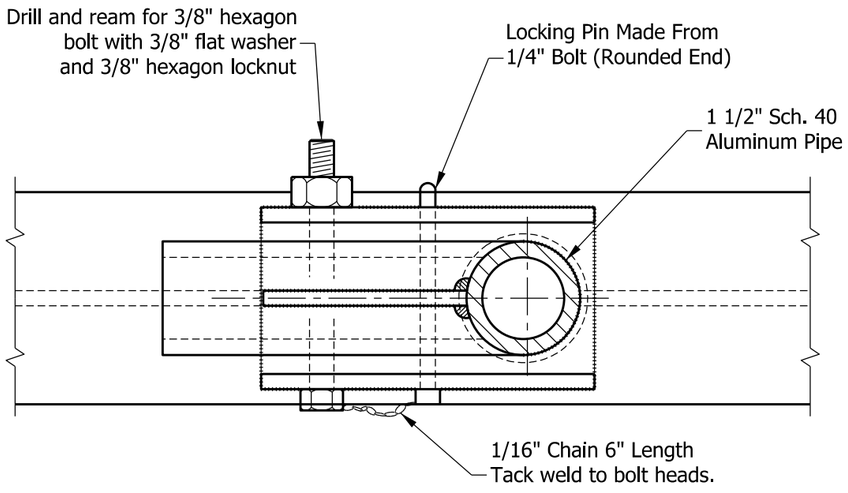

PLAN
DETAILS OF HANDRAIL HINGE

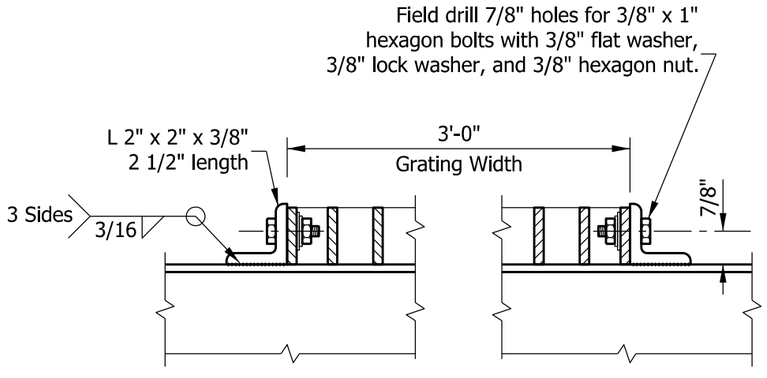

GRATING TIE DOWN
(Two req'd per walkway bracket)

INDIANA DEPARTMENT OF TRANSPORTATION

SIGN BOX TRUSS STRUCTURE
LIGHTING WALKWAY, HANDRAIL HINGE, AND GRATING DETAILS
SEPTEMBER 2013

STANDARD DRAWING NO. E 802-SBTS-20

ALFREDO B. HANZA
REGISTERED
No. 60020657
STATE OF INDIANA
PROFESSIONAL ENGINEER

/s/ Alfredo B. Hanza 03/26/13
DESIGN STANDARDS ENGINEER DATE

/s/ Mark A. Miller 03/27/13
CHIEF ENGINEER DATE

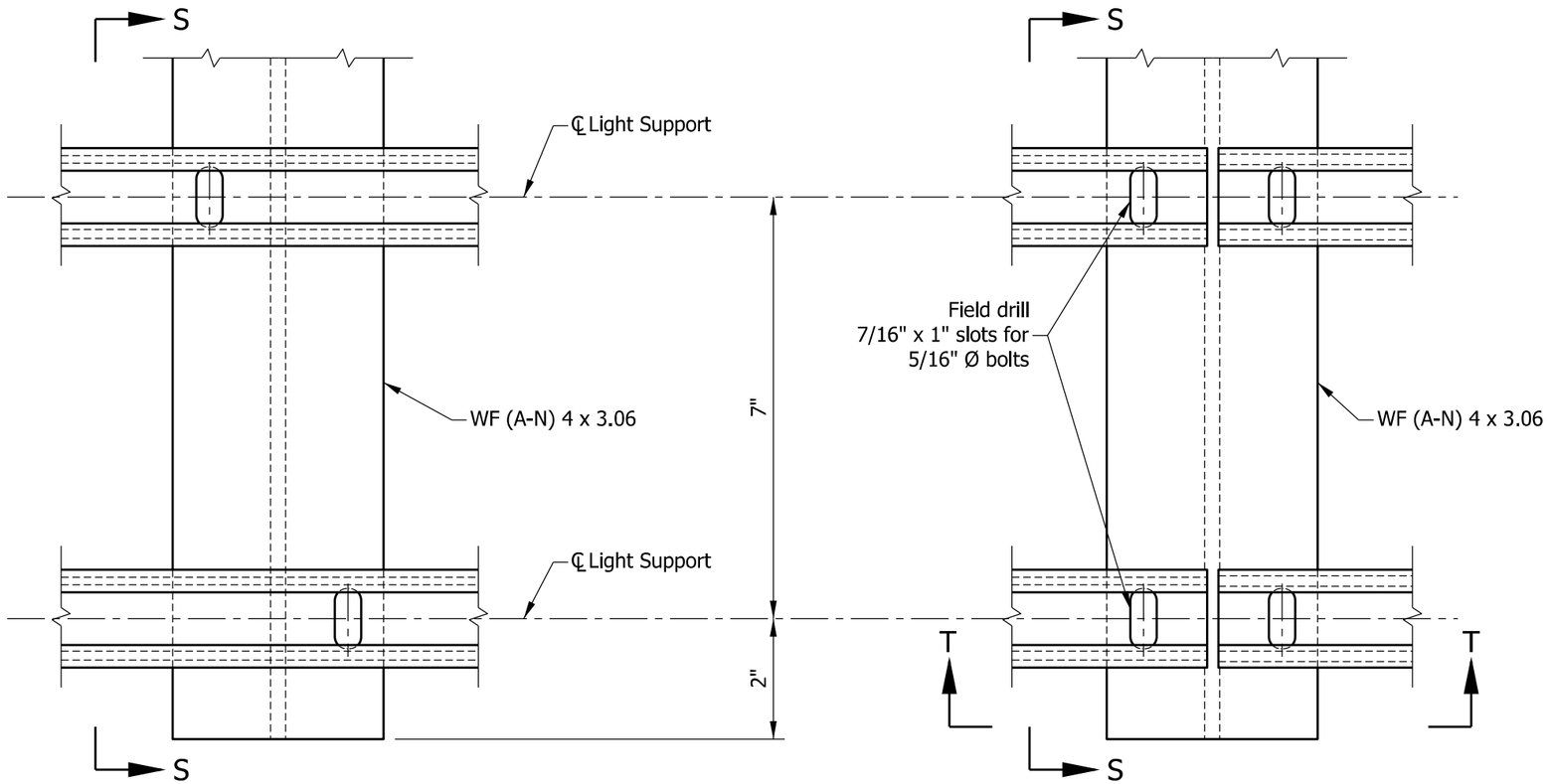

DETAIL L

DETAIL M

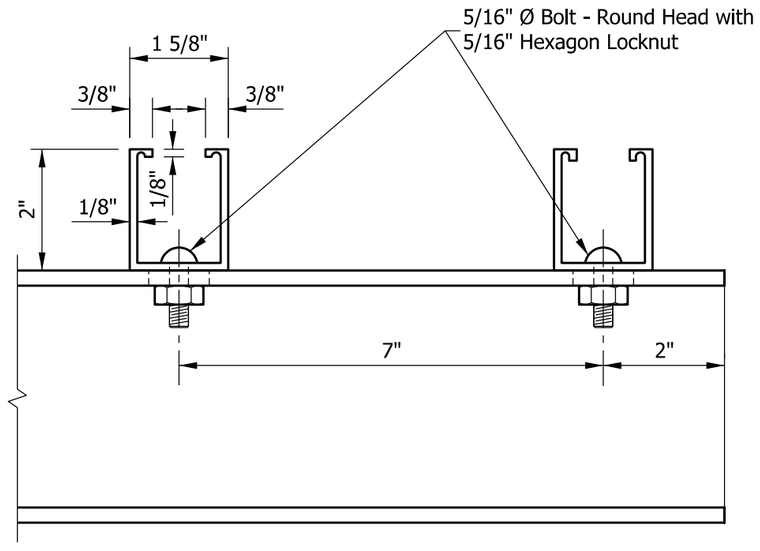

SECTION S-S

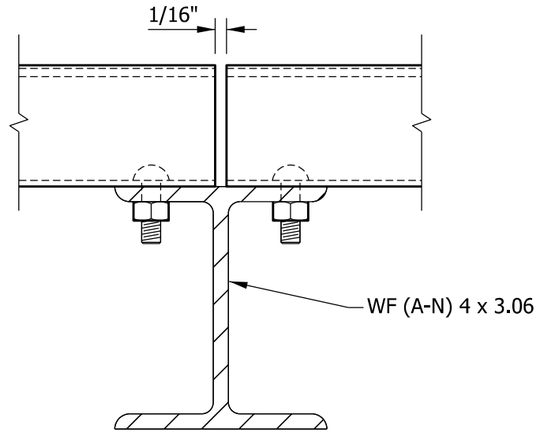

SECTION T-T

INDIANA DEPARTMENT OF TRANSPORTATION

SIGN BOX TRUSS STRUCTURE
LIGHTING WALKWAY
FIXTURE MOUNT DETAILS
SEPTEMBER 2013

STANDARD DRAWING NO. E 802-SBTS-21

ALFREDO B. HANZA
REGISTERED
No.
60020657
STATE OF
INDIANA
PROFESSIONAL ENGINEER

/s/ Alfredo B. Hanza 02/05/13
DESIGN STANDARDS ENGINEER DATE

/s/ Mark A. Miller 03/27/13
CHIEF ENGINEER DATE

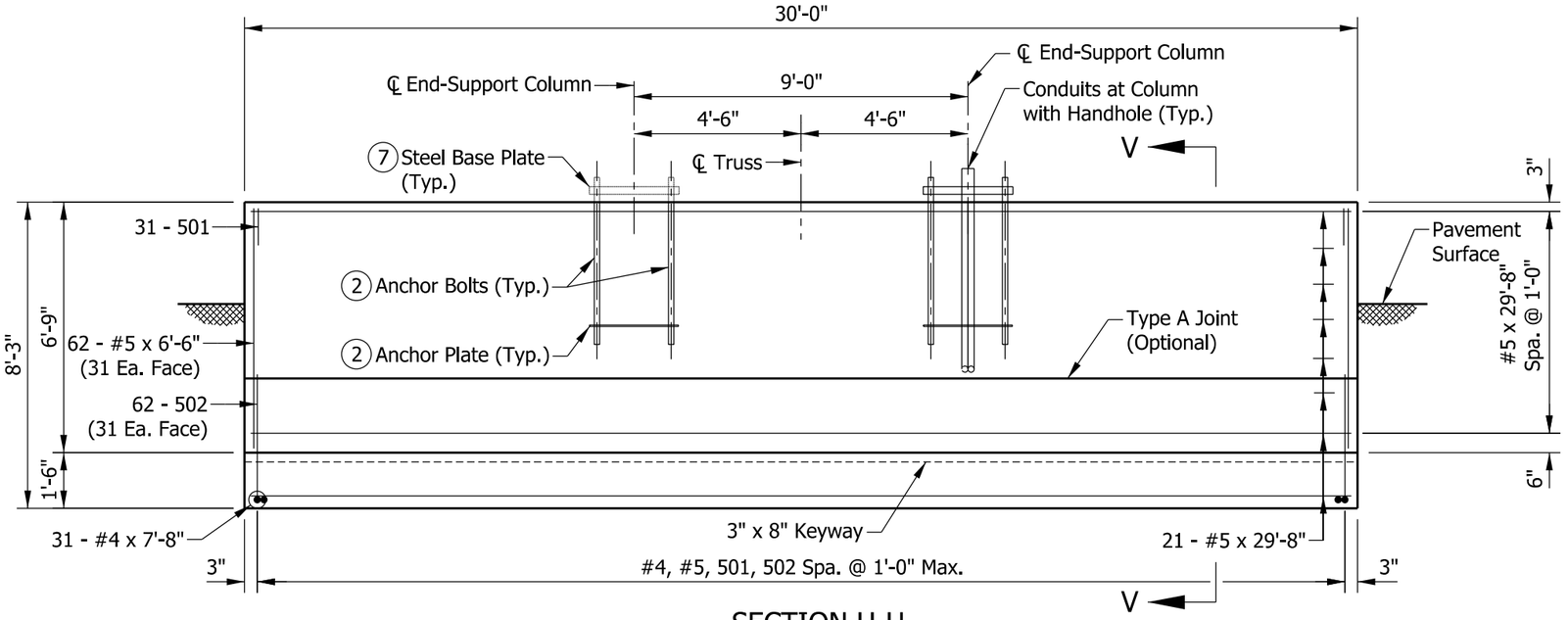

SECTION U-U

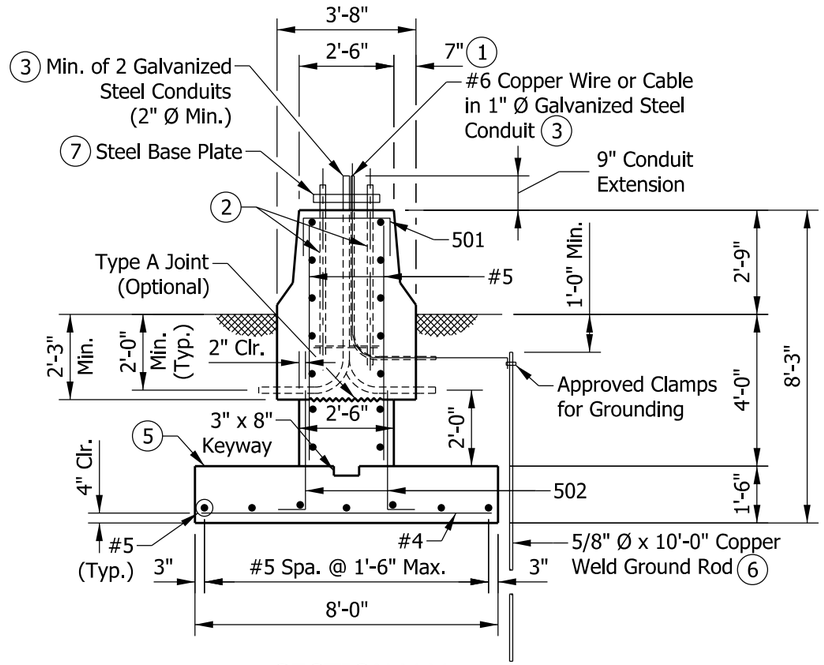

SECTION V-V

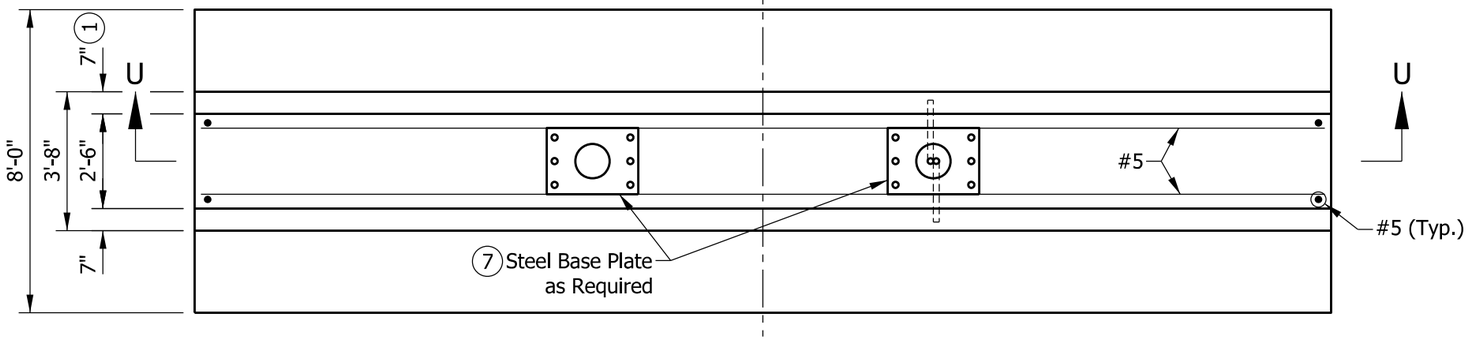

PLAN

NOTES:

1. See Standard Drawing E 602-CCMB-03 for barrier wall width transition.
2. See Standard Drawing E 802-SBTS-13 for anchor bolt and anchor plate details.
3. Thread and cap both ends of steel conduit.
4. See Standard Drawing E 802-SBTS-25 for quantities.
5. Top of the footing shall be a minimum of 4'-0" below the pavement or ground surface.
6. Only one ground rod per structure is required.
7. See Standard Drawing E 802-SBTS-11 for base plate detail.

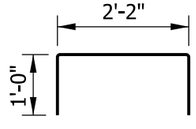

501 x 4'-2"

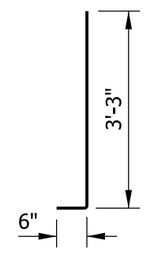

502 x 3'-9"

INDIANA DEPARTMENT OF TRANSPORTATION

SIGN BOX TRUSS STRUCTURE
SPREAD FOUNDATION
AT 33" CONCRETE BARRIER WALL
SEPTEMBER 2013

STANDARD DRAWING NO. E 802-SBTS-22

ALFREDO B. HANZA REGISTERED No. 60020657 STATE OF INDIANA PROFESSIONAL ENGINEER

/s/ Alfredo B. Hanza 02/05/13
DESIGN STANDARDS ENGINEER DATE

/s/ Mark A. Miller 03/27/13
CHIEF ENGINEER DATE

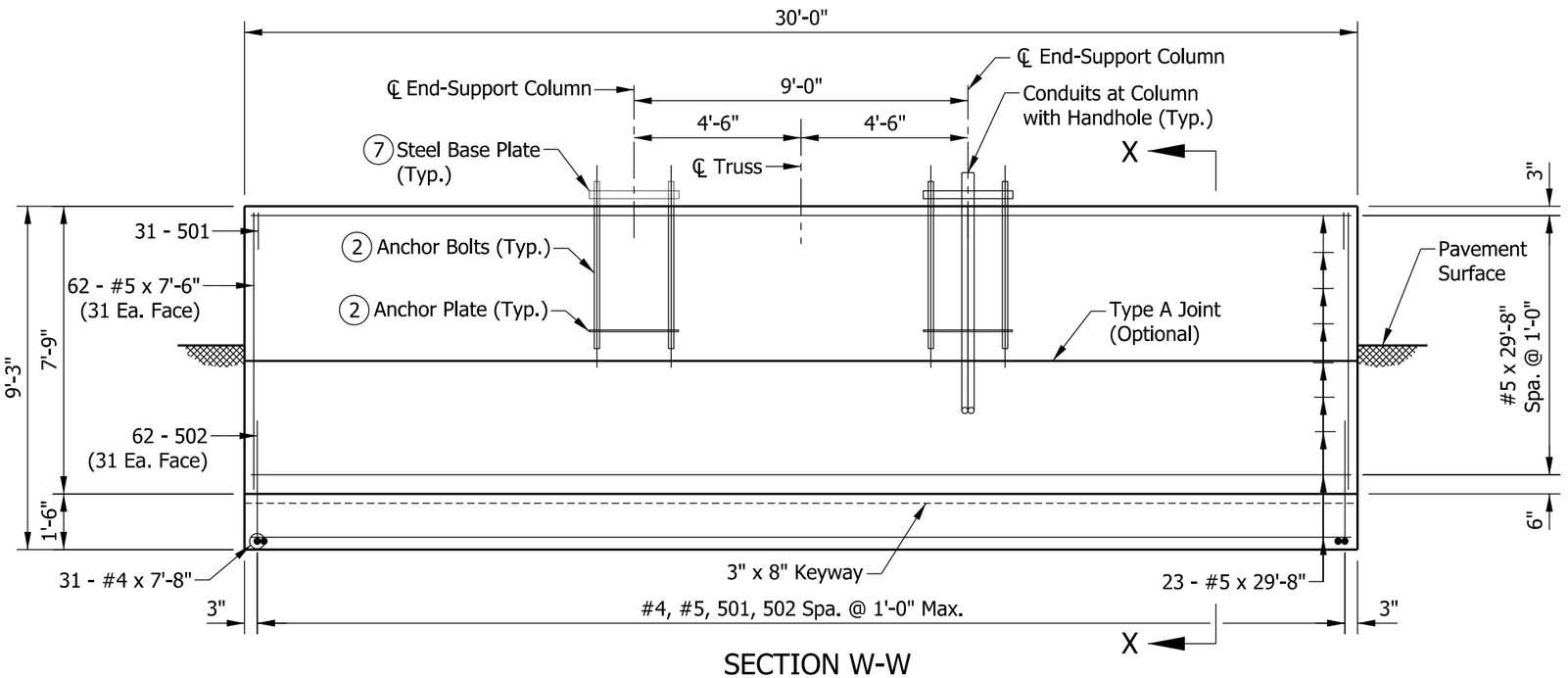

SECTION W-W

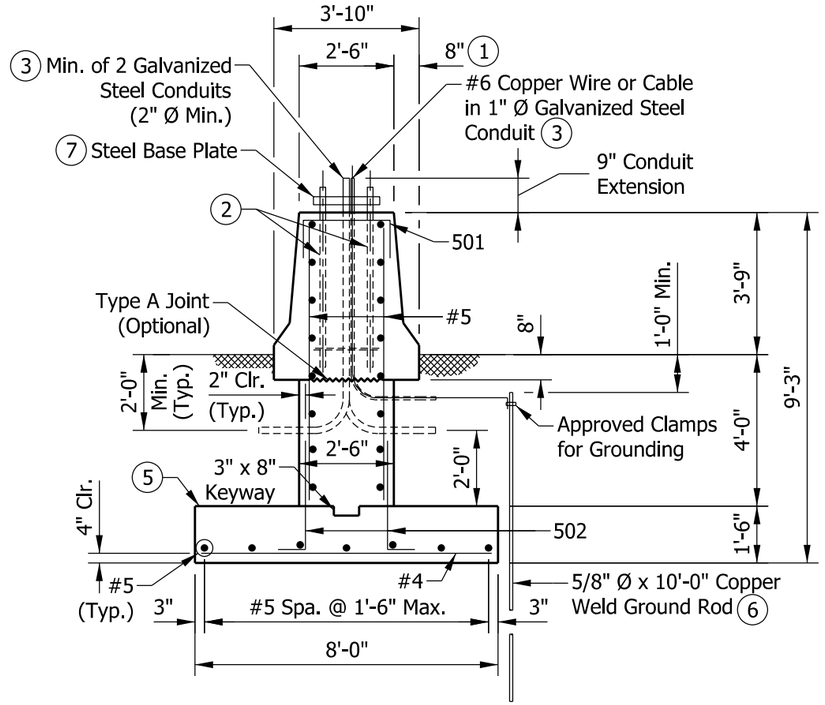

SECTION X-X

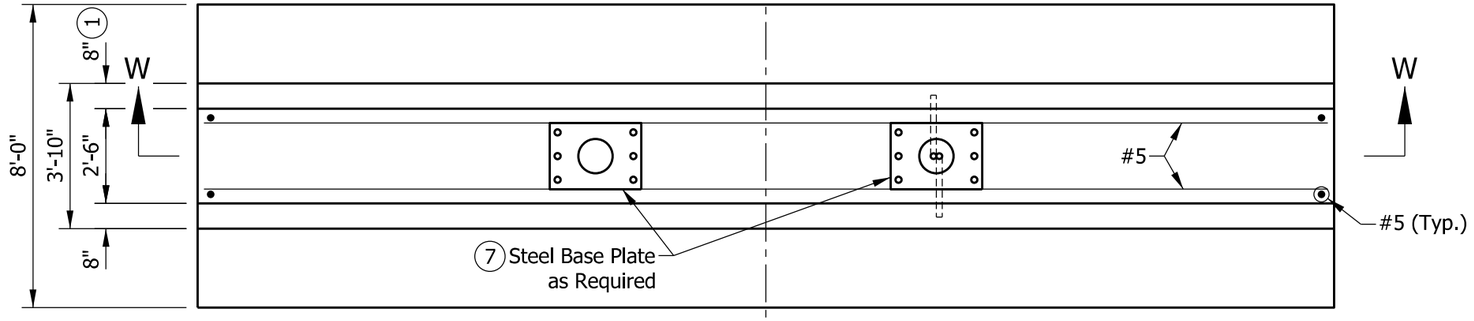

PLAN

NOTES:

1. See Standard Drawing E 602-CCMB-03 for barrier wall width transition.
2. See Standard Drawing E 802-SBTS-13 for anchor bolt and anchor plate details.
3. Thread and cap both ends of steel conduit.
4. See Standard Drawing E 802-SBTS-25 for quantities.
5. Top of the footing shall be a minimum of 4'-0" below the pavement or ground surface.
6. Only one ground rod per structure is required.
7. See Standard Drawing E 802-SBTS-11 for base plate details.

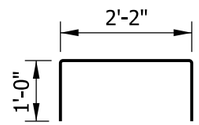

501 x 4'-2"

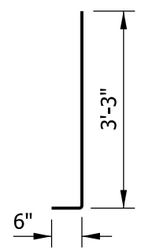

502 x 3'-9"

INDIANA DEPARTMENT OF TRANSPORTATION

SIGN BOX TRUSS STRUCTURE
SPREAD FOUNDATION
AT 45" CONCRETE BARRIER WALL
SEPTEMBER 2013

STANDARD DRAWING NO. E 802-SBTS-23

ALFREDO B. HANZA REGISTERED No. 60020657 STATE OF INDIANA PROFESSIONAL ENGINEER

/s/ Alfredo B. Hanza 02/05/13
DESIGN STANDARDS ENGINEER DATE

/s/ Mark A. Miller 03/27/13
CHIEF ENGINEER DATE

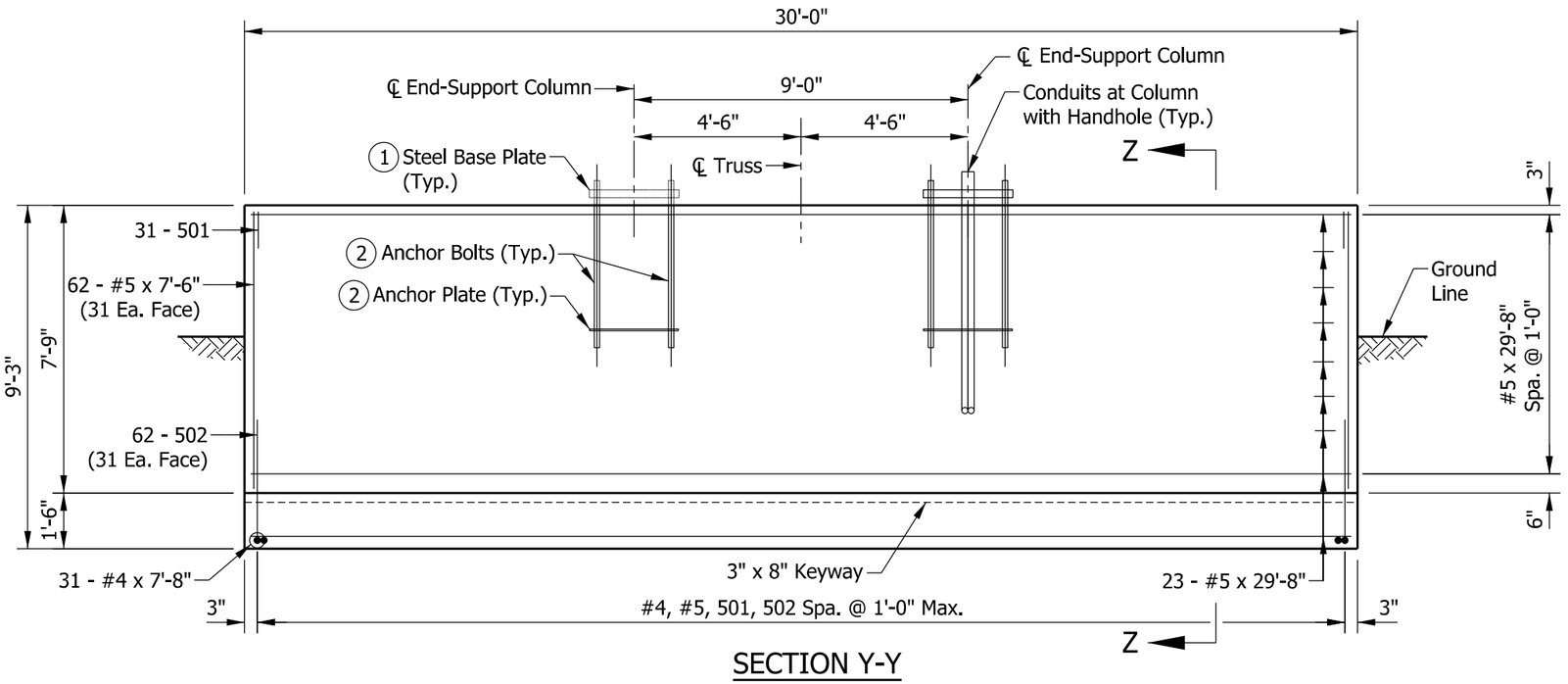

SECTION Y-Y

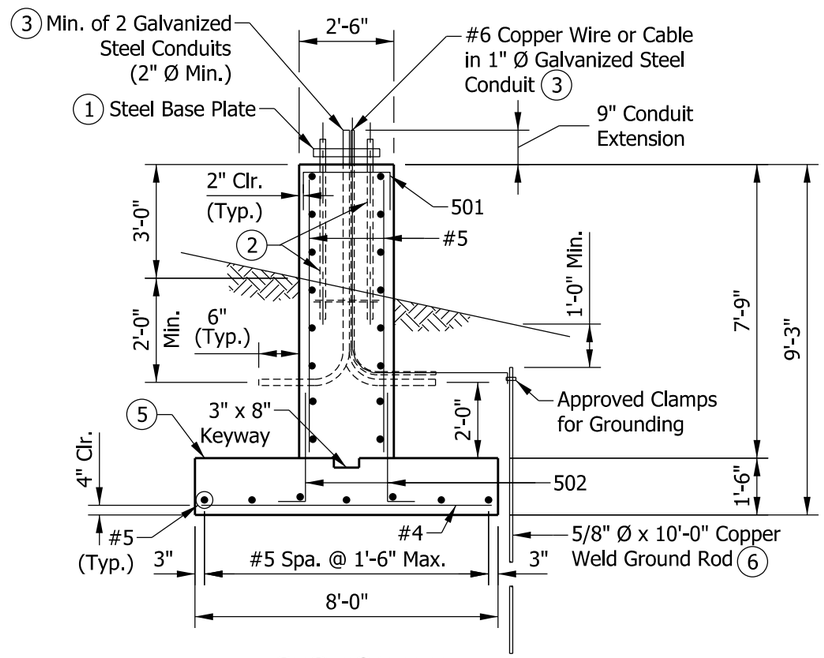

SECTION Z-Z

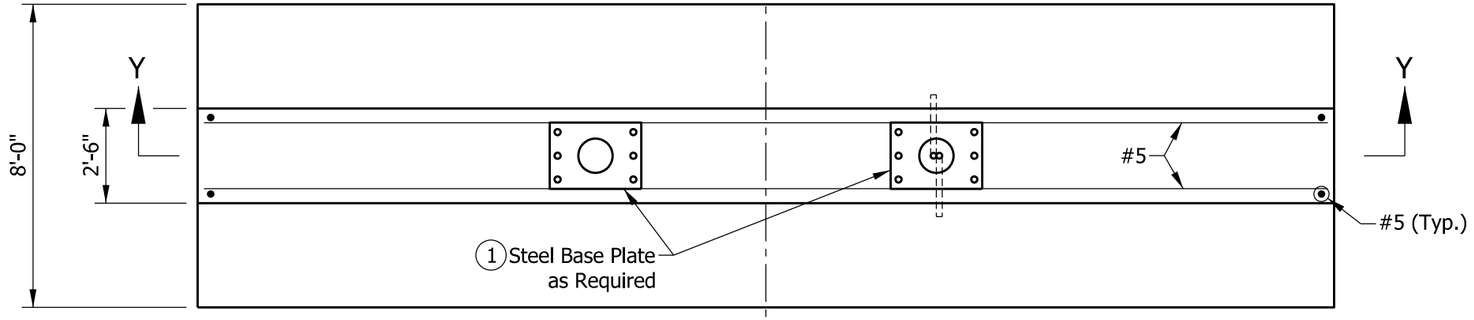

PLAN

NOTES:

1. See Standard Drawing E 802-SBTS-11 for base plate details.
2. See Standard Drawing E 802-SBTS-13 for anchor bolt and anchor plate details.
3. Thread and cap both ends of steel conduit.
4. See Standard Drawing E 802-SBTS-25 for quantities.
5. Top of the footing shall be a minimum of 4'-0" below the pavement or ground surface.
6. Only one ground rod per structure is required.

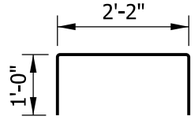

501 x 4'-2"

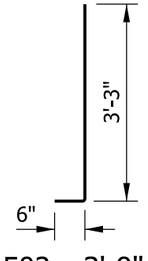

502 x 3'-9"

INDIANA DEPARTMENT OF TRANSPORTATION

SIGN BOX TRUSS STRUCTURE
SPREAD FOUNDATION
FOR MEDIAN OR SHOULDER, 36" HEIGHT
SEPTEMBER 2013

STANDARD DRAWING NO. E 802-SBTS-24

ALFREDO B. HANZA REGISTERED No. 60020657 STATE OF INDIANA PROFESSIONAL ENGINEER

/s/ Alfredo B. Hanza — 02/05/13
DESIGN STANDARDS ENGINEER — DATE

/s/ Mark A. Miller — 03/27/13
CHIEF ENGINEER — DATE

SPREAD FOUNDATION AT 33" CONCRETE BARRIER WALL			
EPOXY-COATED REINFORCING BARS			
MARK OR SIZE	NO. OF BARS	LENGTH	WEIGHT
501	31	4'-2"	
502	62	3'-9"	
#5	62	6'-6"	
#5	21	29'-8"	
Total #5			1447 LBS
#4	31	7'-8"	
Total #4			159 LBS
Total Epoxy-Coated Reinforcing Bars			1606 LBS
CONCRETE, CLASS A			
Total Concrete, Class A			35.8 CYS
MISCELLANEOUS			
Surface Seal			27.6 SYS

SPREAD FOUNDATION AT 45" CONCRETE BARRIER WALL			
EPOXY-COATED REINFORCING BARS			
MARK OR SIZE	NO. OF BARS	LENGTH	WEIGHT
501	31	4'-2"	
502	62	3'-9"	
#5	62	7'-6"	
#5	23	29'-8"	
Total #5			1574 LBS
#4	31	7'-8"	
Total #4			159 LBS
Total Epoxy-Coated Reinforcing Bars			1733 LBS
CONCRETE, CLASS A			
Total Concrete, Class A			37.6 CYS
MISCELLANEOUS			
Surface Seal			34.3 SYS

SPREAD FOUNDATION FOR MEDIAN OR SHOULDER, 36" HEIGHT			
EPOXY-COATED REINFORCING BARS			
MARK OR SIZE	NO. OF BARS	LENGTH	WEIGHT
501	31	4'-2"	
502	62	3'-9"	
#5	62	7'-6"	
#5	23	29'-8"	
Total #5			1574 LBS
#4	31	7'-8"	
Total #4			159 LBS
Total Epoxy-Coated Reinforcing Bars			1733 LBS
CONCRETE, CLASS A			
Total Concrete, Class A			34.9 CYS
MISCELLANEOUS			
Surface Seal			28.3 SYS

INDIANA DEPARTMENT OF TRANSPORTATION

SIGN BOX TRUSS STRUCTURE SPREAD FOUNDATIONS QUANTITIES

SEPTEMBER 2013

STANDARD DRAWING NO. E 802-SBTS-25

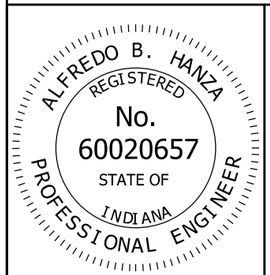

/s/ Alfredo B. Hanza *02/05/13*

DESIGN STANDARDS ENGINEER DATE

/s/ Mark A. Miller *03/27/13*

CHIEF ENGINEER DATE

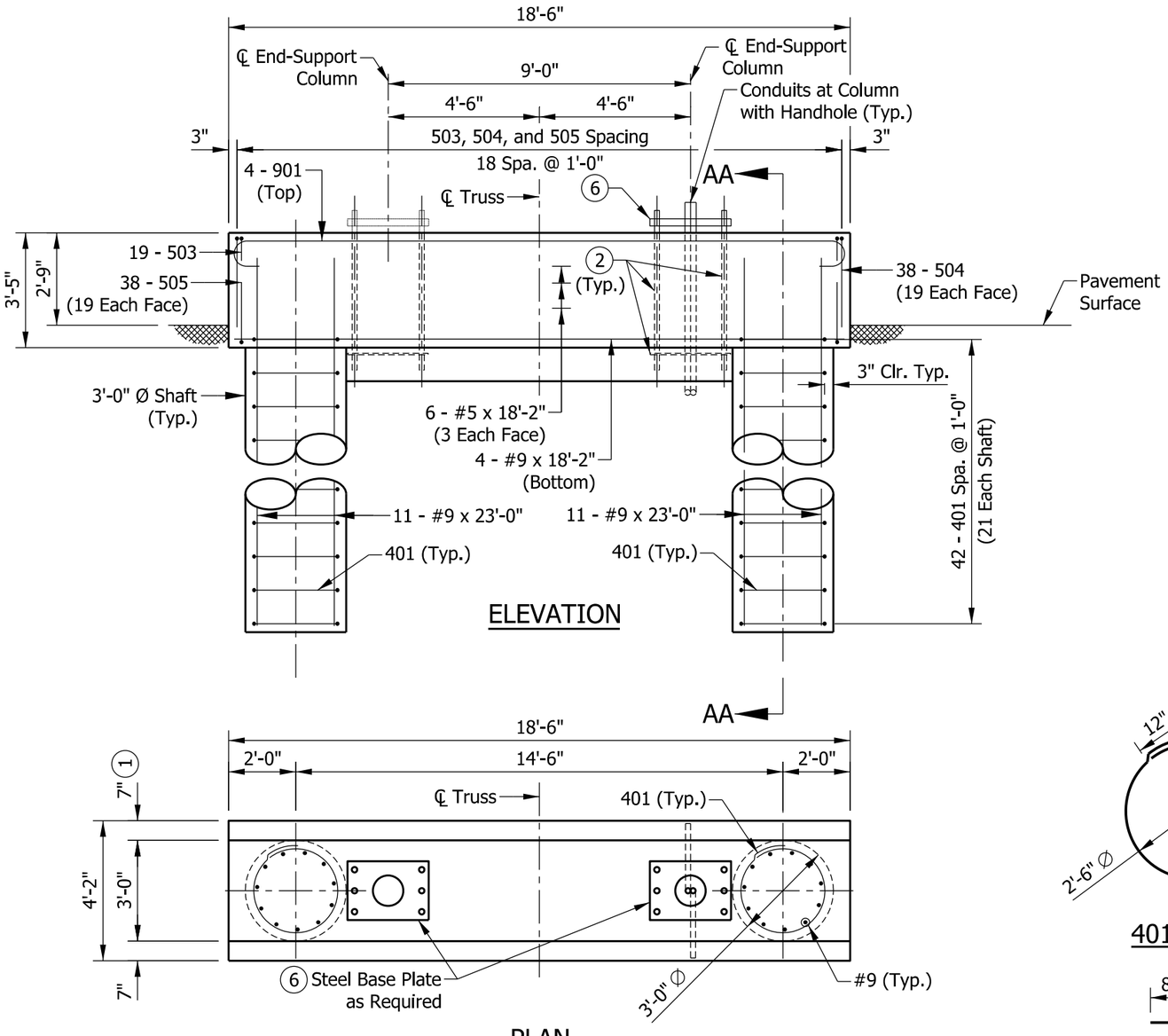

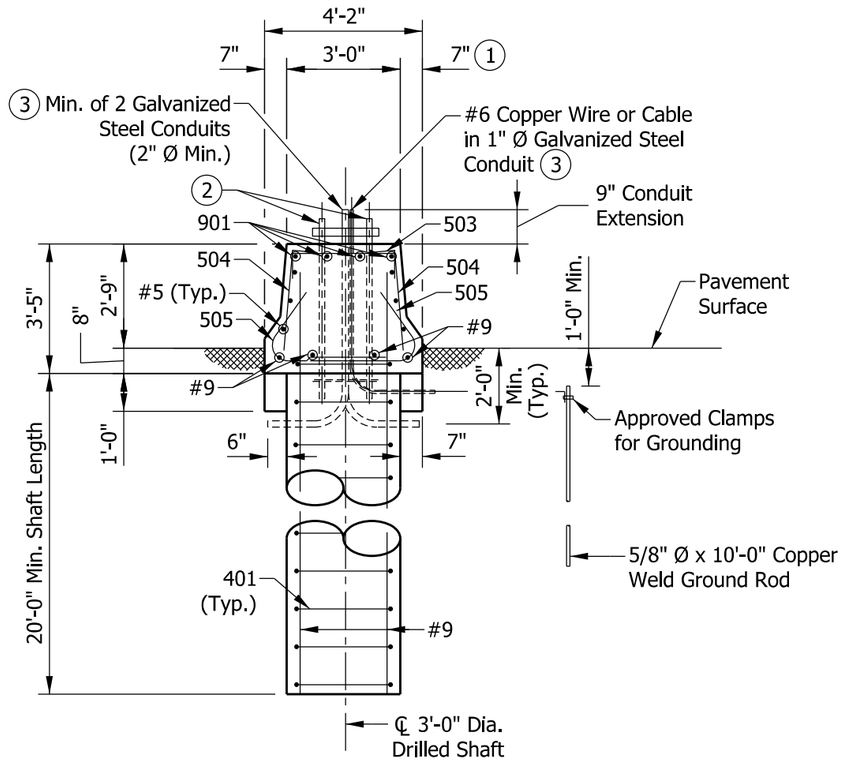

SECTION AA-AA

401 x 8'-10"

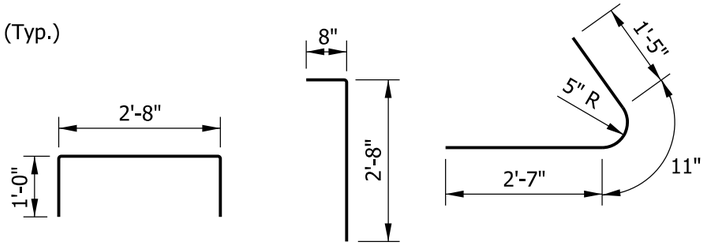

NOTES:

1. See Standard Drawing E 602-CCMB-03 for barrier wall width transition.
2. See Standard Drawing E 802-SBTS-13 for anchor bolt and anchor plate details.
3. Thread and cap both ends of steel conduit.
4. See Standard Drawing E 802-SBTS-29 for quantities.
5. See Standard Drawing E 703-BRST-01 for reinforcing-bar bending details and notes.
6. See Standard Drawing E 802-SBTS-11 for base plate details.

INDIANA DEPARTMENT OF TRANSPORTATION

SIGN BOX TRUSS STRUCTURE ALTERNATE DRILLED SHAFT FOUNDATION AT 33" CONCRETE BARRIER WALL

SEPTEMBER 2013

STANDARD DRAWING NO. E 802-SBTS-26

ALFREDO B. HANZA REGISTERED No. 60020657 STATE OF INDIANA PROFESSIONAL ENGINEER

/s/ Alfredo B. Hanza — 02/05/13
DESIGN STANDARDS ENGINEER — DATE

/s/ Mark A. Miller — 03/27/13
CHIEF ENGINEER — DATE

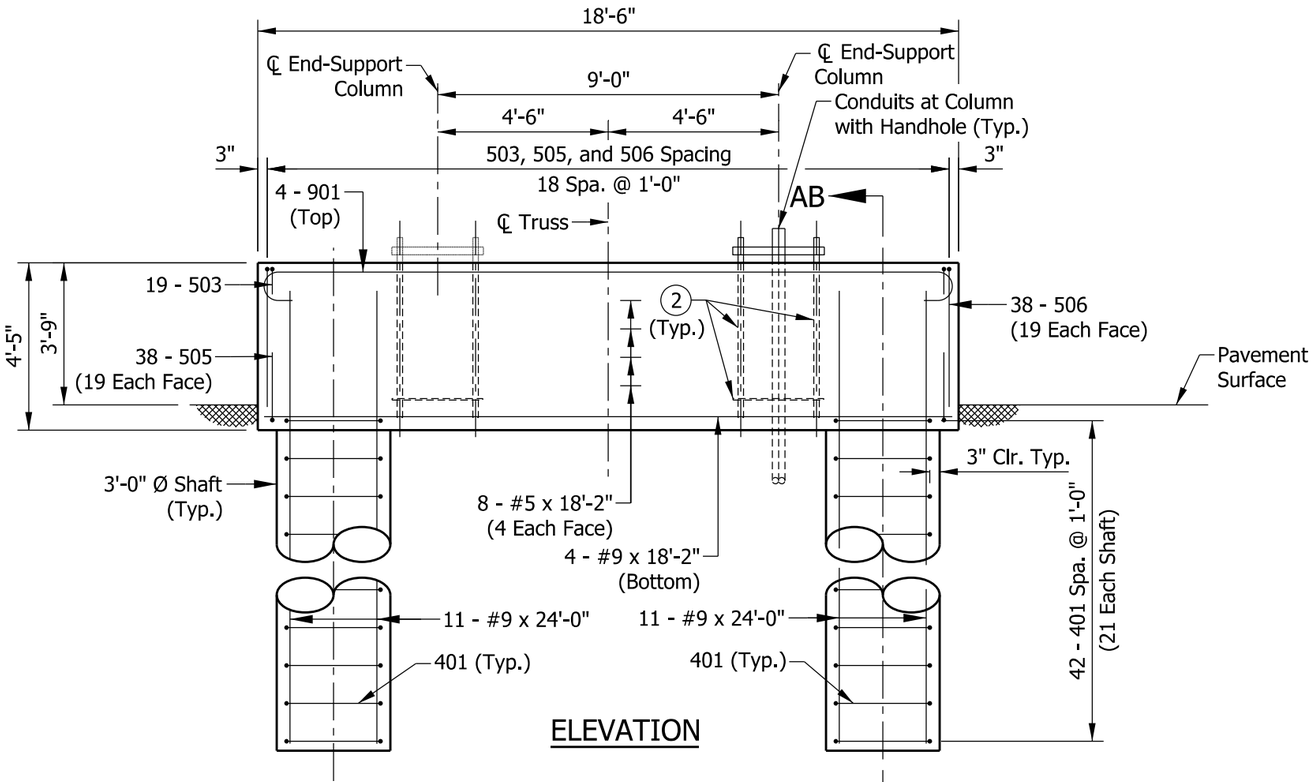

ELEVATION

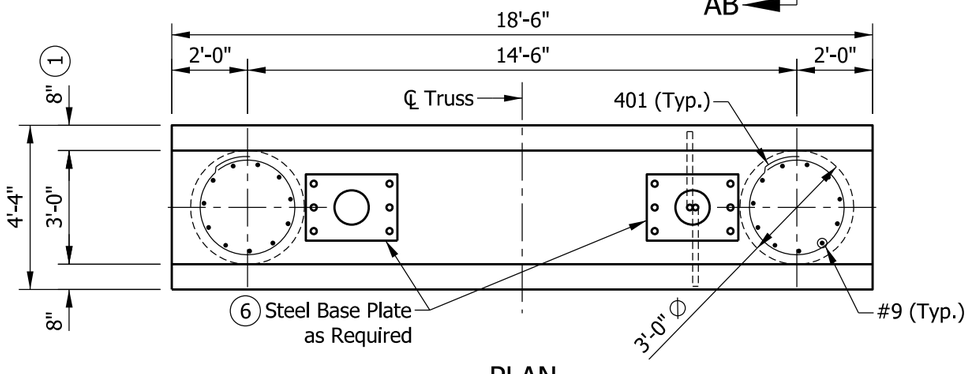

PLAN

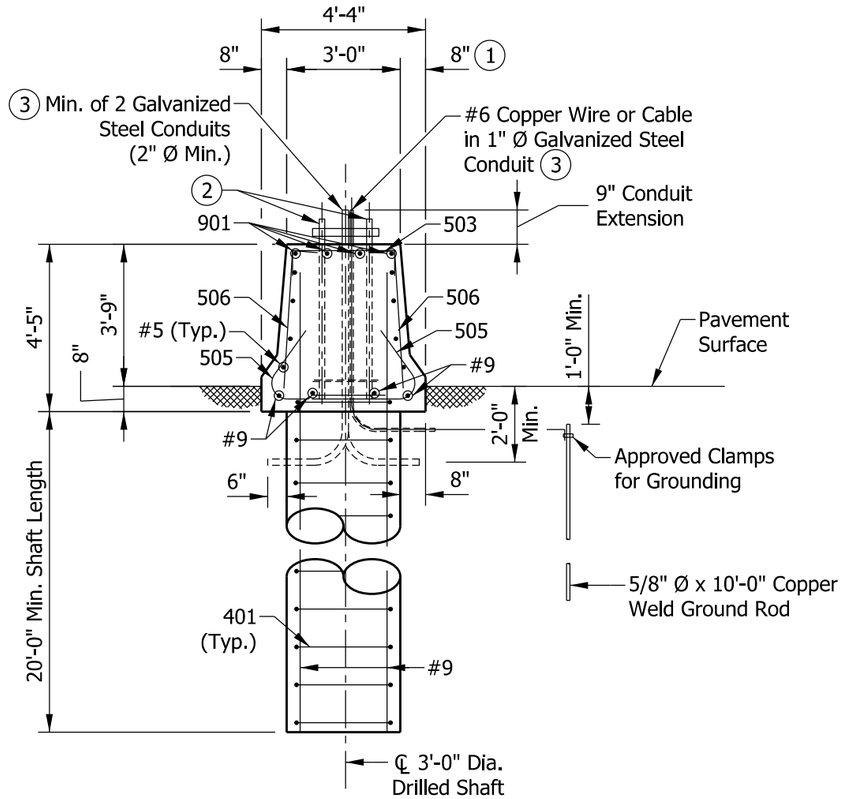

SECTION AB-AB

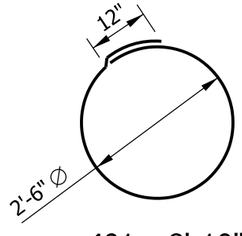

401 x 8'-10"

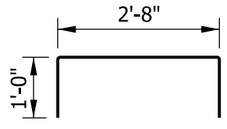

503 x 4'-8"

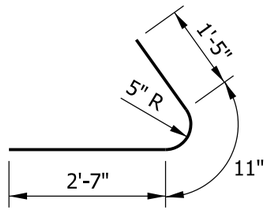

505 x 4'-11"

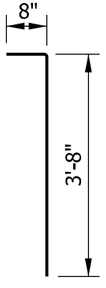

506 x 4'-4"

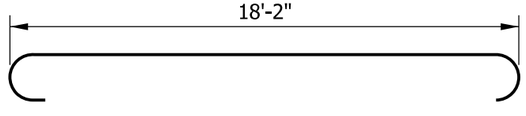

901 x 20'-8"

NOTES:

1. See Standard Drawing E 602-CCMB-03 for barrier wall width transition.
2. See Standard Drawing E 802-SBTS-13 for anchor bolt and anchor plate details.
3. Thread and cap both ends of steel conduit.
4. See Standard Drawing E 802-SBTS-29 for quantities.
5. See Standard Drawing E 703-BRST-01 for reinforcing-bar bending details and notes.
6. See Standard Drawing E 802-SBTS-11 for base plate details.

INDIANA DEPARTMENT OF TRANSPORTATION

SIGN BOX TRUSS STRUCTURE ALTERNATE DRILLED SHAFT FOUNDATION AT 45" CONCRETE BARRIER WALL

SEPTEMBER 2013

STANDARD DRAWING NO. E 802-SBTS-27

ALFREDO B. HANZA REGISTERED No. 60020657 STATE OF INDIANA PROFESSIONAL ENGINEER

/s/ Alfredo B. Hanza 02/05/13
DESIGN STANDARDS ENGINEER DATE

/s/ Mark A. Miller 03/27/13
CHIEF ENGINEER DATE

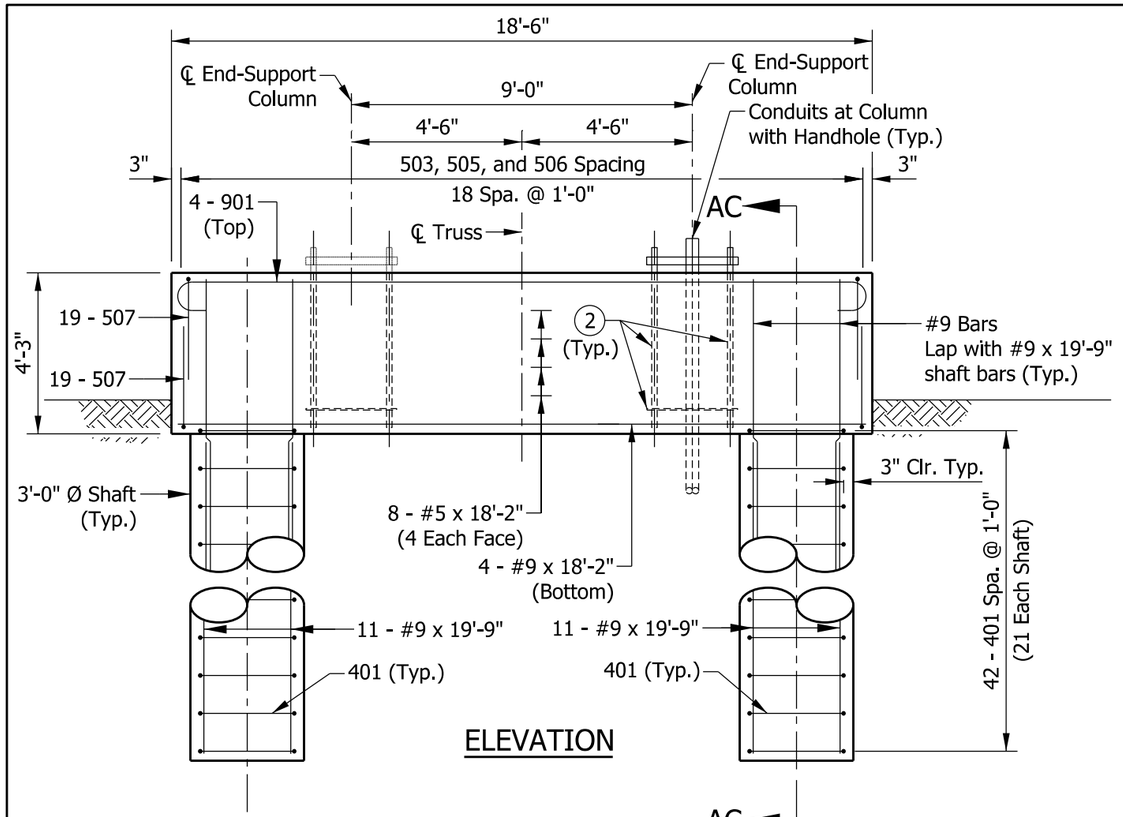

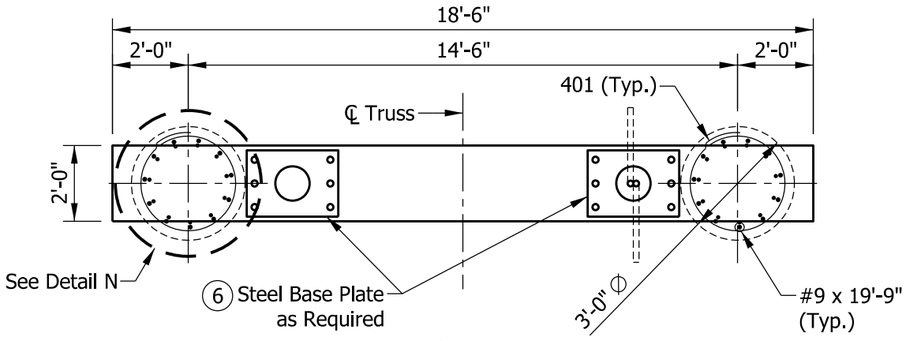

PLAN

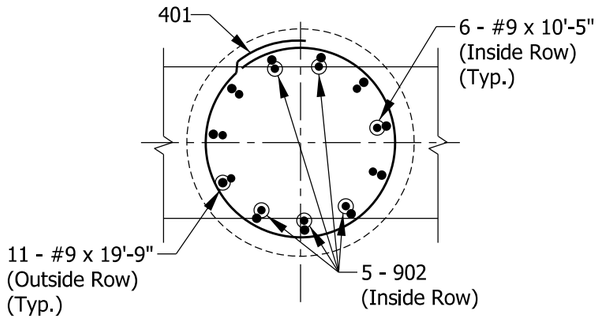

DETAIL N

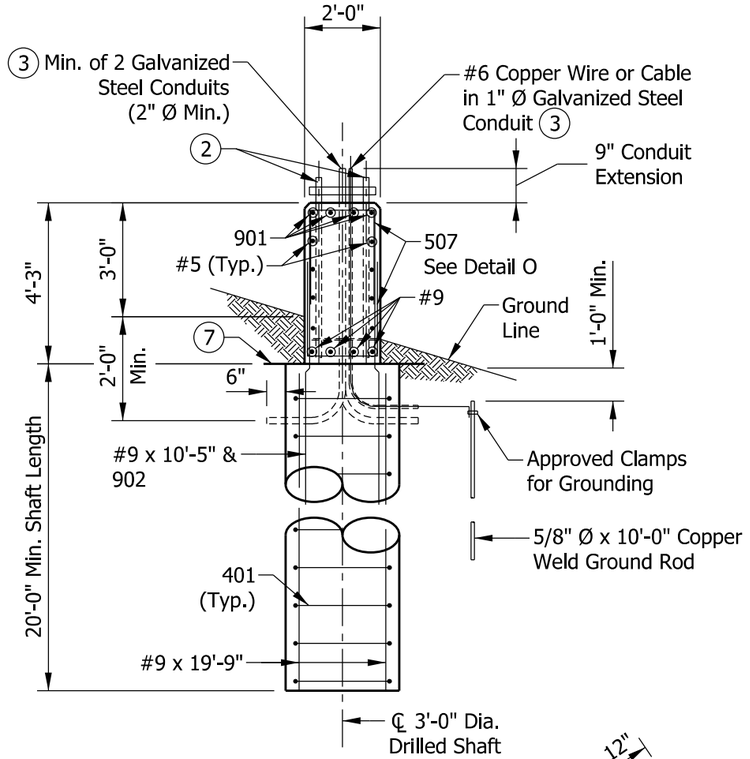

SECTION AC-AC

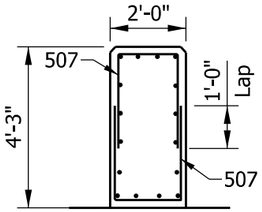

DETAIL O

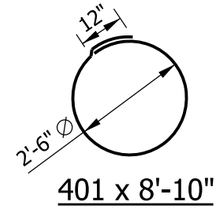

401 x 8'-10"

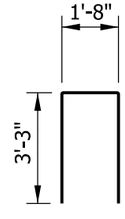

507 x 8'-2"

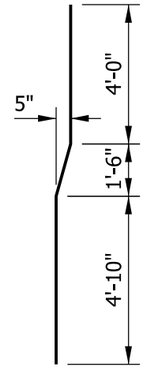

902 x 10'-5"

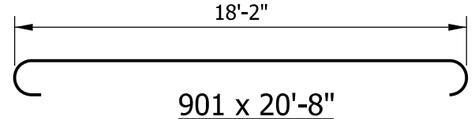

901 x 20'-8"

NOTES:

1. See Standard Drawing E 602-CCMB-03 for barrier wall width transition.
2. See Standard Drawing E 802-SBTS-13 for anchor bolt and anchor plate details.
3. Thread and cap both ends of steel conduit.
4. See Standard Drawing E 802-SBTS-29 for quantities.
5. See Standard Drawing E 703-BRST-01 for reinforcing-bar bending details and notes.
6. See Standard Drawing E 802-SBTS-11 for base plate details.
7. Top of foundation shall be level.

INDIANA DEPARTMENT OF TRANSPORTATION

SIGN BOX TRUSS STRUCTURE ALTERNATE DRILLED SHAFT FOUNDATION FOR MEDIAN OR SHOULDER, 36" HEIGHT

SEPTEMBER 2013

STANDARD DRAWING NO. E 802-SBTS-28

ALFREDO B. HANZA REGISTERED No. 60020657 STATE OF INDIANA PROFESSIONAL ENGINEER

/s/ Alfredo B. Hanza 02/05/13
DESIGN STANDARDS ENGINEER DATE

/s/ Mark A. Miller 03/27/13
CHIEF ENGINEER DATE

ALTERNATE DRILLED SHAFT FOUNDATION AT 33" CONCRETE BARRIER WALL			
EPOXY-COATED REINFORCING BARS			
MARK OR SIZE	NO. OF BARS	LENGTH	WEIGHT
901	4	20'-8"	
#9	4	18'-2"	
#9	22	23'-0"	
Total #9			2249 LBS
503	19	4'-8"	
504	38	3'-4"	
505	38	4'-11"	
#5	6	18'-2"	
Total #5			533 LBS
401	42	8'-10"	
Total #4			248 LBS
Total Epoxy-Coated Reinforcing Bars			3030 LBS
CONCRETE, CLASS A			
Total Concrete, Class A			20.0 CYS
MISCELLANEOUS			
Surface Seal			17.6 SYS

ALTERNATE DRILLED SHAFT FOUNDATION AT 45" CONCRETE BARRIER WALL			
EPOXY-COATED REINFORCING BARS			
MARK OR SIZE	NO. OF BARS	LENGTH	WEIGHT
901	4	20'-8"	
#9	4	18'-2"	
#9	22	24'-0"	
Total #9			2323 LBS
503	19	4'-8"	
505	38	4'-11"	
506	38	4'-4"	
#5	8	18'-2"	
Total #5			611 LBS
401	42	8'-10"	
Total #4			248 LBS
Total Epoxy-Coated Reinforcing Bars			3182 LBS
CONCRETE, CLASS A			
Total Concrete, Class A			20.8 CYS
MISCELLANEOUS			
Surface Seal			21.7 SYS

ALTERNATE DRILLED SHAFT FOUNDATION FOR MEDIAN OR SHOULDER, 36" HEIGHT			
EPOXY-COATED REINFORCING BARS			
MARK OR SIZE	NO. OF BARS	LENGTH	WEIGHT
901	4	20'-8"	
902	10	10'-5"	
#9	4	18'-2"	
#9	12	10'-5"	
#9	22	19'-9"	
Total #9			2785 LBS
507	38	8'-2"	
#5	8	18'-2"	
Total #5			475 LBS
401	42	8'-10"	
Total #4			248 LBS
Total Epoxy-Coated Reinforcing Bars			3508 LBS
CONCRETE, CLASS A			
Total Concrete, Class A			16.3 CYS
MISCELLANEOUS			
Surface Seal			21.6 SYS

INDIANA DEPARTMENT OF TRANSPORTATION

SIGN BOX TRUSS STRUCTURE ALTERNATE DRILLED SHAFT FOUNDATIONS QUANTITIES

SEPTEMBER 2013

STANDARD DRAWING NO. E 802-SBTS-29

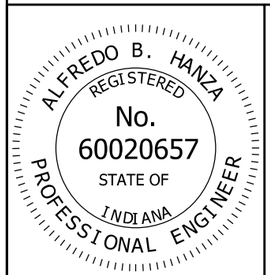

/s/ Alfredo B. Hanza *02/05/13*

DESIGN STANDARDS ENGINEER DATE

/s/ Mark A. Miller *03/27/13*

CHIEF ENGINEER DATE

INDEX	
SHEET NO.	SUBJECT
1	Index
2	Double Arm Plan and Elevation
3	Double Arm Panel Dimensions and Member Sizes
4	Double Arm Connections, Weld Details, Chord End Plate Details, and Camber
5	Double Arm Connection to Column Details
6	Double Arm Column Top Cap and Cable J-Hook
7	Quadri-Chord Plan and Elevation
8	Quadri-Chord Panel Dimensions and Member Sizes
9	Quadri-Chord Connections, Weld Details, Chord End Plate Details, and Camber
10	Quadri-Chord Lower Arm Connection to Column and Wire Outlet Detail
11	Quadri-Chord Upper Arm Connection to Column
12	Double Arm and Quadri-Chord Base Plate, Anchor Bolt, and Metal Skirt Details
13	Double Arm and Quadri-Chord Column Handhole and I.D. Tag Details
14	Structure Type A or B Foundation at 33" Concrete Barrier
15	Structure Type C, D, E, or F Foundation at 33" Concrete Barrier
16	Structure Type G, H, or I Foundation at 33" Concrete Barrier
17	Structure Type A or B Foundation at 45" Concrete Barrier
18	Structure Type C, D, E, or F Foundation at 45" Concrete Barrier
19	Structure Type G, H, or I Foundation at 45" Concrete Barrier
20	Structure Type A or B Foundation, 36" Height
21	Structure Type C, D, E, or F Foundation, 36" Height
22	Structure Type G, H, or I Foundation, 36" Height

INDIANA DEPARTMENT OF TRANSPORTATION

SIGN CANTILEVER STRUCTURE
DRAWING INDEX

SEPTEMBER 2013

STANDARD DRAWING NO. E 802-SCLS-01

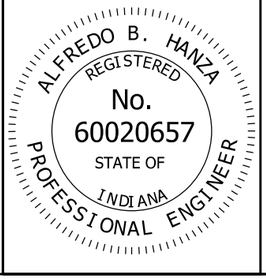

/s/ Alfredo B. Hanza 03/25/13
DESIGN STANDARDS ENGINEER DATE

/s/ Mark A. Miller 03/27/13
CHIEF ENGINEER DATE

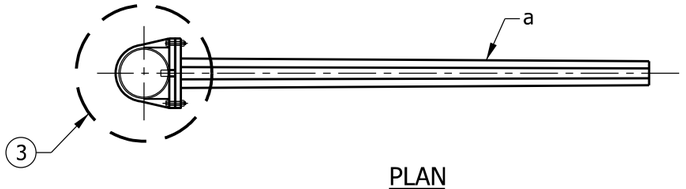

PLAN

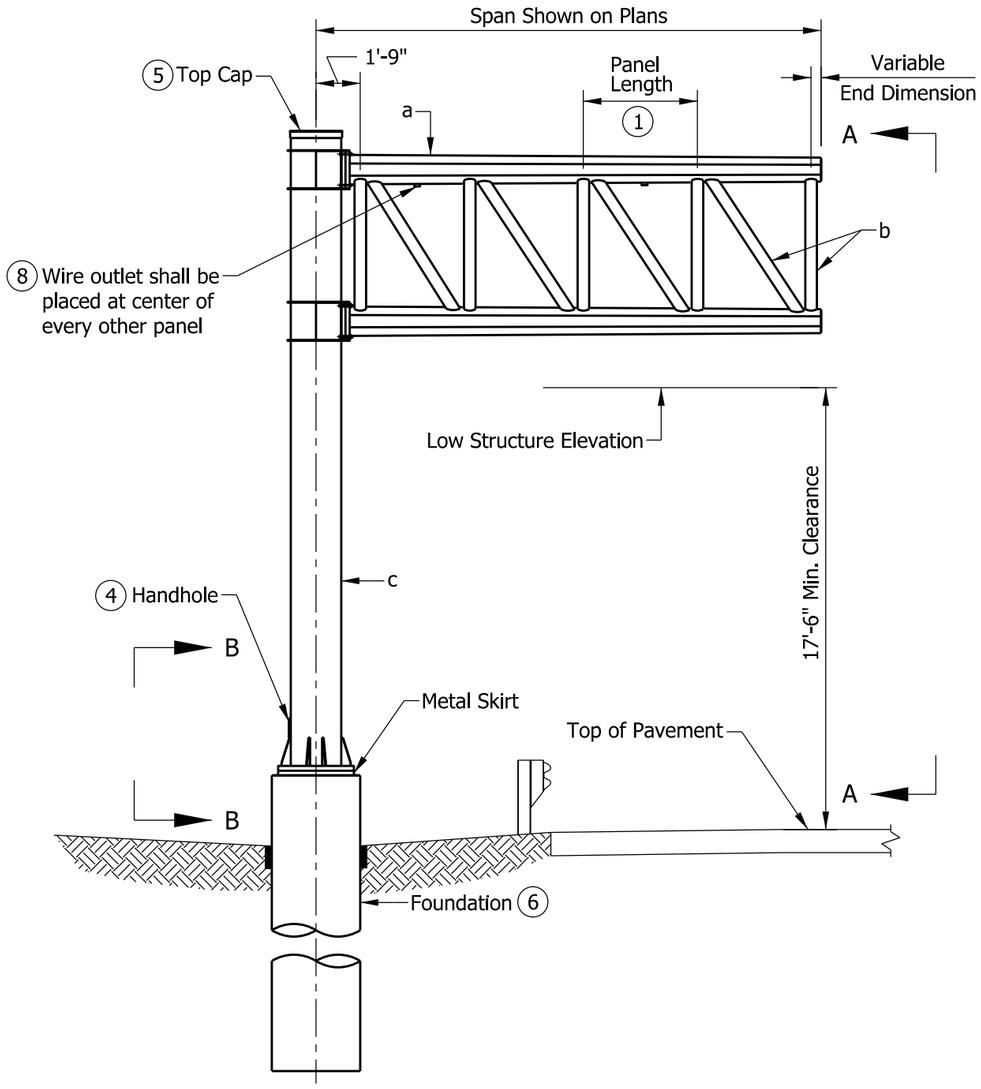

FRONT ELEVATION

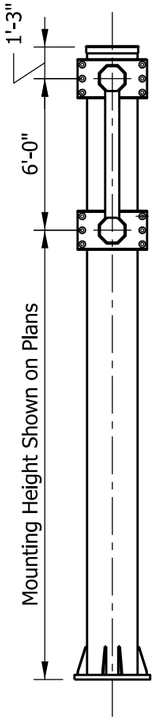

ELEVATION A-A

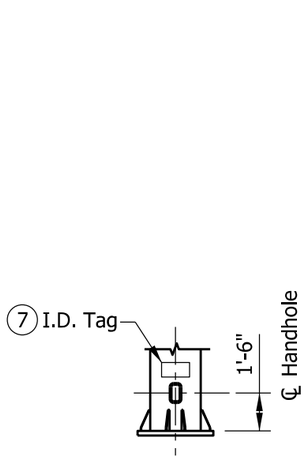

ELEVATION B-B

NOTES:

1. See Standard Drawing E 802-SCLS-03 for panel dimensions and member sizes.
2. Maximum deviation of a chord from a straight line shall be 1/8".
3. See Standard Drawing E 802-SCLS-05 for connection to column details.
4. See Standard Drawing E 802-SCLS-13 for handhole detail.
5. See Standard Drawing E 802-SCLS-06 for top cap and cable J-hook detail.
6. See Standard Drawings E 802-SCLS-14, -17, and -20 for foundation details.
7. See Standard Drawing E 802-SCLS-13 for I.D. tag detail.
8. See Standard Drawing E 802-SCLS-10 for wire outlet detail.

LEGEND:

a - Chord

b - Vertical and Vertical Diagonal

c - Column

INDIANA DEPARTMENT OF TRANSPORTATION

SIGN CANTILEVER STRUCTURE
DOUBLE ARM
PLAN AND ELEVATION
SEPTEMBER 2013

STANDARD DRAWING NO. E 802-SCLS-02

ALFREDO B. HANZA
REGISTERED
No. 60020657
STATE OF INDIANA
PROFESSIONAL ENGINEER

/s/ Alfredo B. Hanza 02/05/13
DESIGN STANDARDS ENGINEER DATE

/s/ Mark A. Miller 03/27/13
CHIEF ENGINEER DATE

DOUBLE ARM PANEL DIMENSIONS			
SPAN	NO. OF PANELS	PANEL LENGTH	VARIABLE END DIMENSION
10'	2	4'-0"	0'-3"
11'	3	3'-0"	0'-3"
12'	3	3'-3"	0'-6"
13'	3	3'-6"	0'-9"
14'	3	4'-0"	0'-3"
15'	3	4'-3"	0'-6"
16'	4	3'-6"	0'-3"
17'	4	3'-9"	0'-3"
18'	4	4'-0"	0'-3"
19'	4	4'-3"	0'-3"
20'	4	4'-6"	0'-3"

NOTES:

1. All panels on the double arm shall be the same length. The minimum panel length is 3'-0" and the maximum is 4'-6".
2. See Standard Drawing E 802-SCLS-04 for connections, weld details, and required camber.
3. For base plate and anchor bolt details see Standard Drawing E 802-SCLS-12.
4. See Standard Drawings E 802-SCLS-14, -17, and -20 for foundation details.
5. All member diameters shown are outside diameters.
6. Double arm chord shape shall be octagonal tubular with 0.14 in./ft. taper, maximum diameter shown in table.

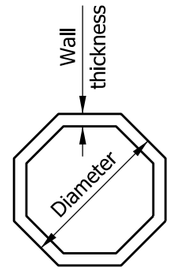

OCTAGON TUBULAR SHAPE

DOUBLE ARM MEMBER SIZES									
STR. TYPE	MAX SPAN (FT.)	MAX SIGN AREA (FT.)	MAX MOUNTING HEIGHT (FT.)	6 CHORD a		VERTICAL/VERTICAL DIAGONAL b		COLUMN c	
				DIAMETER (IN.)	WALL THICK. (IN.)	DIAMETER (IN.)	WALL THICK. (IN.)	DIAMETER (IN.)	WALL THICK. (IN.)
A	10	180	24	7 5/8	0.500	4 1/2	0.337	18	0.750
B	15	280	24	10 3/4	0.593	5 9/16	0.500	20	0.812
C	20	380	24	14	0.593	6 5/8	0.719	24	0.968

INDIANA DEPARTMENT OF TRANSPORTATION

SIGN CANTILEVER STRUCTURE
DOUBLE ARM
PANEL DIMENSIONS AND MEMBER SIZES
SEPTEMBER 2013

STANDARD DRAWING NO. E 802-SCLS-03

ALFREDO B. HANZA REGISTERED No. 60020657 STATE OF INDIANA PROFESSIONAL ENGINEER

/s/ Alfredo B. Hanza 02/05/13
DESIGN STANDARDS ENGINEER DATE

/s/ Mark A. Miller 03/27/13
CHIEF ENGINEER DATE

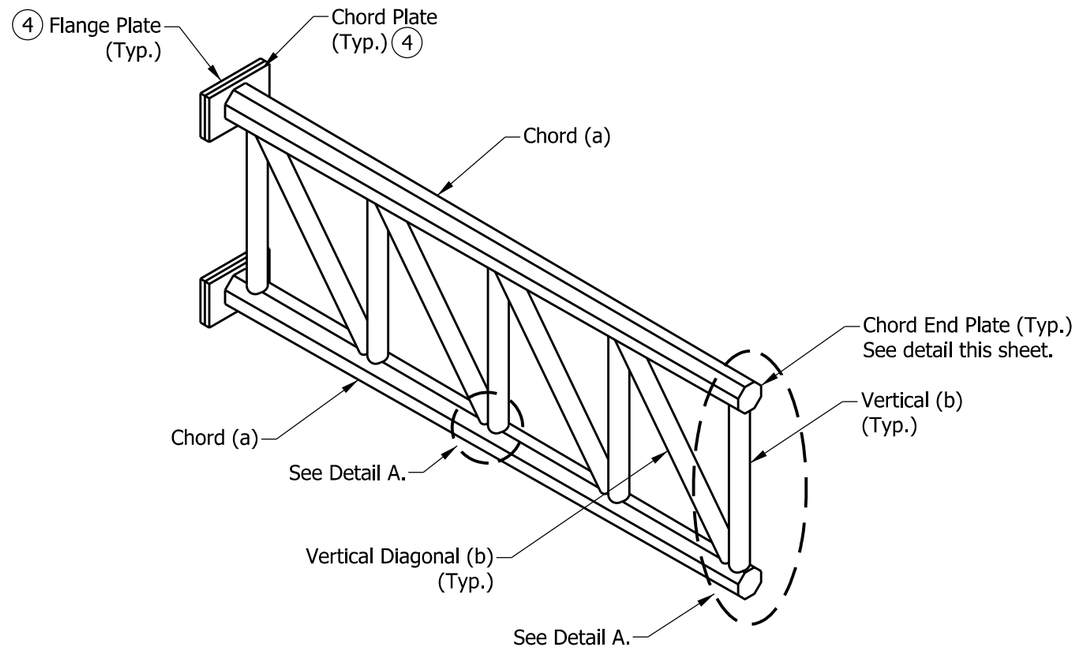

DOUBLE ARM

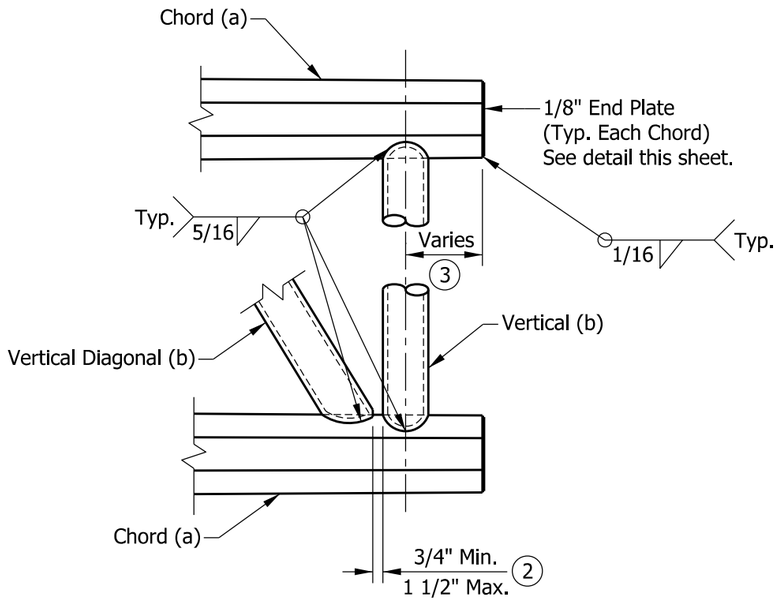

DETAIL A

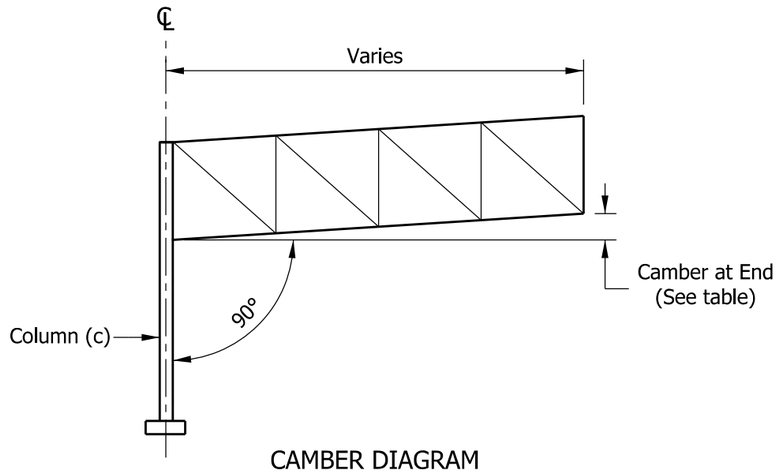

CAMBER DIAGRAM

DOUBLE ARM		
STR. TYPE	LENGTH	CAMBER AT END (IN.)
A	10'-0"	0.375
B	15'-0"	0.750
C	20-0"	1.000

NOTES:

1. See Standard Drawing E 802-SCLS-03 for panel dimensions and member sizes.
2. Vertical diagonals shall be placed for minimum offset from the panel point such that the offset shall provide a 3/4" minimum to 1 1/2" maximum clearance between each diagonal and vertical member, and to provide clearance for U-bolt connections to signs.
3. For variable end dimension, see table of panel dimensions on Standard Drawing E 802-SCLS-03.
4. See Standard Drawing E 802-SCLS-05 for flange plate and chord plate details.

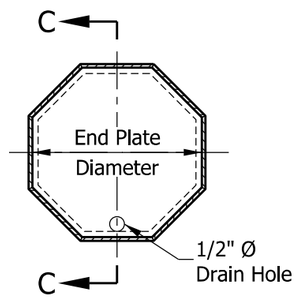

END VIEW

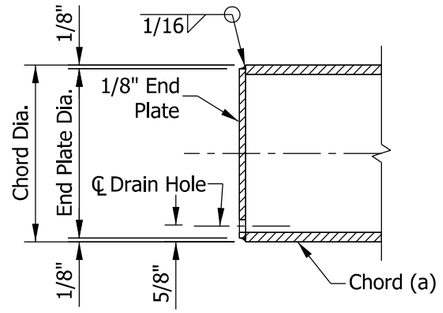

SECTION C-C

CHORD END PLATE DETAILS

INDIANA DEPARTMENT OF TRANSPORTATION

SIGN CANTILEVER STRUCTURE
DOUBLE ARM CONNECTIONS, WELD DETAILS, CHORD END PLATE DETAILS, AND CAMBER
SEPTEMBER 2013

STANDARD DRAWING NO. E 802-SCLS-04

ALFREDO B. HANZA REGISTERED No. 60020657 STATE OF INDIANA PROFESSIONAL ENGINEER

/s/ Alfredo B. Hanza 02/05/13
DESIGN STANDARDS ENGINEER DATE

/s/ Mark A. Miller 03/27/13
CHIEF ENGINEER DATE

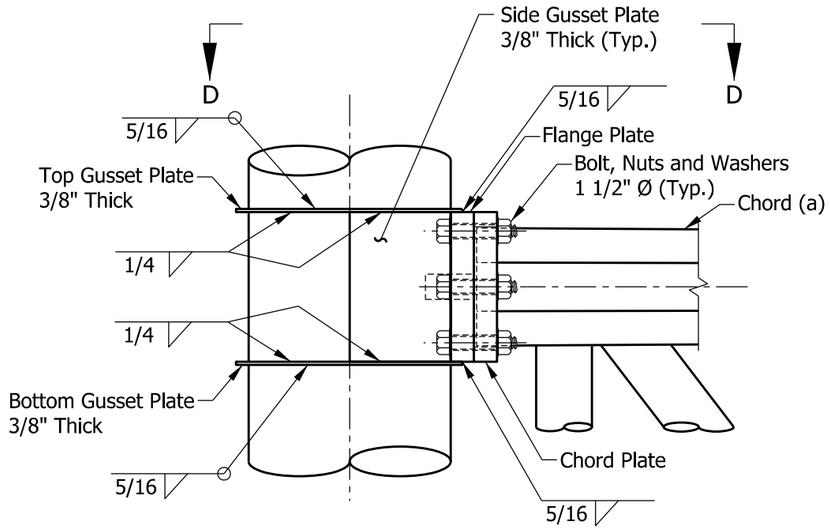

DOUBLE ARM TRUSS CONNECTION
ELEVATION

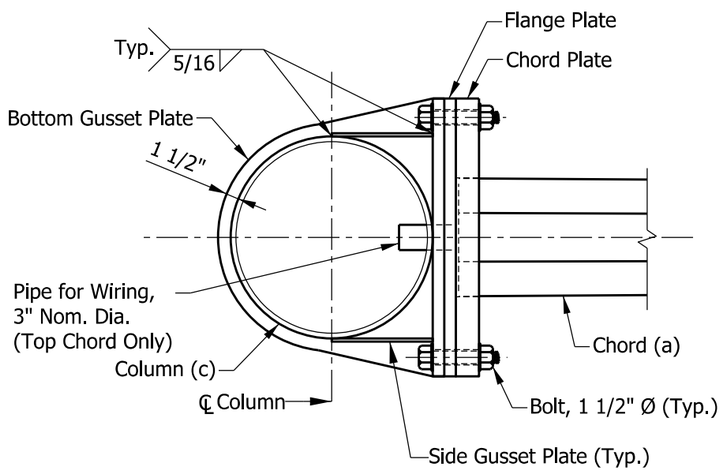

SECTION D-D

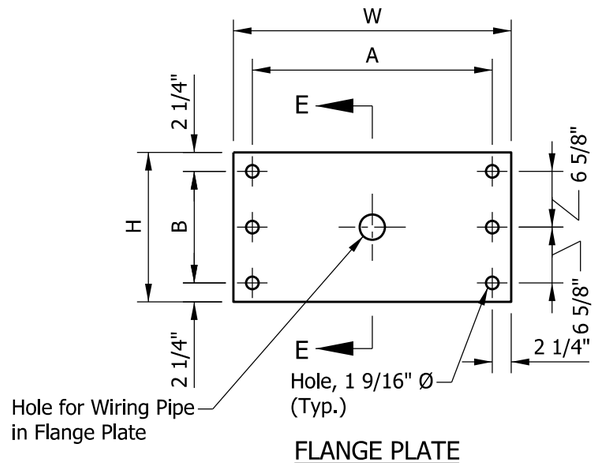

FLANGE PLATE

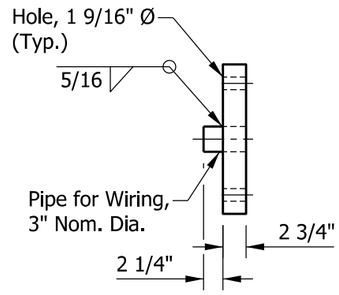

SECTION E-E

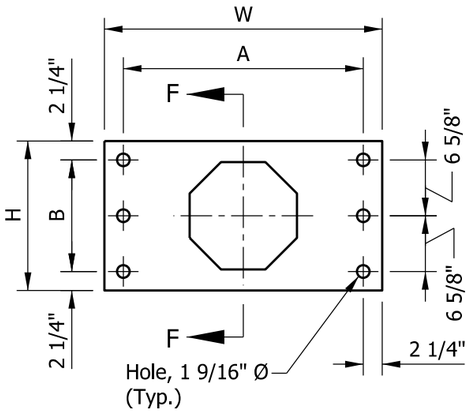

CHORD PLATE

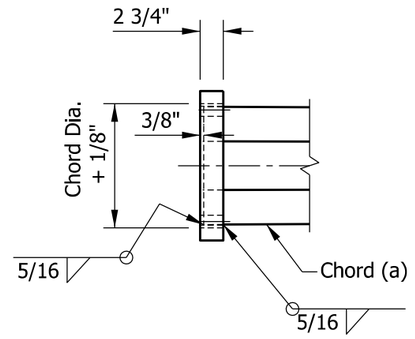

SECTION F-F

PLATE DIMENSIONS					
COLUMN DIAMETER	CHORD DIAMETER	W	H	A	B
18"	7 5/8"	2'-3"	1'-2"	1'-10 1/2"	9 1/2"
20"	10 3/4"	2'-5"	1'-5"	2'-0 1/2"	1'-0 1/2"
24"	14"	2'-9"	1'-6"	2'-4 1/2"	1'-1 1/2"

INDIANA DEPARTMENT OF TRANSPORTATION

SIGN CANTILEVER STRUCTURE
DOUBLE ARM
CONNECTION TO COLUMN DETAILS

SEPTEMBER 2013

STANDARD DRAWING NO. E 802-SCLS-05

ALFREDO B. HANZA
REGISTERED
No. 60020657
STATE OF INDIANA
PROFESSIONAL ENGINEER

/s/ Alfredo B. Hanza 02/05/13
DESIGN STANDARDS ENGINEER DATE

/s/ Mark A. Miller 03/27/13
CHIEF ENGINEER DATE

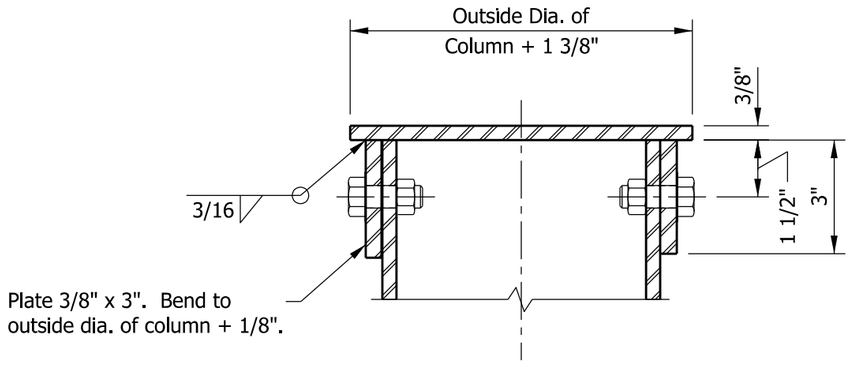

SECTION G-G

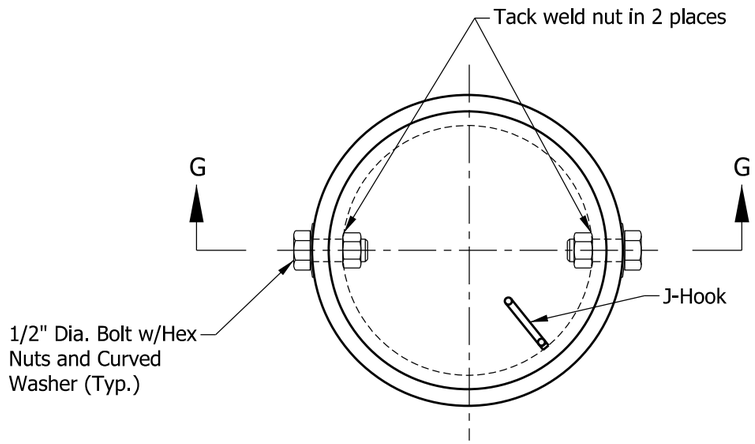

PLAN
TOP CAP - STEEL COLUMN

NOTES:

1. J-hook shall consist of 3/8" dia. bars constructed as shown, and spot-welded to inside of the columns.
2. Cap bolts used to attach top cap of columns shall be located to miss J-hook.

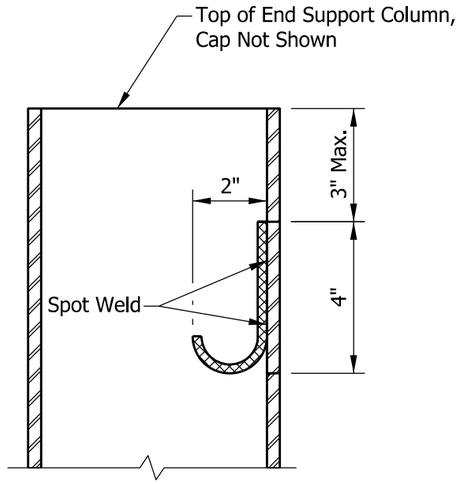

CABLE J-HOOK

INDIANA DEPARTMENT OF TRANSPORTATION

SIGN CANTILEVER STRUCTURE
DOUBLE ARM COLUMN TOP CAP
AND CABLE J-HOOK

SEPTEMBER 2013

STANDARD DRAWING NO. E 802-SCLS-06

ALFREDO B. HANZA
REGISTERED
No.
60020657
STATE OF
INDIANA
PROFESSIONAL ENGINEER

/s/ Alfredo B. Hanza 02/05/13
DESIGN STANDARDS ENGINEER DATE

/s/ Mark A. Miller 03/27/13
CHIEF ENGINEER DATE

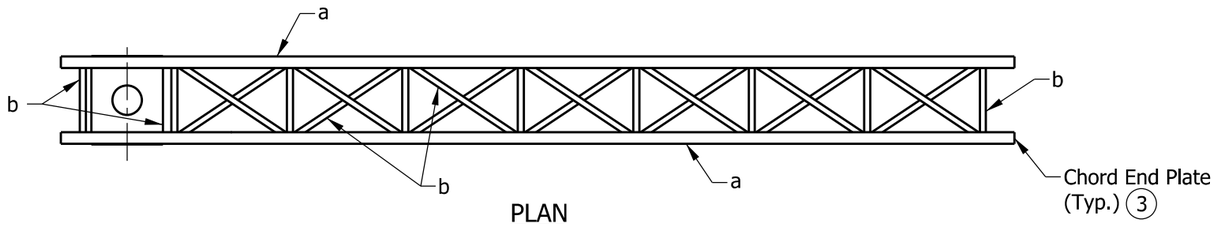

PLAN

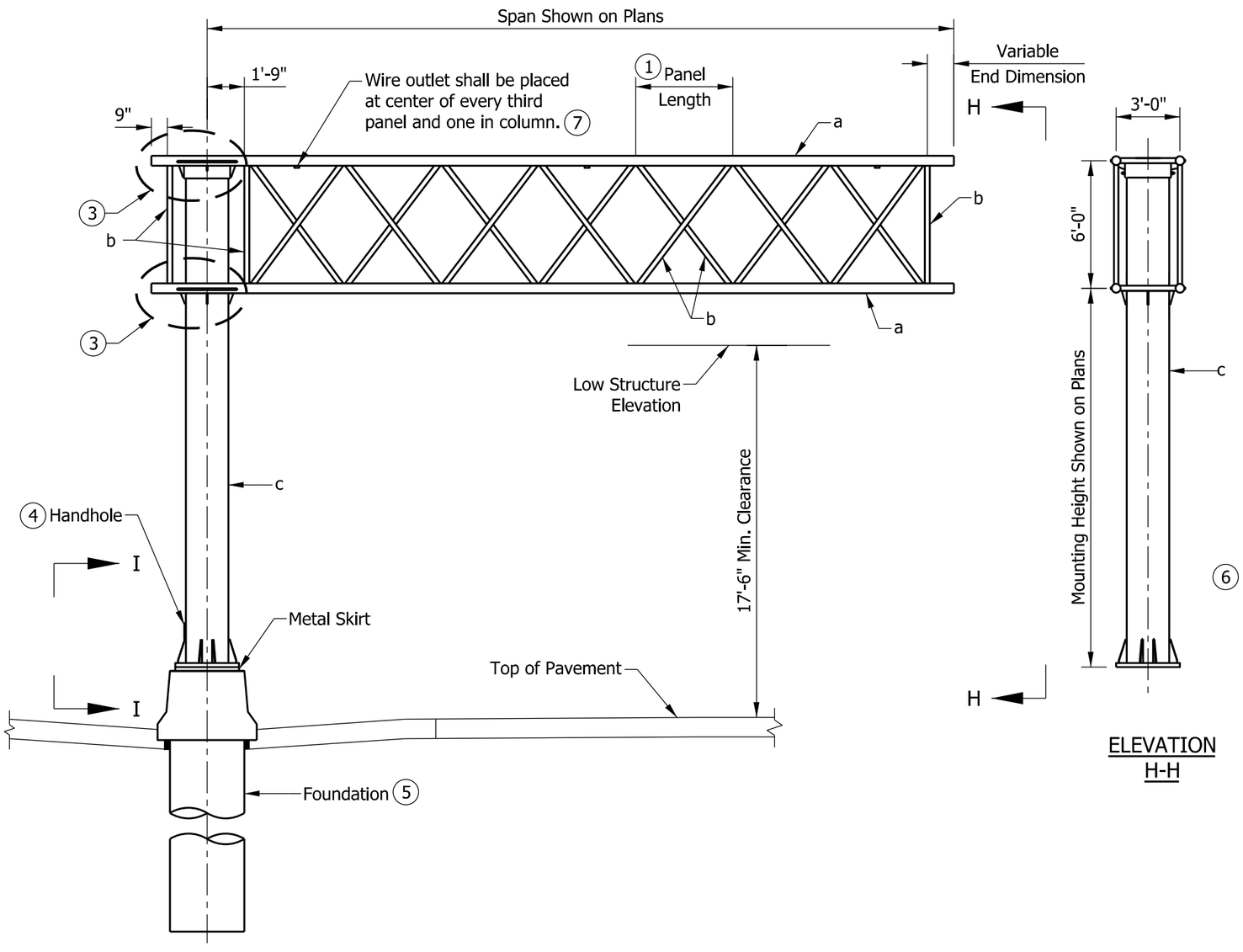

FRONT ELEVATION

ELEVATION
H-H

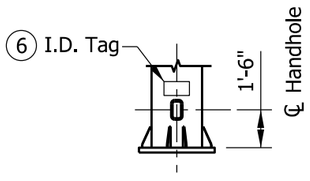

ELEVATION
I-I

NOTES:

1. See Standard Drawing E 802-SCLS-08 for panel dimensions and member sizes.
2. Maximum deviation of a chord from a straight line shall be 1/8".
3. See Standard Drawings E 802-SCLS-09 through -11 for quadri-chord arm connection, weld details, chord end plate details, and camber.
4. See Standard Drawing E 802-SCLS-13 for handhole detail.
5. See Standard Drawings E 802-SCLS-15, -16, -18, -19, -21, and -22 for foundation details.
6. See Standard Drawing E 802-SCLS-13 for I.D. tag detail.
7. See Standard Drawing E 802-SCLS-10 for wire outlet detail.

LEGEND:

a - Chord

b - Interior members:
Verticals and vertical diagonals in front and back faces, and horizontals and horizontal diagonals in top and bottom faces of arm.

c - Column

INDIANA DEPARTMENT OF TRANSPORTATION

SIGN CANTILEVER STRUCTURE
QUADRI-CHORD
PLAN AND ELEVATION
SEPTEMBER 2013

STANDARD DRAWING NO. E 802-SCLS-07

ALFREDO B. HANZA
REGISTERED
No.
60020657
STATE OF
INDIANA
PROFESSIONAL ENGINEER

/s/ Alfredo B. Hanza 02/05/13
DESIGN STANDARDS ENGINEER DATE

/s/ Mark A. Miller 03/27/13
CHIEF ENGINEER DATE

PANEL DIMENSIONS			
SPAN	NO. OF PANELS	PANEL LENGTH	VARIABLE END DIMENSION
21'	5	3'-9"	0'-6"
22'	5	3'-9"	1'-6"
23'	5	4'-0"	1'-3"
24'	5	4'-3"	1'-0"
25'	5	4'-6"	0'-9"
26'	6	3'-9"	1'-9"
27'	6	4'-0"	1'-3"
28'	6	4'-3"	0'-9"
29'	6	4'-3"	1'-9"
30'	6	4'-6"	1'-3"
31'	7	4'-0"	1'-3"
32'	7	4'-3"	0'-6"
33'	7	4'-3"	1'-6"
34'	7	4'-6"	0'-9"
35'	7	4'-6"	1'-9"

NOTES:

1. All panels in a structure shall be the same length. The minimum panel length is 3'-9" and the maximum is 4'-6".
2. See Standard Drawing E 802-SCLS-09 for connections, weld details, and required camber.
3. For base plate, anchor bolt, and metal skirt details see Standard Drawing E 802-SCLS-12.
4. All member diameters shown are outside diameters.

(5) Quadri-chord arm chord shape shall be circular with constant diameter.

QUADRI-CHORD MEMBER SIZES									
STR. TYPE	MAX SPAN (FT.)	MAX SIGN AREA (FT.)	MAX MOUNTING HEIGHT (FT.)	(5) CHORD a		VERT./HORIZ./DIAG. b		COLUMN c	
				DIAMETER (IN.)	WALL THICK. (IN.)	DIAMETER (IN.)	WALL THICK. (IN.)	DIAMETER (IN.)	WALL THICK. (IN.)
D	25	300	24	5 9/16	0.258	2 7/8	0.203	24	0.562
E	30	300	24	5 9/16	0.258	2 7/8	0.203	24	0.562
F	35	300	24	5 9/16	0.375	2 7/8	0.276	24	0.688
G	25	400	24	5 9/16	0.375	2 7/8	0.276	24	0.968
H	30	400	24	5 9/16	0.375	2 7/8	0.276	24	0.968
I	35	400	24	5 9/16	0.375	2 7/8	0.276	24	0.968

INDIANA DEPARTMENT OF TRANSPORTATION

SIGN CANTILEVER STRUCTURE
QUADRI-CHORD
PANEL DIMENSIONS AND MEMBER SIZES
SEPTEMBER 2013

STANDARD DRAWING NO. E 802-SCLS-08

ALFREDO B. HANZA
REGISTERED
No. 60020657
STATE OF INDIANA
PROFESSIONAL ENGINEER

/s/ Alfredo B. Hanza 02/05/13
DESIGN STANDARDS ENGINEER DATE

/s/ Mark A. Miller 03/27/13
CHIEF ENGINEER DATE

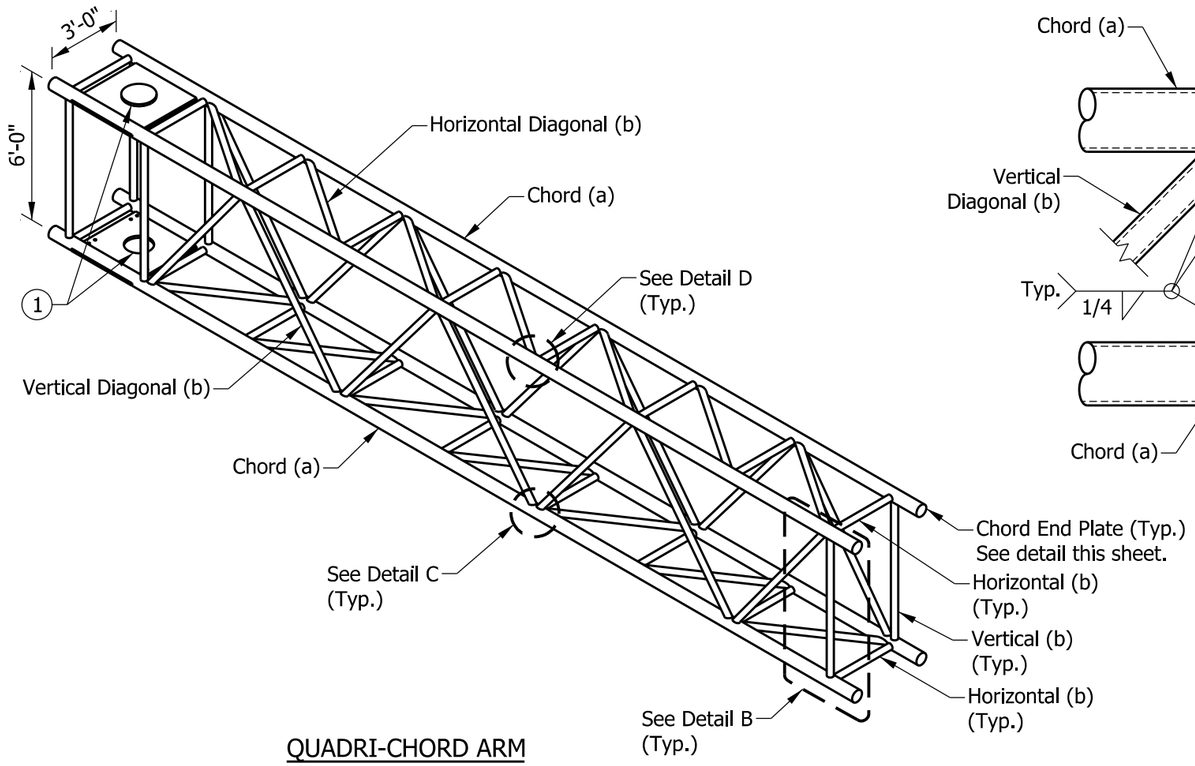

QUADRI-CHORD ARM

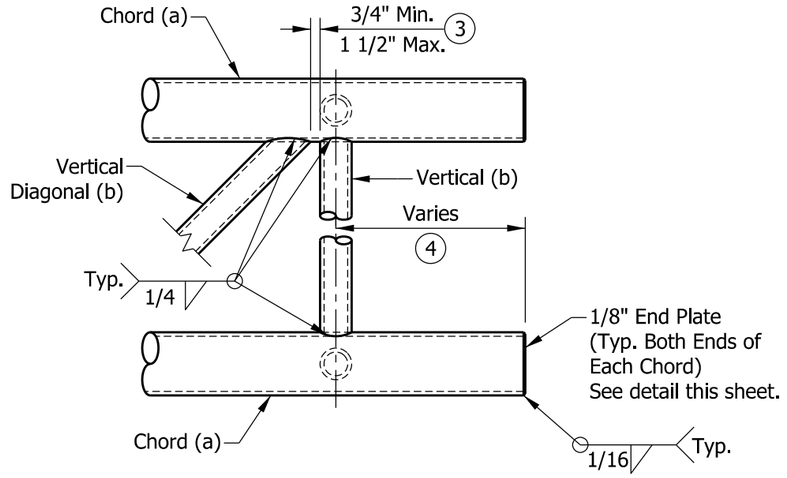

DETAIL B

NOTES:

1. See Standard Drawing E 802-SCLS-10 and -11 for quadri-chord arm connection to column details.
2. See Standard Drawing E 802-SCLS-08 for panel dimensions and member sizes.
3. Vertical diagonals shall be placed for minimum offset from the panel point such that the offset shall provide a 3/4" minimum to 1 1/2" maximum clearance between each diagonal and vertical member, and to provide clearance for U-bolt connections to signs.
4. For variable end dimension, see table on Standard Drawing E 802-SCLS-08.

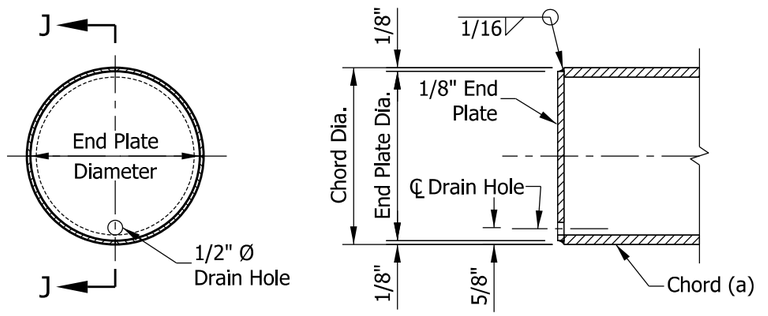

END VIEW SECTION J-J

CHORD END PLATE DETAILS

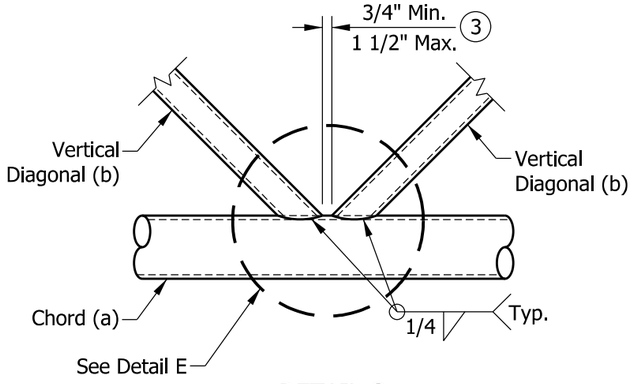

DETAIL C
TYPICAL PANEL CONNECTION

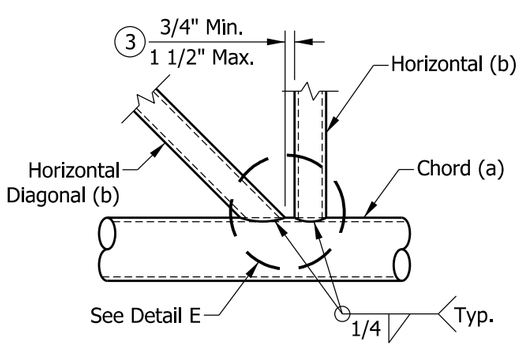

DETAIL D
TYPICAL PANEL CONNECTION

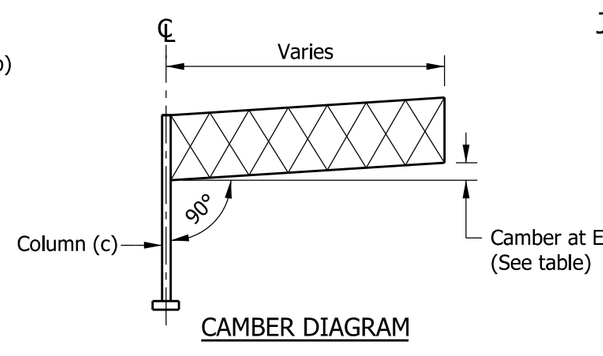

CAMBER DIAGRAM

QUADRI-CHORD ARM		
STR. TYPE	LENGTH	CAMBER AT END (IN.)
D	25'-0"	1.750
E	30'-0"	2.625
F	35'-0"	3.500
G	25'-0"	1.250
H	30'-0"	2.000
I	35'-0"	3.000

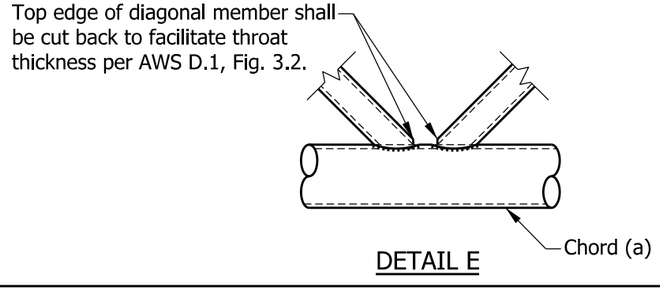

DETAIL E

INDIANA DEPARTMENT OF TRANSPORTATION

SIGN CANTILEVER STRUCTURE
QUADRI-CHORD CONNECTIONS, WELD DETAILS,
CHORD END PLATE DETAILS, AND CAMBER
SEPTEMBER 2013

STANDARD DRAWING NO. E 802-SCLS-09

ALFREDO B. HANZA
REGISTERED
No. 60020657
STATE OF INDIANA
PROFESSIONAL ENGINEER

/s/ Alfredo B. Hanza 02/05/13
DESIGN STANDARDS ENGINEER DATE

/s/ Mark A. Miller 03/27/13
CHIEF ENGINEER DATE

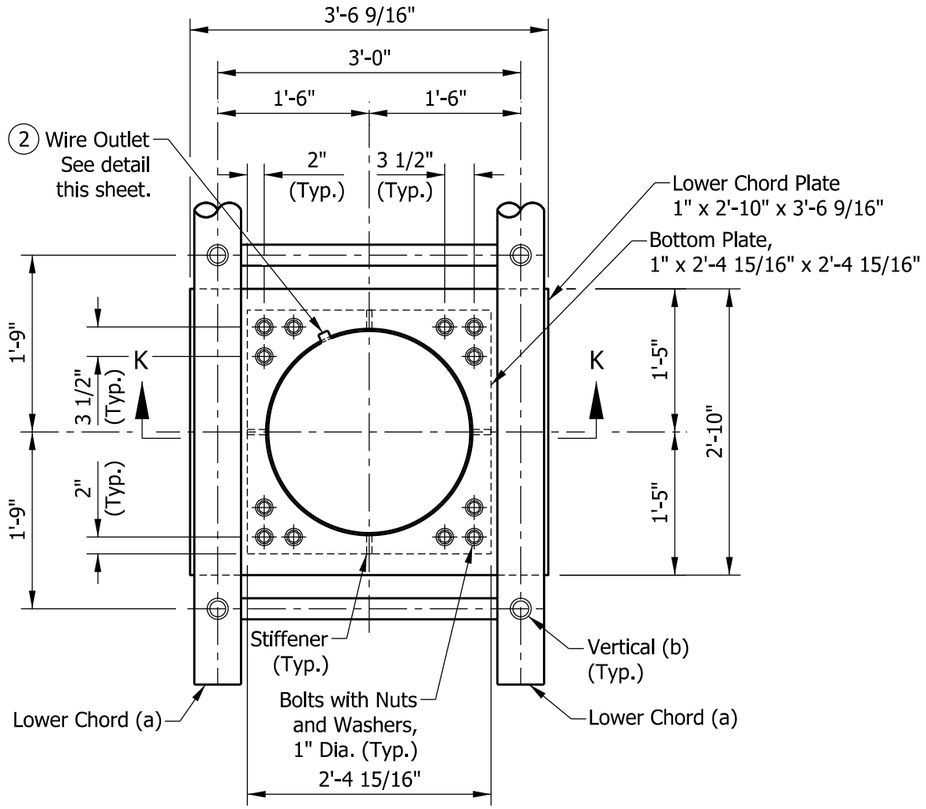

PLAN VIEW THROUGH COLUMN ABOVE LOWER CHORDS

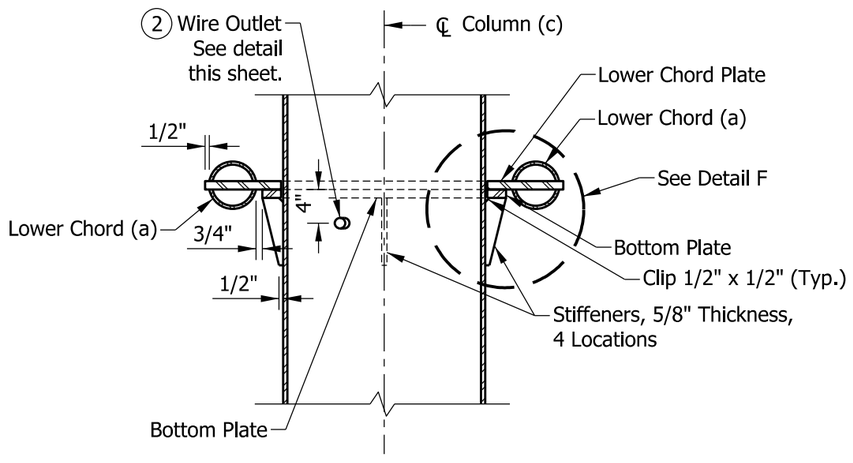

SECTION K-K

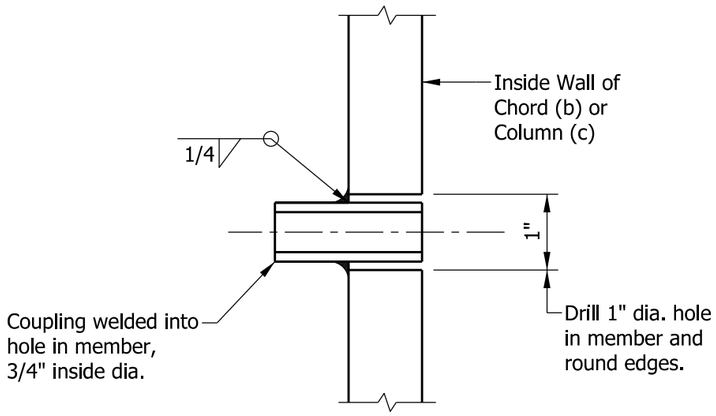

TYPICAL WIRE OUTLET

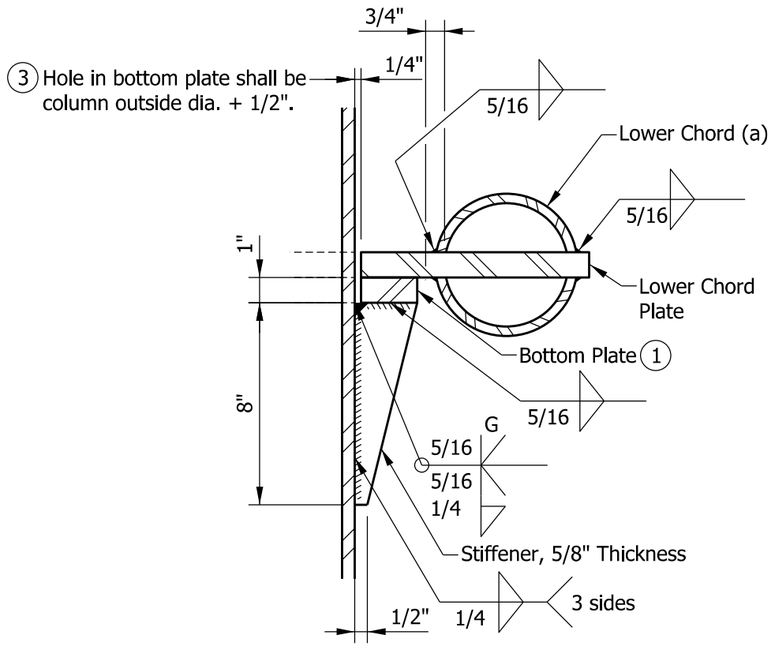

DETAIL F

NOTES:

1. Grind top of bottom plate if required to fully seat lower chord plate. Repair damaged galvanizing before assembly.
2. Orient pipe toward sign. Hole diameter in column shall equal outside pipe diameter + 1/8".
3. After tightening lower connection bolts, fill gap with non-hardening silicone caulk suitable for exterior exposure.

INDIANA DEPARTMENT OF TRANSPORTATION

SIGN CANTILEVER STRUCTURE QUADRI-CHORD LOWER ARM CONNECTION TO COLUMN AND WIRE OUTLET DETAIL

SEPTEMBER 2013

STANDARD DRAWING NO. E 802-SCLS-10

ALFREDO B. HANZA REGISTERED No. 60020657 STATE OF INDIANA PROFESSIONAL ENGINEER

/s/ Alfredo B. Hanza 03/25/13
DESIGN STANDARDS ENGINEER DATE

/s/ Mark A. Miller 03/27/13
CHIEF ENGINEER DATE

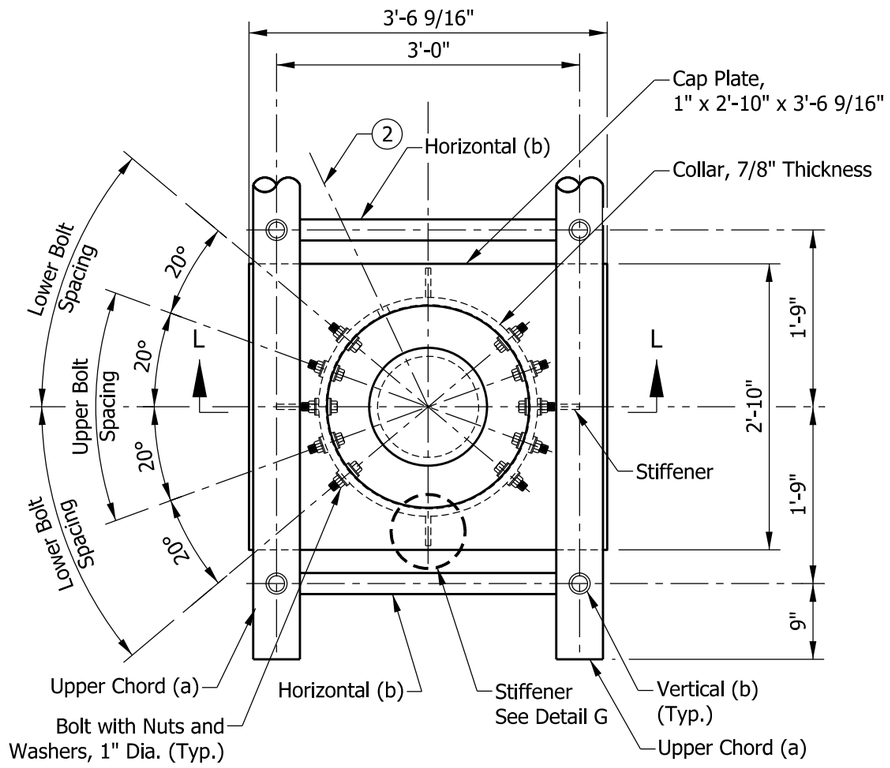

PLAN VIEW - TOP OF COLUMN
ABOVE UPPER CHORDS

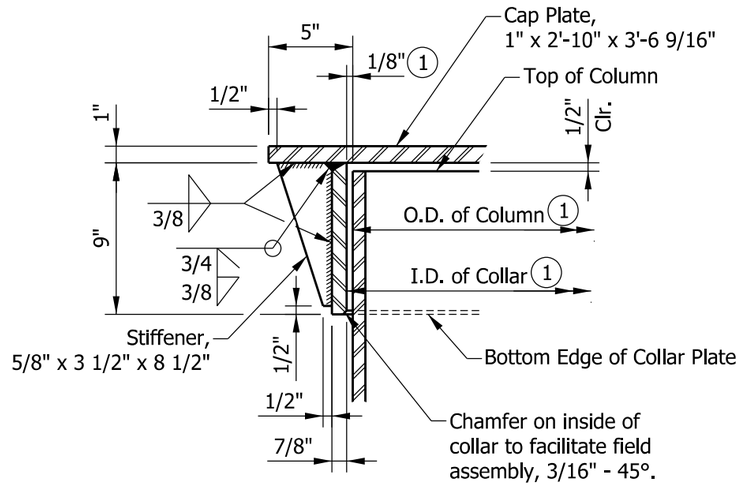

DETAIL G

NOTES:

1. After galvanizing, collar inside diameter shall equal outside diameter of galvanized column plus 1/8" ± 1/16". Maximum gap between column and collar shall be 1/8" before tightening bolts.
2. Optional full penetration weld in collar may be made at two locations, 180° apart. X-ray or ultrasonic test (UT) 100%.
3. See Standard Drawing E 802-SCLS-08 for dimensions and member sizes.

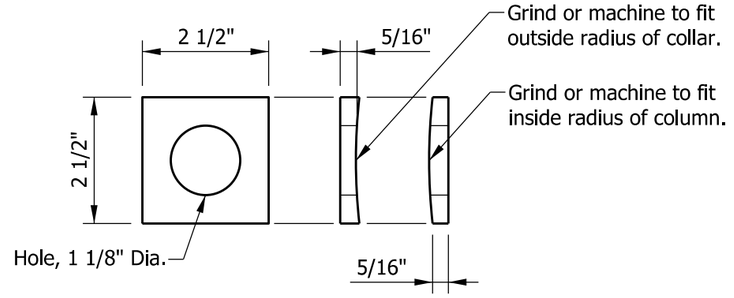

CONTOURED WASHER

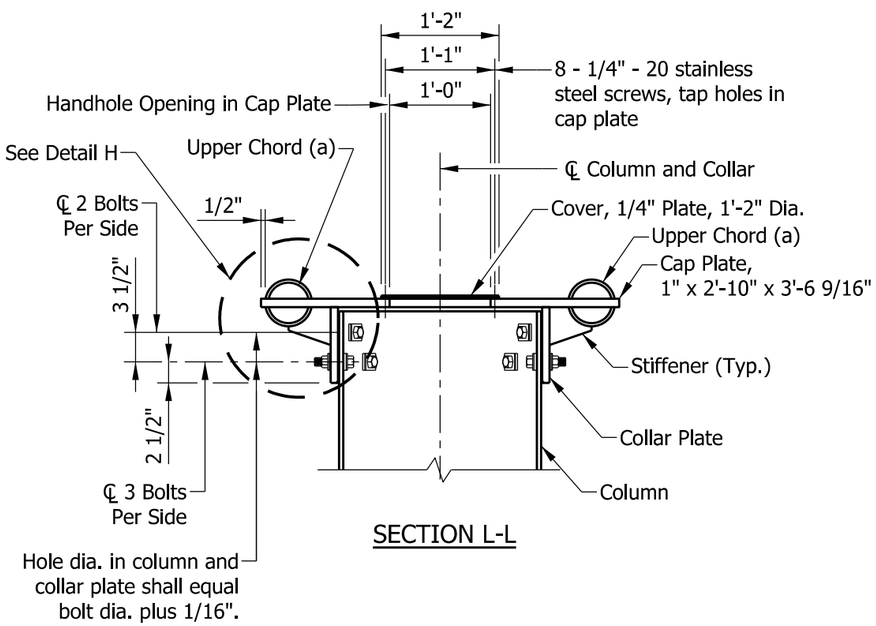

SECTION L-L

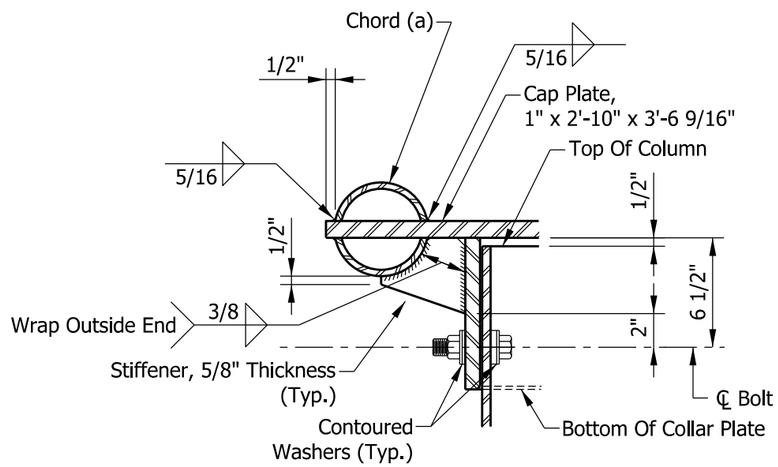

DETAIL H

INDIANA DEPARTMENT OF TRANSPORTATION

SIGN CANTILEVER STRUCTURE
QUADRI-CHORD UPPER ARM CONNECTION
TO COLUMN

SEPTEMBER 2013

STANDARD DRAWING NO. E 802-SCLS-11

ALFREDO B. HANZA
REGISTERED
No. 60020657
STATE OF INDIANA
PROFESSIONAL ENGINEER

/s/ Alfredo B. Hanza	03/26/13
DESIGN STANDARDS ENGINEER	DATE
/s/ Mark A. Miller	03/27/13
CHIEF ENGINEER	DATE

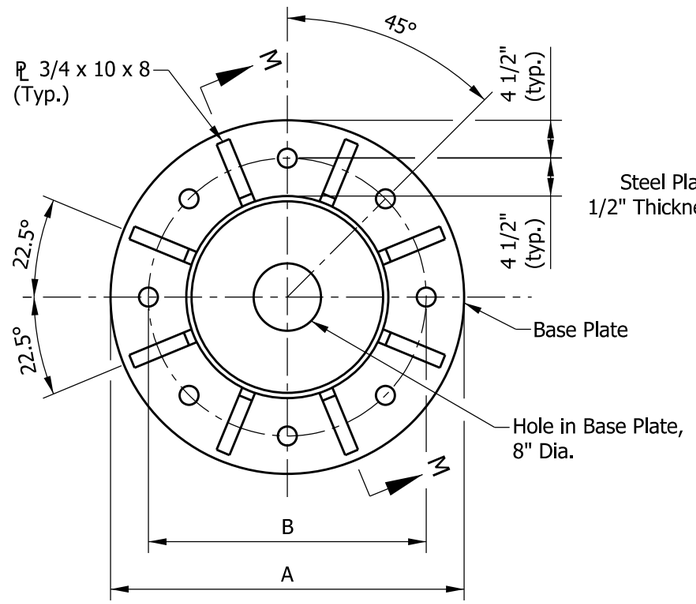

PLAN

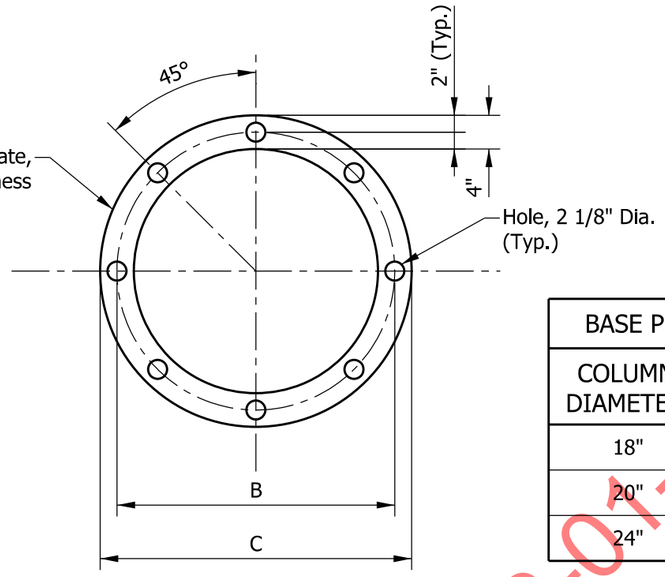

ANCHOR AND POSITIONING PLATE

BASE PLATE DIMENSIONS			
COLUMN DIAMETER	A	B	C
18"	3'-0"	2'-3"	2'-7"
20"	3'-2"	2'-5"	2'-9"
24"	3'-6"	2'-9"	3'-1"

NOTES:

1. Minimum length which shall be galvanized. Entire bolt may be galvanized at contractor's option.
2. Provide uncoated nut at bottom of anchor plate. Deform thread or use chemical thread lock to secure.
3. Use continuous backer ring, 5/16" x 2" minimum. Tack weld only in root area of final weld.
4. Anchor bolt nuts shall be tightened against the base plate by turning the nut a minimum of 1/6 turn from snug tight condition.
5. See Standard Drawings E 802-SCLS-03 and -08 for column wall thickness.
6. UT - Ultrasonic Testing, 25% of entire column to base plate weld. MT - Magnetic Particle Testing, 25% or 1 side of 4 stiffeners.

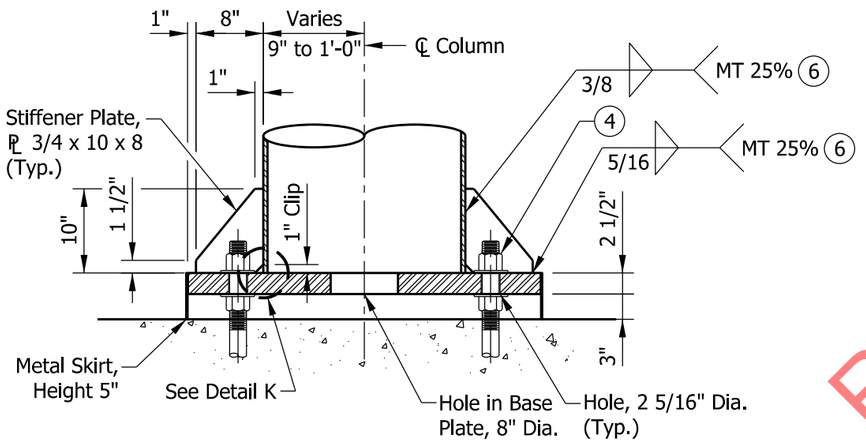

SECTION M-M

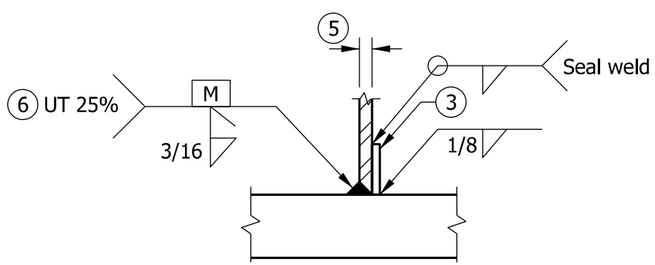

DETAIL K
BASE PLATE WELD

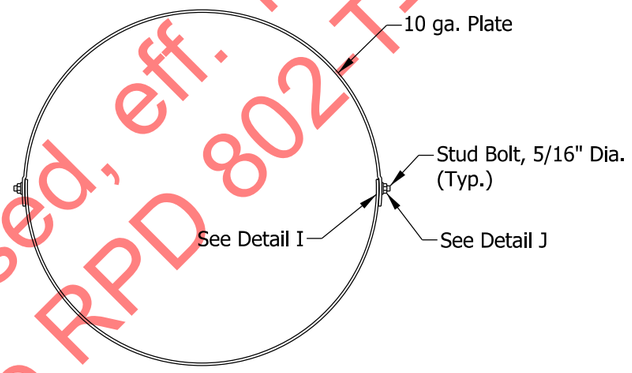

SKIRT DETAIL

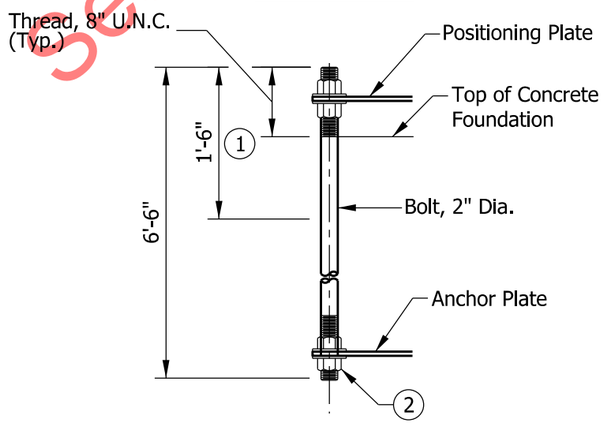

ANCHOR BOLT DETAIL

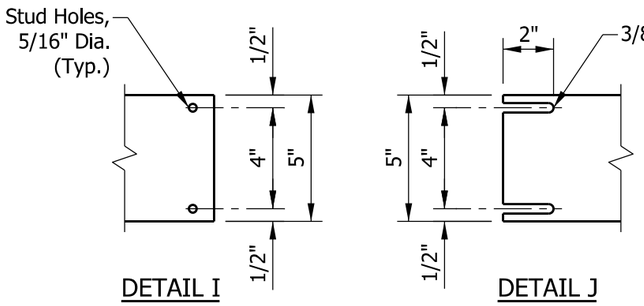

DETAIL I DETAIL J

Revised, eff. 12-01-13
See RPD 802-T-1990

INDIANA DEPARTMENT OF TRANSPORTATION

SIGN CANTILEVER STRUCTURE
DOUBLE ARM AND QUADRI-CHORD BASE PLATE, ANCHOR BOLT, AND METAL SKIRT DETAILS
SEPTEMBER 2013

STANDARD DRAWING NO. E 802-SCLS-12

ALFREDO B. HANZA REGISTERED No. 60020657 STATE OF INDIANA PROFESSIONAL ENGINEER

/s/ Alfredo B. Hanza 02/05/13
DESIGN STANDARDS ENGINEER DATE

/s/ Mark A. Miller 03/27/13
CHIEF ENGINEER DATE

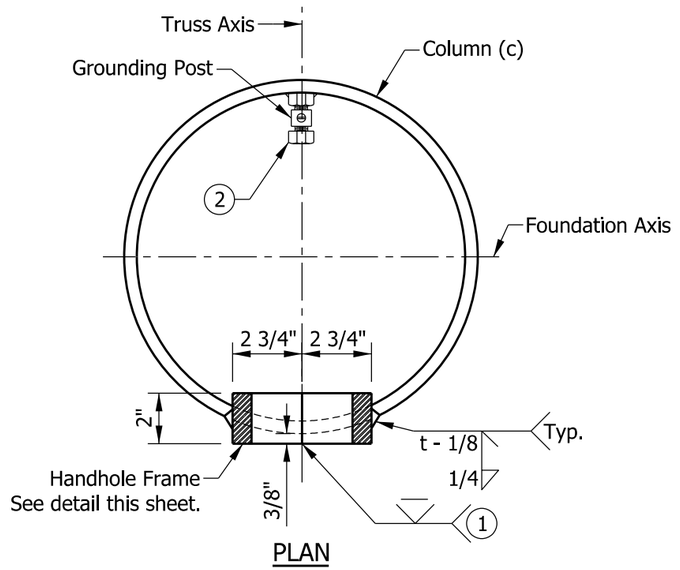

PLAN

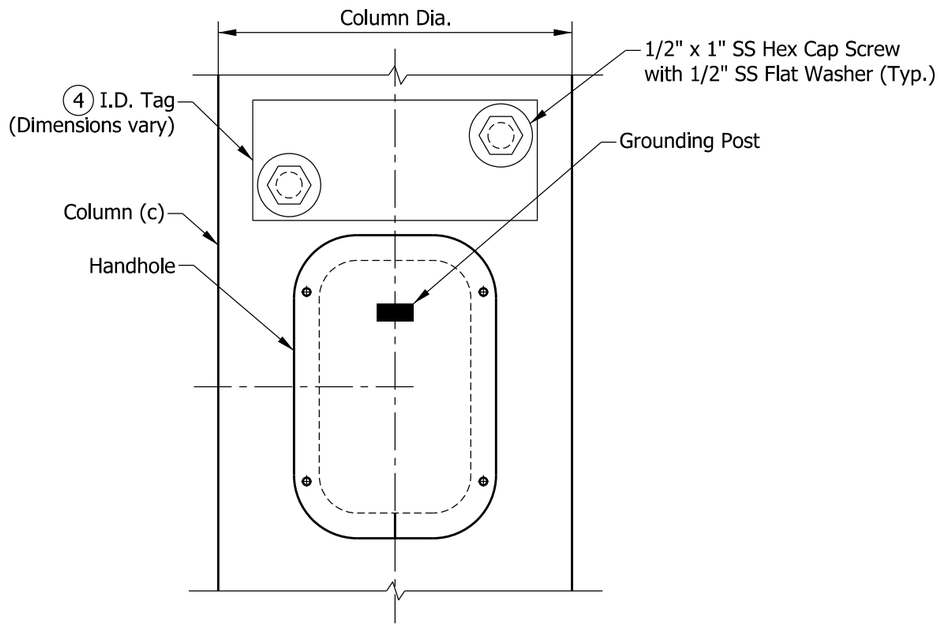

ELEVATION

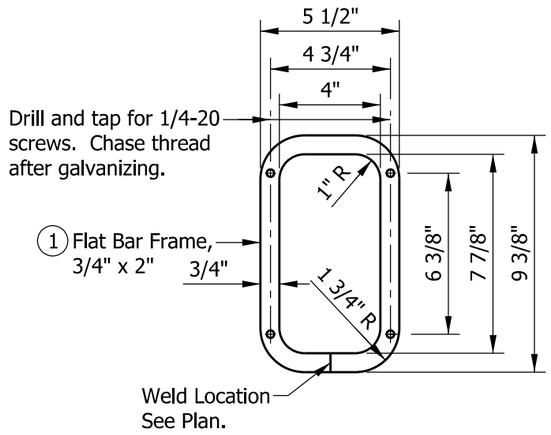

HANDHOLE FRAME

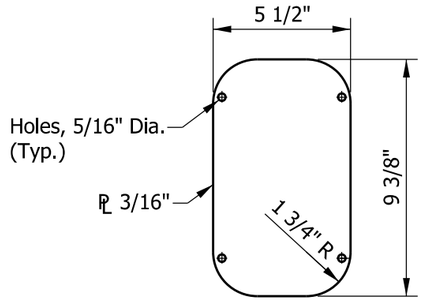

HANDHOLE COVER

NOTES:

1. In lieu of fabricated handhole frame as shown, frame may be cut from 2" plate with rolling direction vertical.
2. See Standard Drawing E 802-SNWR-03 for grounding post details. Grounding post shall be placed on far side of support directly opposite center of handhole.
3. See Standard Drawings E 802-SCLS-02 and -07 for handhole locations.
4. I.D. tag is a 1/8" stainless steel plate with the following information stamped in 1/2" black letters:

   Manufacturer _____, Drawing/Order #_____
   Contract #_____, Structure Type _____
   Fabrication Date _____, Arm Length _____
   Pole Mounting Height _____

INDIANA DEPARTMENT OF TRANSPORTATION

SIGN CANTILEVER STRUCTURE DOUBLE ARM AND QUADRI-CHORD COLUMN HANDHOLE AND I.D. TAG DETAILS

SEPTEMBER 2013

STANDARD DRAWING NO. E 802-SCLS-13

ALFREDO B. HANZA
REGISTERED
No. 60020657
STATE OF INDIANA
PROFESSIONAL ENGINEER

/s/ Alfredo B. Hanza	02/05/13
DESIGN STANDARDS ENGINEER	DATE
/s/ Mark A. Miller	03/27/13
CHIEF ENGINEER	DATE

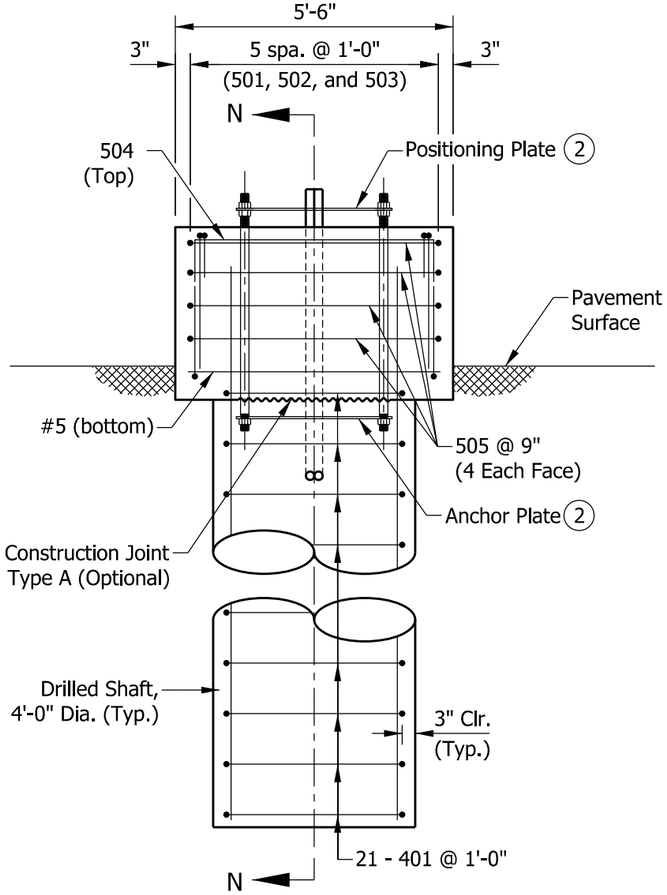

ELEVATION

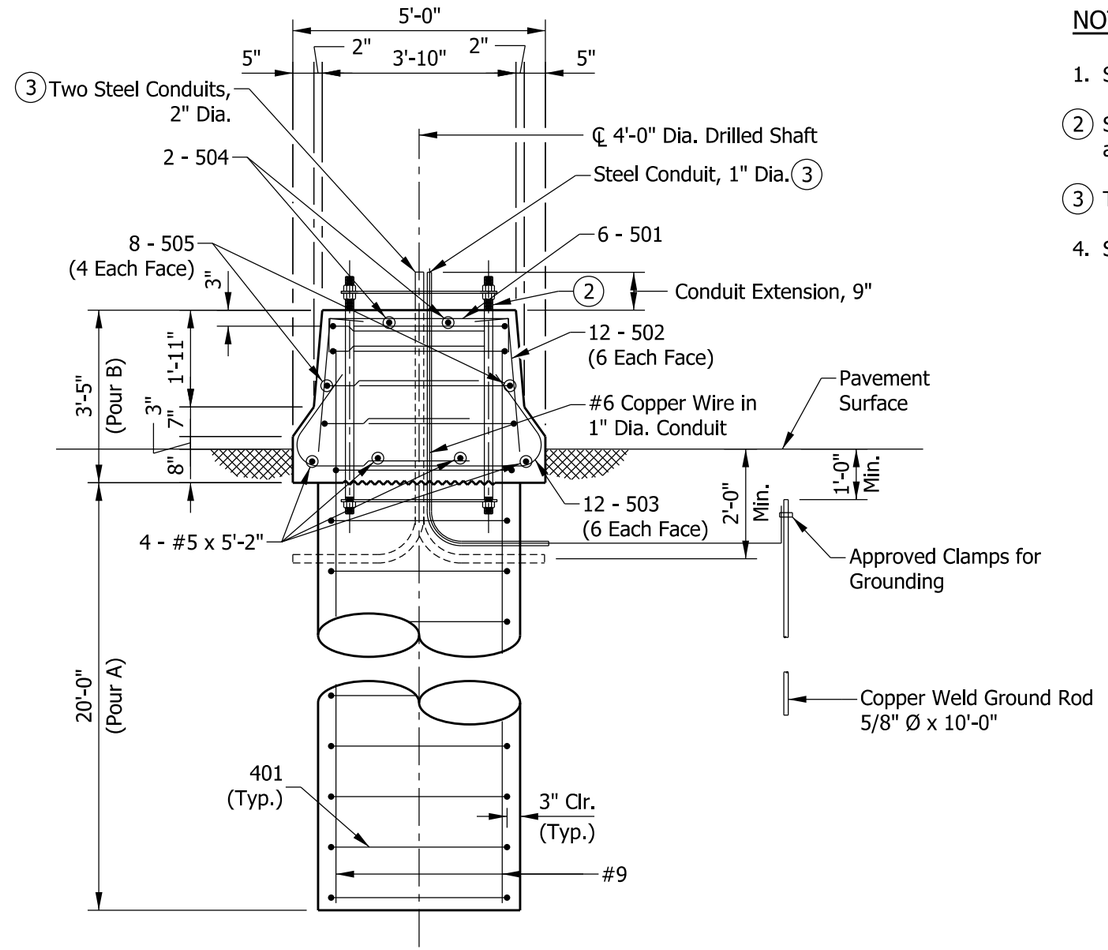

SECTION N-N

NOTES:

1. See Standard Drawing E 602-CCMB-03 for barrier wall width transition.
2. See Standard Drawing E 802-SCLS-12 for anchor and positioning plate and anchor bolt details.
3. Thread and cap both ends of steel conduit.
4. Surface seal top and sides of barrier railing to the pavement surface.

BILL OF MATERIALS			
EPOXY-COATED REINFORCING BARS			
MARK OR SIZE	NO. OF BARS	LENGTH	WEIGHT
#9	18	23'-0"	
Total #9			1408 LBS
501	6	5'-6"	
502	12	3'-4"	
503	12	5'-9"	
504	2	6'-10"	
505	8	11'-8"	
#5	4	5'-2"	
Total #5			281 LBS
401	21	12'-0"	
Total #4			168 LBS
Total Epoxy-Coated Reinforcing Bars			1857 LBS
CONCRETE, CLASS A			
Pour A			9.3 CYS
Pour B			3.0 CYS
Total Concrete, Class A			12.3 CYS
MISCELLANEOUS			
Surface Seal			5.9 SYS

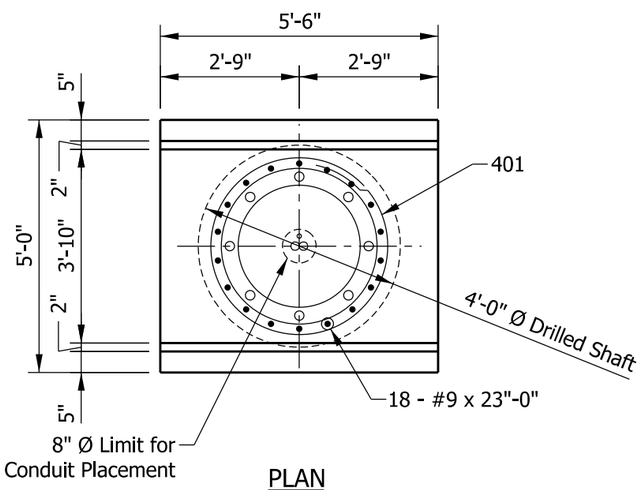

PLAN

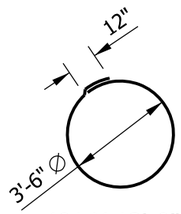

401 X 12'-0"

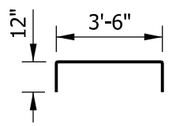

501 X 5'-6"

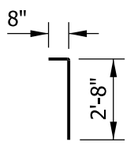

502 X 3'-4"

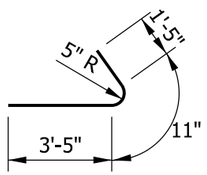

503 X 5'-9"

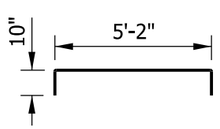

504 X 6'-10"

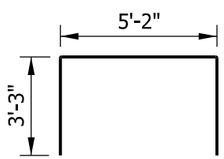

505 X 11'-8"

INDIANA DEPARTMENT OF TRANSPORTATION

SIGN CANTILEVER STRUCTURE TYPE A OR B
FOUNDATION AT 33" CONCRETE BARRIER

SEPTEMBER 2013

STANDARD DRAWING NO. E 802-SCLS-14

ALFREDO B. HANZA
REGISTERED
No. 60020657
STATE OF INDIANA
PROFESSIONAL ENGINEER

/s/ Alfredo B. Hanza — 02/05/13
DESIGN STANDARDS ENGINEER — DATE

/s/ Mark A. Miller — 03/27/13
CHIEF ENGINEER — DATE

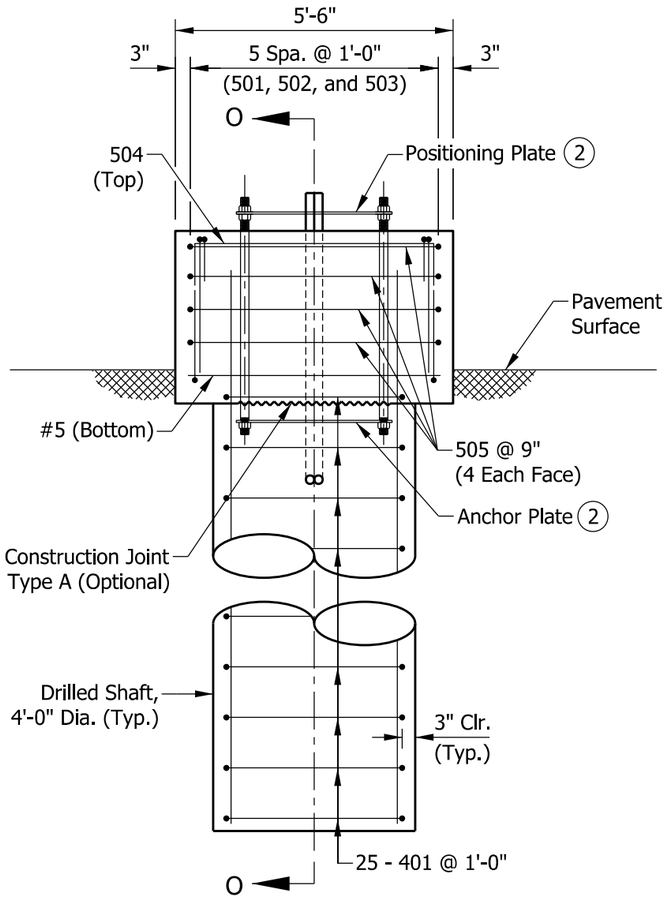

ELEVATION

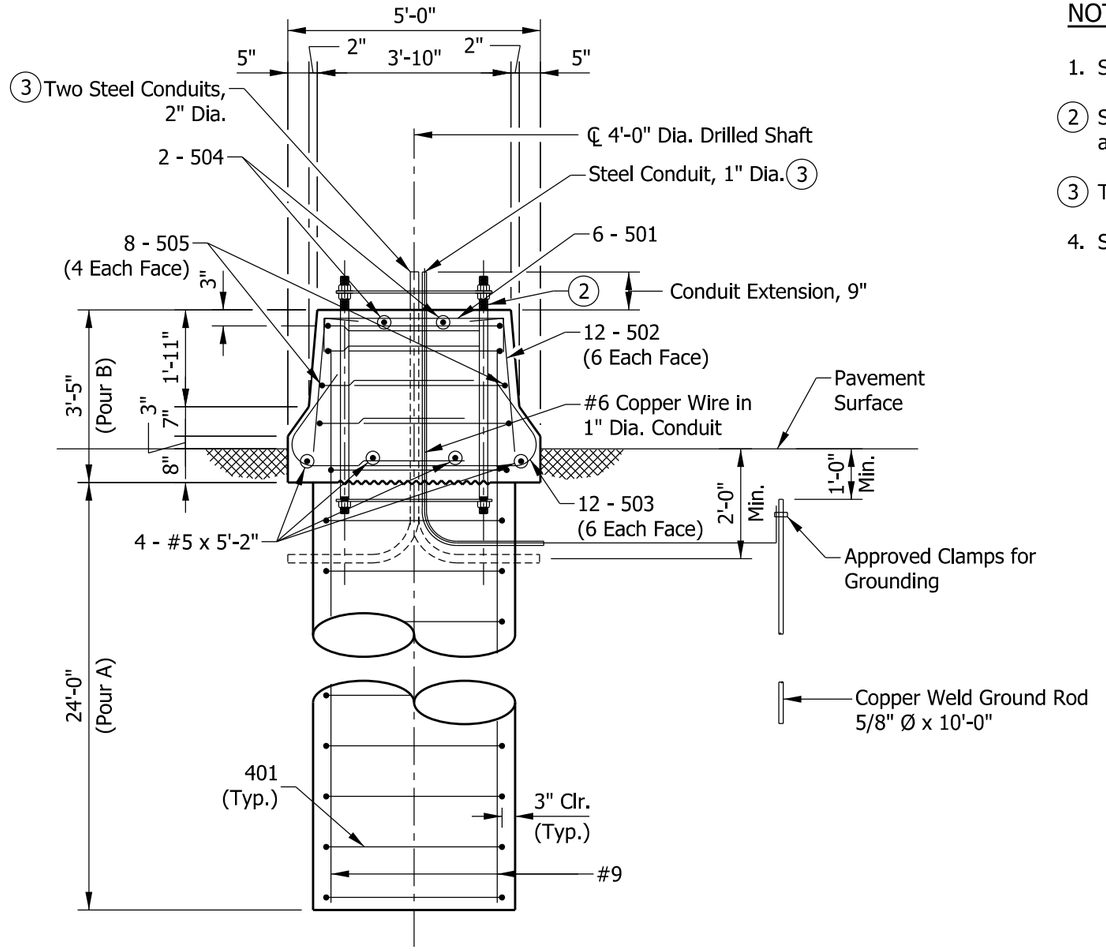

SECTION O-O

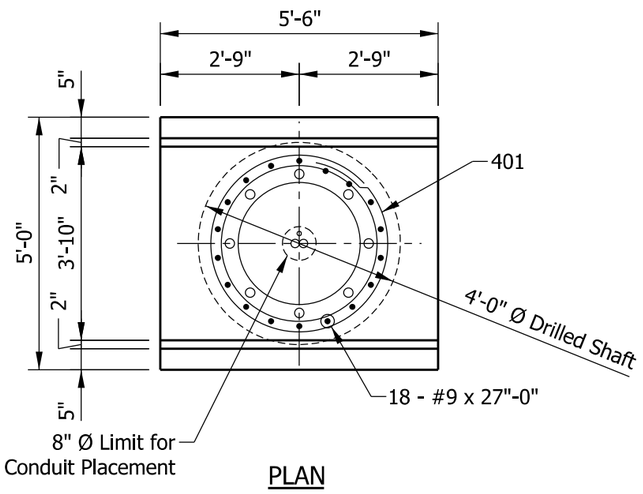

PLAN

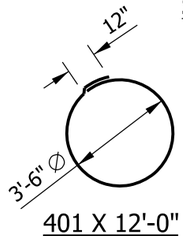

401 X 12'-0"

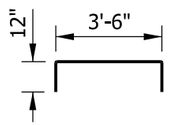

501 X 5'-6"

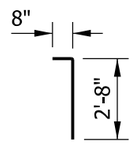

502 X 3'-4"

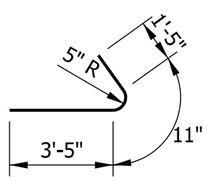

503 X 5'-9"

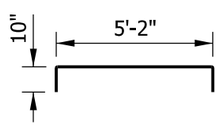

504 X 6'-10"

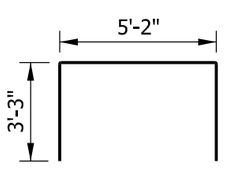

505 X 11'-8"

NOTES:

1. See Standard Drawing E 602-CCMB-03 for barrier wall width transition.
2. See Standard Drawing E 802-SCLS-12 for anchor and positioning plate and anchor bolt details.
3. Thread and cap both ends of steel conduit.
4. Surface seal top and sides of barrier railing to the pavement surface.

BILL OF MATERIALS			
EPOXY-COATED REINFORCING BARS			
MARK OR SIZE	NO. OF BARS	LENGTH	WEIGHT
#9	18	27'-0"	
Total #9			1652 LBS
501	6	5'-6"	
502	12	3'-4"	
503	12	5'-9"	
504	2	6'-10"	
505	8	11'-8"	
#5	4	5'-2"	
Total #5			281 LBS
401	25	12'-0"	
Total #4			200 LBS
Total Epoxy-Coated Reinforcing Bars			2133 LBS
CONCRETE, CLASS A			
Pour A			11.2 CYS
Pour B			3.0 CYS
Total Concrete, Class A			14.2 CYS
MISCELLANEOUS			
Surface Seal			5.9 SYS

INDIANA DEPARTMENT OF TRANSPORTATION

SIGN CANTILEVER STRUCTURE TYPE C, D, E, OR F FOUNDATION AT 33" CONCRETE BARRIER

SEPTEMBER 2013

STANDARD DRAWING NO. E 802-SCLS-15

ALFREDO B. HANZA
REGISTERED
No. 60020657
STATE OF INDIANA
PROFESSIONAL ENGINEER

/s/ Alfredo B. Hanza 02/05/13
DESIGN STANDARDS ENGINEER DATE

/s/ Mark A. Miller 03/27/13
CHIEF ENGINEER DATE

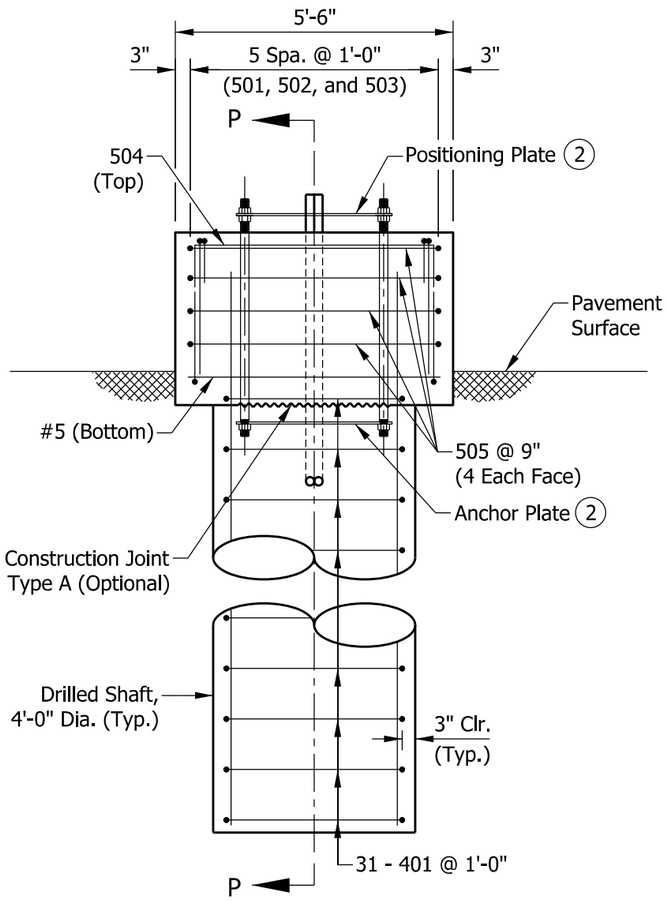

ELEVATION

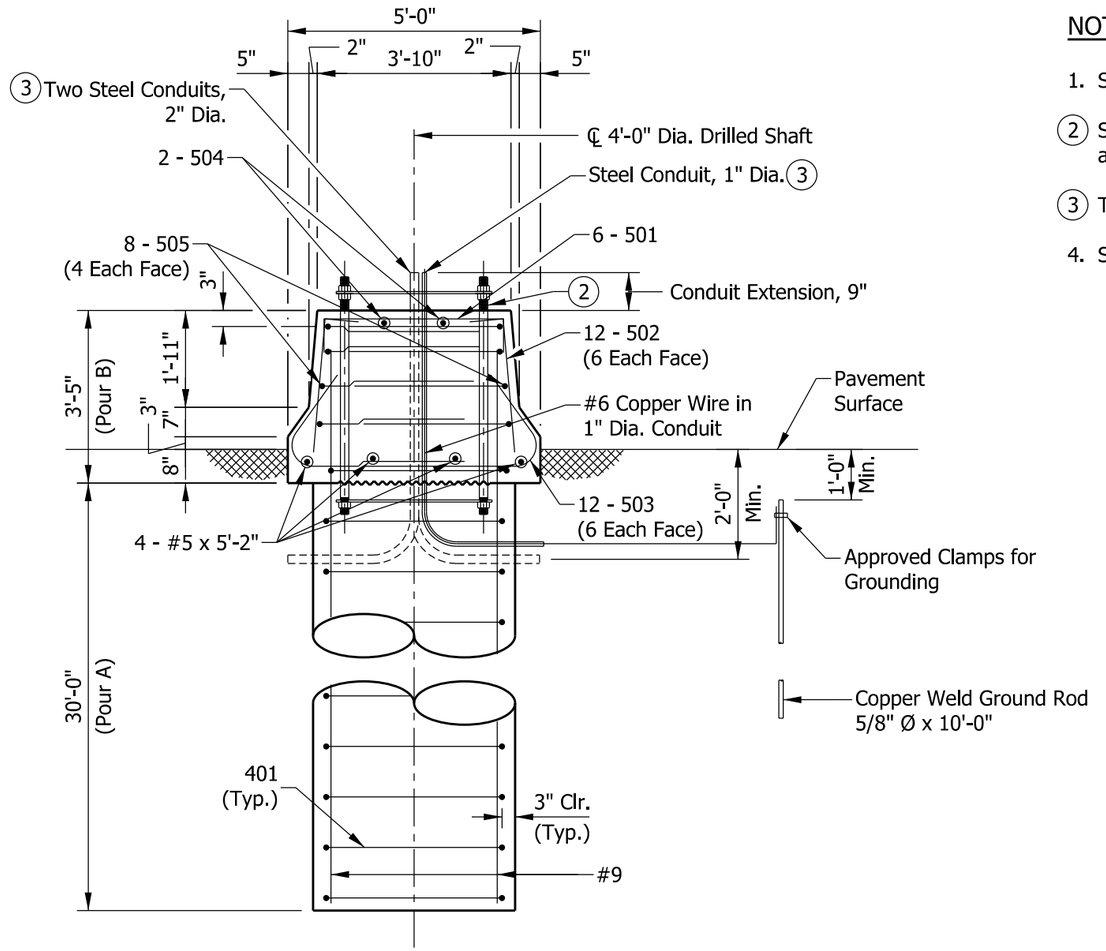

SECTION P-P

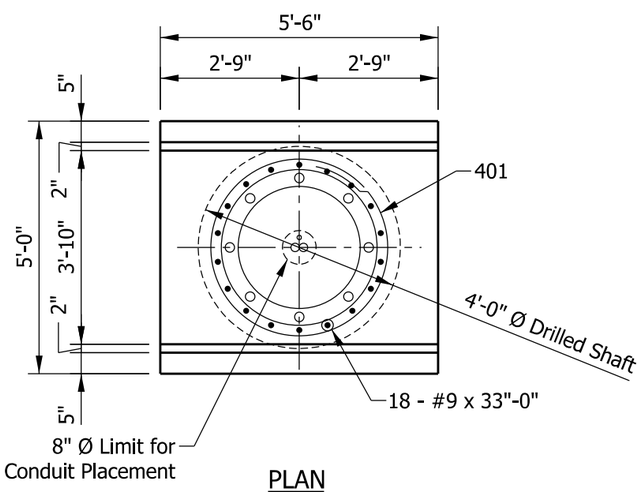

PLAN

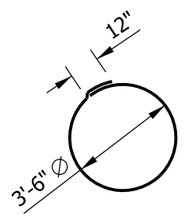

401 X 12'-0"

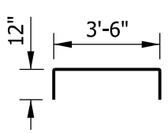

501 X 5'-6"

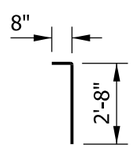

502 X 3'-4"

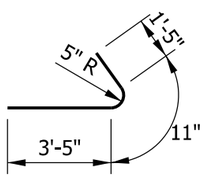

503 X 5'-9"

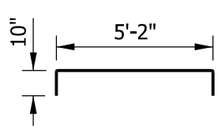

504 X 6'-10"

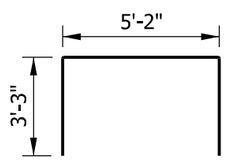

505 X 11'-8"

NOTES:

1. See Standard Drawing E 602-CCMB-03 for barrier wall width transition.
2. See Standard Drawing E 802-SCLS-12 for anchor and positioning plate and anchor bolt details.
3. Thread and cap both ends of steel conduit.
4. Surface seal top and sides of barrier railing to the pavement surface.

BILL OF MATERIALS			
EPOXY-COATED REINFORCING BARS			
MARK OR SIZE	NO. OF BARS	LENGTH	WEIGHT
#9	18	33'-0"	
Total #9			2020 LBS
501	6	5'-6"	
502	12	3'-4"	
503	12	5'-9"	
504	2	6'-10"	
505	8	11'-8"	
#5	4	5'-2"	
Total #5			281 LBS
401	31	12'-0"	
Total #4			248 LBS
Total Epoxy-Coated Reinforcing Bars			2549 LBS
CONCRETE, CLASS A			
Pour A			14.0 CYS
Pour B			3.0 CYS
Total Concrete, Class A			17.0 CYS
MISCELLANEOUS			
Surface Seal			5.9 SYS

INDIANA DEPARTMENT OF TRANSPORTATION

SIGN CANTILEVER STRUCTURE TYPE G, H, OR I FOUNDATION AT 33" CONCRETE BARRIER

SEPTEMBER 2013

STANDARD DRAWING NO. E 802-SCLS-16

ALFREDO B. HANZA
REGISTERED
No. 60020657
STATE OF INDIANA
PROFESSIONAL ENGINEER

/s/ Alfredo B. Hanza — 03/26/13
DESIGN STANDARDS ENGINEER — DATE

/s/ Mark A. Miller — 03/27/13
CHIEF ENGINEER — DATE

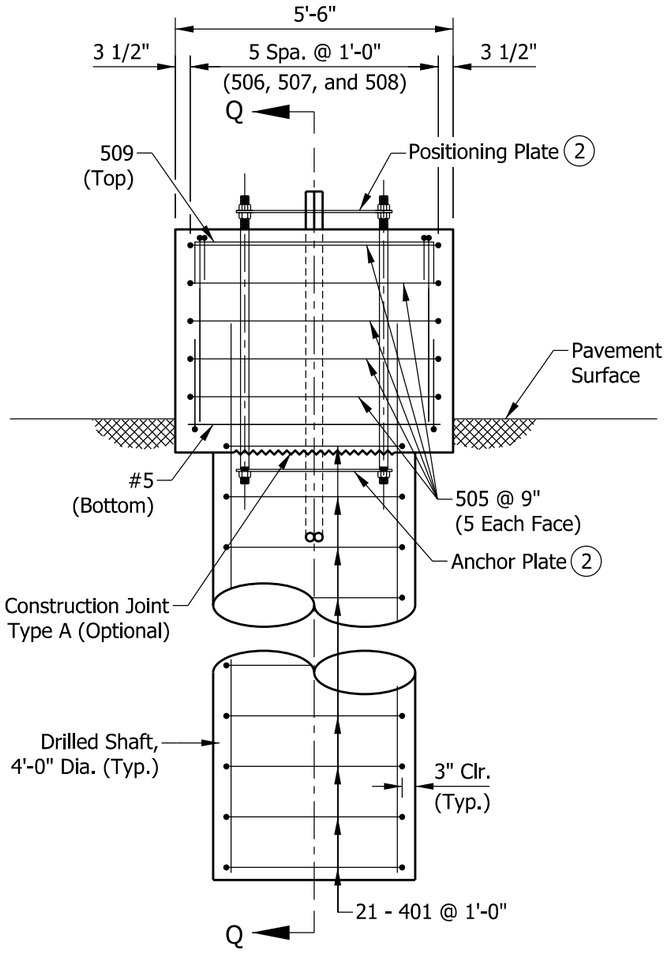

ELEVATION

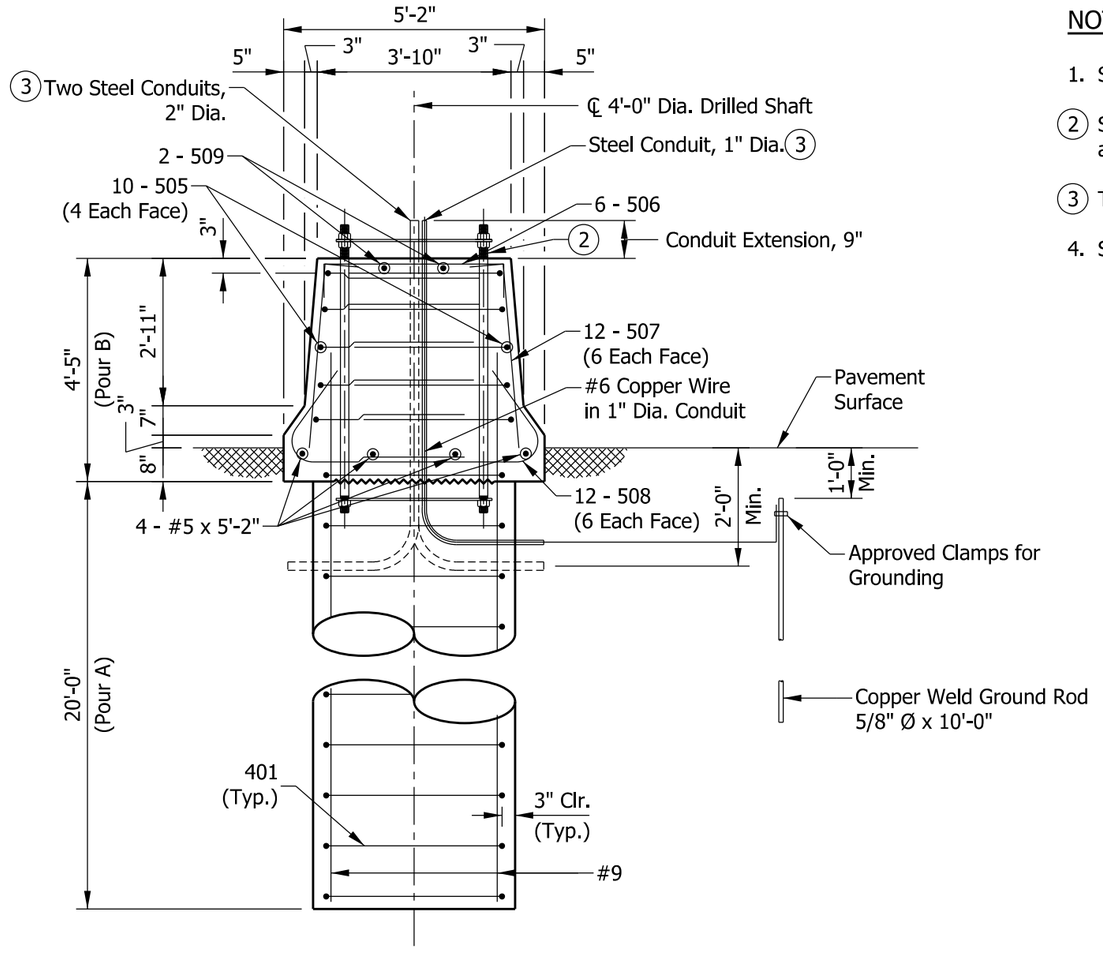

SECTION Q-Q

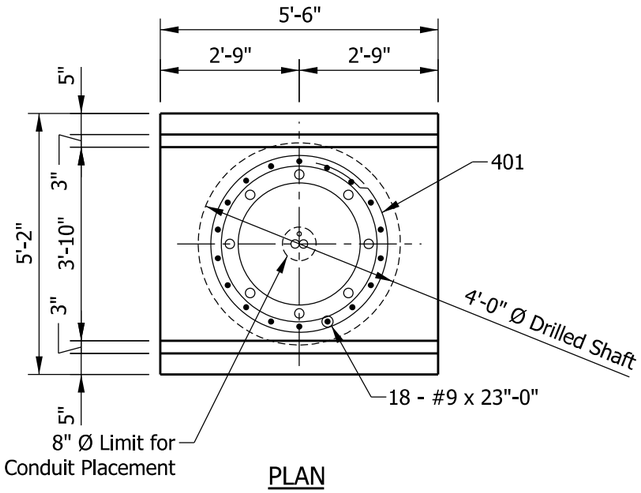

PLAN

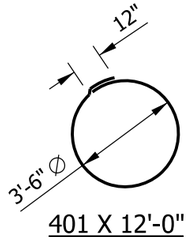

401 X 12'-0"

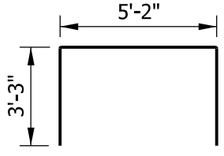

505 X 11'-8"

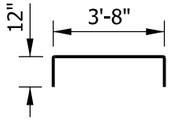

506 X 5'-8"

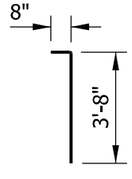

507 X 4'-4"

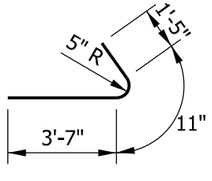

508 X 5'-11"

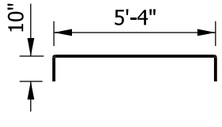

509 X 7'-0"

NOTES:

1. See Standard Drawing E 602-CCMB-03 for barrier wall width transition.
2. See Standard Drawing E 802-SCLS-12 for anchor and positioning plate and anchor bolt details.
3. Thread and cap both ends of steel conduit.
4. Surface seal top and sides of barrier railing to the pavement surface.

BILL OF MATERIALS			
EPOXY-COATED REINFORCING BARS			
MARK OR SIZE	NO. OF BARS	LENGTH	WEIGHT
#9	18	23'-0"	
Total #9			1408 LBS
505	10	11'-8"	
506	6	5'-8"	
507	12	4'-4"	
508	12	5'-11"	
509	2	7'-0"	
#5	4	5'-2"	
Total #5			322 LBS
401	21	12'-0"	
Total #4			168 LBS
Total Epoxy-Coated Reinforcing Bars			1898 LBS
CONCRETE, CLASS A			
Pour A			9.3 CYS
Pour B			4.0 CYS
Total Concrete, Class A			13.3 CYS
MISCELLANEOUS			
Surface Seal			7.1 SYS

INDIANA DEPARTMENT OF TRANSPORTATION

SIGN CANTILEVER STRUCTURE TYPE A OR B FOUNDATION AT 45" CONCRETE BARRIER

SEPTEMBER 2013

STANDARD DRAWING NO. E 802-SCLS-17

ALFREDO B. HANZA
REGISTERED
No. 60020657
STATE OF INDIANA
PROFESSIONAL ENGINEER

/s/ Alfredo B. Hanza — 02/05/13
DESIGN STANDARDS ENGINEER — DATE

/s/ Mark A. Miller — 03/27/13
CHIEF ENGINEER — DATE

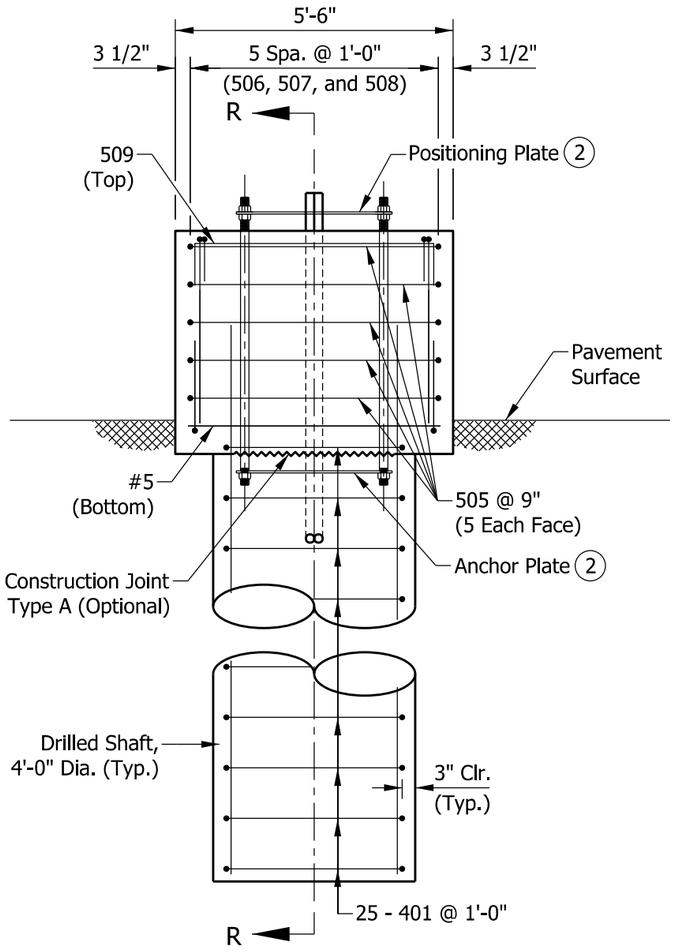

ELEVATION

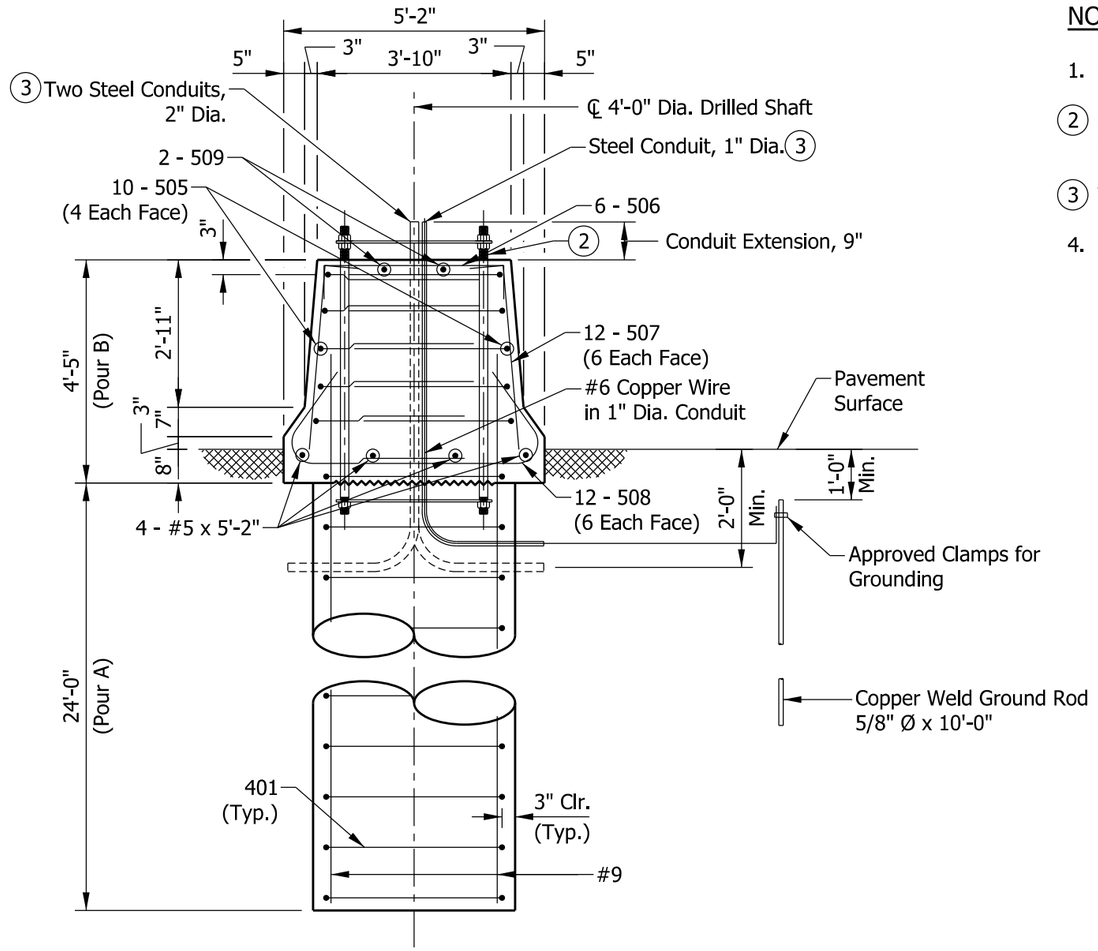

SECTION R-R

NOTES:

1. See Standard Drawing E 602-CCMB-03 for barrier wall width transition.
2. See Standard Drawing E 802-SCLS-12 for anchor and positioning plate and anchor bolt details.
3. Thread and cap both ends of steel conduit.
4. Surface seal top and sides of barrier railing to the pavement surface.

BILL OF MATERIALS			
EPOXY-COATED REINFORCING BARS			
MARK OR SIZE	NO. OF BARS	LENGTH	WEIGHT
#9	18	27'-0"	
Total #9			1652 LBS
505	10	11'-8"	
506	6	5'-8"	
507	12	4'-4"	
508	12	5'-11"	
509	2	7'-0"	
#5	4	5'-2"	
Total #5			322 LBS
401	25	12'-0"	
Total #4			200 LBS
Total Epoxy-Coated Reinforcing Bars			1848 LBS
CONCRETE, CLASS A			
Pour A			11.2 CYS
Pour B			4.0 CYS
Total Concrete, Class A			15.2 CYS
MISCELLANEOUS			
Surface Seal			7.1 SYS

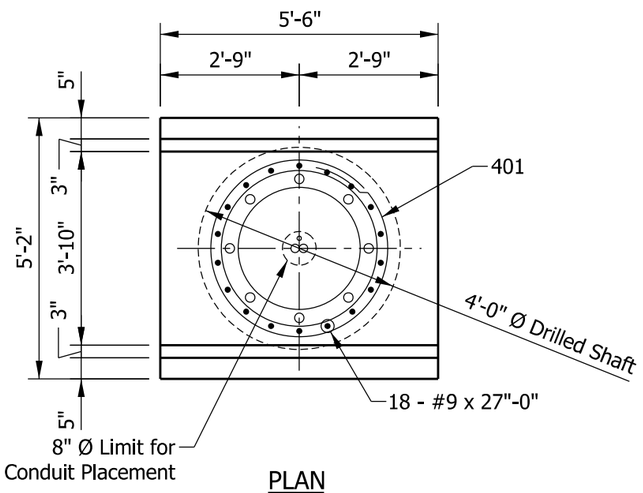

PLAN

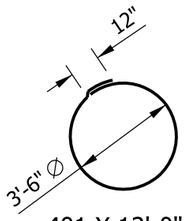

401 X 12'-0"

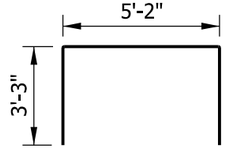

505 X 11'-8"

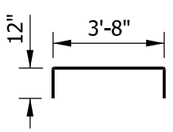

506 X 5'-8"

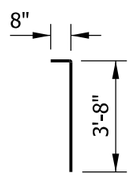

507 X 4'-4"

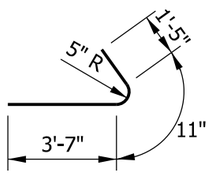

508 X 5'-11"

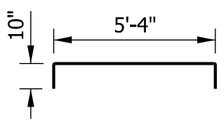

509 X 7'-0"

INDIANA DEPARTMENT OF TRANSPORTATION

SIGN CANTILEVER STRUCTURE TYPE C, D, E, OR F
FOUNDATION AT 45" CONCRETE BARRIER

SEPTEMBER 2013

STANDARD DRAWING NO. E 802-SCLS-18

ALFREDO B. HANZA
REGISTERED
No. 60020657
STATE OF INDIANA
PROFESSIONAL ENGINEER

/s/ Alfredo B. Hanza — 02/05/13
DESIGN STANDARDS ENGINEER — DATE

/s/ Mark A. Miller — 03/27/13
CHIEF ENGINEER — DATE

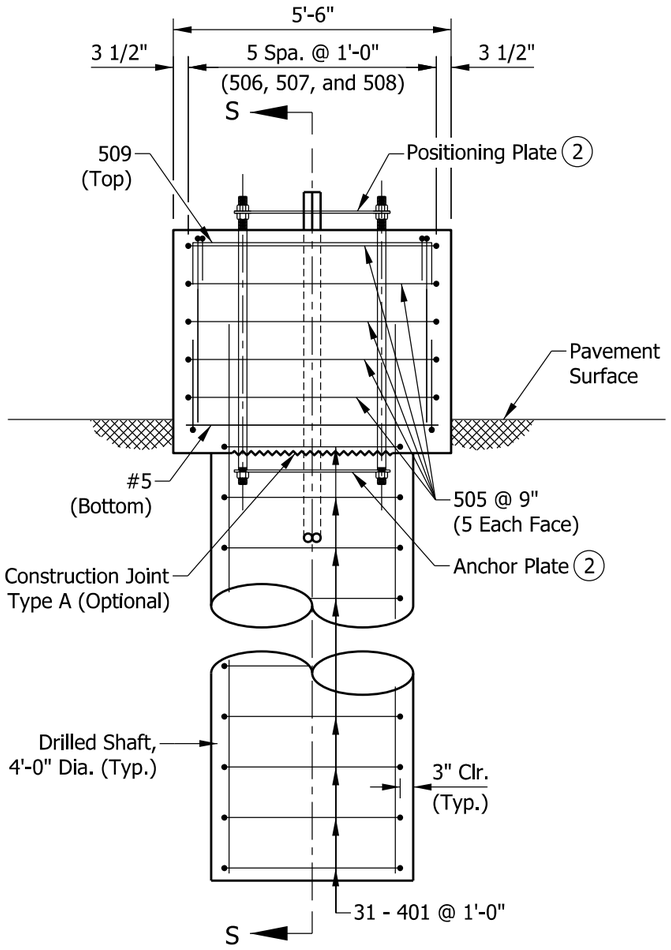

ELEVATION

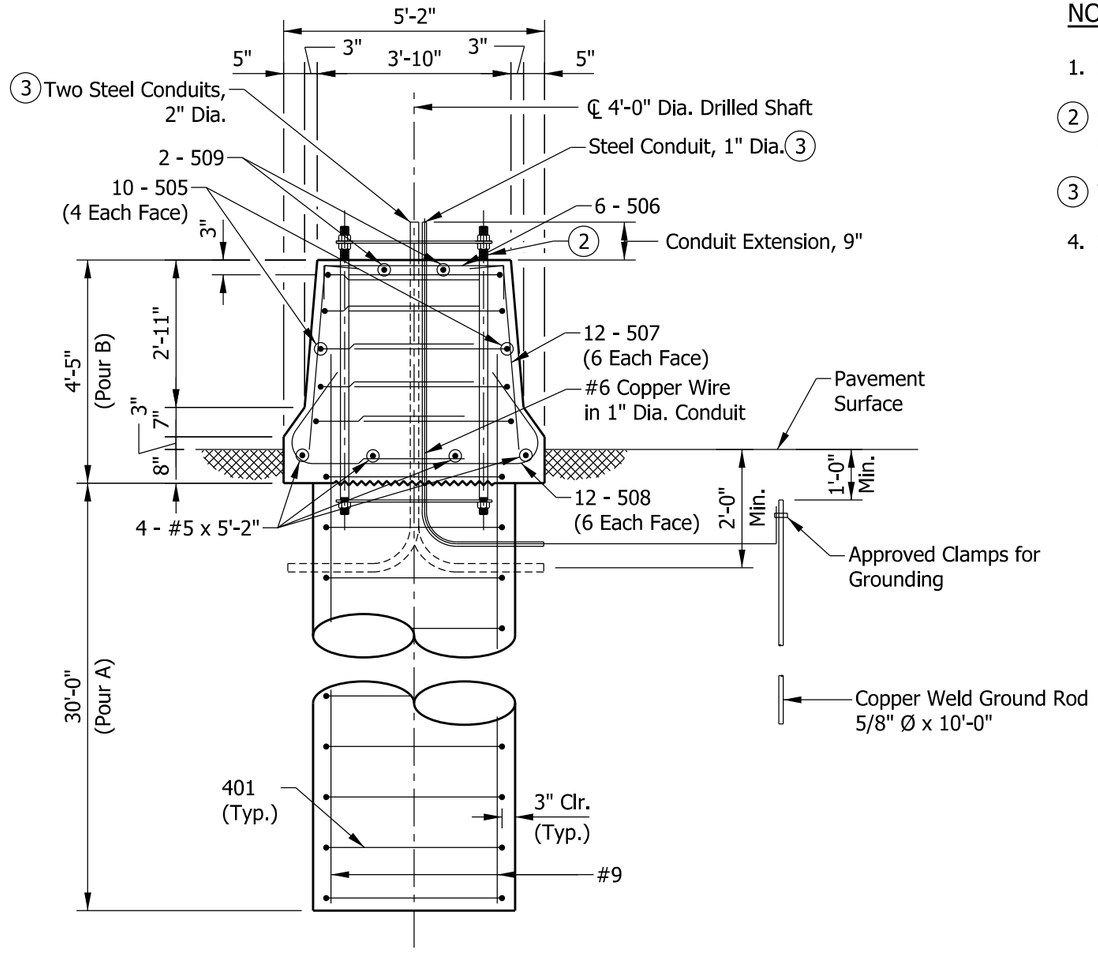

SECTION S-S

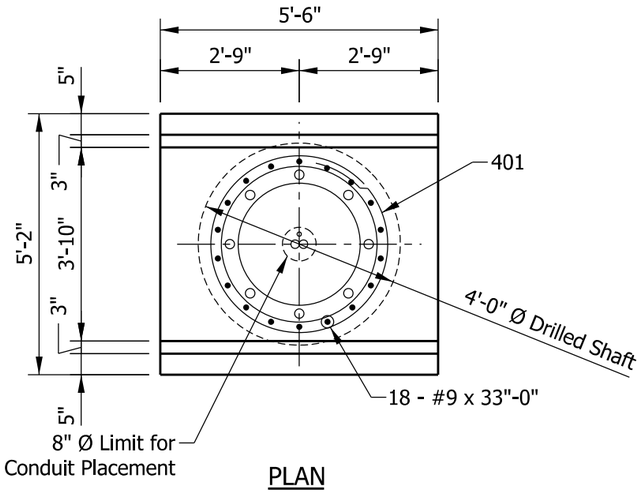

PLAN

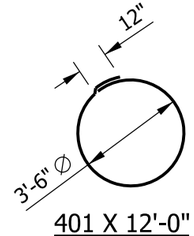

401 X 12'-0"

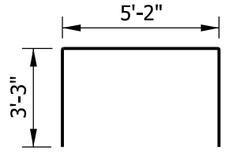

505 X 11'-8"

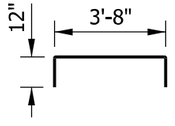

506 X 5'-8"

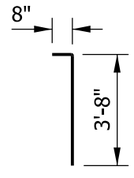

507 X 4'-4"

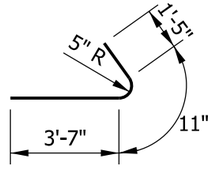

508 X 5'-11"

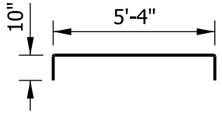

509 X 7'-0"

NOTES:

1. See Standard Drawing E 602-CCMB-03 for barrier wall width transition.
2. See Standard Drawing E 802-SCLS-12 for anchor and positioning plate and anchor bolt details.
3. Thread and cap both ends of steel conduit.
4. Surface seal top and sides of barrier railing to the pavement surface.

BILL OF MATERIALS			
EPOXY-COATED REINFORCING BARS			
MARK OR SIZE	NO. OF BARS	LENGTH	WEIGHT
#9	18	33'-0"	
Total #9			2020 LBS
505	10	11'-8"	
506	6	5'-8"	
507	12	4'-4"	
508	12	5'-11"	
509	2	7'-0"	
#5	4	5'-2"	
Total #5			322 LBS
401	31	12'-0"	
Total #4			248 LBS
Total Epoxy-Coated Reinforcing Bars			2698 LBS
CONCRETE, CLASS A			
Pour A			13.9 CYS
Pour B			4.0 CYS
Total Concrete, Class A			17.9 CYS
MISCELLANEOUS			
Surface Seal			7.1 SYS

INDIANA DEPARTMENT OF TRANSPORTATION

SIGN CANTILEVER STRUCTURE TYPE G, H, OR I FOUNDATION AT 45" CONCRETE BARRIER

SEPTEMBER 2013

STANDARD DRAWING NO. E 802-SCLS-19

ALFREDO B. HANZA
REGISTERED
No. 60020657
STATE OF INDIANA
PROFESSIONAL ENGINEER

/s/ Alfredo B. Hanza — 02/05/13
DESIGN STANDARDS ENGINEER — DATE

/s/ Mark A. Miller — 03/27/13
CHIEF ENGINEER — DATE

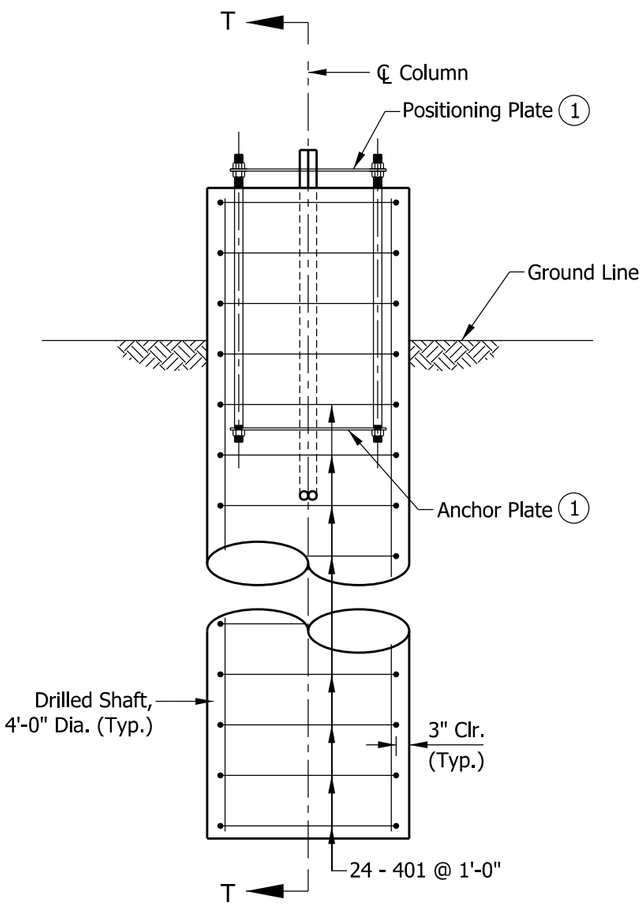

ELEVATION

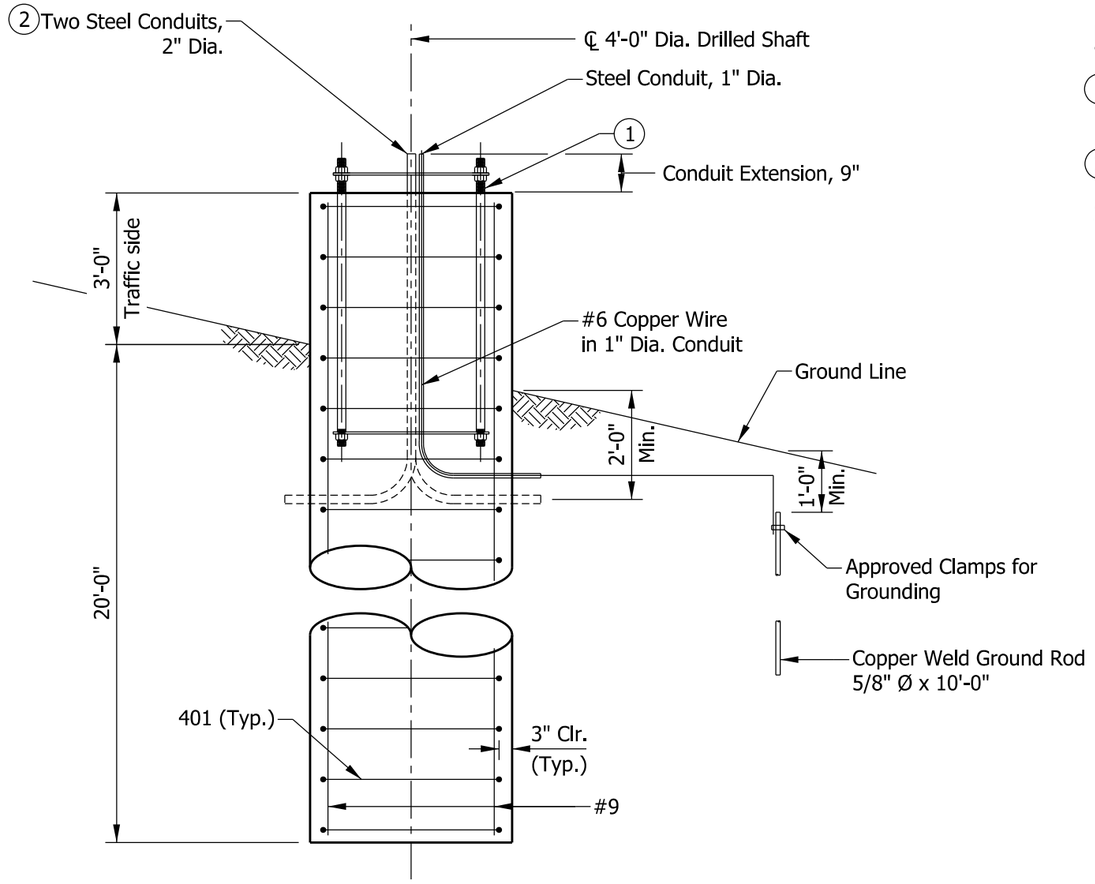

SECTION T-T

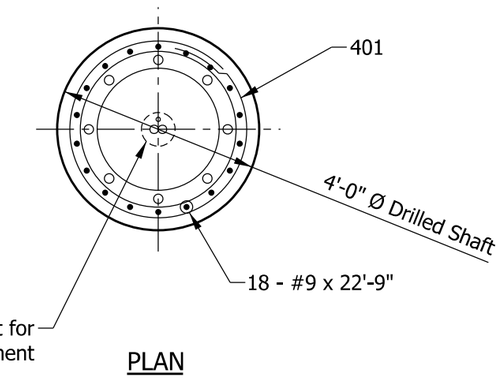

PLAN

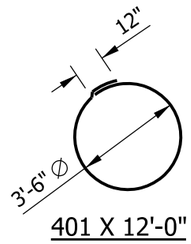

401 X 12'-0"

NOTES:

(1) See Standard Drawing E 802-SCLS-12 for anchor and positioning plate and anchor bolt details.

(2) Thread and cap both ends of steel conduit.

3. Surface seal top and sides of foundation to the ground surface.

BILL OF MATERIALS			
EPOXY-COATED REINFORCING BARS			
MARK OR SIZE	NO. OF BARS	LENGTH	WEIGHT
#9	18	22'-9"	
Total #9			1392 LBS
401	24	12'-0"	
Total #4			192 LBS
Total Epoxy-Coated Reinforcing Bars			1584 LBS
MISCELLANEOUS			
Concrete, Class A			10.7 CYS
Surface Seal			4.3 SYS

INDIANA DEPARTMENT OF TRANSPORTATION

SIGN CANTILEVER STRUCTURE TYPE A OR B FOUNDATION, 36" HEIGHT

SEPTEMBER 2013

STANDARD DRAWING NO. E 802-SCLS-20

ALFREDO B. HANZA
REGISTERED
No. 60020657
STATE OF INDIANA
PROFESSIONAL ENGINEER

/s/ Alfredo B. Hanza 02/05/13
DESIGN STANDARDS ENGINEER DATE

/s/ Mark A. Miller 03/27/13
CHIEF ENGINEER DATE

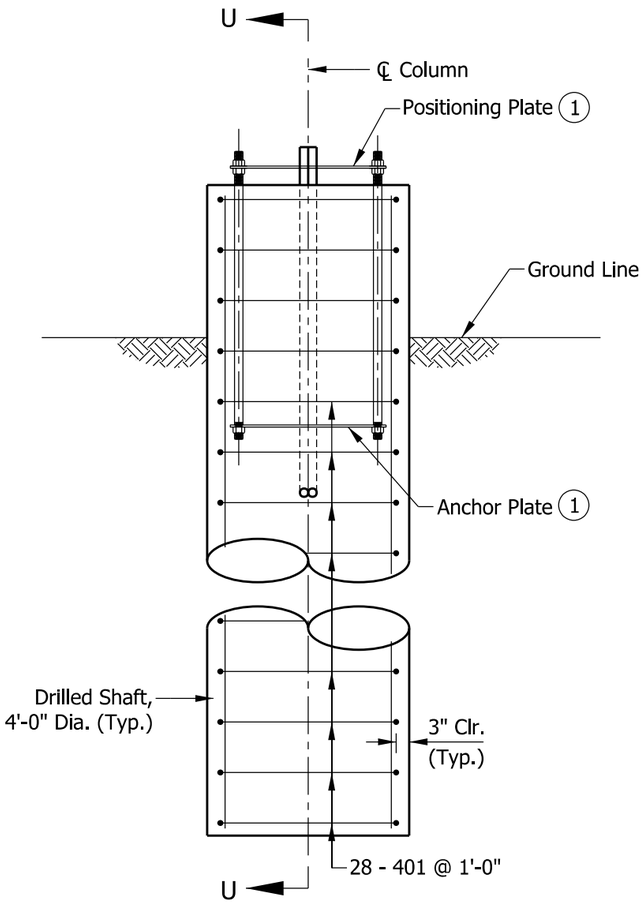

ELEVATION

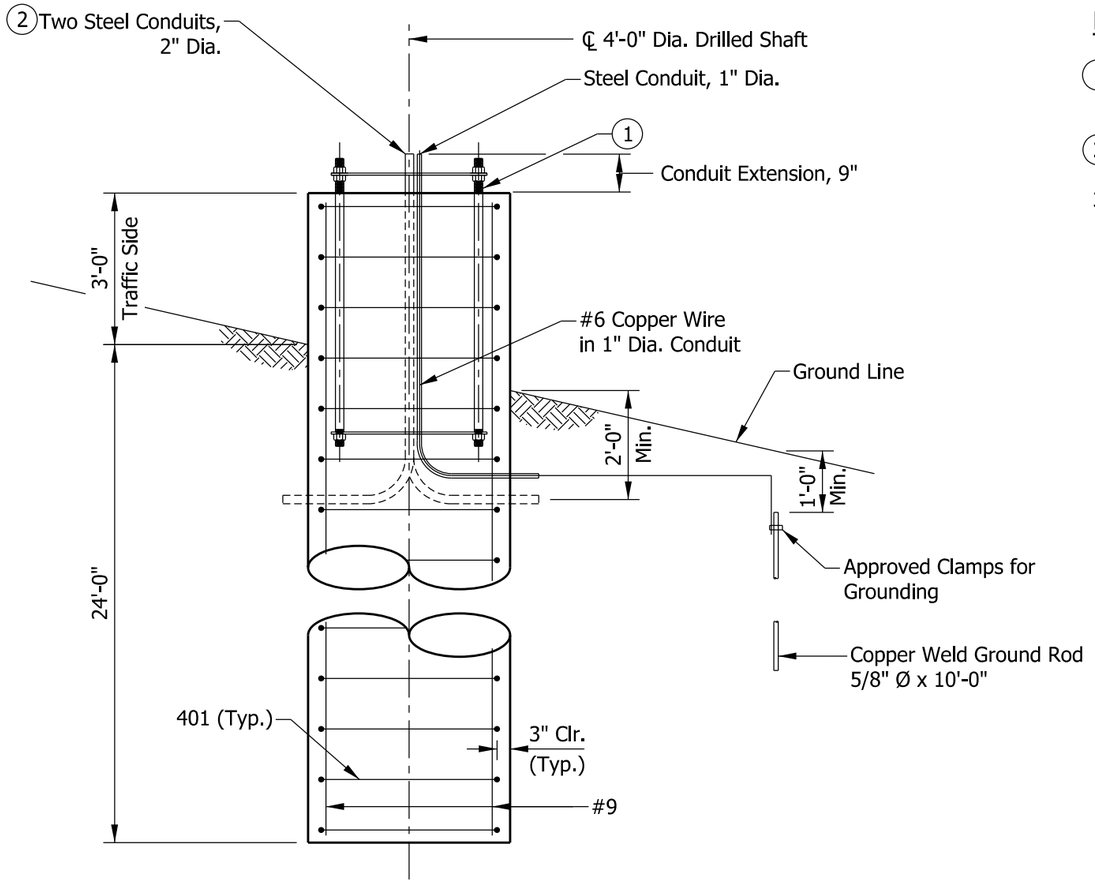

SECTION U-U

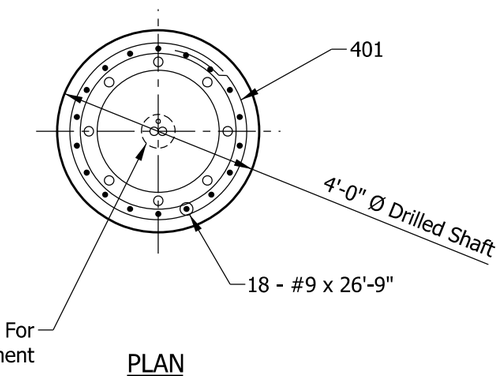

PLAN

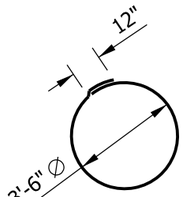

401 X 12'-0"

NOTES:

(1) See Standard Drawing E 802-SCLS-12 for anchor and positioning plate and anchor bolt details.

(2) Thread and cap both ends of steel conduit.

3. Surface seal top and sides of foundation to the ground surface.

BILL OF MATERIALS			
EPOXY-COATED REINFORCING BARS			
MARK OR SIZE	NO. OF BARS	LENGTH	WEIGHT
#9	18	26'-9"	
Total #9			1637 LBS
401	28	12'-0"	
Total #4			224 LBS
Total Epoxy-Coated Reinforcing Bars			1861 LBS
MISCELLANEOUS			
Concrete, Class A			12.6 CYS
Surface Seal			4.3 SYS

INDIANA DEPARTMENT OF TRANSPORTATION

SIGN CANTILEVER STRUCTURE TYPE C, D, E, OR F FOUNDATION, 36" HEIGHT

SEPTEMBER 2013

STANDARD DRAWING NO. E 802-SCLS-21

ALFREDO B. HANZA
REGISTERED
No. 60020657
STATE OF INDIANA
PROFESSIONAL ENGINEER

/s/ Alfredo B. Hanza 02/05/13
DESIGN STANDARDS ENGINEER DATE

/s/ Mark A. Miller 03/27/13
CHIEF ENGINEER DATE

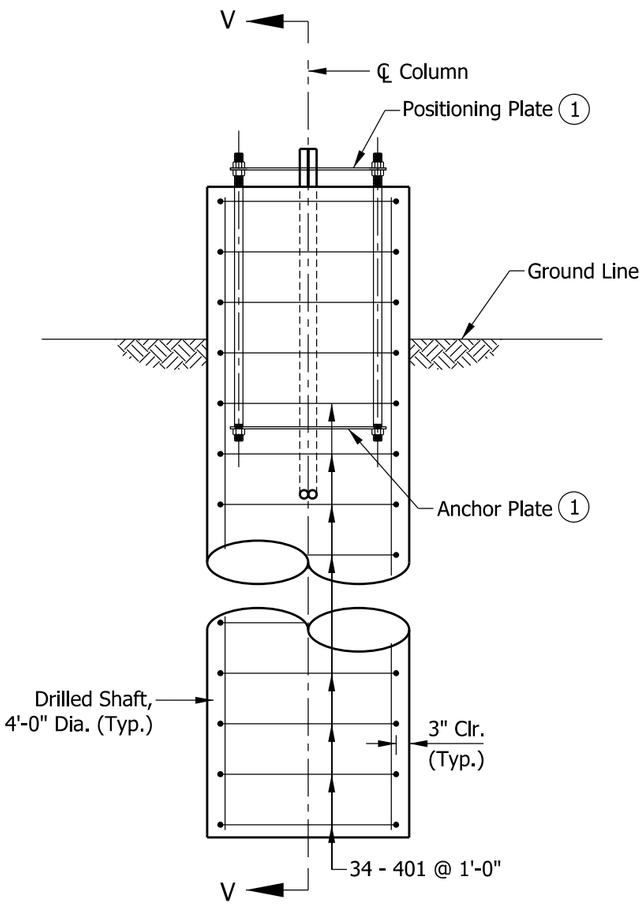

ELEVATION

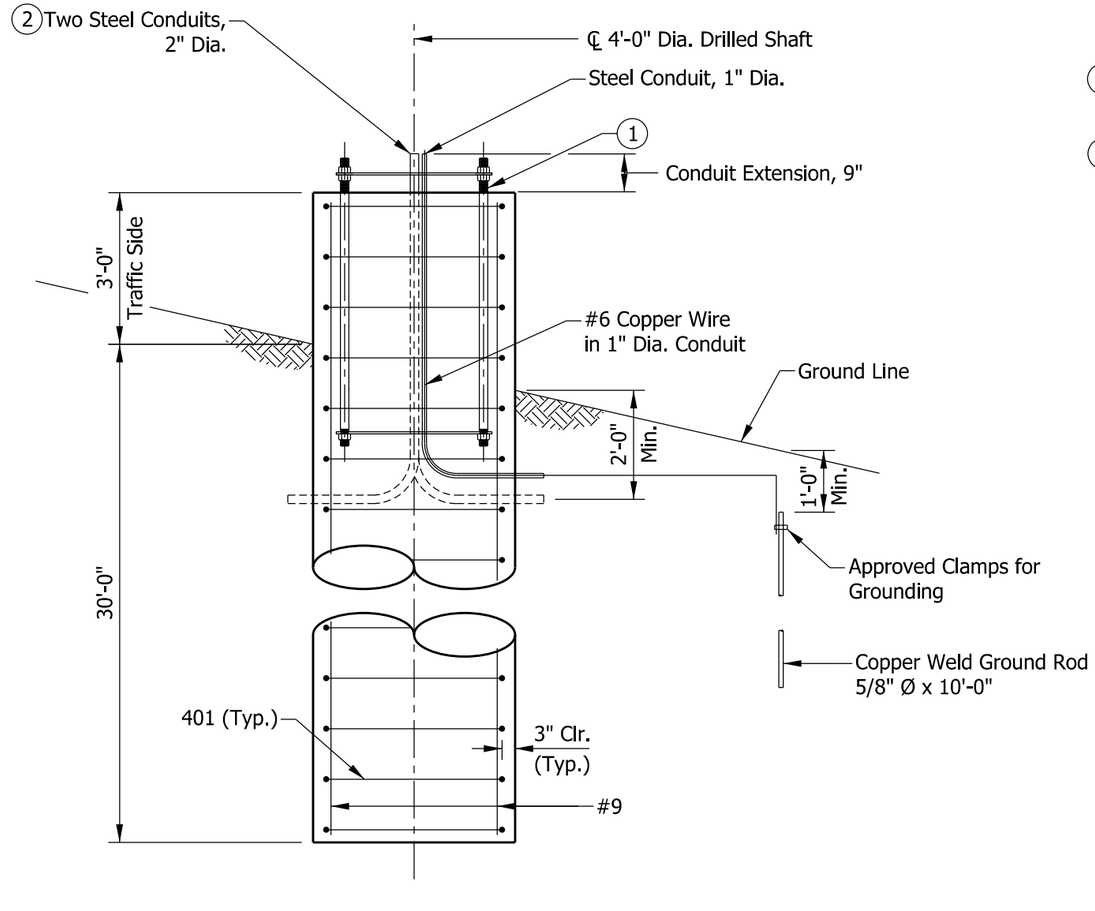

SECTION V-V

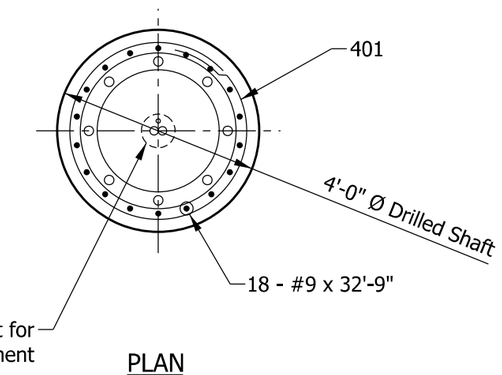

PLAN

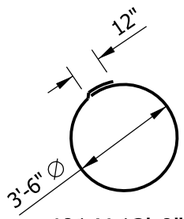

401 X 12'-0"

NOTES:

(1) See Standard Drawing E 802-SCLS-12 for anchor and positioning plate and anchor bolt details.

(2) Thread and cap both ends of steel conduit.

3. Surface seal top and sides of foundation to the ground surface.

BILL OF MATERIALS			
EPOXY-COATED REINFORCING BARS			
MARK OR SIZE	NO. OF BARS	LENGTH	WEIGHT
#9	18	32'-9"	
Total #9			2004 LBS
401	34	12'-0"	
Total #4			273 LBS
Total Epoxy-Coated Reinforcing Bars			2277 LBS
MISCELLANEOUS			
Concrete, Class A			15.4 CYS
Surface Seal			4.3 SYS

INDIANA DEPARTMENT OF TRANSPORTATION

SIGN CANTILEVER STRUCTURE TYPE G, H, OR I FOUNDATION, 36" HEIGHT

SEPTEMBER 2013

STANDARD DRAWING NO. E 802-SCLS-22

ALFREDO B. HANZA
REGISTERED
No. 60020657
STATE OF INDIANA
PROFESSIONAL ENGINEER

/s/ Alfredo B. Hanza 02/05/13
DESIGN STANDARDS ENGINEER DATE

/s/ Mark A. Miller 03/27/13
CHIEF ENGINEER DATE

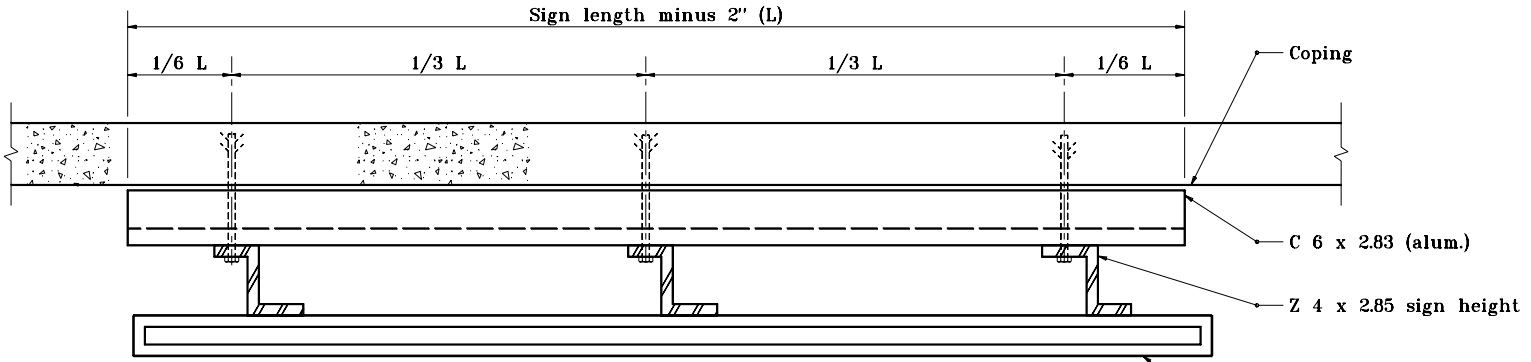

PLAN (TYPE A)
0° CONNECTION

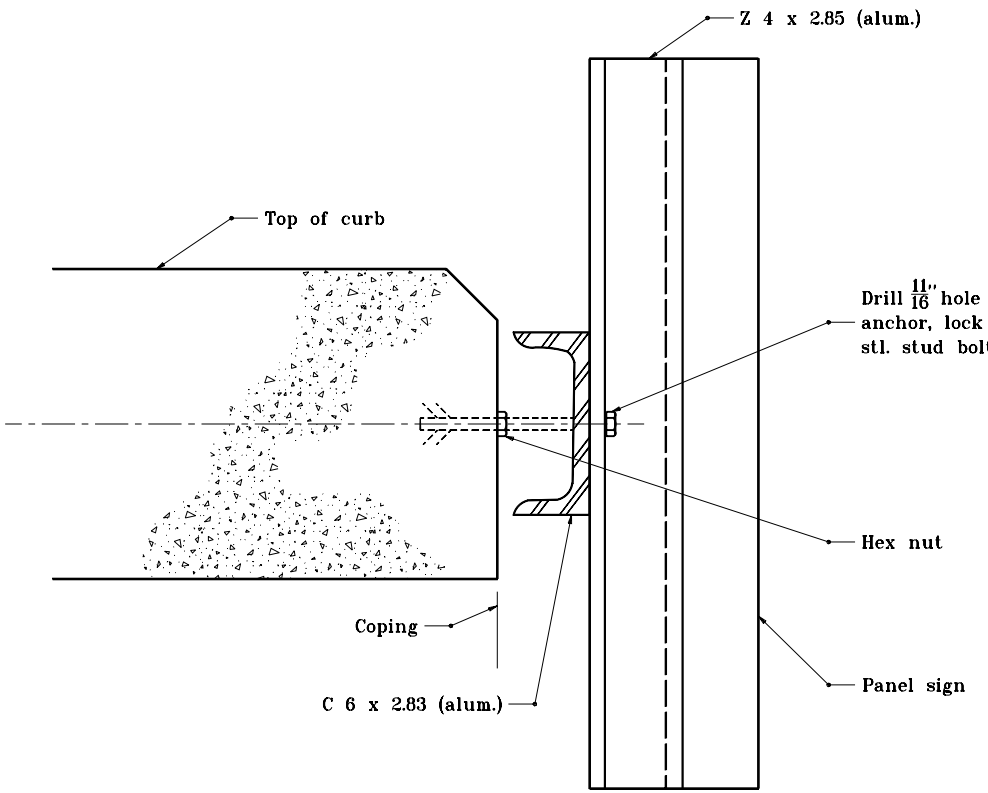

SECTION A–A

INDIANA DEPARTMENT OF TRANSPORTATION

BRIDGE BRACKET ASSY. FOR CROSSROAD SIGNING

SEPTEMBER 2001

STANDARD DRAWING NO. **E 802–SNBB–01**

ANTHONY L. UREMOVICH REGISTERED No. 18095 STATE OF INDIANA PROFESSIONAL ENGINEER

DESIGN STANDARDS ENGINEER

/s/ Anthony L. Uremovich 9-04-01
DESIGN STANDARDS ENGINEER — DATE

/s/ Firooz Zandi 9-04-01
CHIEF HIGHWAY ENGINEER — DATE

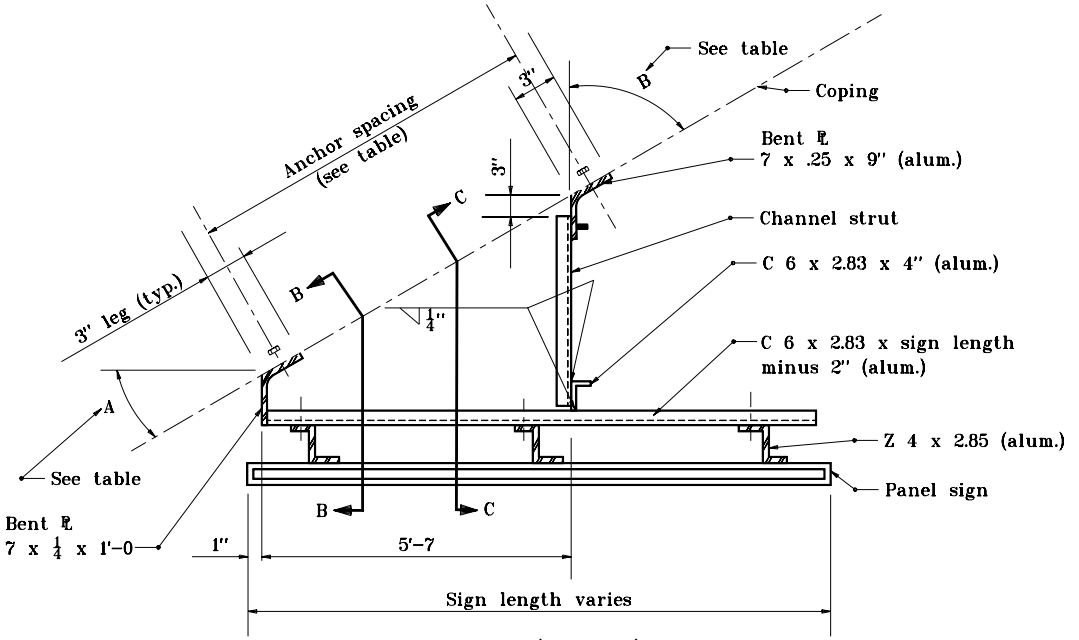

PLAN (TYPE A)

10°, 20°, 30°, & 40° CONNECTIONS

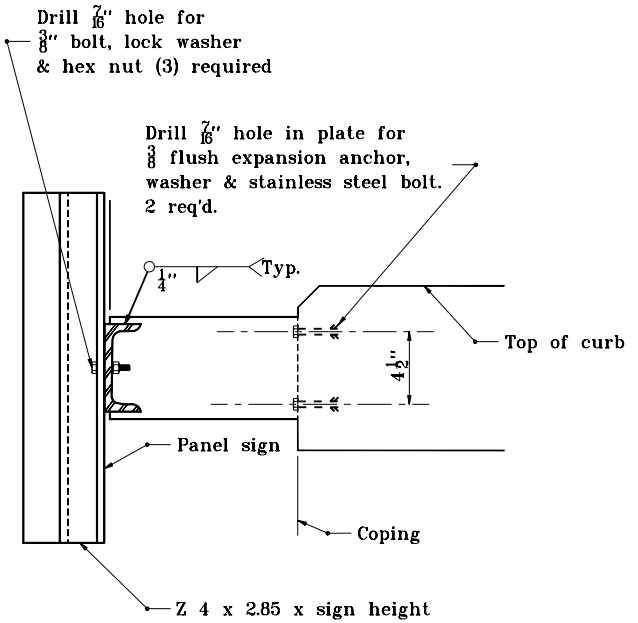

SECTION B–B

GENERAL NOTES

(1) See Standard Drawing E 802-SNBB-05 for table.

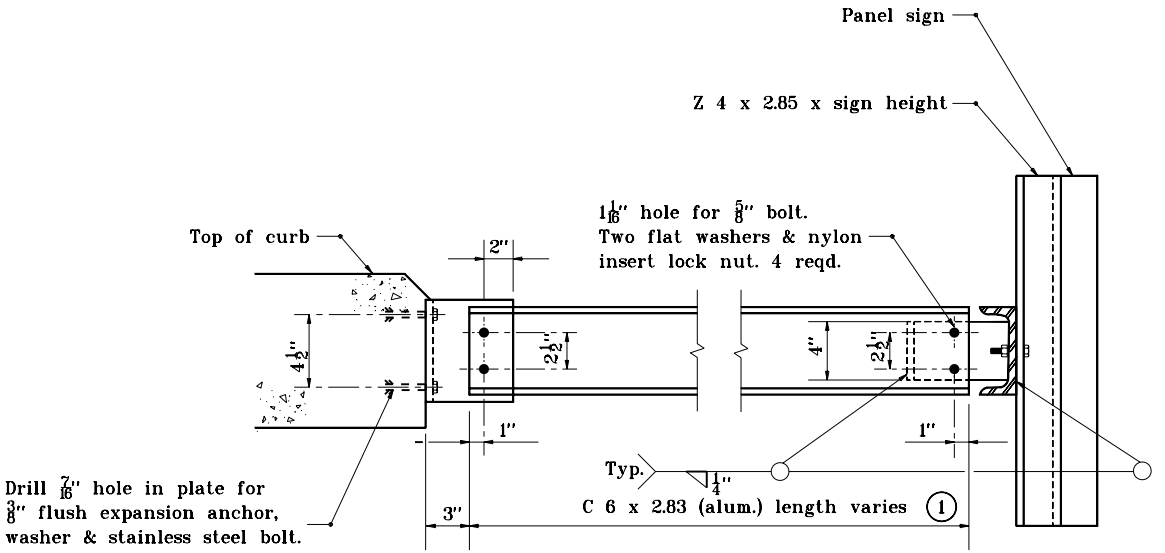

SECTION C–C

INDIANA DEPARTMENT OF TRANSPORTATION

BRIDGE BRACKET ASSY. FOR CROSSROAD SIGNING

SEPTEMBER 2001

STANDARD DRAWING NO. E 802-SNBB-02

ANTHONY L. UREMOVICH REGISTERED No. 18095 STATE OF INDIANA PROFESSIONAL ENGINEER

DESIGN STANDARDS ENGINEER

/s/ Anthony L. Uremovich 9-04-01
DESIGN STANDARDS ENGINEER — DATE

/s/ Firooz Zandi 9-04-01
CHIEF HIGHWAY ENGINEER — DATE

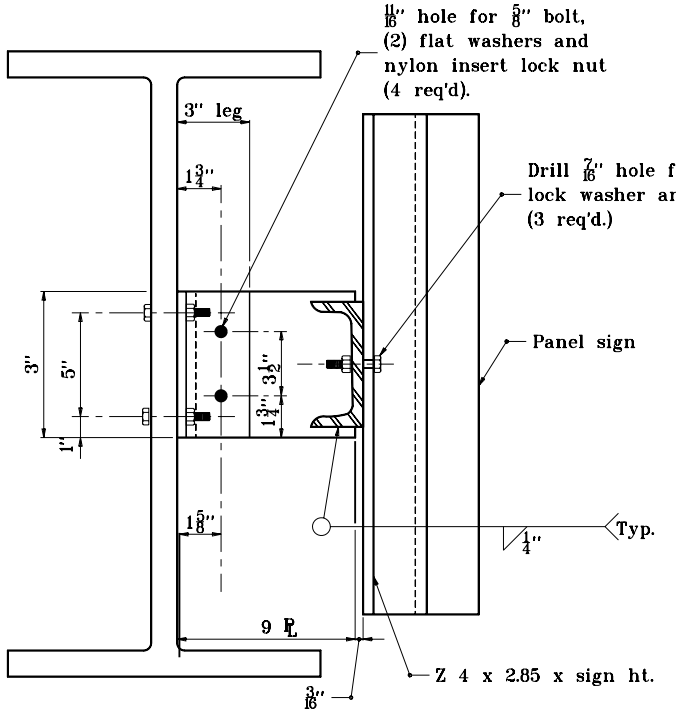

SECTION D–D

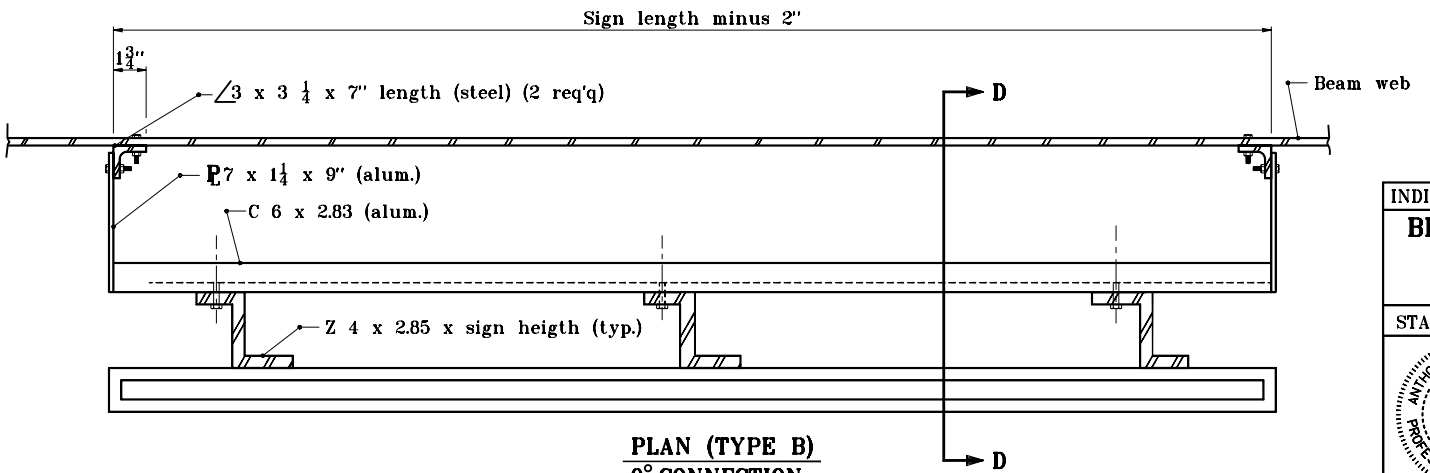

PLAN (TYPE B)
0° CONNECTION

INDIANA DEPARTMENT OF TRANSPORTATION

BRIDGE BRACKET ASSY. FOR CROSS–ROAD SIGNING

SEPTEMBER 2001

STANDARD DRAWING NO. E 802–SNBB–03

ANTHONY L. UREMOVICH REGISTERED No. 18095 STATE OF INDIANA PROFESSIONAL ENGINEER

DESIGN STANDARDS ENGINEER

/s/ Anthony L. Uremovich 9–04–01
DESIGN STANDARDS ENGINEER — DATE

/s/ Firooz Zandi 9–04–01
CHIEF HIGHWAY ENGINEER — DATE

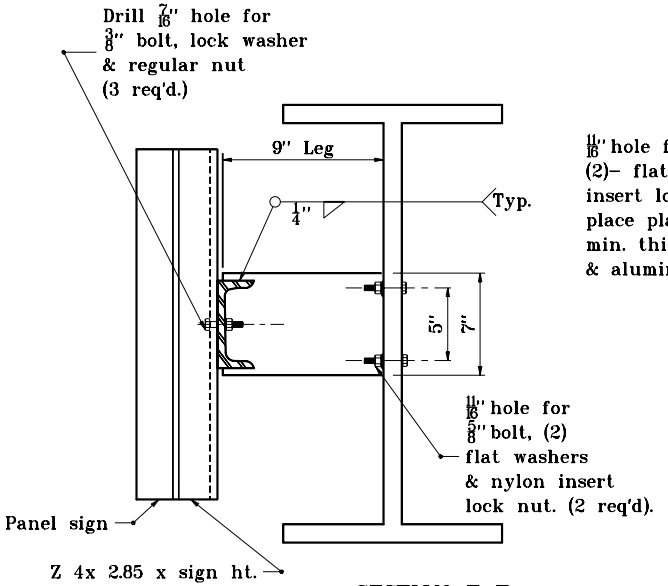

SECTION E–E

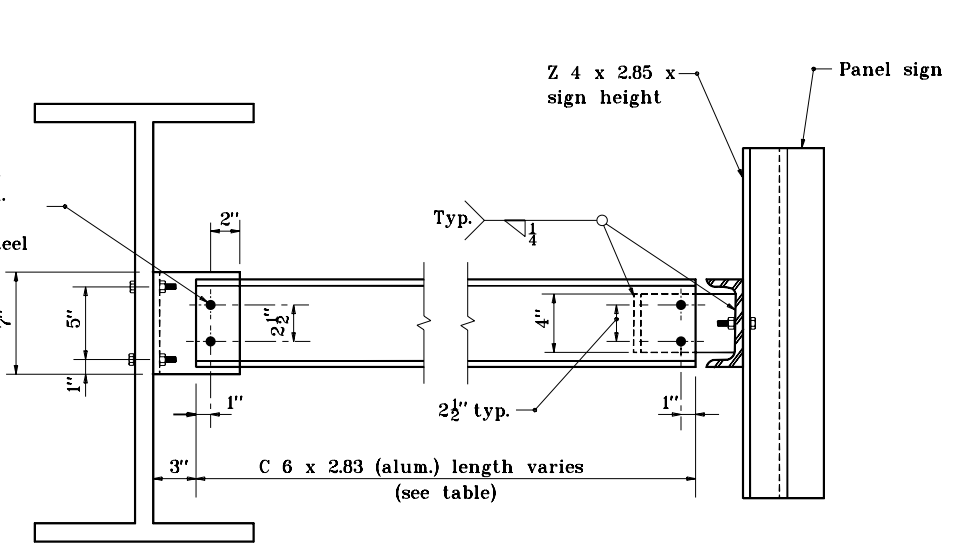

SECTION F–F

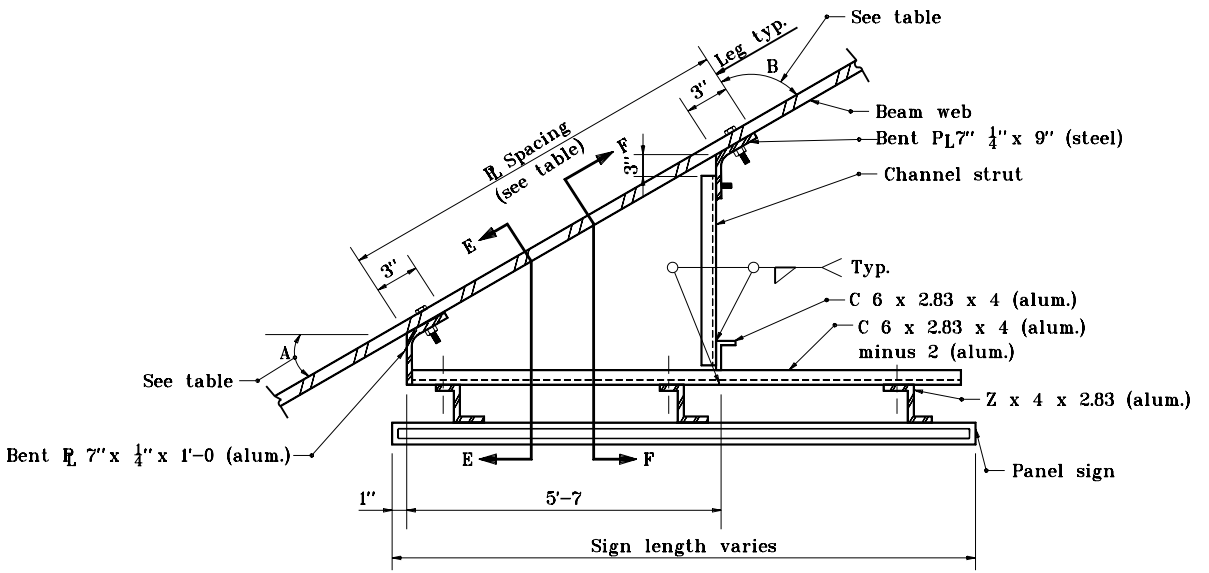

PLAN (TYPE B)

10°, 20°, 30°, & 40° Connections

INDIANA DEPARTMENT OF TRANSPORTATION

BRIDGE BRACKET ASSY. FOR CROSSROAD SIGNING

SEPTEMBER 2001

STANDARD DRAWING NO. E 802–SNBB–04

ANTHONY L. UREMOVICH REGISTERED No. 18095 STATE OF INDIANA PROFESSIONAL ENGINEER

DESIGN STANDARDS ENGINEER

/s/ Anthony L. Uremovich 9-04-01
DESIGN STANDARDS ENGINEER — DATE

/s/ Firooz Zandi 9-04-01
CHIEF HIGHWAY ENGINEER — DATE

TYPE A & B BRIDGE CONNECTION TABLE

SKEW	CONNECTION (ANGLE A)	ANGLE B	CHANNEL STRUT LENGTH	ANCHOR SPACING	PLATE SPACING
0°– 10°	0°	———	———	———	———
10°– 20°	10°	80°	C 6 x 2.83 x 1'–4 3/4"	5'–6	5'–11
20°– 30°	20°	70°	C 6 x 2.83 x 2'–5 1/4"	5'–11 1/2"	6'–2 1/2"
30°– 40°	30°	60°	C 6 x 2.83 x 3'–7 1/2"	6'–5 1/2"	6'–8 1/2"
40°– 50°	40°	50°	C 6 x 2.83 x 5'–1 1/4"	7'–3 3/4"	7'–6 1/2"

GENERAL NOTES

1. Bottom edge of sign shall be horizontal when erected and shall be a minimum of 1'–6 above the bridge beam flange at all points.

2. All 3/8" bolts used with 3/8" expansion anchors shall be 1 in. long (±0 ") and shall engage expansion anchors of 1 1/2 times the bolt dia. or 9 threads minimum except for Type A 0° connections to bridge fascia. The contractor may use either type A or B.

INDIANA DEPARTMENT OF TRANSPORTATION

BRIDGE BRACKET ASSY. FOR CROSSROAD SIGNING

SEPTEMBER 2001

STANDARD DRAWING NO. E 802–SNBB–05

ANTHONY L. UREMOVICH REGISTERED No. 18095 STATE OF INDIANA PROFESSIONAL ENGINEER

DESIGN STANDARDS ENGINEER

/s/ Anthony L. Uremovich 9–04–01
DESIGN STANDARDS ENGINEER — DATE

/s/ Firooz Zandi 9–04–01
CHIEF HIGHWAY ENGINEER — DATE

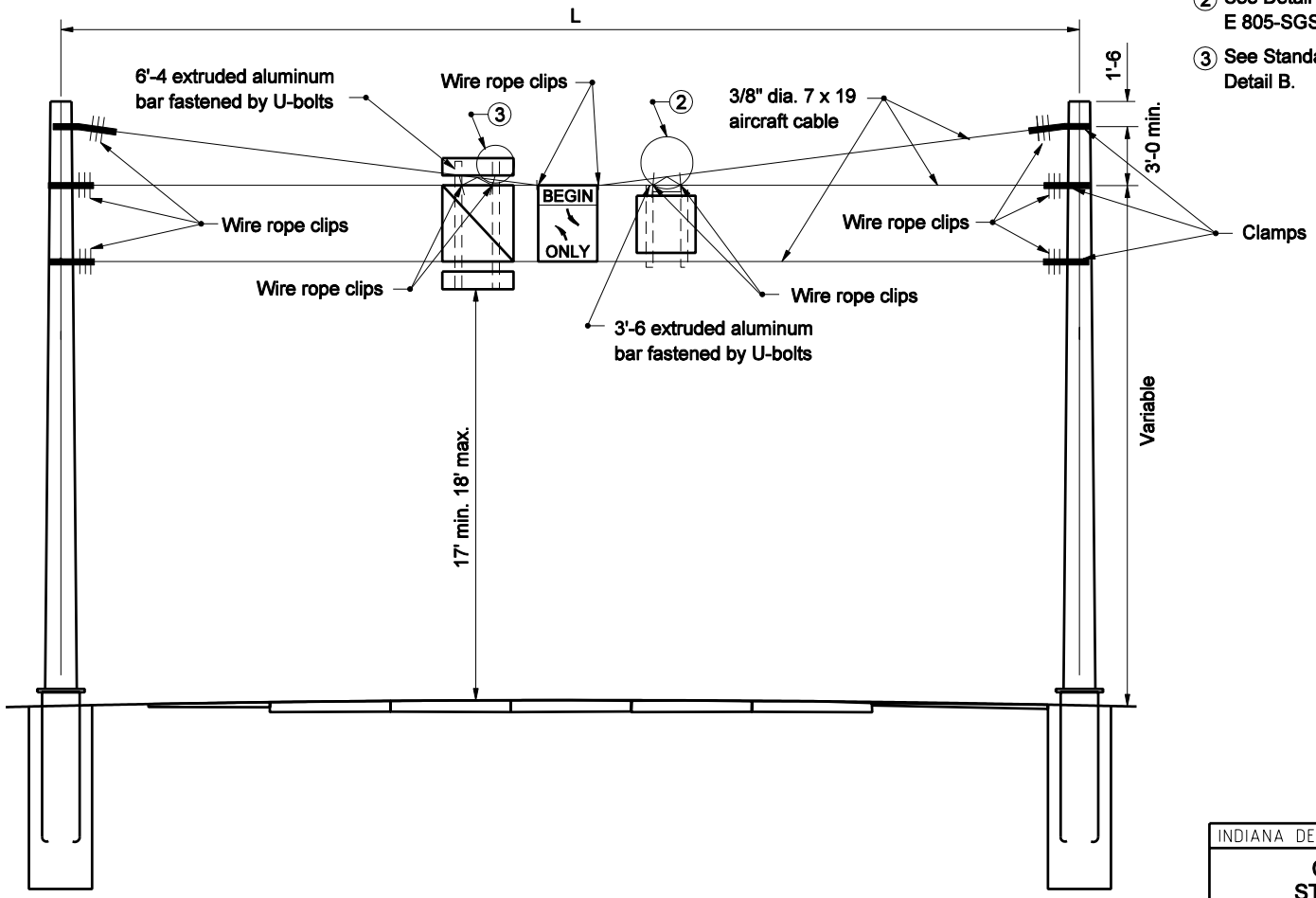

GENERAL NOTES

1. Sign centered over appropiate lane unless otherwise shown on cross section.

(2) See Detail A on Standard Drawing E 805-SGSC-04

(3) See Standard Drawing E 802-SNCS-03 Detail B.

INDIANA DEPARTMENT OF TRANSPORTATION

CABLE SPAN SIGN STRUCTURE DETAILS

SEPTEMBER 2005

STANDARD DRAWING NO. E 802-SNCS-01

ANTHONY L. UREMOVICH REGISTERED No. 18095 STATE OF INDIANA PROFESSIONAL ENGINEER

DESIGN STANDARDS ENGINEER

/s/ Anthony L.Uremovich 9-01-05
DESIGN STANDARDS ENGINEER DATE

/s/ Firooz Zandi 9-01-05
CHIEF HIGHWAY ENGINEER DATE

GENERAL NOTES

① Square nut under base plate for plumbing or raking pole.

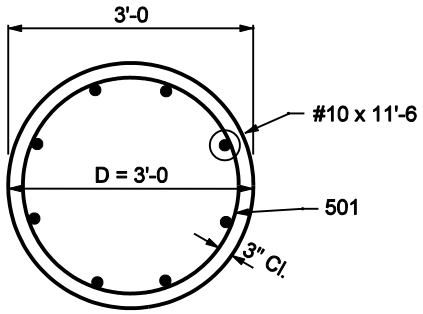

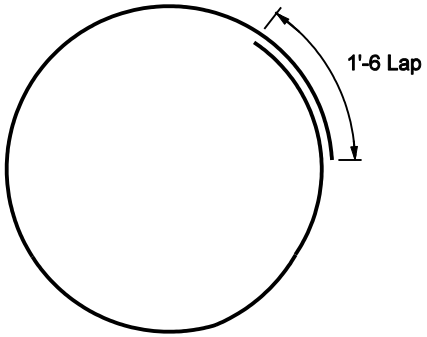

501 x 9'-3

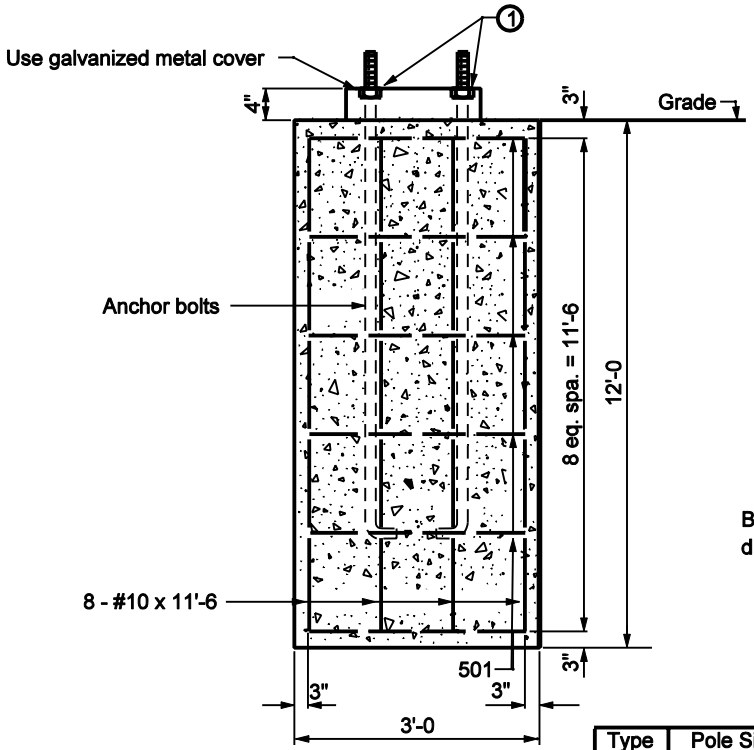

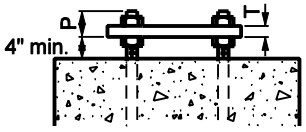

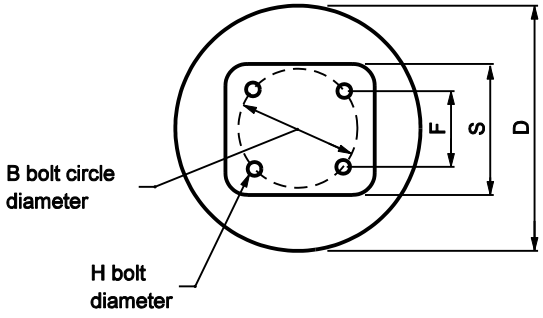

Type	Pole Size	Gauge	D	B	F	H	P	R	S	T	Anchor bolts
IV	12" x 24 ft	0	36"	16"	11"	2"	3"	3"	17"	2"	1" x 7'-6
	14" x 26 ft	0	36"	20"	14"	2"	4"	4"	20"	2"	2" x 8'-0
	15" x 30 ft	0	36"	22"	15"	2"	4"	4"	23"	2"	2" x 8'-0

INDIANA DEPARTMENT OF TRANSPORTATION

CABLE SPAN SIGN FOUNDATION DETAILS

MARCH 2003

STANDARD DRAWING NO. E 802-SNCS-02

RICHARD L. VanCLEAVE REGISTERED No. 9750 STATE OF INDIANA PROFESSIONAL ENGINEER

DESIGN STANDARDS ENGINEER

/s/ Richard L. VanCleave 3-03-03
DESIGN STANDARDS ENGINEER DATE

/s/ Richard K. Smutzer 3-03-03
CHIEF HIGHWAY ENGINEER DATE

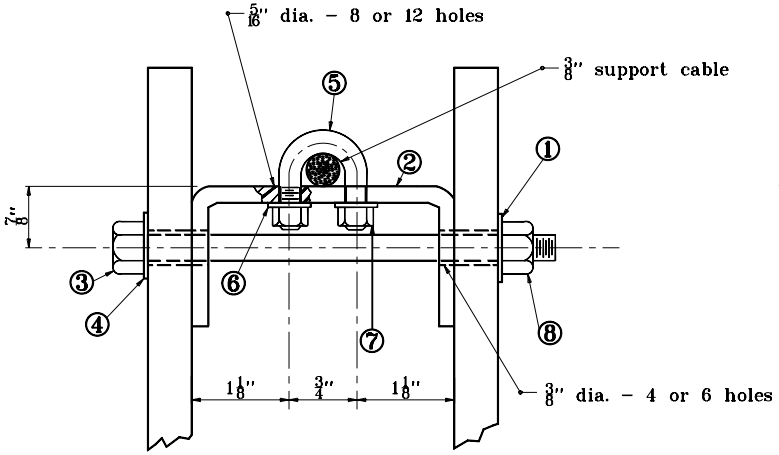

DETAIL A

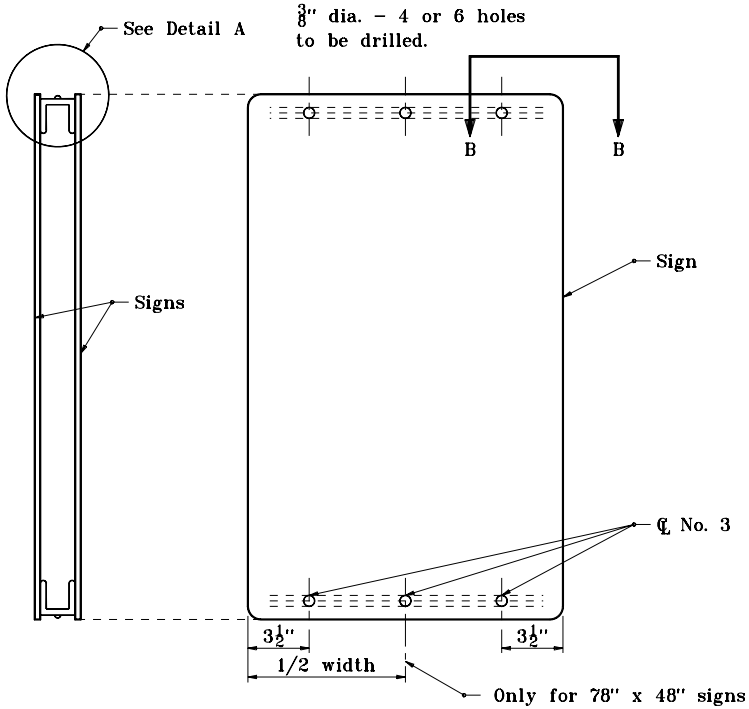

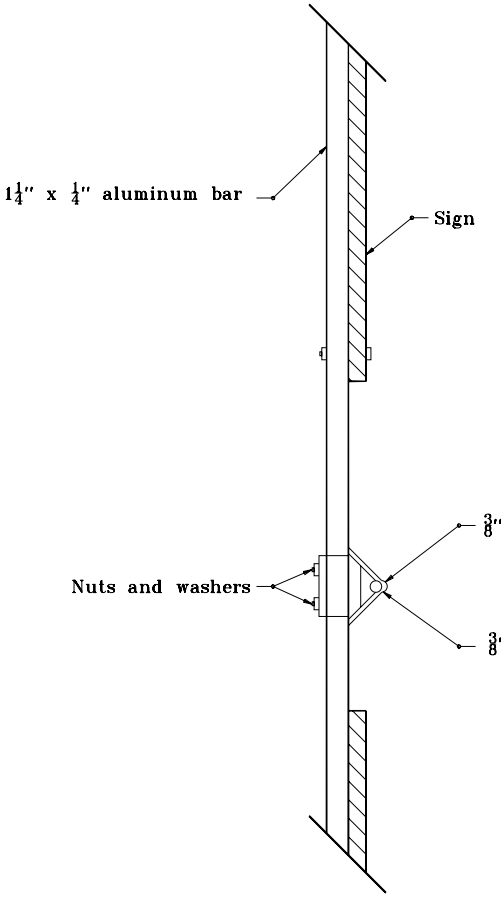

DETAIL B

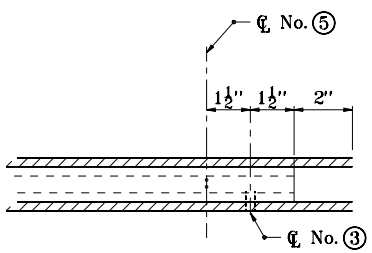

B–B TOP VIEW

PART No.	MATERIAL DESCRIPTION
①	5/16" nylon washer
②	3 x 4.1 steel channel
③	5/16 x 4" bolt
④	5/16" nylon washer
⑤	1/4" x 2 3/4" U bolt
⑥	1/4" lock washer
⑦	1/4" hex nut
⑧	5/16" lock nut

INDIANA DEPARTMENT OF TRANSPORTATION

CABLE SPAN SIGN STRUCTURE DETAILS

SEPTEMBER 2001

STANDARD DRAWING NO. **E 802–SNCS–03**

ANTHONY L. UREMOVICH REGISTERED No. 18095 STATE OF INDIANA PROFESSIONAL ENGINEER

DESIGN STANDARDS ENGINEER

/s/ Anthony L. Uremovich 9-04-01
DESIGN STANDARDS ENGINEER — DATE

/s/ Firooz Zandi 9-04-01
CHIEF HIGHWAY ENGINEER — DATE

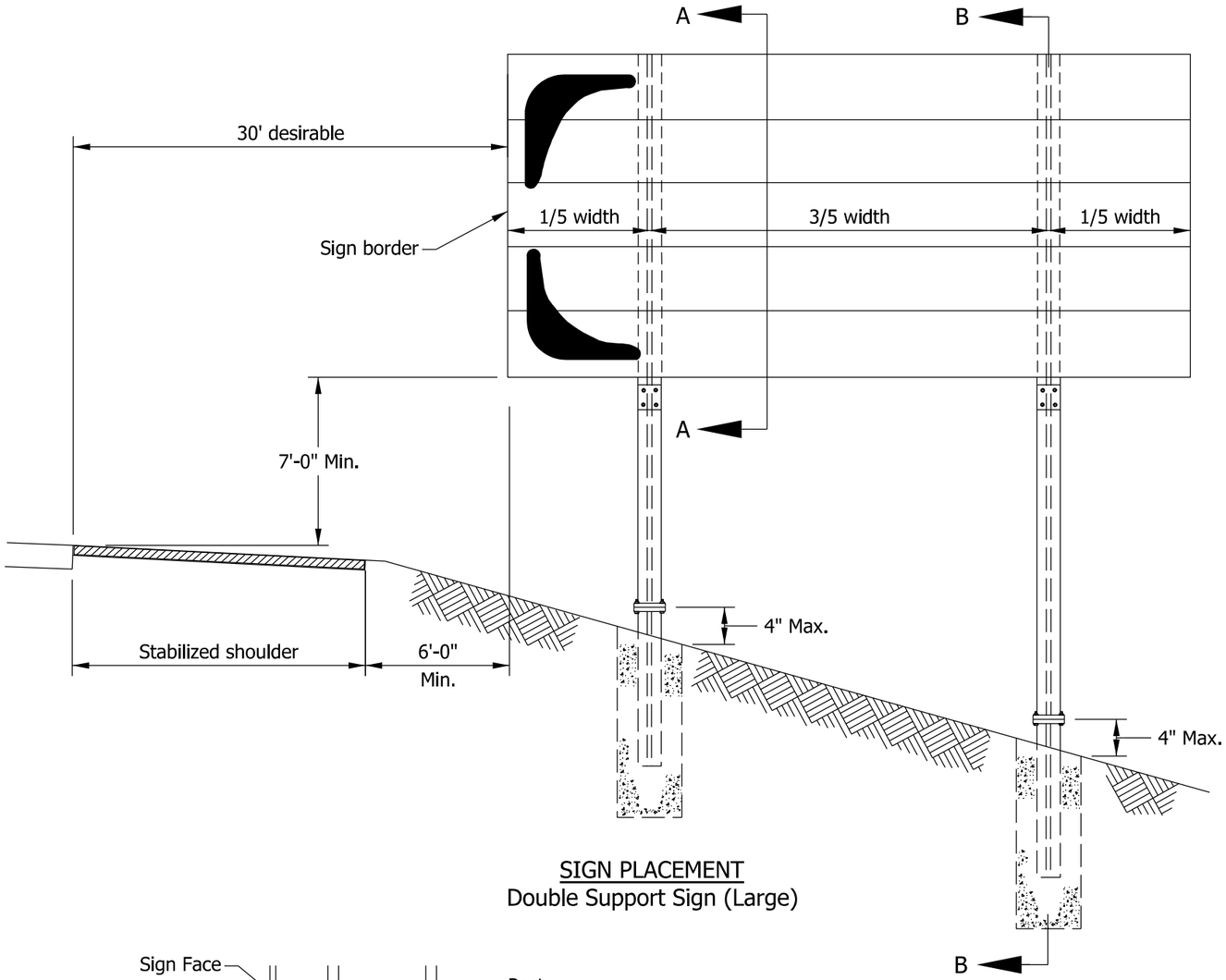

SIGN PLACEMENT
Double Support Sign (Large)

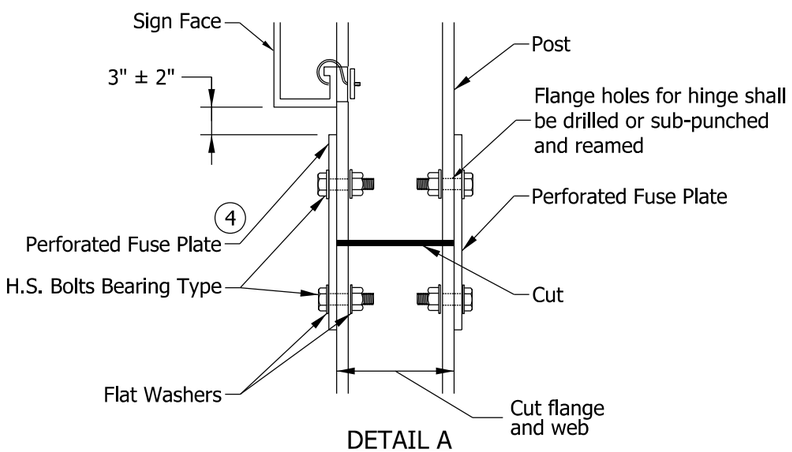

DETAIL A

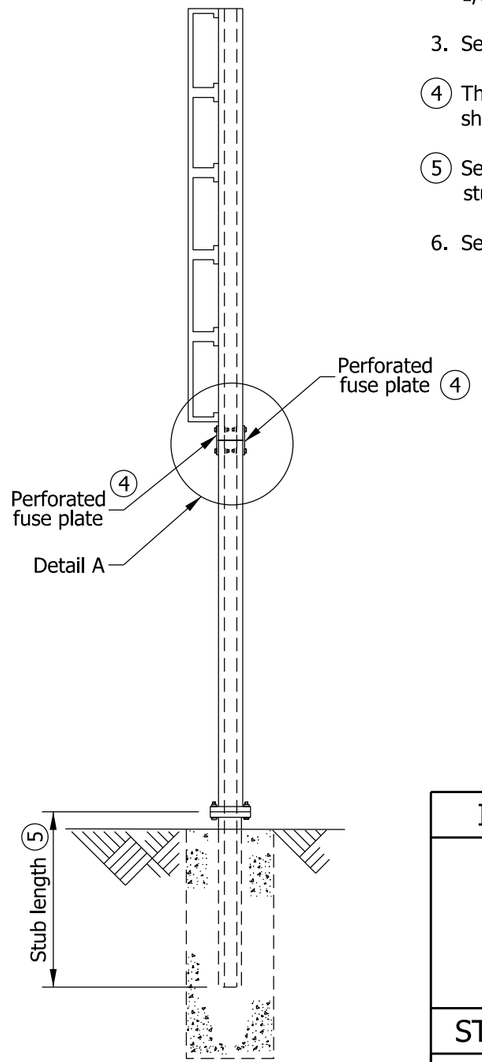

SECTION B-B

NOTES:

1. No more than one W10 x 19 or larger post can be used in a 7'-0" path. No more than two W8 x 18 or smaller posts can be used in a 7'-0" path.
2. For 3 post installation, the edge of sign to post is 1/6 width of sign and 1/3 width of sign between posts.
3. See Standard Drawing E 802-SNGP-04 for base plate details.

(4) The distance from the top of the fuse plate to the bottom of the sign shall be the same for all posts.

(5) See Standard Drawing E 802-SNGP-07 for required stub length.

6. See Standard Drawing E 802-SNGP-03 for Section A-A.

INDIANA DEPARTMENT OF TRANSPORTATION

SIGN PLACEMENT

SEPTEMBER 2013

STANDARD DRAWING NO. E 802-SNGP-01

ALFREDO B. HANZA
REGISTERED
No. 60020657
STATE OF INDIANA
PROFESSIONAL ENGINEER

/s/ Alfredo B. Hanza 02/05/13
DESIGN STANDARDS ENGINEER DATE

/s/ Mark A. Miller 03/27/13
CHIEF ENGINEER DATE

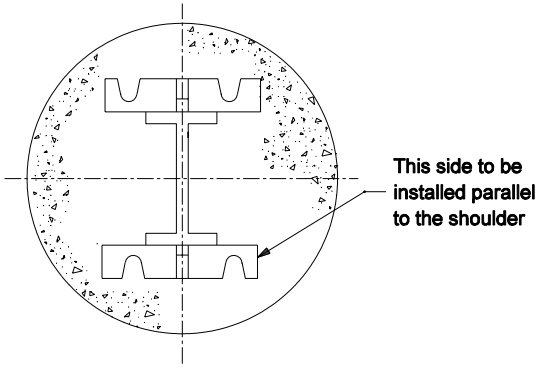

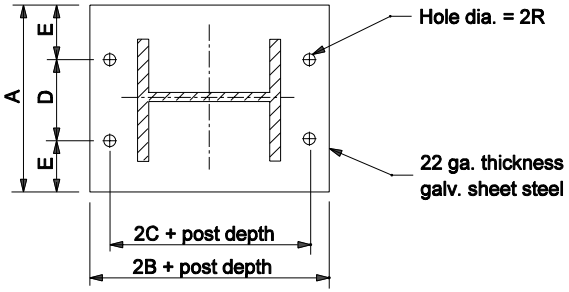

KEEPER PLATE

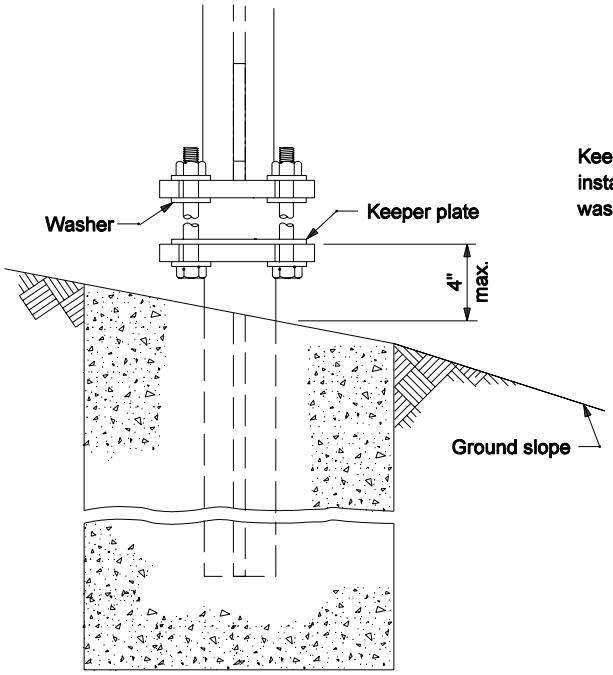

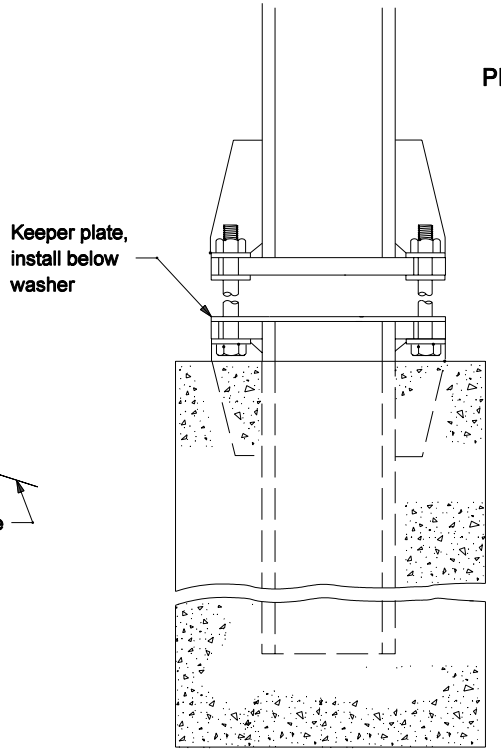

PROCEDURE FOR ASSEMBLY OF BASE CONNECTION:

Assemble post to stub with bolts. One flat washer on each bolt shall be placed between the top of the keeper plate and bottom of the top base plate. Shim as required to plumb post.

Tighten all bolts the maximum possible with 12" to 25" wrench to bed washers and shims and to clean bolt threads, then loosen each bolt in turn and retighten bolts in a systematic order to the prescribed torque. See table on Standard Drawing E 802-SNGP-05 for dimensions.

Burr threads at junction with nuts using a center punch to prevent nut loosening.

Stubs shall be plumb and base plate shall be leveled and physically held level until the concrete sets.

INDIANA DEPARTMENT OF TRANSPORTATION

WIDE FLANGE SIGN SUPPORT BASE

March 2004

STANDARD DRAWING NO. E 802-SNGP-02

RICHARD L. VanCLEAVE REGISTERED No. 9750 STATE OF INDIANA PROFESSIONAL ENGINEER

DESIGN STANDARDS ENGINEER

/s/ Richard L. VanCleave 3-01-04
DESIGN STANDARDS ENGINEER DATE

/s/ Richard K. Smutzer 3-01-04
CHIEF HIGHWAY ENGINEER DATE

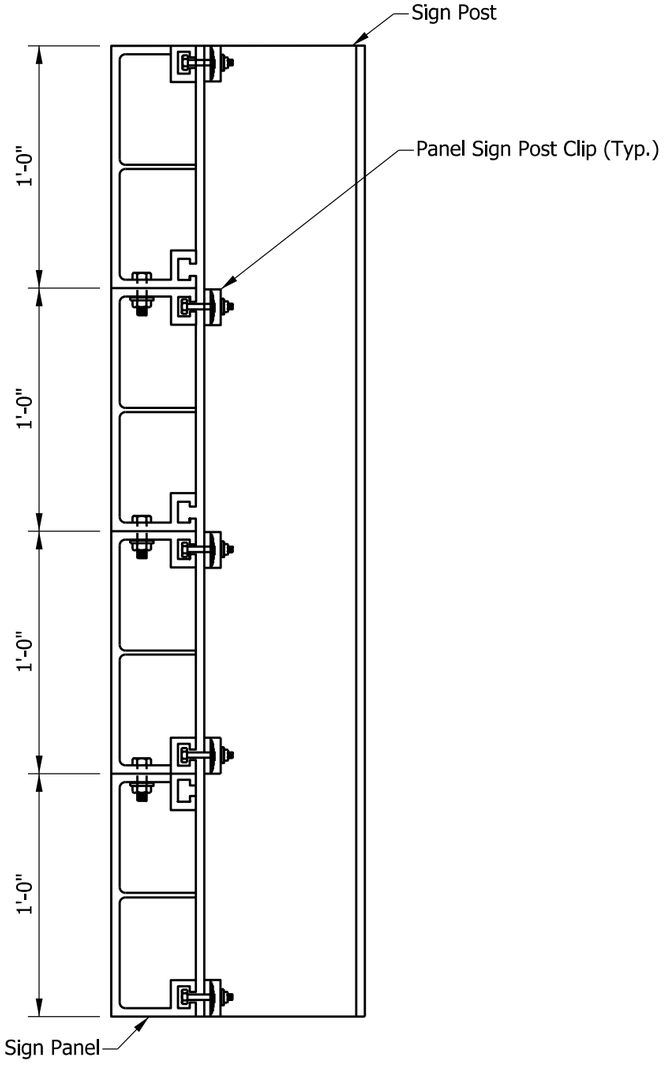

SECTION A-A

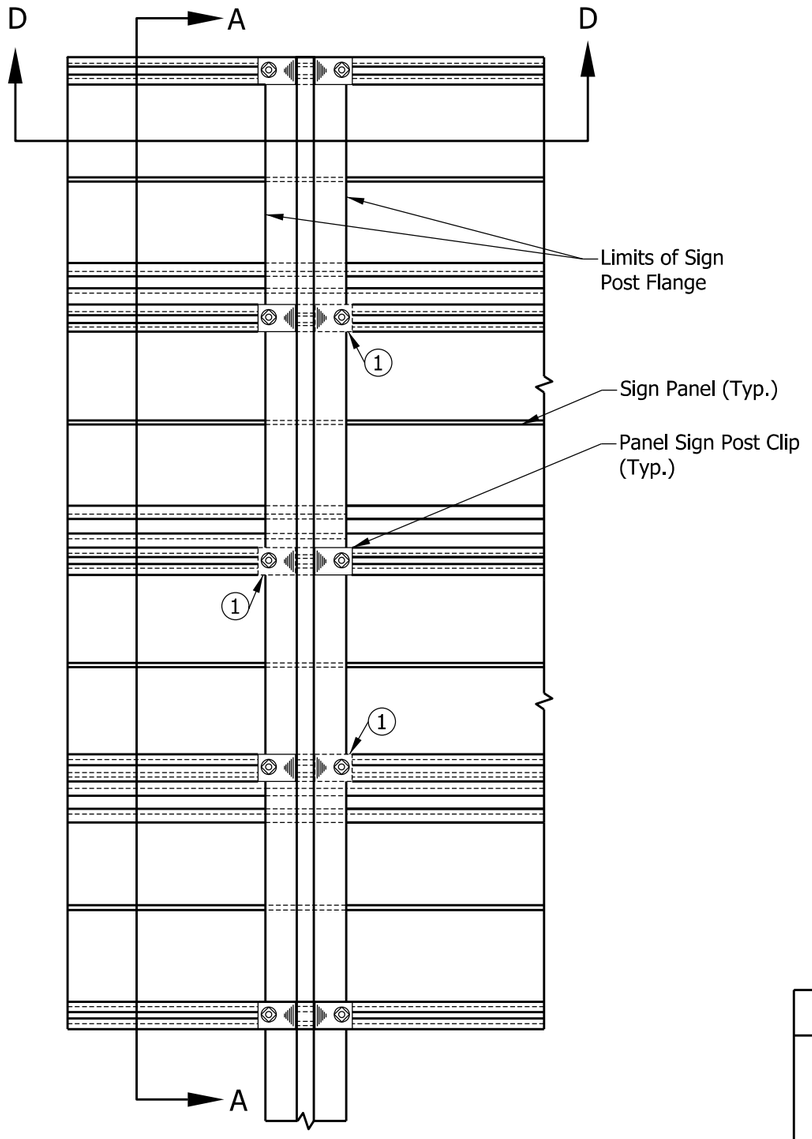

ELEVATION
(View from Back of Sign)

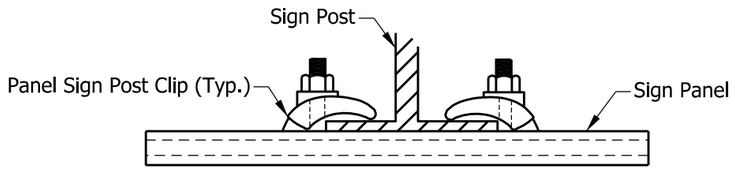

DETAIL A

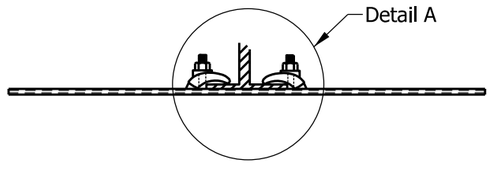

SECTION D-D

NOTES:

(1) Required for sign width greater than 24'.

INDIANA DEPARTMENT OF TRANSPORTATION

SIGN PLAN DETAILS

SEPTEMBER 2013

STANDARD DRAWING NO. E 802-SNGP-03

ALFREDO B. HANZA REGISTERED No. 60020657 STATE OF INDIANA PROFESSIONAL ENGINEER

/s/ Alfredo B. Hanza 02/05/13
DESIGN STANDARDS ENGINEER DATE

/s/ Mark A. Miller 03/27/13
CHIEF ENGINEER DATE

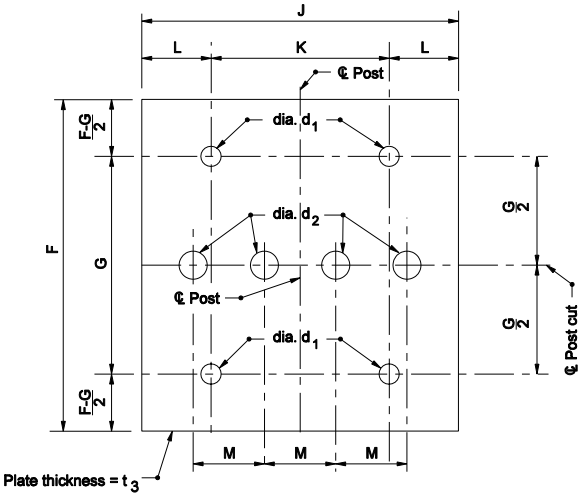

PERFORATED FUSE PLATE DETAIL ③.

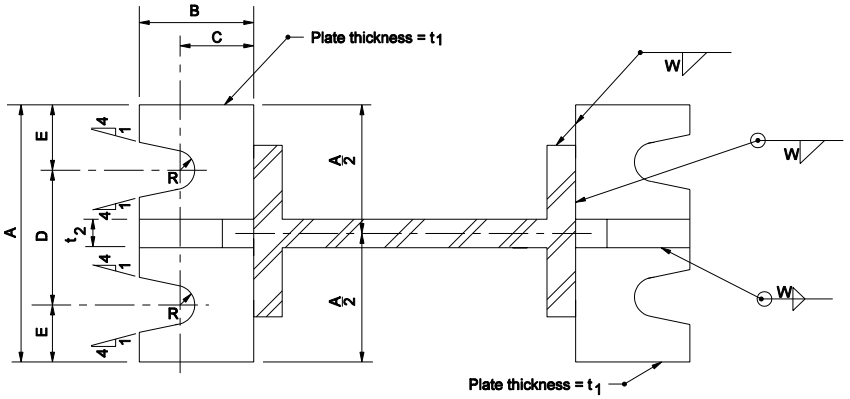

BASE PLATE DETAIL

SHIM DETAIL						
BOLT DIAMETER	L	W	N	R	S	X
½" to ¾"	1¾"	1¾"	15/32"	13/32"	13/16"	15/32"
1"	2"	2"	⅜"	⅝"	1¼"	15/32"

Notes:

1. See table on Standard Drawing E 802-SNGP-05 for diminsions and weight of stiffener plate and base plate.
2. See table on Standard Drawing E 802-SNGP-06 for dimensions and weight of preforated fuse plate.
3. Use H.S. bolts with hex head, & hex nut, one flat washer under each bolt head and beveled or flat washer (where required) under nut.
4. Dimensional tolerances excluding the thickness for shims is ± 1/32".

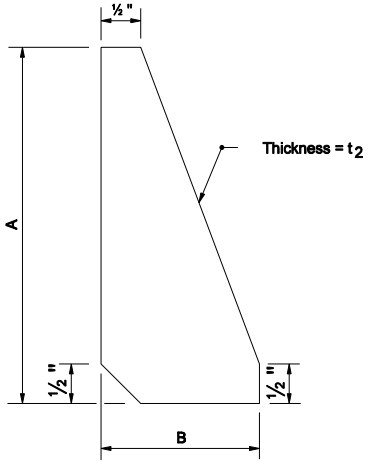

STIFFENER PLATE DETAIL

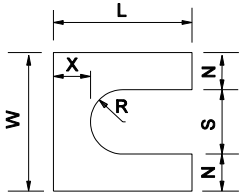

Furnish 2-0.012 ± thick and 2-0.03 ± thick shims per post.

SHIM DETAIL

INDIANA DEPARTMENT OF TRANSPORTATION

SIGN DETAILS

SEPTEMBER 2004

STANDARD DRAWING NO. E 802-SNGP-04

RICHARD L. VANCLEAVE REGISTERED No. 9750 STATE OF INDIANA PROFESSIONAL ENGINEER

DESIGN STANDARDS ENGINEER

/s/ Richard L. VanCleave 9-01-04
DESIGN STANDARDS ENGINEER DATE

/s/ Richard K. Smutzer 9-01-04
CHIEF HIGHWAY ENGINEER DATE

BASE PLATE & STIFFENER PLATE DATA TABLE

Post Size	Bolt Size	Torque in. - lb	Wt. of 4 Plates (One Post) ,lb	Wt. of 4 Stiffeners (One Post) ,lb	A	B	C	D	E	R	d4	t_1	t_2	W
W6 x 9	½" ø x 2¼ "	140	5.10	3.33	4½"	2"	1⅜"	2½"	1"	9/23"	1⅜"	½"	½"	3/16"
W8 x 10	⅝" ø x 2½ "	300	6.38	4.07	5"	2¼"	1½"	2⅞"	1 1/16"	11/32"	1½"	"	"	"
W8 x 13	¾" ø x 3"	500	12.6	7.97	6"	2½"	"	3⅛"	1 7/16"	13/32"	1¾"	¾"	¾"	¼"
W8 x 15	"	"	"	"	"	"	"	"	"	"	"	"	"	"
W8 x 18	"	"	"	"	"	"	"	"	"	"	"	"	"	5/16"
W10 x 19	1" ø x 3.¼"	700	14.04	8.66	"	2¾"	1½"	3⅝"	1 3/16"	17/32"	2¼"	¾"	¾"	5/16"

INDIANA DEPARTMENT OF TRANSPORTATION

SIGN DATA TABLES

SEPTEMBER 2002

STANDARD DRAWING NO. E 802-SNGP-05

RICHARD L. VANCLEAVE REGISTERED No. 9750 STATE OF INDIANA PROFESSIONAL ENGINEER

DESIGN STANDARDS ENGINEER

/s/ Richard L. VanCleave 9-03-02
DESIGN STANDARDS ENGINEER DATE

/s/ Richard K. Smutzer 9-03-02
CHIEF HIGHWAY ENGINEER DATE

PERFORATED FUSE PLATE DATA TABLE												
Post Size	BOLT SIZE	Wt. of Plate* (One Post), lb	F	G	J	K	L	M	d_1	d_2	t_3	Bolt Tension, lbs
W6 x 9	½ " x 1½ "	1.01	4¼ "	2"	4"	2¼ "	⅞ "	1"	9⁄16"	¾ "	¼ "	12000
W8 x 10	½ " x 1½ "	1.01	4¼ "	2"	4"	2¼ "	⅞ "	1"	9⁄16"	¾ "	¼ "	12000
W8 x 13	½ " x 1½ "	1.01	4¼ "	2"	4"	2¼ "	⅞ "	1"	9⁄16"	¾ "	¼ "	12000
W8 x 15	⅝ " x 2¼ "	1.72	5"	2½ "	4"	2¼ "	⅞ "	1"	11⁄16 "	¾ "	⅜ "	19000
W8 x 18	⅝ " x 2¼ "	2.27	5"	2½ "	5¼ "	2¾ "	1¼ "	1¼ "	11⁄16 "	1 1⁄16 "	⅜ "	19000
W10 x 19	⅝ " x 2¼ "	1.72	5"	2½ "	4"	2¼ "	⅞ "	1"	11⁄16 "	¾ "	⅜ "	19000

* Gross weight with holes deducted from weight. Incidental weights of bolts and washers are not included in plan quantities.

NOTES:

1. See Standard Drawing E 802-SNGP-01 through 07 for details and notes for posts, bolts, washers, etc.

INDIANA DEPARTMENT OF TRANSPORTATION

SIGN DATA TABLES

SEPTEMBER 2008

STANDARD DRAWING NO. E 802- SNGP-06

RICHARD L. VanCLEAVE REGISTERED No. 9750 STATE OF INDIANA PROFESSIONAL ENGINEER

DESIGN STANDARDS ENGINEER

/s/ Richard L. VanCleave 09/02/08

DESIGN STANDARDS ENGINEER — DATE

/s/ Mark A. Miller 09/02/08

CHIEF HIGHWAY ENGINEER — DATE

FOUNDATION DATA				
Type	Post Size	Stub Length	Dia.	Depth
VII	W6 x 9	2'-0	20"	5'
VIII	W8 x 10	2'-0	20"	5'
IX	W8 x 13	2'-0	20"	5'
X	W8 x 15	2'-6	24"	6'
XI	W8 x 18	2'-6	24"	6'
XII	W10 x 19	2'-6	24"	7'

INDIANA DEPARTMENT OF TRANSPORTATION

WIDE FLANGE SIGN POST SUPPORT FOUNDATION DATA

MARCH 2004

STANDARD DRAWING NO. E 802-SNGP-07

RICHARD L. VanCLEAVE REGISTERED No. 9750 STATE OF INDIANA PROFESSIONAL ENGINEER

DESIGN STANDARDS ENGINEER

/s/ Richard L. VanCleave 3-01-04
DESIGN STANDARDS ENGINEER DATE

/s/ Richard K. Smutzer 3-01-04
CHIEF HIGHWAY ENGINEER DATE

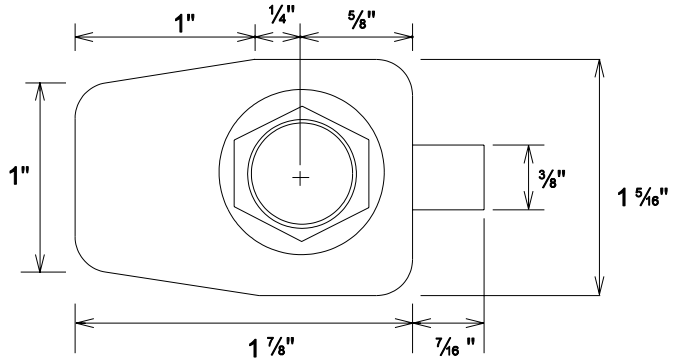

PLAN VIEW

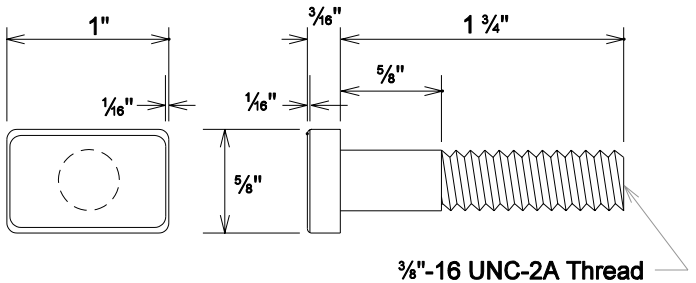

SIDE VIEW

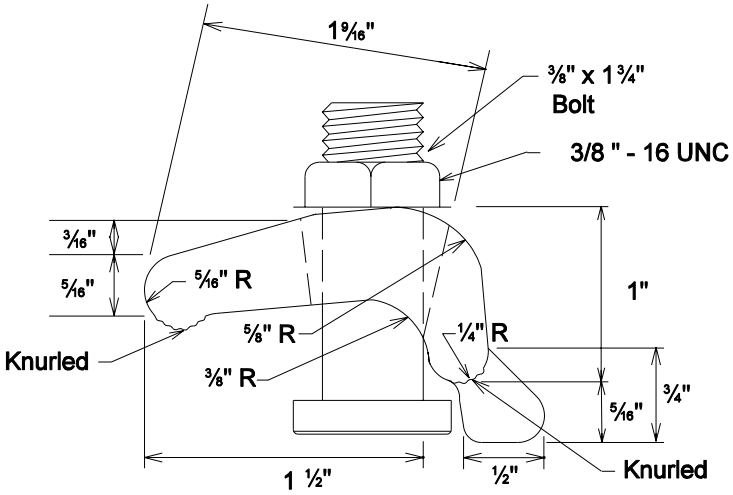

TOP VIEW

ELEVATION VIEW

POST CLIP BOLT

INDIANA DEPARTMENT OF TRANSPORTATION

Panel Sign Post Clip

SEPTEMBER 2004

STANDARD DRAWING NO. E 802-SNGP-10A

RICHARD L. VanCLEAVE REGISTERED No. 9750 STATE OF INDIANA PROFESSIONAL ENGINEER

DESIGN STANDARDS ENGINEER

/s/ Richard L. VanCleave 9-01-04
DESIGN STANDARDS ENGINEER DATE

/s/ Richard K. Smutzer 9-01-04
CHIEF HIGHWAY ENGINEER DATE

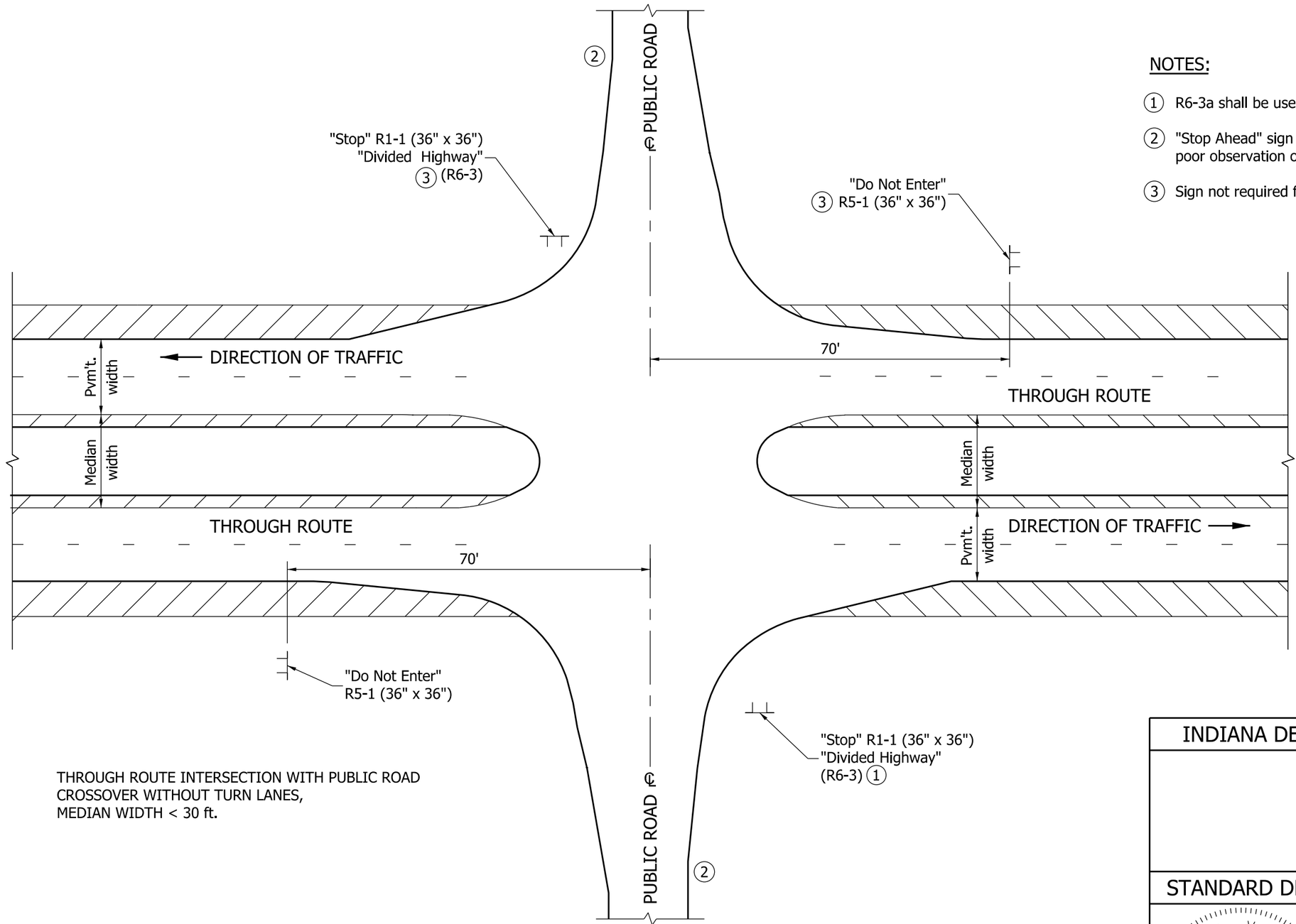

THROUGH ROUTE INTERSECTION WITH PUBLIC ROAD
CROSSOVER WITHOUT TURN LANES,
MEDIAN WIDTH < 30 ft.

NOTES:

① R6-3a shall be used in place of R6-3 at tee intersection.

② "Stop Ahead" sign may be required if there is determined to be poor observation of the "Stop" sign. See plans for locations.

③ Sign not required for tee intersection.

INDIANA DEPARTMENT OF TRANSPORTATION

SIGN PLACEMENT

SEPTEMBER 2010

STANDARD DRAWING NO. E 802-SNGP-11

RICHARD L. VanCLEAVE REGISTERED No. 9750 STATE OF INDIANA PROFESSIONAL ENGINEER

DESIGN STANDARDS ENGINEER

/s/ Richard L. VanCleave 09/01/10
DESIGN STANDARDS ENGINEER DATE

/s/ Mark A. Miller 09/01/10
CHIEF HIGHWAY ENGINEER DATE

NOTES:

1. R6-3a shall be used in place of R6-3 at tee intersection.
2. "Stop Ahead" sign may be required if there is determined to be poor observation of the "Stop" sign. See plans for locations.
3. Sign not required for tee intersection.

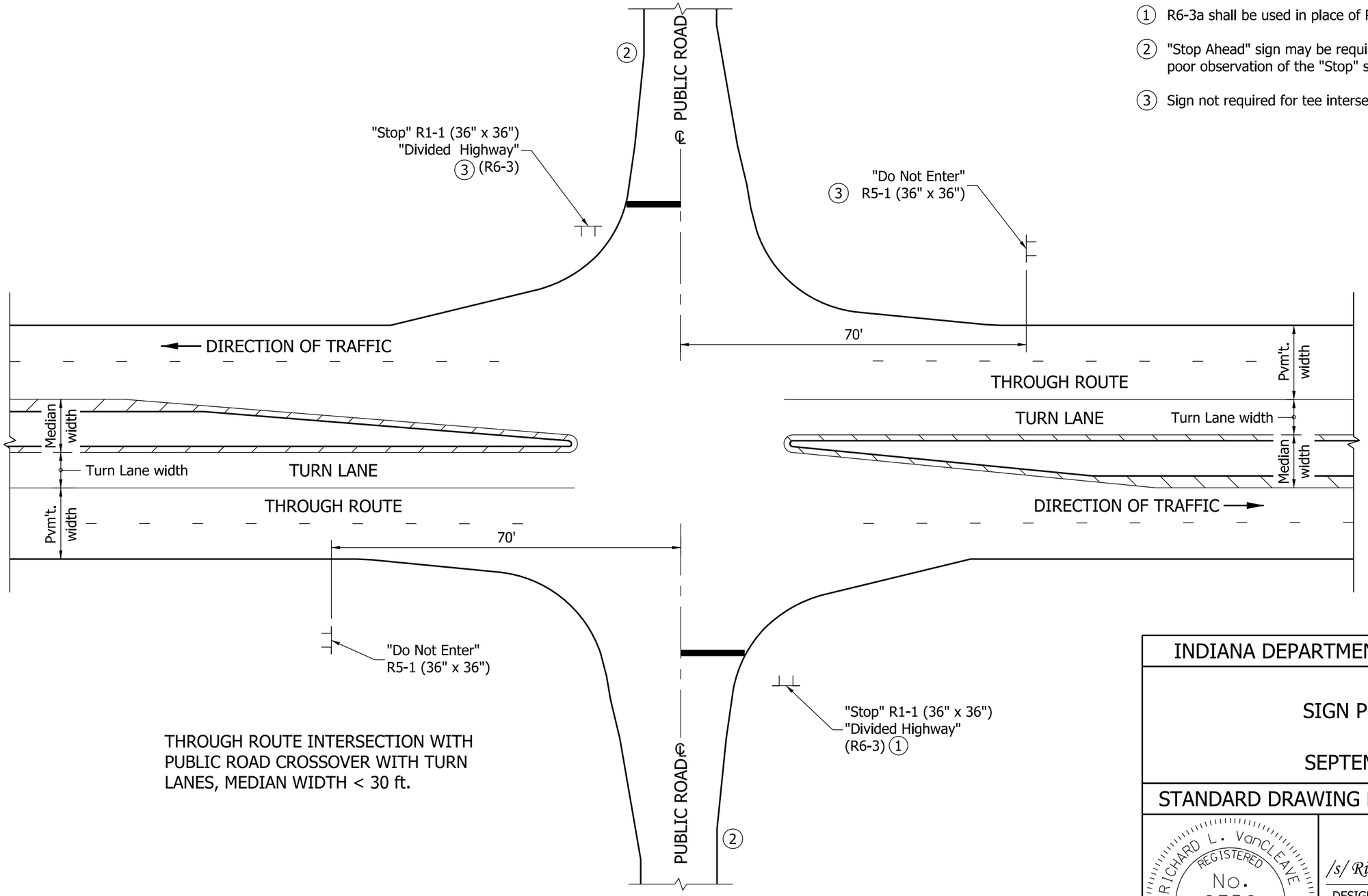

THROUGH ROUTE INTERSECTION WITH PUBLIC ROAD CROSSOVER WITH TURN LANES, MEDIAN WIDTH < 30 ft.

INDIANA DEPARTMENT OF TRANSPORTATION

SIGN PLACEMENT

SEPTEMBER 2010

STANDARD DRAWING NO. E 802-SNGP-12

RICHARD L. VanCLEAVE REGISTERED No. 9750 STATE OF INDIANA PROFESSIONAL ENGINEER

DESIGN STANDARDS ENGINEER

/s/ Richard L. VanCleave 09/01/10

DESIGN STANDARDS ENGINEER DATE

/s/ Mark A. Miller 09/01/10

CHIEF HIGHWAY ENGINEER DATE

NOTES:

1. R6-3a shall be used in place of R6-3 at tee intersection.
2. "Stop Ahead" sign may be required if there is determined to be poor observation of the "Stop" sign. See plans for locations.
3. Sign not required for tee intersection.
4. Sign shall be placed on centerline of public road approach for tee intersection.

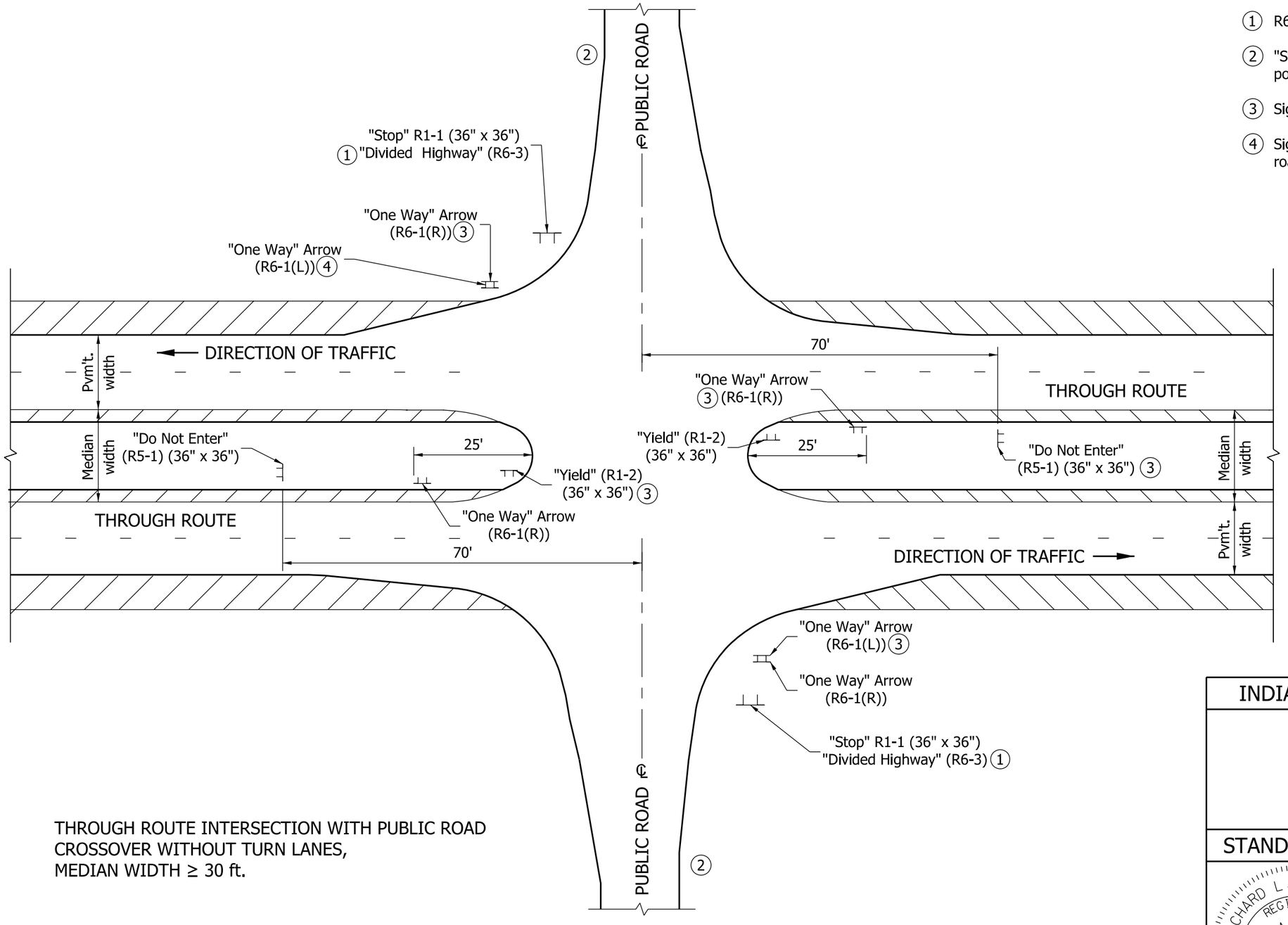

THROUGH ROUTE INTERSECTION WITH PUBLIC ROAD
CROSSOVER WITHOUT TURN LANES,
MEDIAN WIDTH ≥ 30 ft.

INDIANA DEPARTMENT OF TRANSPORTATION

SIGN PLACEMENT

SEPTEMBER 2010

STANDARD DRAWING NO. E 802-SNGP-13

RICHARD L. VanCLEAVE
REGISTERED
No. 9750
STATE OF INDIANA
PROFESSIONAL ENGINEER

DESIGN STANDARDS ENGINEER

/s/ Richard L. VanCleave 09/01/10
DESIGN STANDARDS ENGINEER DATE

/s/ Mark A. Miller 09/01/10
CHIEF HIGHWAY ENGINEER DATE

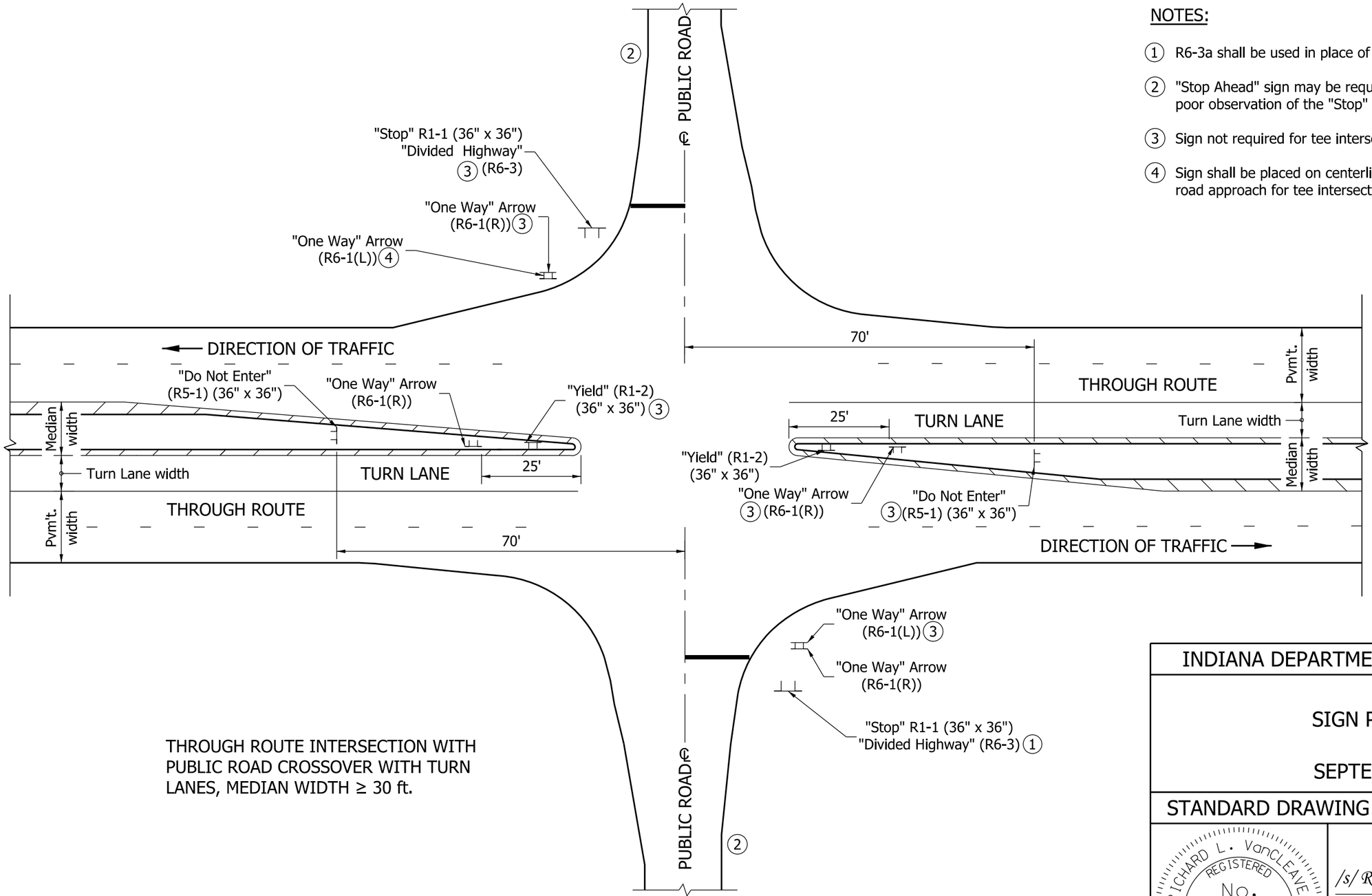

THROUGH ROUTE INTERSECTION WITH PUBLIC ROAD CROSSOVER WITH TURN LANES, MEDIAN WIDTH ≥ 30 ft.

NOTES:

1. R6-3a shall be used in place of R6-3 at tee intersection.
2. "Stop Ahead" sign may be required if there is determined to be poor observation of the "Stop" sign. See plans for locations.
3. Sign not required for tee intersection.
4. Sign shall be placed on centerline of public road approach for tee intersection.

INDIANA DEPARTMENT OF TRANSPORTATION

SIGN PLACEMENT

SEPTEMBER 2010

STANDARD DRAWING NO. E 802-SNGP-14

RICHARD L. VanCLEAVE REGISTERED No. 9750 STATE OF INDIANA PROFESSIONAL ENGINEER

DESIGN STANDARDS ENGINEER

/s/ Richard L. VanCleave 09/01/10
DESIGN STANDARDS ENGINEER DATE

/s/ Mark A. Miller 09/01/10
CHIEF HIGHWAY ENGINEER DATE



WHITE BACKGROUND WITH BLACK BORDER AND NUMERALS

M1-4(I)

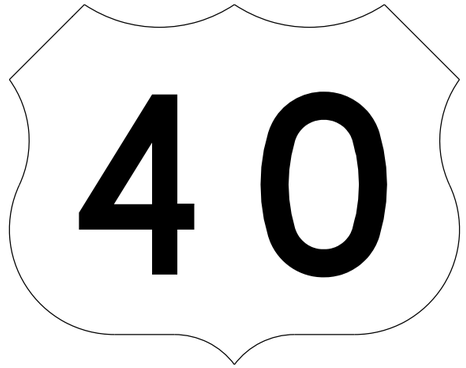

WHITE BACKGROUND WITH BLACK NUMERALS

M1-4(G)

(G) INDICATES SHIELD TO BE USED ON ALL GUIDE SIGNS AND DOES NOT REQUIRE BLACK BORDER

FOR INDEPENDENT USE ONLY

M1-4(I)					
12" NUMERALS		18" NUMERALS		24" NUMERALS	
2 DIGITS	3 DIGITS	2 DIGITS	3 DIGITS	2 DIGITS	3 DIGITS
24" x 24"	30" x 24"	36" x 36"	45" x 36"	48" x 48"	60" x 48"

FOR GUIDE SIGN USE

M1-4(G)					
12" NUMERALS		18" NUMERALS		24" NUMERALS	
2 DIGITS	3 DIGITS	2 DIGITS	3 DIGITS	2 DIGITS	3 DIGITS
24" x 24"	30" x 24"	36" x 36"	45" x 36"	48" x 48"	60" x 48"



M2-1(S)
M2-1(I)



M4-5(I)
M4-5(S)

(I) INDICATES WHITE LEGEND ON BLUE BACKGROUND (INTERSTATE)
(S) INDICATES BLACK LEGEND ON SILVER BACKGROUND (STATE)

STATE	M2-1(S)	M2-1-(S)	M4-5(S)	M4-5-(S)
INTERSTATE	M2-1(I)	M2-1-(I)	M4-5(I)	M4-5-(I)
SHIELD SIZES	24" x 24" 30" x 24"	36" x 36" 45" x 36"	24" x 24" 30" x 24"	36" x 36" 45" x 36"
CORRESPONDING SIGN SIZE	21" x 15"	21" x 15"	24" x 21"	30" x 15"

INDIANA DEPARTMENT OF TRANSPORTATION

ROUTE MARKER DETAILS

SEPTEMBER 2010

STANDARD DRAWING NO. E 802-SNGS-01

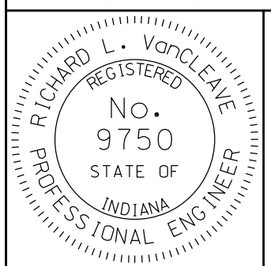

DESIGN STANDARDS ENGINEER

/s/ Richard L. VanCleave 09/01/10
DESIGN STANDARDS ENGINEER DATE

/s/ Mark A. Miller 09/01/10
CHIEF HIGHWAY ENGINEER DATE



WHITE BACKGROUND WITH BLACK
LETTERS, NUMERALS AND BORDER

M1-5

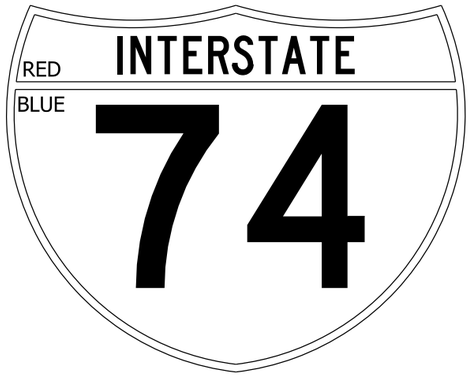

WHITE LETTERS, NUMERALS, AND BORDER

M1-1

STATE ROUTE MARKER

M1-5					
12" NUMERALS		18" NUMERALS		24" NUMERALS	
2 DIGITS	3 DIGITS	2 DIGITS	3 DIGITS	2 DIGITS	3 DIGITS
24" x 24"	30' x 24"	36" x 36"	45" x 36"	48" x 48"	60" x 48"

INTERSTATE SHIELD

M1-1					
12" NUMERALS		18" NUMERALS		24" NUMERALS	
2 DIGITS	3 DIGITS	2 DIGITS	3 DIGITS	2 DIGITS	3 DIGITS
24" x 24"	30' x 24"	36" x 36"	45" x 36"	48" x 48"	60" x 48"

INDIANA DEPARTMENT OF TRANSPORTATION

ROUTE MARKER DETAILS

SEPTEMBER 2010

STANDARD DRAWING NO. E 802-SNGS-02

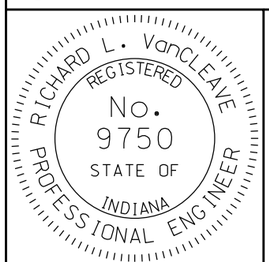

DESIGN STANDARDS ENGINEER

/s/ Richard L. VanCleave *09/01/10*
DESIGN STANDARDS ENGINEER — DATE

/s/ Mark A. Miller *09/01/10*
CHIEF HIGHWAY ENGINEER — DATE

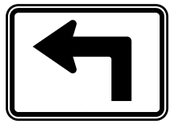

M5-1 (R or L) (I or S)

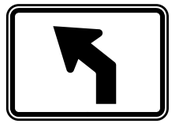

M5-2 (R or L) (I or S)

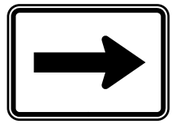

M6-1 (R or L) (I or S)

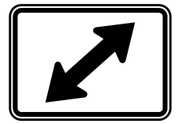

M6-5 (R or L) (I or S)

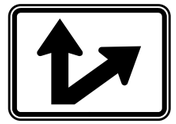

M6-7 (R or L) (I or S)



M6-2 (R or L) (I or S)



M6-3 (I or S)

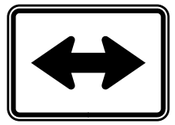

M6-4 (I or S)

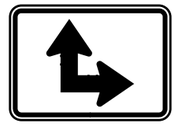

M6-6 (R or L) (I or S)

STATE	M5-1(S) M6-1(S) M6-3(S) M6-5(S) M6-7(S) M5-2(S) M6-2(S) M6-4(S) M6-6(S)	
INTERSTATE	M5-1(I) M6-1(I) M6-3(I) M6-5(I) M6-7(I) M5-2(I) M6-2(I) M6-4(I) M6-6(I)	
SHIELD SIZES	24" x 24" 30" x 24"	36" x 36" 45" x 36"
CORRESPONDING SIGN SIZE	21" x 15"	21" x 15"



M3-1 *
(S or I)



M3-2 *
(S or I)

* Note: Make 1st letter 10% taller



M3-3 *
(S or I)



M3-4 *
(S or I)

STATE	M3-1(S) M3-2(S) M3-3(S) M3-4(S)			
INTERSTATE	M3-1(I) M3-2(I) M3-3(I) M3-4(I)			
SHIELD SIZES	24" x 24"	30" x 24"	36" x 36"	45" x 36"
CORRESPONDING SIGN SIZE	24" x 12"	30" x 15"	30" x 15"	30" x 15"

INDIANA DEPARTMENT OF TRANSPORTATION

ROUTE MARKER DETAILS

SEPTEMBER 2010

STANDARD DRAWING NO. E 802-SNGS-03

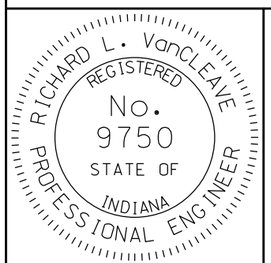

DESIGN STANDARDS ENGINEER

/s/ Richard L. VanCleave *09/01/10*

DESIGN STANDARDS ENGINEER — DATE

/s/ Mark A. Miller *09/01/10*

CHIEF HIGHWAY ENGINEER — DATE

GENERAL NOTES

1. All series M(S) "JCT", cardinal directions, "TO", and arrows shall be white background with black legend and border.

2. All series M(I) "JCT", cardinal directions, "TO", and arrows shall be blue background with white legend and border.

3. Numerals sometimes cannot be accommodated within the space available. For this situation, the standard series D numeral may be reduced to series C. As a second choice, use the next smaller height commonly available.

4. For independent use of sheet signs, a nylon and metal washer shall be placed between each bolt head and the face of the metal sign. See Sign Bolt Detail on Std. Dwg. No. E 802-SNGS-07.

5. Visually space numbers about vertical centerline of shield.

6. Wherever white is specified herein as a color, it is understood to include silver-colored reflecting coatings or elements that reflect white light.

7. Fabrication details for the signs shown shall be found in the Standard Highway Signs booklet. Shop drawings will be supplied on all other signs not found in such booklet

8. For hole punch pattern see shop drawings.

INDIANA DEPARTMENT OF TRANSPORTATION

ROUTE MARKER DETAILS

JANUARY 2000

STANDARD DRAWING NO. **E 802-SNGS-04**

ANTHONY L. UREMOVICH REGISTERED No. 18095 STATE OF INDIANA PROFESSIONAL ENGINEER

DESIGN STANDARDS ENGINEER

/s/ Anthony L. Uremovich 3-01-95
DESIGN STANDARDS ENGINEER — DATE

/s/ Donald W. Lucas 3-01-95
CHIEF HIGHWAY ENGINEER — DATE

SIGN	REMARKS	BACKGROUND	COPY & BORDER
IGD, GD	Directional	S-3-H	B
IGDO, GD	Directional	S-3-H	B
IGI	Information	S-3-H	B
IGS	Services	S-4-H	B
IGS	Services	S-6-H	S-2-H
IGDO, GDO Special - Panel	Warning Panel	S-1-H	A
R1-1	Stop	S-5-H	S-2-H
R1-2	Yield	S-2-H	S-5-H
R1-3, R1-4	4-Way, All-Way	S-5-H	S-2-H
R2-3	Night Speed	0-1-H	S-2-H
R3-1, R3-2, R3-4	No Right, Left, or U Turns	S-2-H	S-5-H, 0-1-H
R5-1	Do Not Enter	S-5-H	S-2-H
R5-1a	Wrong Way	S-5-H	S-2-H
R5-2, R5-6	No Trucks, Bicycles	S-2-H	S-5-H, 0-1-H
R7-1, R7-4, R7-107, R7-201	No Parking (Urban)	S-2-H	S-5-H
R7-2a, R7-107a	No Parking (Urban)	S-2-H	S-5-H, 0-1-H
R7-5, R7-5a, R7-108	Restricted Parking	S-2-H	S-7-H
R7-8	Reserved Parking	S-2-H	S-7-H, S-6-H
R8-1, R8-1a, R8-2, R8-3, R8-3b, R8-3c, R8-8	No Parking (Rural)	S-2-H	S-5-H
R8-3a	No Parking (Rural)	S-2-H	S-5-H, 0-1-H
R9-3a, R9-4a	Pedestrian Signs	S-2-H	S-5-H, 0-1-H
All other regulatory signs		S-2-H	0-1-H
W3-1a, W3-2a	Stop & Yield Ahead	S-1-H	S-2-H, S-5-H, O-1-H
W3-3	Signal Ahead	S-1-H	S-5-H S-7-H, O-1-H
All other warning signs	Except Construction Signs, School Warning Signs, and Signs labeled as "FY"	S-1-H	O-1-H
Warning Signs labeled as "FY"		S-10-H	O-1-H
All School Warning Signs		S-11-H	O-1-H
M1-1	Interstate Shields	S-8-H	S-2-H
M1-2, M1-3	Business Shields	S-7-H	S-2-H
M1-4	U.S. Shields	S-2-H	O-1-H
M1-5	County Shields	S-4-H	S-1-H
M1-6	State Shields	S-2-H	O-1-H
M1-7	National Forest	△	S-2-H

KEY

CODE	DESCRIPTION
0-1-H	Paint (Black) for use with prismatic reflective sheeting
S-1-H	Reflective sheeting (Yellow) prismatic
S-2-H	Reflective sheeting (Silver) prismatic
S-3-H	Reflective sheeting (Green) prismatic
S-4-H	Reflective sheeting (Blue) prismatic
S-5-H	Reflective sheeting (Silver with reverse screen transparent Red) prismatic
S-6-H	Reflective sheeting (Silver with reverse screen transparent Blue) prismatic
S-7-H	Reflective sheeting (Silver with reverse screen transparent Green) prismatic
S-8-H	Reflective sheeting (Silver with reverse screen transparent Red and Blue) prismatic
S-9-H	Reflective sheeting (Orange) prismatic
S-10-H	Reflective sheeting (Fluorescent Yellow), prismatic
S-11-H	Reflective sheeting (Fluorescent Yellow-Green), prismatic
A	Cut - Out letters which are painted black or as per specifications
B	Copy as per specifications
△	Brown background with prismatic reflective sheeting

SIGN IDENTIFICATION CODES

IGDO	Interstate guide directional overhead
IGD	Interstate guide directional
IGS	Interstate guide service and rest area
IGI	Interstate guide information
GDO	Guide directional overhead
GD	Guide directional
R	Regulatory sign
W	Warning, construction, & maint. signs
M	Route markers and aux. markers for assemblies
D	Destination sign
I	Information

INDIANA DEPARTMENT OF TRANSPORTATION

SIGN REFLECTORIZATION SCHEDULE

SEPTEMBER 2012

STANDARD DRAWING NO. E 802-SNGS-05

RICHARD L. VanCLEAVE REGISTERED No. 9750 STATE OF INDIANA PROFESSIONAL ENGINEER

/s/ Richard L. VanCleave 09/04/12
SUPERVISOR, ROADWAY STANDARDS DATE

/s/ Mark A. Miller 09/04/12
CHIEF ENGINEER DATE

SIGN	REMARKS	BACKGROUND	COPY & BORDER
M2-1 (I), M3-1 (I), M3-2 (I), M3-3 (I), M3-4 (I)	Auxiliary markers	S-6-H	S-2-H
M4-5 (I), M4-7 (I), M5-1 (I), M5-2 (I)	Auxiliary markers	S-6-H	S-2-H
M6-1 Through M6-7	Auxiliary markers	S-6-H	S-2-H
M4-5, M4-6, M4-6a	Auxiliary markers	S-7-H	S-2-H
M4-8, M4-9	Detour marker	S-9-H	O-1-H
all other marker Auxiliaries		S-2-H	O-1-H
D4-1	Parking	S-2-H	S-7-H
D5-5, D5-5a, D9-2, D9-6	Rest area & service	S-6-H	S-2-H
D7-2	Recreation area	△	S-2-H
All other destination signs		S-3-H	S-2-H
I-17, I-18, I-19		S-6-H	S-2-H
I-20, I-21		S-2-H	O-1-H
All other I-Signs		S-7-H	S-2-H
All construction signs		S-9-H	O-1-H
All maintenance signs		S-9-H	O-1-H

NOTE: Wherever white is specified herein as a color, it is understood to include silver-colored reflecting coatings or elements that reflect white light.

KEY

CODE	DESCRIPTION
0-1-H	Paint (Black) for use with prismatic reflective sheeting
S-1-H	Reflective sheeting (Yellow) prismatic
S-2-H	Reflective sheeting (Silver) prismatic
S-3-H	Reflective sheeting (Green) prismatic
S-4-H	Reflective sheeting (Blue) prismatic
S-5-H	Reflective sheeting (Silver with reverse screen transparent Red) prismatic
S-6-H	Reflective sheeting (Silver with reverse screen transparent Blue) prismatic
S-7-H	Reflective sheeting (Silver with reverse screen transparent Green) prismatic
S-8-H	Reflective sheeting (Silver with reverse screen transparent Red and Blue) prismatic
S-9-H	Reflective sheeting (Orange) prismatic
A	Cut - Out letters which are painted black or as per specifications
B	Copy as per specifications
△	Brown background with prismatic reflective sheeting

SIGN IDENTIFICATION CODES

IGDO	Interstate guide directional overhead
IGD	Interstate guide directional
IGS	Interstate guide service and rest area
IGI	Interstate guide information
GDO	Guide directional overhead
GD	Guide directional
R	Regulatory sign
W	Warning, construction, & maint. signs
M	Route markers and aux. markers for assemblies
D	Destination sign
I	Information

INDIANA DEPARTMENT OF TRANSPORTATION

SIGN REFLECTORIZATION SCHEDULE

SEPTEMBER 2010

STANDARD DRAWING NO. E 802-SNGS-06

RICHARD L. VanCLEAVE REGISTERED No. 9750 STATE OF INDIANA PROFESSIONAL ENGINEER

DESIGN STANDARDS ENGINEER

/s/ Richard L. VanCleave 09/01/10
DESIGN STANDARDS ENGINEER DATE

/s/ Mark A. Miller 09/01/10
CHIEF HIGHWAY ENGINEER DATE

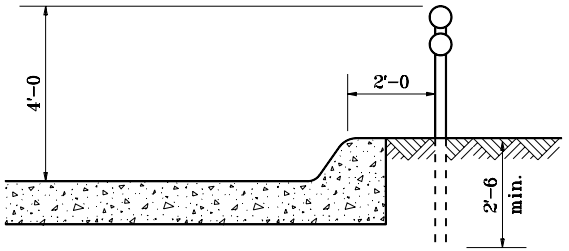

UNMOUNTABLE CURB SECTION

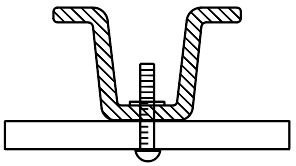

MOUNTING DETAIL

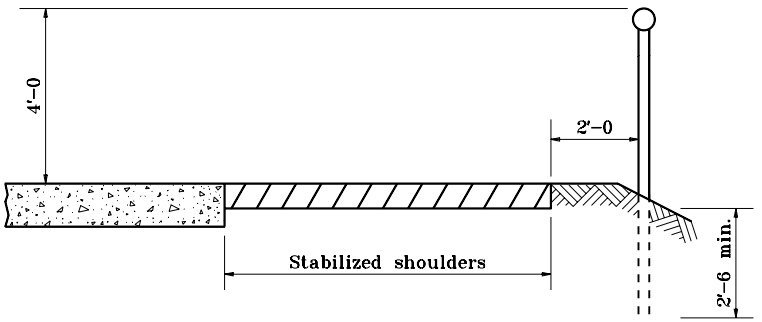

SHOULDER SECTION

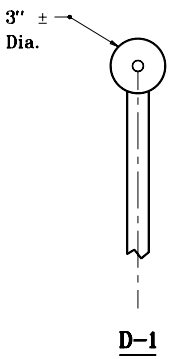

D-1

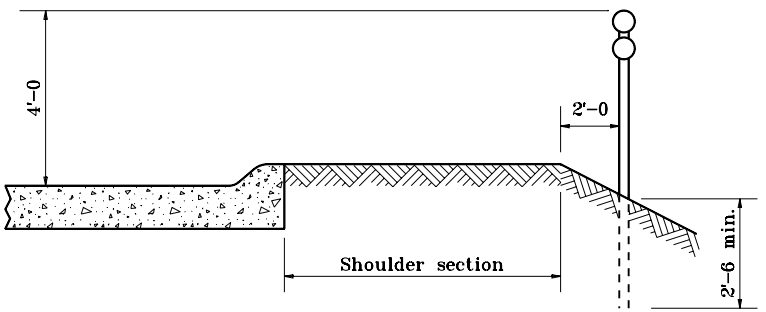

MOUNTABLE CURB SECTION

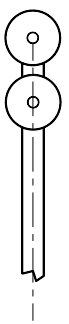

D-2

DELINEATOR DETAILS

GENERAL NOTES

1. Post to be type A flange posts.
2. Mileposts shall be installed in accordance with Interstate Sign Manual.

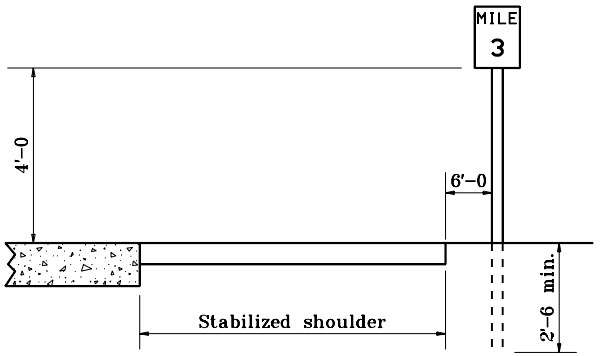

TYPICAL MILE or REFERENCE POST

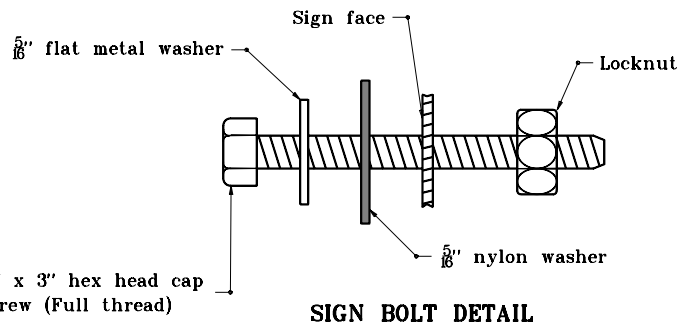

SIGN BOLT DETAIL

INDIANA DEPARTMENT OF TRANSPORTATION

MISC. SIGN DETAILS

MARCH 1995

STANDARD DRAWING NO. E 802-SNGS-07

ANTHONY L. UREMOVICH REGISTERED No. 18095 STATE OF INDIANA PROFESSIONAL ENGINEER

DESIGN STANDARDS ENGINEER

DETAILS PLACED IN THIS FORMAT	11-15-99
/s/ Anthony L. Uremovich	11-15-99
DESIGN STANDARDS ENGINEER	DATE
/s/ Firooz Zandi	11-15-99
CHIEF HIGHWAY ENGINEER	DATE
ORIGINALLY APPROVED	3-01-95

GENERAL NOTES

1. Nut shall be tightened sufficiently so that the sign is held firmly against the post. However, there shall be no deformation of aluminum sheeting or twisting or damage to the reflective sheeting.

2. Signs shall be fastened to the posts with bolts, metal and nylon washers and locknut.

3. A nylon washer and a metal washer shall be placed between each bolt head and the face of the sign.

4. Flanged channel posts are as specified and as shown on the plans.

5. The sheet signs shall be punched or drilled for mounting such that the vertical hole spacing is in equal increments of millimeters.

6. See Std. Dwg. No. E 802-SNPL-02 for mounting height and lateral locations of signs.

7. Splicing of flanged channel post will not be permitted.

8. Bolt can either be stainless steel or galvanized steel bolt.

INDIANA DEPARTMENT OF TRANSPORTATION

MISC. SIGN DETAILS
GENERAL NOTES

MAY 1999

STANDARD DRAWING NO. **E 802-SNGS-08**

ANTHONY L. UREMOVICH REGISTERED No. 18095 STATE OF INDIANA PROFESSIONAL ENGINEER

DESIGN STANDARDS ENGINEER

DETAILS PLACED IN THIS FORMAT 11-15-99

/s/ Anthony L. Uremovich 11-15-99
DESIGN STANDARDS ENGINEER DATE

/s/ Firooz Zandi 11-15-99
CHIEF HIGHWAY ENGINEER DATE

ORIGINALLY APPROVED 5-03-99

MOUNTING HEIGHT / WIDTH X HEIGHT ("W x H")	5 ft		6 ft		7 ft		8 ft	
	U CHANNEL	SQUARE POST	U CHANNEL	SQUARE POST	U CHANNEL	SQUARE POST	U CHANNEL	SQUARE POST
12 x 12, 12 x 6, 12 x 9 12 x 12, 12 x 18, 12 x 30	1-A	1-Type 1	1-A	1-Type 1	1-A	1-Type 1	1-A	1-Type 1
12 x 36	1-A		1-A		1-A		1-A	
18 x 6, 18 x 12, 18 x 18	1-A		1-A		1-A		1-A	
18 x 24	1-A		1-A		1-A		1-A	
18 x 30	1-A		1-A		1-A		1-A	
18 x 48	1-A		1-A		1-A		1-A	
24 x 12, 24 x 18, 24 x 24	1-A		1-A		1-A		1-A	
24 x 30	1-A		1-A		1-A		1-A	
24 x 36	1-A		1-A		1-A		1-A	
30 x 18	1-A		1-A		1-A		1-A	
30 x 24	1-A		1-A		1-A		1-A	
30 x 30	1-A		1-A		1-A		1-A	
30 x 36	1-A		1-A		1-A		1-A	
30 x 42	1-B		1-B		1-B		1-B	
30 x 48	1-B		1-B		1-B		1-B	
36 x 12	2-A		2-A		2-A		2-A	
36 x 18	2-A		2-A		2-A		2-A	
36 x 24	2-A		2-A		2-A		2-A	
36 x 36	2-A		2-A		2-A		2-A	
36 x 48	2-A		2-A		2-A		2-A	
42 x 18	2-A		2-A		2-A		2-B	
42 x 24	2-A		2-A		2-A		2-A	
42 x 30	2-A		2-A		2-A		2-A	
42 x 36	2-A		2-A		2-A		2-A	
48 x 16	2-A		2-A		2-A		2-A	
48 x 18	2-A		2-A		2-A		2-A	
48 x 24	2-A		2-A		2-A		2-A	
48 x 30	2-A		2-A		2-A		2-A	
48 x 36	2-A	2-Type 2	2-A	2-Type 2	2-A	2-Type 2	2-A	2-Type 2
48 x 48	2-A		2-B		2-B		2-B	
48 x 60	2-B		2-B		2-B		2-B	
60 x 24	2-A		2-A		2-A		2-A	
60 x 30	2-A		2-A		2-A		2-A	
60 x 36	2-A		2-A		2-B		2-B	
60 x 48	2-B		2-B		2-B		2-B	
72 x 24	2-A		2-A		2-A		2-A	
72 x 36	2-B		2-B		2-B		2-B	
90 x 36 120 x 36	2-B	2-Type 3	2-B	2-Type 3	2-B	2-Type 3	2-B	2-Type 3

GENERAL NOTES

1. See Standard Sheet E 802-SNGS-10 for square steel sign post installation details.
2. The type 1 post shall be 2¼ in. x 2¼in. x 12 ga. wall thickness.
3. The type 2 post shall be 2 in. x 2 in. x 12 ga. wall thickness.
4. The type 3 post shall be $2\frac{1}{2}$ in. x $2\frac{1}{2}$ in. x 12 ga. wall thickness.

INDIANA DEPARTMENT OF TRANSPORTATION

STEEL SIGN POSTS

SEPTEMBER 2006

STANDARD DRAWING NO. E 802-SNGS-09

RICHARD L. VANCLEAVE REGISTERED No. 9750 STATE OF INDIANA PROFESSIONAL ENGINEER

DESIGN STANDARDS ENGINEER

/s/ Richard L. VanCleave 9-01-06
DESIGN STANDARDS ENGINEER DATE

/s/ Richard K. Smutzer 9-01-06
CHIEF HIGHWAY ENGINEER DATE

SQUARE POST

12 ga. Thickness

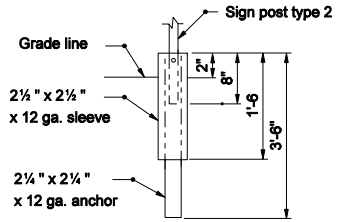

REINFORCED ANCHOR BASE

SQUARE POST

12 ga. Thickness

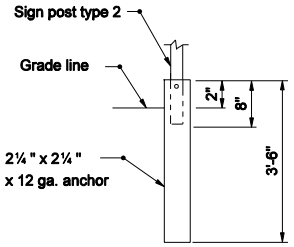

UNREINFORCED ANCHOR BASE

SQUARE POST

12 ga. Thickness

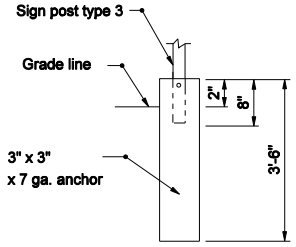

UNREINFORCED ANCHOR BASE

SQUARE POST

12 ga. Thickness

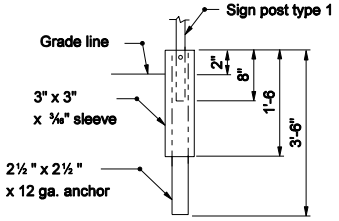

REINFORCED ANCHOR BASE

SQUARE POST

12 ga. Thickness

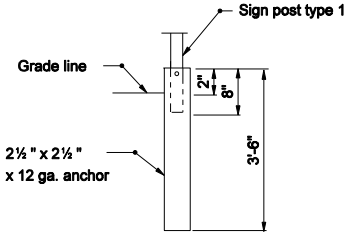

UNREINFORCED ANCHOR BASE

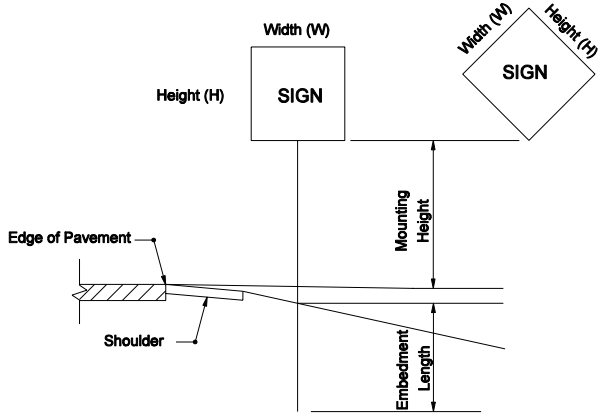

POST	TYPE	WALL THICKNESS	NO. OF POSTS PERMITTED IN 7 ft PATH	EMBEDMENT LENGTH
U-CHANNEL	A , B		1 OR 2	3'-6"
SQUARE	1	12 ga.	1	ANCHOR BASE
	2	12 ga.	1 OR 2	
	3	12 ga.	1	

GENERAL NOTES:

1. See Standard Drawing E-802-SNGS-09 for sign size and E802-SNPL-02 for mounting height table.

INDIANA DEPARTMENT OF TRANSPORTATION

STEEL SIGN POSTS

SEPTEMBER 2006

STANDARD DRAWING NO. E 802-SNGS-10

RICHARD L. VanCLEAVE REGISTERED No. 9750 STATE OF INDIANA PROFESSIONAL ENGINEER

DESIGN STANDARDS ENGINEER

/s/ Richard L. VanCleave 9-01-06
DESIGN STANDARDS ENGINEER DATE

/s/ Richard K. Smutzer 9-01-06
CHIEF HIGHWAY ENGINEER DATE

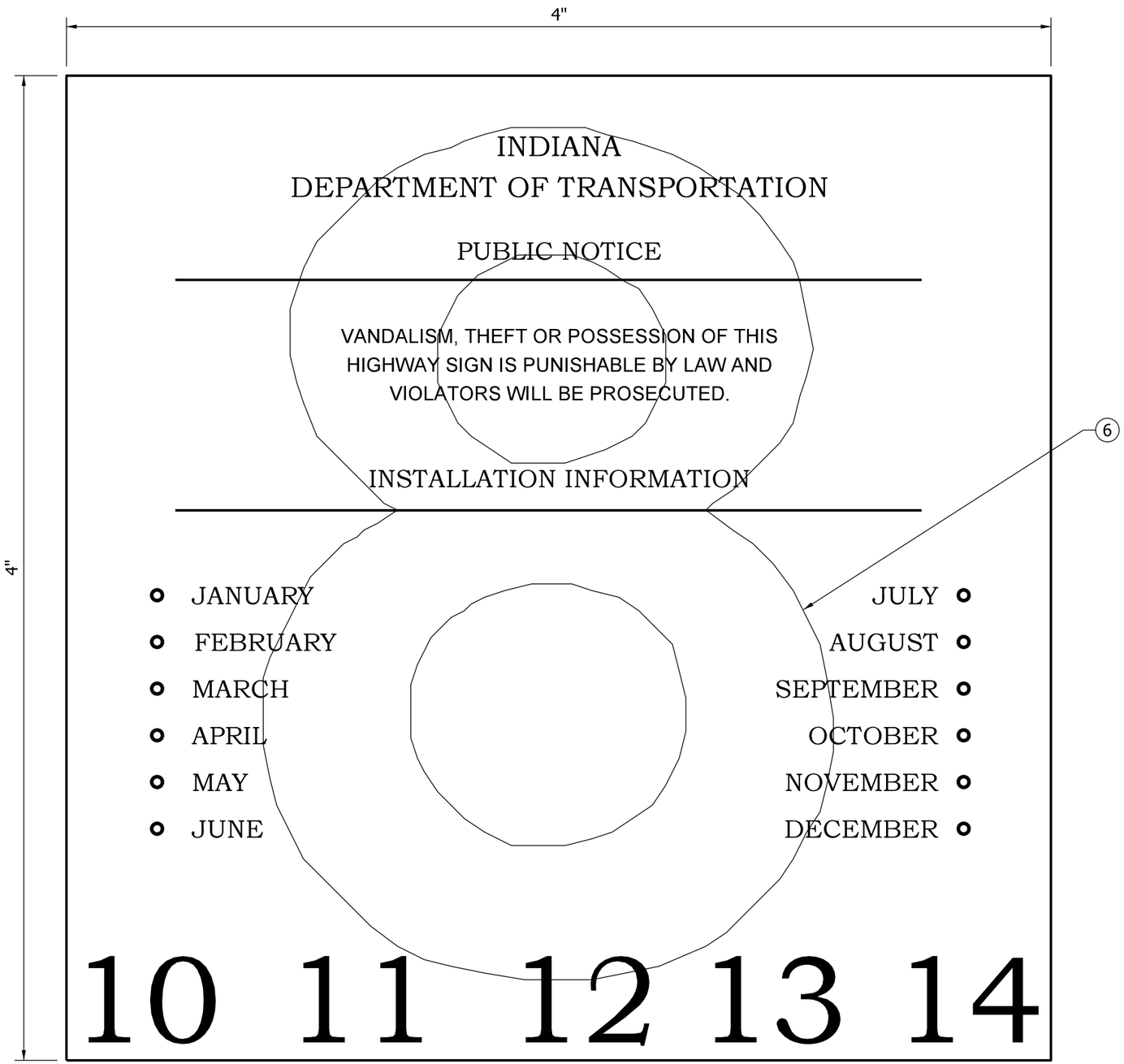

NOTES:

1. Height of lettering shall be 1/8" to 1/4". The height of the dates along the bottom shall be 1/2".
2. Copy shall be black on reflectorized white background
3. The number of dates along the bottom need not be five, and the first date need not be 07. However, the installation date shall be shown.
4. The month and year of installation shall be punched by a 1/4" minimum diameter hole.
5. The overlay number to be of colored transparent sheeting to indicate the last digit of the year of installation.

(6) The decade of installation shall be indicated by color of transparent sheeting:

2010 - 2019 Red
2020 - 2029 Brown
2030 - 2039 Orange

INDIANA DEPARTMENT OF TRANSPORTATION

SIGN IDENTIFICATION
MARKING

SEPTEMBER 2010

STANDARD DRAWING NO. E 802-SNGS-11

RICHARD L. VanCLEAVE
REGISTERED
No. 9750
STATE OF INDIANA
PROFESSIONAL ENGINEER

DESIGN STANDARDS ENGINEER

/s/ Richard L. VanCleave 09/01/10
DESIGN STANDARDS ENGINEER DATE

/s/ Mark A. Miller 09/01/10
CHIEF HIGHWAY ENGINEER DATE

Wide Flange Post Selection Table

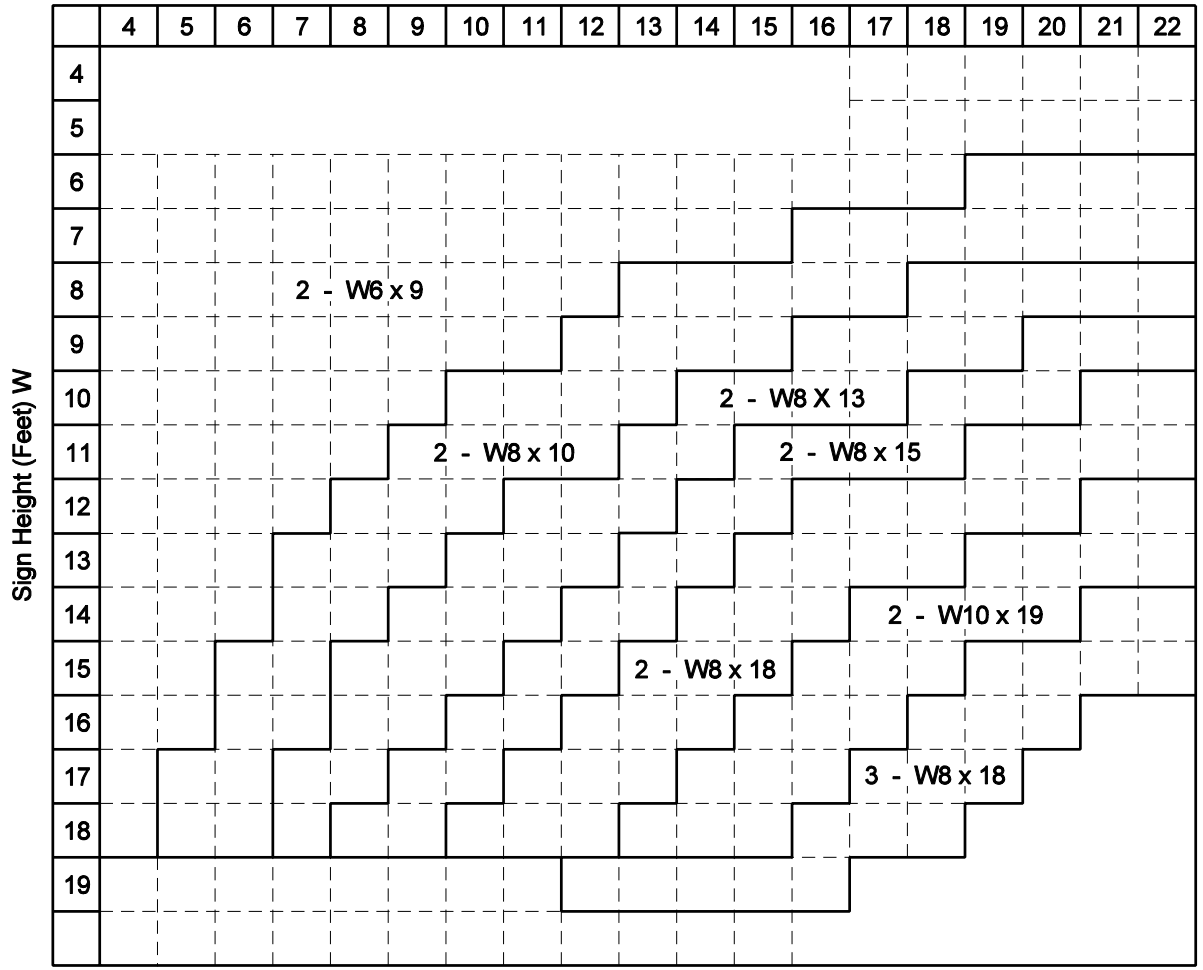

INDIANA DEPARTMENT OF TRANSPORTATION

WIDE FLANGE POST SELECTION TABLE

MARCH 2004

STANDARD DRAWING NO. E 802-SNGS-12

RICHARD L. VanCLEAVE REGISTERED No. 9750 STATE OF INDIANA PROFESSIONAL ENGINEER

DESIGN STANDARDS ENGINEER

/s/ Richard L. VanCleave 3-01-04
DESIGN STANDARDS ENGINEER DATE

/s/ Richard K. Smutzer 3-01-04
CHIEF HIGHWAY ENGINEER DATE

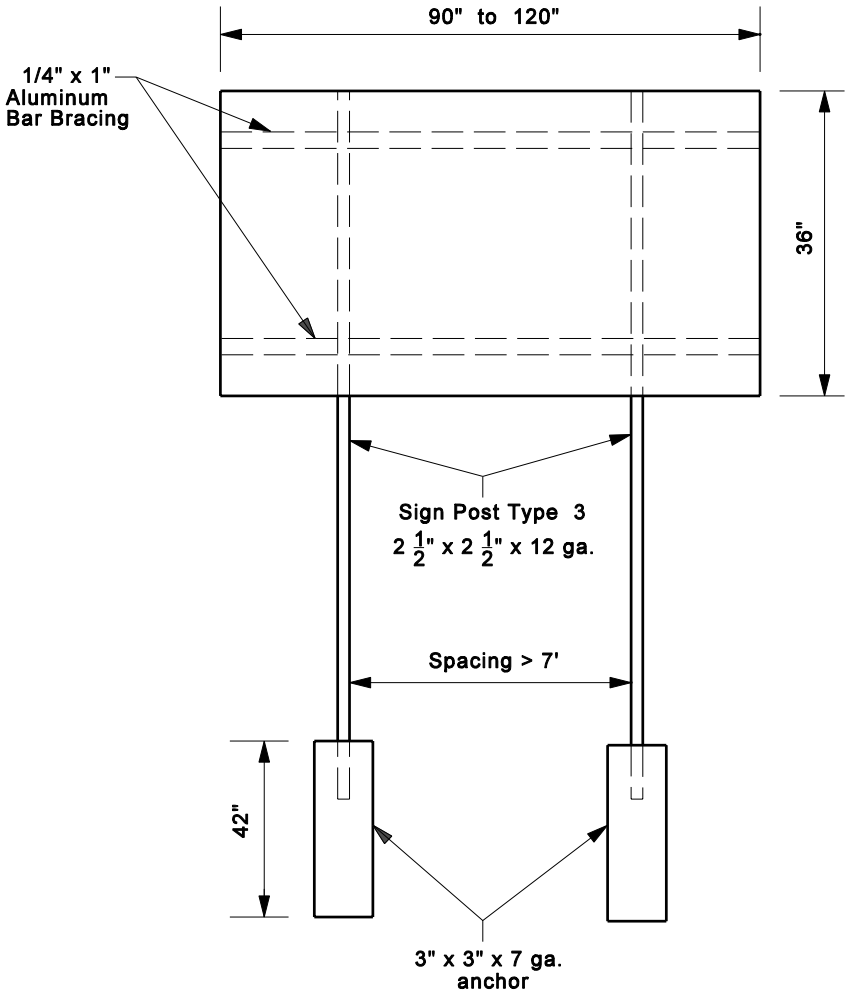

UNREINFORCED ANCHOR BASE

NOTES

1. Maximum Sign Width 120", Height 36".

INDIANA DEPARTMENT OF TRANSPORTATION

STEEL SIGN POSTS

SEPTEMBER 2006

STANDARD DRAWING NO. E 802-SNGS-13

RICHARD L. VanCLEAVE REGISTERED No. 9750 STATE OF INDIANA PROFESSIONAL ENGINEER

DESIGN STANDARDS ENGINEER

/s/ Richard L. VanCleave 9-01-06
DESIGN STANDARDS ENGINEER DATE

/s/ Richard K. Smutzer 9-01-06
CHIEF HIGHWAY ENGINEER DATE

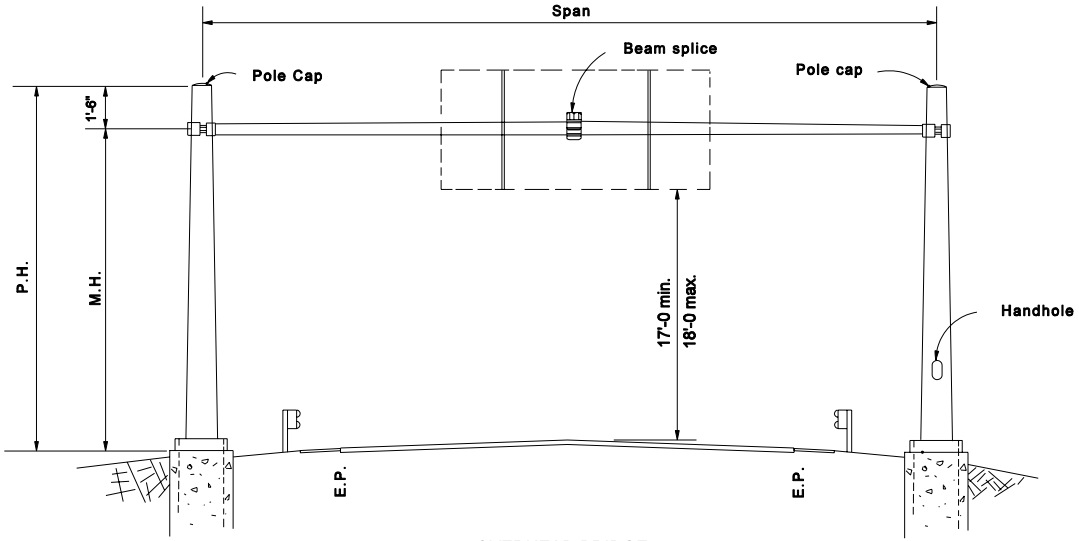

OVERHEAD BRIDGE

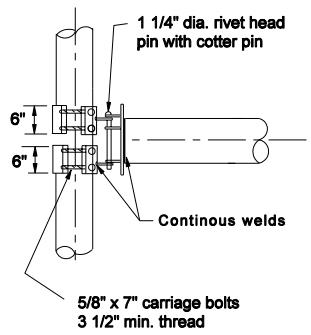

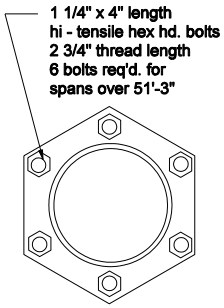

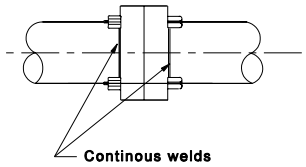

BEAM SPLICE

All Dimension are in mm unless otherwise specfied

INDIANA DEPARTMENT OF TRANSPORTATION

OVERHEAD SIGN BRIDGE SPANS

MARCH 2004

STANDARD DRAWING NO. E 802-SNOB-01

RICHARD L. VanCLEAVE REGISTERED No. 9750 STATE OF INDIANA PROFESSIONAL ENGINEER

DESIGN STANDARDS ENGINEER

/s/ Richard L.VanCleave 3-01-04
DESIGN STANDARDS ENGINEER DATE

/s/ Richard K.Smutzer 3-01-04
CHIEF HIGHWAY ENGINEER DATE

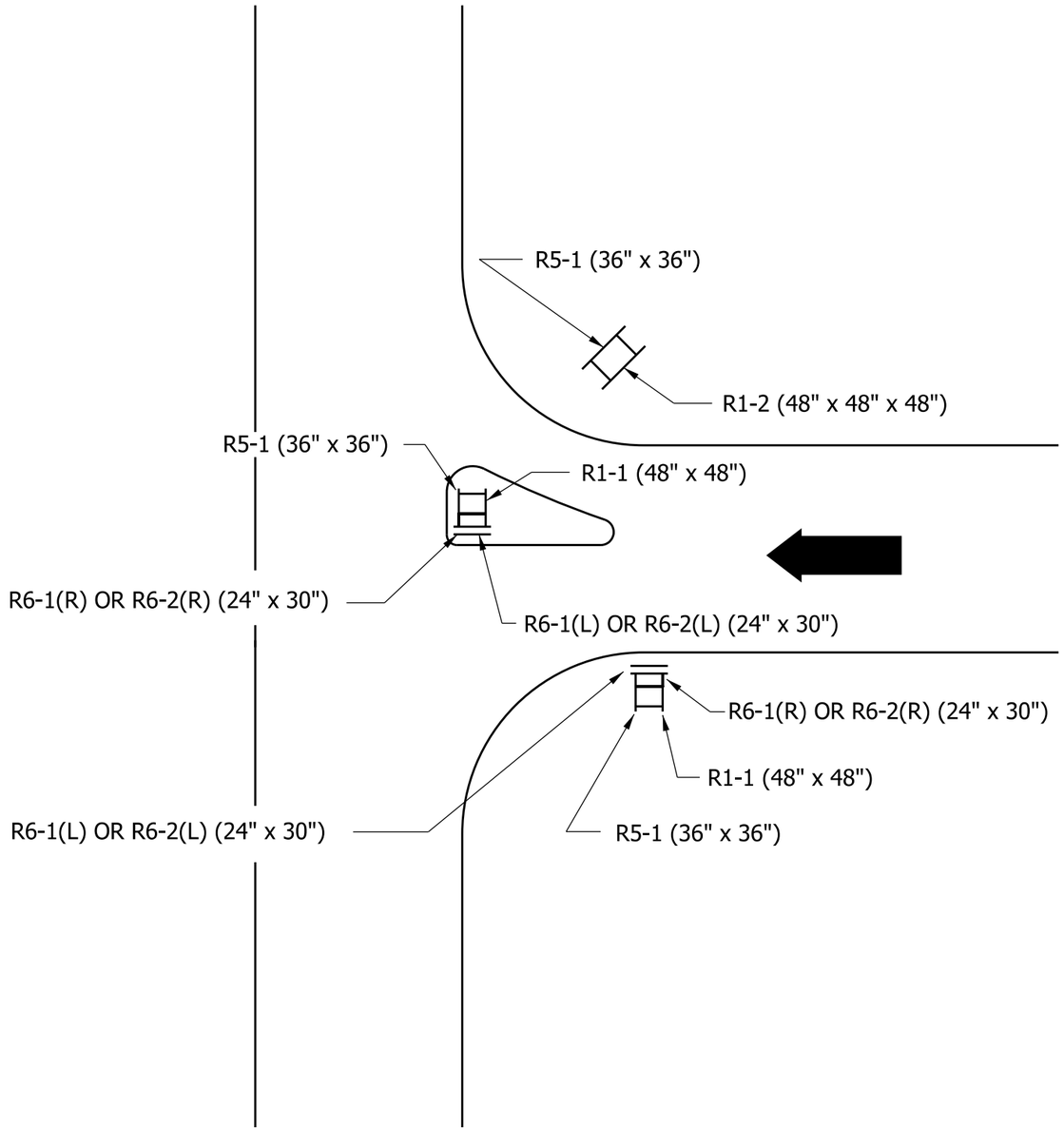

INDIANA DEPARTMENT OF TRANSPORTATION

SIGN DETAILS
TYPICAL LOCATION

SEPTEMBER 2010

STANDARD DRAWING NO. E 802-SNPL-01

RICHARD L. VanCLEAVE
REGISTERED
No. 9750
STATE OF INDIANA
PROFESSIONAL ENGINEER

DESIGN STANDARDS ENGINEER

/s/ Richard L. VanCleave *09/01/10*
DESIGN STANDARDS ENGINEER — DATE

/s/ Mark A. Miller *09/01/10*
CHIEF HIGHWAY ENGINEER — DATE

TYPE OF ROADWAY CLEARANCE	INTERSTATE AND DIVIDED HIGHWAY WITH SHOULDER, RURAL & URBAN	DIVIDED HIGHWAY WITH CURB, RURAL & URBAN	NON-DIVIDED HIGHWAY, RURAL OR CITY STREET	NON-DIVIDED HIGHWAY, URBAN
VERTICAL: EDGE OF TRAVELED WAY PAVEMENT TO BOTTOM OF SIGN OR SIGNS	7 ft TO 7.5 ft ①	7 ft TO 7.5 ft ②	5 ft TO 5.5 ft ④ ②	7 ft TO 7.5 ft ②
HORIZONTAL: EDGE OF TRAVELED WAY PAVEMENT TO EDGE OF SIGN OR SIGNS	12 ft min. or 6 ft min. from the shoulder, whichever is greater	6 ft min. ③	12 ft min. or 6 ft min. from the shoulder, whichever is greater	12 ft min. or 6 ft min. from the shoulder, whichever is greater ③

NOTES:

① If a secondary sign is mounted below another sign, the secondary sign shall be installed at least 5 ft. above the level of the pavement edge.

② The height to the bottom of a secondary sign mounted below another sign may be 1 ft. less than the height specified above.

③ In urban areas where lateral offsets are limited, a minimum lateral offset of 2 ft. may be used. A minimum offset of 1 ft. from the face of the curb may be used in urban areas where sidewalk width is limited or where existing poles are close to the curb.

④ Where parking or pedestrian movements occur on an expected recurring basis, the clearance to the bottom of the sign shall be at least 7 ft.

INDIANA DEPARTMENT OF TRANSPORTATION

HORIZONTAL AND VERTICAL SHEET SIGN CLEARENCE

SEPTEMBER 2003

STANDARD DRAWING NO. E 802-SNPL-02

RICHARD L. VanCLEAVE REGISTERED No. 9750 STATE OF INDIANA PROFESSIONAL ENGINEER

DESIGN STANDARDS ENGINEER

/s/ Richard L. VanCleave 9-02-03
DESIGN STANDARDS ENGINEER DATE

/s/ Richard K. Smutzer 9-02-03
CHIEF HIGHWAY ENGINEER DATE

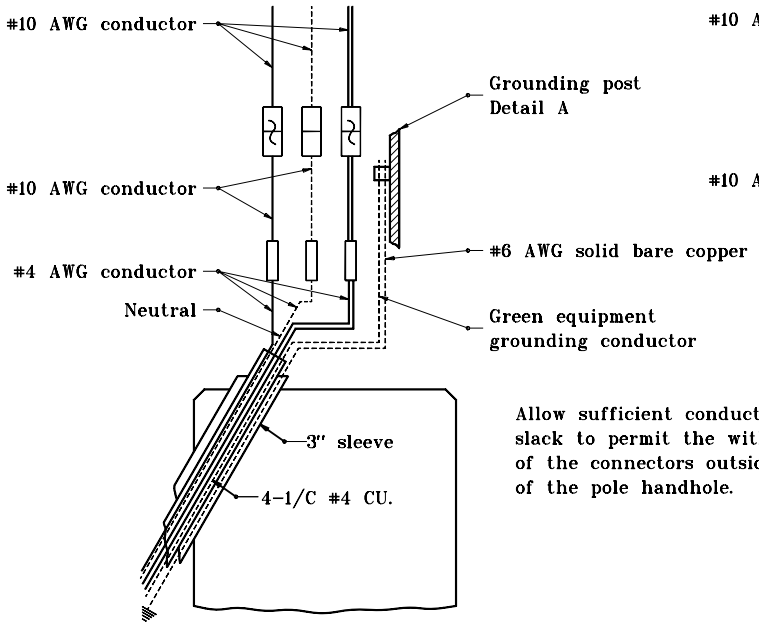

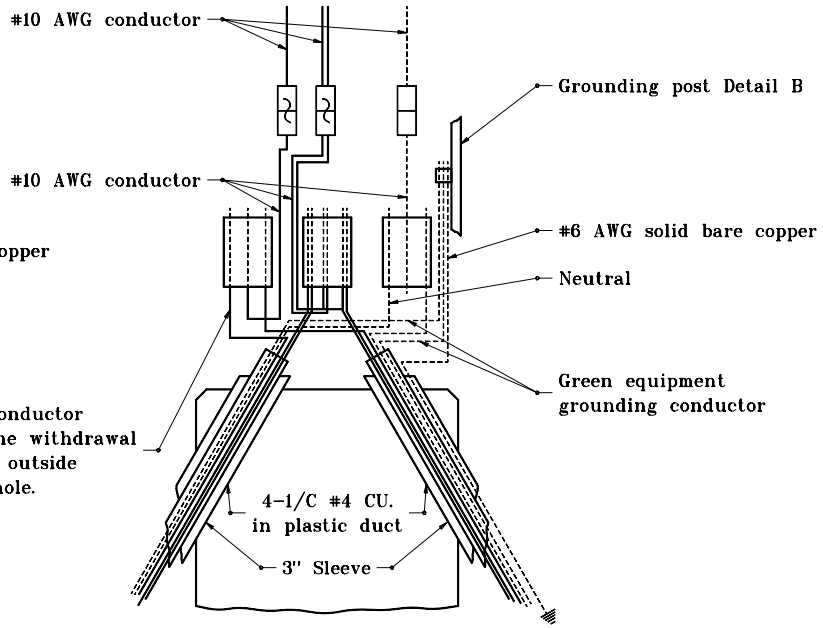

OVERHEAD SIGN SERVICE DETAIL
(UNDERGROUND CONNECTIONS)

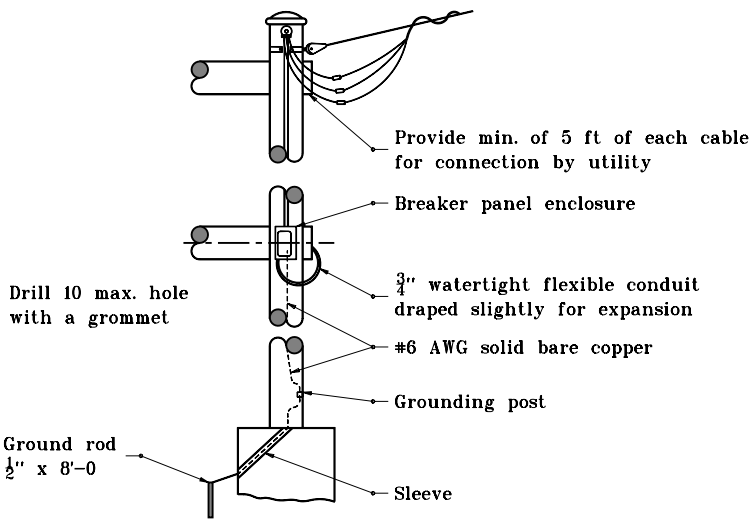

OVERHEAD SIGN SERVICE DETAIL
(AERIAL CONNECTION)

GENERAL NOTES

1. Breaker panel wiring to be used with bridge bracket sign illumination, or when lighting overhead sign is not part of a roadway lighting system.

2. Oxidation inhibitor shall be liberally applied to all surfaces that mate with a dissimilar material.

LEGEND

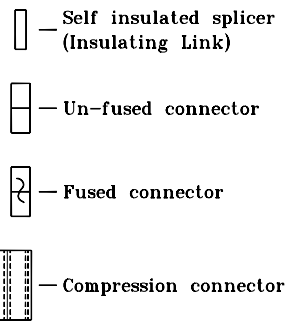

INDIANA DEPARTMENT OF TRANSPORTATION

SIGN WIRING DETAILS

SEPTEMBER 2001

STANDARD DRAWING NO. E 802-SNWR-01

ANTHONY L. UREMOVICH REGISTERED No. 18095 STATE OF INDIANA PROFESSIONAL ENGINEER

DESIGN STANDARDS ENGINEER

/s/ Anthony L. Uremovich 9-04-01
DESIGN STANDARDS ENGINEER — DATE

/s/ Firooz Zandi 9-04-01
CHIEF HIGHWAY ENGINEER — DATE

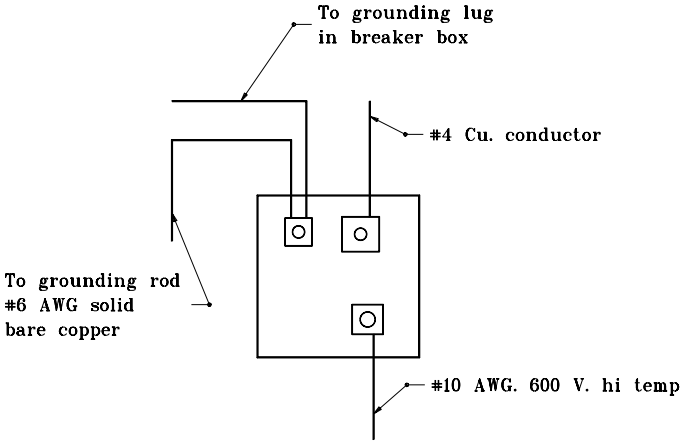

NEUTRAL GROUND LUG DETAIL B

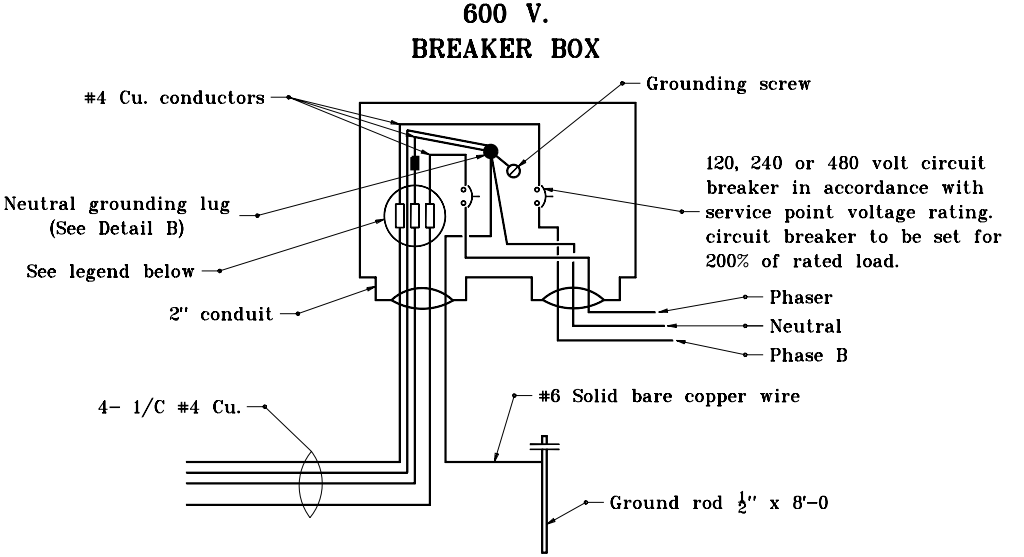

BREAKER BOX WIRING DETAIL

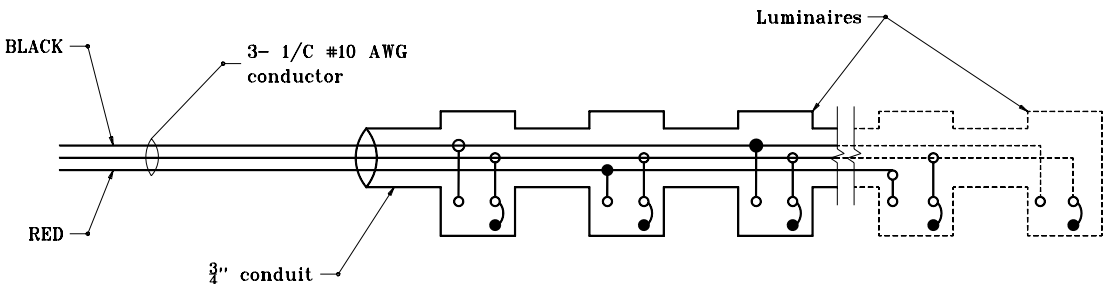

Alternate connections to balance load.

(For connection to 120 V. or 240 V. phase to neutral)

LUMINAIRE WIRING DETAIL

LEGEND



GENERAL NOTES

1. Breaker panel wiring to be used with bridge bracket sign illumination, or when lighting overhead sign is not a roadway lighting system.
2. Oxidation inhibitor shall be liberally applied to all surfaces that mate with a dissimilar material.

INDIANA DEPARTMENT OF TRANSPORTATION

SIGN WIRING DETAILS

SEPTEMBER 2001

STANDARD DRAWING NO. E 802-SNWR-02

ANTHONY L. UREMOVICH REGISTERED No. 18095 STATE OF INDIANA PROFESSIONAL ENGINEER

DESIGN STANDARDS ENGINEER

/s/ Anthony L. Uremovich 9-04-01
DESIGN STANDARDS ENGINEER — DATE

/s/ Firooz Zandi 9-04-01
CHIEF HIGHWAY ENGINEER — DATE

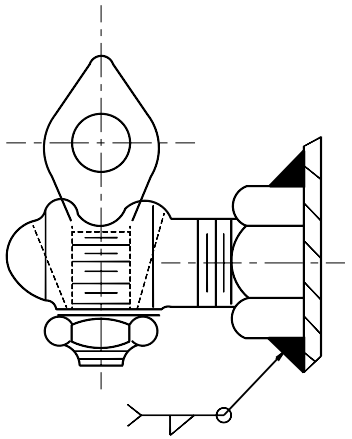

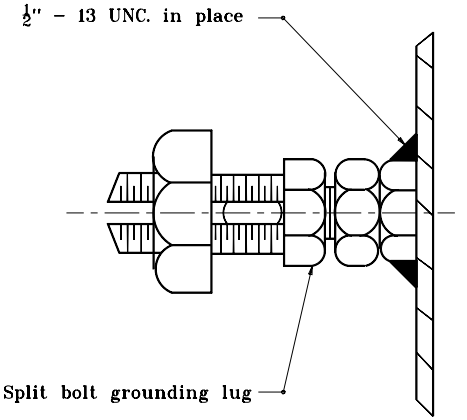

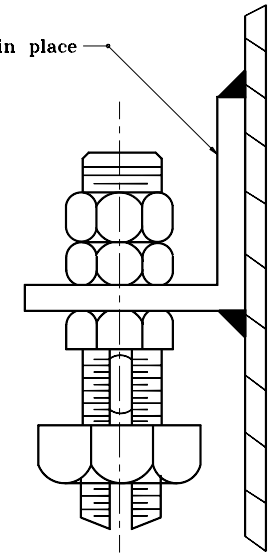

GENERAL NOTES

1. Oxidation inhibitor shall be liberally applied to all surfaces that mate with a dissimilar material.

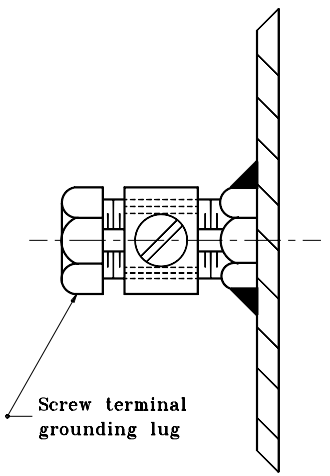

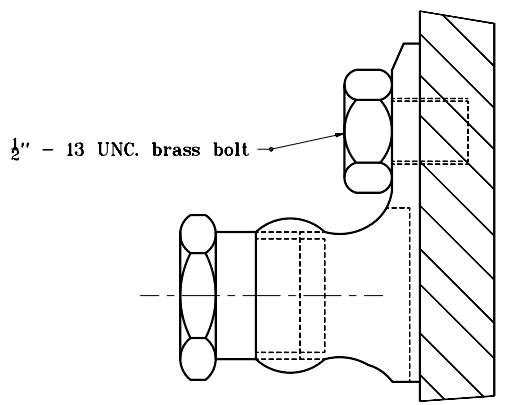

ALTERNATIVE GROUNDING POSTS DETAIL A

INDIANA DEPARTMENT OF TRANSPORTATION

SIGN WIRING DETAILS

SEPTEMBER 2001

STANDARD DRAWING NO. **E 802-SNWR-03**

ANTHONY L. UREMOVICH REGISTERED No. 18095 STATE OF INDIANA PROFESSIONAL ENGINEER

DESIGN STANDARDS ENGINEER

/s/ Anthony L. Uremovich 9-04-01
DESIGN STANDARDS ENGINEER — DATE

/s/ Firooz Zandi 9-04-01
CHIEF HIGHWAY ENGINEER — DATE

GENERAL NOTES

1. Oxidation inhibitor shall be liberally applied to all surfaces that mate with a dissimilar material.
2. Grooves A & B to receive 1 #4 Cu. conductor.
3. Groove C to receive 1 #10 conductor.
4. Use of inhibiting compound is mandatory for all connections.
5. Multiple compression fitting shall be covered with snap-on fiber or plastic covers. Taping shall not be permitted.

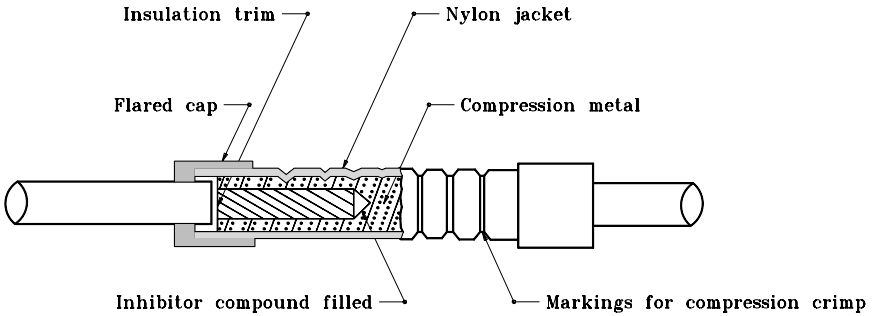

INSULATING LINK DETAIL

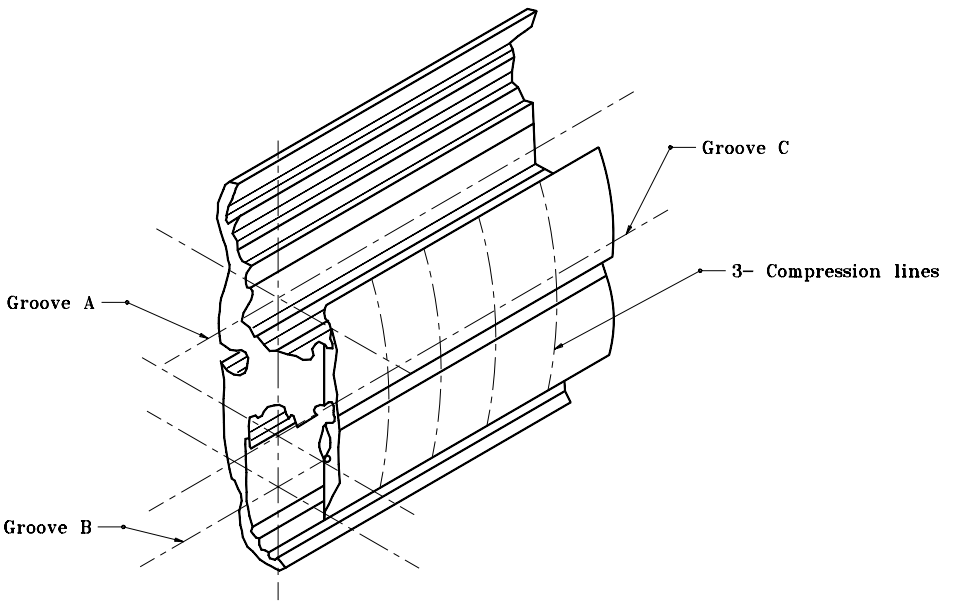

MULTIPLE COMPRESSION FITTING DETAIL

INDIANA DEPARTMENT OF TRANSPORTATION

SIGN WIRING DETAILS

SEPTEMBER 2001

STANDARD DRAWING NO. **E 802-SNWR-04**

ANTHONY L. UREMOVICH REGISTERED No. 18095 STATE OF INDIANA PROFESSIONAL ENGINEER

DESIGN STANDARDS ENGINEER

/s/ Anthony L. Uremovich 9-04-01
DESIGN STANDARDS ENGINEER — DATE

/s/ Firooz Zandi 9-04-01
CHIEF HIGHWAY ENGINEER — DATE

INDEX	
SHEET NO.	SUBJECT
1	Index
2	Plan & Elevation
3	Isometric Views
4	Panel Dimensions, Spans 36' thru 83'
5	Panel Dimensions, Spans 84' thru 130'
6	Member Sizes and Camber
7	Connection Details
8	Connection and Welding Details
9	Chord Flange Details
10	Top Cap and Chord End Plate Details
11	Sign Attachment Details
12	Base Plate, Anchor Bolt, and I.D. Tag Details
13	Handhole Details
14	Drilled Shaft Foundation
15	Spread Foundation

INDIANA DEPARTMENT OF TRANSPORTATION

TRI-CHORD SIGN STRUCTURE
DRAWING INDEX

SEPTEMBER 2013

STANDARD DRAWING NO. E 802-TCSS-01

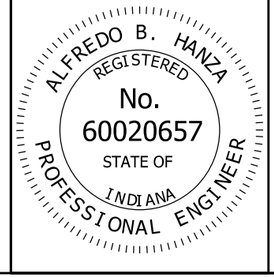

/s/ Alfredo B. Hanza *02/22/13*
DESIGN STANDARDS ENGINEER DATE

/s/ Mark A. Miller *03/27/13*
CHIEF ENGINEER DATE

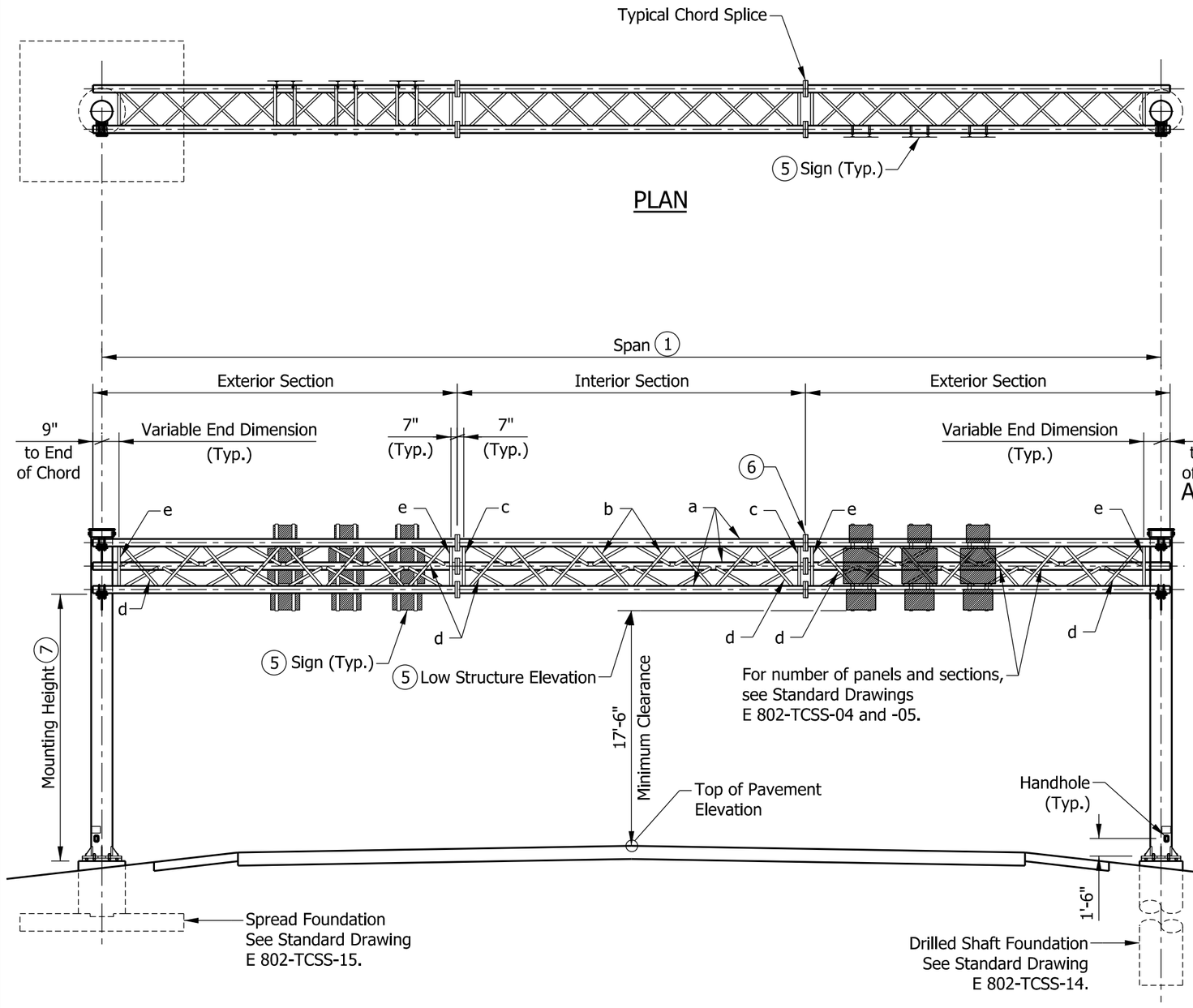

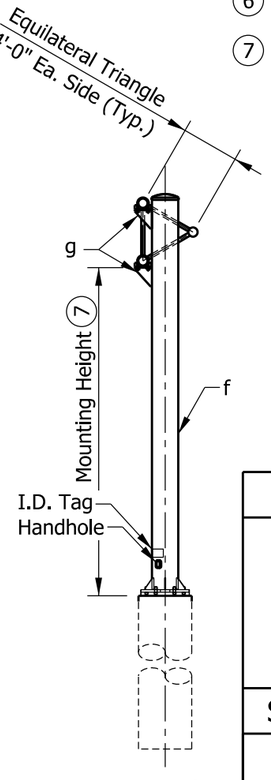

NOTES:

1. Tri-chord truss structures are for various maximum sign areas and span lengths. See Standard Drawings E 802-TCSS-04 through -06 for panel dimensions, member sizes, and camber.
2. Maximum deviation of any chord from a straight line in any section shall be less than 1/8". Maximum horizontal deviation over the entrie length of the tri-chord truss shall be less than 3/8" from a straight line.
3. See Standard Drawings E 802-TCSS-07 and -08 for connection and welding details.
4. See Standard Drawing E 802-TCSS-12 for base plate, anchor bolt, and I.D. tag details.
5. See Standard Drawing E 802-TCSS-11 for sign attachment details.
6. See Standard Drawing E 802-TCSS-09 for chord flange details.
7. Maximum mounting height is 23'-0".

LEGEND:

a - Chord
b - Interior Diagonal
c - Interior Section Vertical
d - End Diagonal
e - Exterior Section Vertical
f - Column
g - W-Beam Supports

INDIANA DEPARTMENT OF TRANSPORTATION

TRI-CHORD SIGN STRUCTURE PLAN AND ELEVATION

SEPTEMBER 2013

STANDARD DRAWING NO. E 802-TCSS-02

ALFREDO B. HANZA REGISTERED No. 60020657 STATE OF INDIANA PROFESSIONAL ENGINEER

/s/ Alfredo B. Hanza 02/22/13
DESIGN STANDARDS ENGINEER DATE

/s/ Mark A. Miller 03/27/13
CHIEF ENGINEER DATE

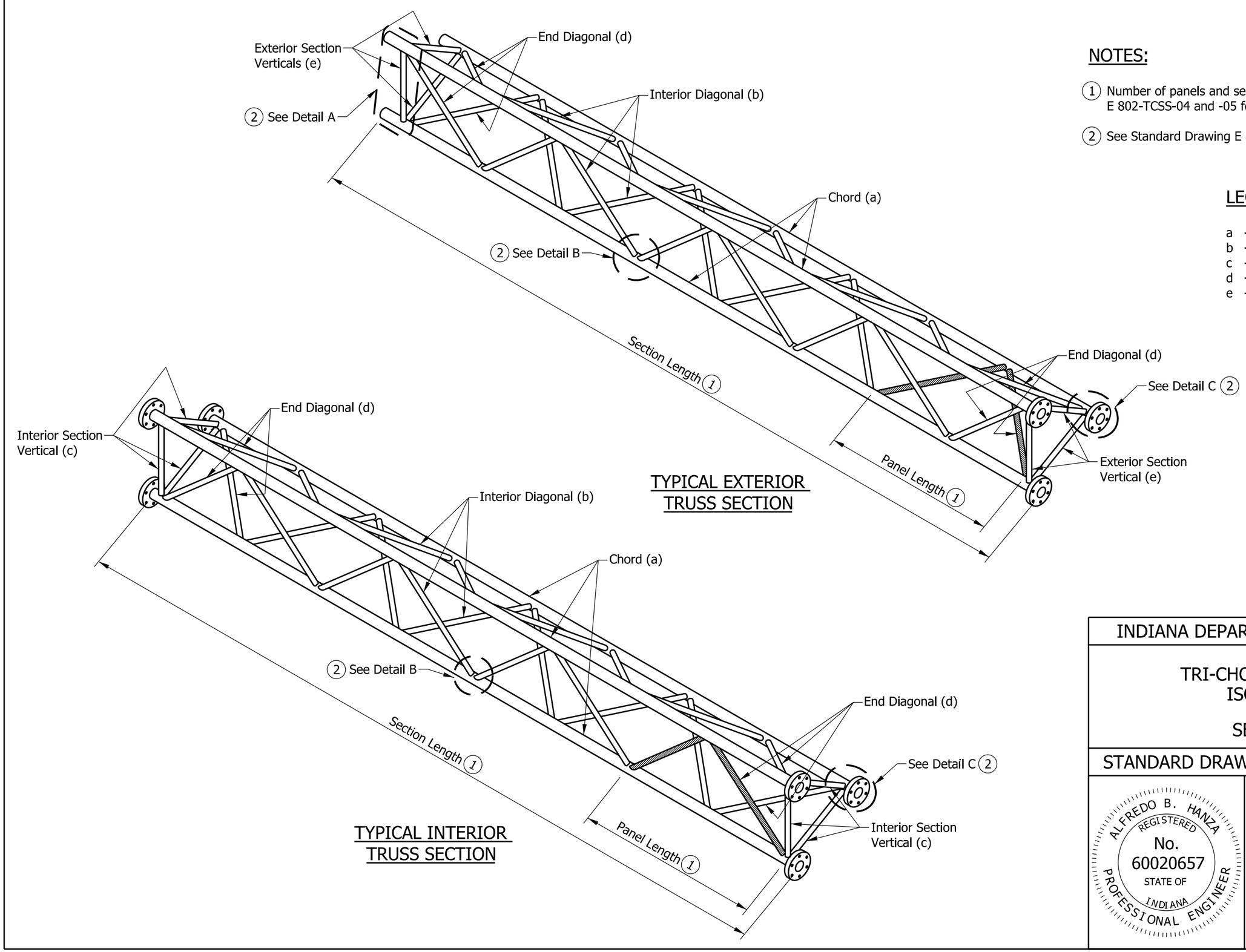

TYPICAL EXTERIOR TRUSS SECTION

TYPICAL INTERIOR TRUSS SECTION

NOTES:

1. Number of panels and sections varies. See Standard Drawings E 802-TCSS-04 and -05 for recommended dimensions.
2. See Standard Drawing E 802-TCSS-08 for Details A, B, and C.

LEGEND:

a - Chord
b - Interior Diagonal
c - Interior Section Vertical
d - End Diagonal
e - Exterior Section Vertical

INDIANA DEPARTMENT OF TRANSPORTATION

TRI-CHORD SIGN STRUCTURE ISOMETRIC VIEWS

SEPTEMBER 2013

STANDARD DRAWING NO. E 802-TCSS-03

ALFREDO B. HANZA REGISTERED No. 60020657 STATE OF INDIANA PROFESSIONAL ENGINEER

/s/ Alfredo B. Hanza 02/22/13
DESIGN STANDARDS ENGINEER DATE

/s/ Mark A. Miller 03/27/13
CHIEF ENGINEER DATE

RECOMMENDED PANEL DIMENSIONS FOR TRI-CHORD (36' THROUGH 83')

SPAN	EXTERIOR SECTIONS					INTERIOR SECTIONS			
SPAN-TRUSS LENGTH (FT)	NO. OF EXT. SEC.	NO. OF EXT. PANELS PER SEC.	VARIABLE END DIMENSION	PANEL LENGTH	SECTION LENGTH	NO. OF INT. SEC.	NO. OF INT. PANELS PER SEC.	PANEL LENGTH	SECTION LENGTH
36	2	5	1'-2"	3'-3"	18'-9"				
37	2	5	1'-3"	3'-4"	19'-3"				
38	2	5	1'-4"	3'-5"	19'-9"				
39	2	5	1'-5"	3'-6"	20'-3"				
40	2	5	1'-6"	3'-7"	20'-9"				
41	2	5	1'-7"	3'-8"	21'-3"				
42	2	6	1'-5"	3'-2"	21'-9"				
43	2	6	1'-5"	3'-3"	22'-3"				
44	2	6	1'-5"	3'-4"	22'-9"				
45	2	6	1'-5"	3'-5"	23'-3"				
46	2	7	1'-5"	3'-0"	23'-9"				
47	2	7	1'-4"	3'-1"	24'-3"				
48	2	7	1'-6 1/2"	3'-1 1/2"	24'-9"				
49	2	7	1'-5 1/2"	3'-2 1/2"	25'-3"				
50	2	7	1'-4 1/2"	3'-3 1/2"	25'-9"				
51	2	7	1'-7"	3'-4"	26'-3"				
52	2	7	1'-6"	3'-5"	26'-9"				
53	2	7	1'-5"	3'-6"	27'-3"				
54	2	7	1'-4"	3'-7"	27'-9"				
55	2	7	1'-6 1/2"	3'-7 1/2"	28'-3"				
56	2	7	1'-5 1/2"	3'-8 1/2"	28'-9"				
57	2	7	1'-4 1/2"	3'-9 1/2"	29'-3"				
58	2	7	1'-7"	3'-10"	29'-9"				
59	2	6	1'-4"	3'-0"	20'-8"	1	6	3'-0"	19'-2"
60	2	6	1'-5 1/2"	3'-1/2"	21'-1/2"	1	6	3'-1/2"	19'-5"
61	2	6	1'-7"	3'-1"	21'-5"	1	6	3'-1"	19'-8"
62	2	6	1'-8 1/2"	3'-1 1/2"	21'-9 1/2"	1	6	3'-1 1/2"	19'-11"
63	2	6	1'-10"	3'-2"	22'-2"	1	6	3'-2"	20'-2"
64	2	6	1'-7"	3'-3"	22'-5"	1	6	3'-3"	20'-8"
65	2	6	1'-8 1/2"	3'-3 1/2"	22'-9 1/2"	1	6	3'-3 1/2"	20'-11"
66	2	6	1'-10"	3'-4"	23'-2"	1	6	3'-4"	21'-2"
67	2	6	1'-7"	3'-5"	23'-5"	1	6	3'-5"	21'-8"
68	2	6	1'-8 1/2"	3'-5 1/2"	23'-9 1/2"	1	6	3'-5 1/2"	21'-11"
69	2	6	1'-10"	3'-6"	24'-2"	1	6	3'-6"	22'-2"
70	2	6	1'-9"	3'-2 1/2"	22'-4"	1	8	3'-2 1/2"	26'-10"
71	2	6	1'-5"	3'-3 1/2"	22'-6"	1	8	3'-3 1/2"	27'-6"
72	2	6	1'-6"	3'-4"	22'-10"	1	8	3'-4"	27'-10"
73	2	6	1'-7"	3'-4 1/2"	23'-2"	1	8	3'-4 1/2"	28'-2"
74	2	6	1'-8"	3'-5"	23'-6"	1	8	3'-5"	28'-6"
75	2	6	1'-4"	3'-6"	23'-8"	1	8	3'-6"	29'-2"
76	2	6	1'-5"	3'-6 1/2"	24'-0"	1	8	3'-6 1/2"	29'-6"
77	2	6	1'-6"	3'-7"	24'-4"	1	8	3'-7"	29'-10"
78	2	6	1'-7"	3'-7 1/2"	24'-8"	1	8	3'-7 1/2"	30'-2"
79	2	6	1'-8"	3'-8"	25'-0"	1	8	3'-8"	30'-6"
80	2	6	1'-4"	3'-9"	25'-2"	1	8	3'-9"	31'-2"
81	2	6	1'-5"	3'-9 1/2"	25'-6"	1	8	3'-9 1/2"	31'-6"
82	2	6	1'-6"	3'-10"	25'-10"	1	8	3'-10"	31'-10"
83	2	6	1'-7"	3'-10 1/2"	26'-2"	1	8	3'-10 1/2"	32'-2"

NOTES:

1. All panels on a truss shall be the same length. The minimum panel length is 3'-0" and the maximum is 4'-0".
2. A single interior unit shall have an even number of panels to maintain the pattern of the diagonals.
3. Use minimum number of sections for each truss. Keep the maximum section length at 35'-0".
4. See Standard Drawing E 802-TCSS-05 for required camber.

INDIANA DEPARTMENT OF TRANSPORTATION

TRI-CHORD SIGN STRUCTURE
PANEL DIMENSIONS
SPANS 36' THRU 83'

SEPTEMBER 2013

STANDARD DRAWING NO. E 802-TCSS-04

ALFREDO B. HANZA
REGISTERED
No. 60020657
STATE OF INDIANA
PROFESSIONAL ENGINEER

/s/ Alfredo B. Hanza 02/22/13
DESIGN STANDARDS ENGINEER DATE

/s/ Mark A. Miller 03/27/13
CHIEF ENGINEER DATE

RECOMMENDED PANEL DIMENSIONS FOR TRI-CHORD (84' THROUGH 130')

SPAN	EXTERIOR SECTIONS					INTERIOR SECTIONS			
SPAN-TRUSS LENGTH (FT)	NO. OF EXT. SEC.	NO. OF EXT. PANELS PER SEC.	VARIABLE END DIMENSION	PANEL LENGTH	SECTION LENGTH	NO. OF INT. SEC.	NO. OF INT. PANELS PER SEC.	PANEL LENGTH	SECTION LENGTH
84	2	6	1'-8"	3'-11"	26'-6"	1	8	3'-11"	32'-6"
85	2	6	1'-9"	3'-11 1/2"	26'-10"	1	8	3'-11 1/2"	32'-10"
86	2	6	1'-10"	4'-0"	27'-2"	1	8	4'-0"	33'-2"
87	2	7	1'-6 1/2"	3'-8 1/2"	28'-10"	1	8	3'-8 1/2"	33'-10"
88	2	7	1'-7"	3'-9"	29'-2"	1	8	3'-9"	31'-2"
89	2	7	1'-7 1/2"	3'-9 1/2"	29'-6"	1	8	3'-9 1/2"	31'-6"
90	2	7	1'-8"	3'-10"	29'-10"	1	8	3'-10"	31'-10"
91	2	7	1'-8 1/2"	3'-10 1/2"	30'-2"	1	8	3'-10 1/2"	32'-2"
92	2	8	1'-8"	3'-8"	32'-4"	1	8	3'-5 1/2"	28'-10"
93	2	8	1'-8"	3'-8 1/2"	32'-8"	1	8	3'-6"	29'-2"
94	2	8	1'-8"	3'-9"	33'-0"	1	8	3'-6 1/2"	29'-6"
95	2	8	1'-8"	3'-9 1/2"	33'-4"	1	8	3'-7"	29'-10"
96	2	8	1'-8"	3'-10"	33'-8"	1	8	3'-7 1/2"	30'-2"
97	2	8	1'-8"	3'-10 1/2"	34'-0"	1	8	3'-8"	30'-6"
98	2	8	1'-8"	3'-11"	34'-4"	1	8	3'-8 1/2"	30'-10"
99	2	8	1'-8"	3'-11 1/2"	34'-8"	1	8	3'-9"	31'-2"
100	2	8	1'-8"	4'-0"	35'-0"	1	8	3'-9 1/2"	31'-6"
101	2	8	1'-10 1/2"	3'-1 1/2"	28'-2 1/2"	1	7	3'-1 1/2"	23'-1/2"
102	2	8	1'-9"	3'-2"	28'-5"	1	7	3'-2"	23'-4"
103	2	8	1'-7 1/2"	3'-2 1/2"	28'-7 1/2"	1	7	3'-2 1/2"	23'-7 1/2"
104	2	8	1'-6"	3'-3"	28'-10"	1	7	3'-3"	23'-11"
105	2	8	1'-4 1/2"	3'-3 1/2"	29'-0 1/2"	1	7	3'-3 1/2"	24'-2 1/2"
106	2	8	1'-10 1/2"	3'-3 1/2"	29'-6 1/2"	1	7	3'-3 1/2"	24'-2 1/2"
107	2	8	1'-9"	3'-3 1/2"	29'-9"	1	7	3'-4"	24'-6"
108	2	8	1'-7 1/2"	3'-4 1/2"	29'-11 1/2"	1	7	3'-4 1/2"	24'-9 1/2"
109	2	8	1'-6"	3'-5"	30'-2"	1	7	3'-5"	25'-1"
110	2	8	1'-8 1/4"	3'-5 1/4"	30'-6 1/4"	1	7	3'-5 1/4"	25'-2 3/4"
111	2	8	1'-10 1/2"	3'-5 1/2"	30'-5 1/4"	1	7	3'-5 1/2"	25'-4 1/2"
112	2	8	1'-9"	3'-6"	31'-1"	1	7	3'-6"	25'-8"
113	2	8	1'-7 1/2"	3'-6 1/2"	31'-3 1/2"	1	7	3'-6 1/2"	25'-11 1/2"
114	2	8	1'-6"	3'-7"	31'-6"	1	7	3'-7"	26'-3"
115	2	8	1'-8 1/4"	3'-7 1/4"	31'-10 1/4"	1	7	3'-7 1/4"	26'-4 3/4"
116	2	8	1'-10 1/2"	3'-7 1/2"	32'-2 1/2"	1	7	3'-7 1/2"	26'-6 1/2"
117	2	8	1'-9"	3'-8"	32'-5"	1	7	3'-8"	26'-10"
118	2	8	1'-7 1/2"	3'-8 1/2"	32'-7 1/2"	1	7	3'-8 1/2"	27'-1 1/2"
119	2	8	1'-6"	3'-9"	32'-10"	1	7	3'-9"	27'-5"
120	2	8	1'-8 1/4"	3'-9 1/4"	33'-2 1/4"	1	7	3'-9 1/4"	27'-6 3/4"
121	2	8	1'-10 1/2"	3'-9 1/2"	33'-6 1/2"	1	7	3'-9 1/2"	27'-8 1/2"
122	2	8	1'-9"	3'-10"	33'-9"	1	7	3'-10"	28'-0"
123	2	8	1'-9"	3'-5 1/2"	30'-9"	1	8	3'-9 1/2"	31'-6"
124	2	8	1'-11"	3'-5 1/2"	30'-11"	1	8	3'-10"	31'-10"
125	2	8	1'-9"	3'-6"	31'-1"	1	8	3'-10 1/2"	32'-2"
126	2	8	1'-7"	3'-6 1/2"	31'-3"	1	8	3'-11"	32'-6"
127	2	8	1'-9"	3'-7"	31'-9"	1	8	3'-11"	32'-6"
128	2	8	1'-11"	3'-7 1/2"	32'-3"	1	8	3'-11"	32'-6"
129	2	8	1'-9"	3'-8"	32'-5"	1	8	3'-11 1/2"	32'-10"
130	2	8	1'-7"	3'-8 1/2"	32'-7"	1	8	4'-0"	33'-2"

NOTES:

1. All panels on a truss shall be the same length. The minimum panel length is 3'-0" and the maximum is 4'-0".
2. A single interior unit shall have an even number of panels to maintain the pattern of the diagonals.
3. Use minimum number of sections for each truss. Keep the maximum section length at 35'-0".
4. See Standard Drawing E 802-TCSS-05 for required camber.

INDIANA DEPARTMENT OF TRANSPORTATION

TRI-CHORD SIGN STRUCTURE
PANEL DIMENSIONS
SPANS 84' THRU 130'
SEPTEMBER 2013

STANDARD DRAWING NO. E 802-TCSS-05

ALFREDO B. HANZA
REGISTERED
No. 60020657
STATE OF INDIANA
PROFESSIONAL ENGINEER

/s/ Alfredo B. Hanza 02/22/13
DESIGN STANDARDS ENGINEER DATE

/s/ Mark A. Miller 03/27/13
CHIEF ENGINEER DATE

TRI-CHORD SIGN STRUCTURE MEMBER SIZES

TRUSS TYPE	MAX SIGN AREA (SQ FT)	MAX MOUNTING HEIGHT, H	MAX SPAN (FT)	TRUSS MEMBERS										END SUPPORT MEMBERS		
				CHORD a		INT. DIAGONALS b		INT. SECTION VERT. c		END DIAGONALS d		EXT. SECTION VERT. e		COLUMN f		W-BEAM g
				DIAM. (IN.)	THICK (IN.)	DIAM. (IN.)	THICK (IN.)	DIAM. (IN.)	THICK (IN.)	DIAM. (IN.)	THICK (IN.)	DIAM. (IN.)	THICK (IN.)	DIAM. (IN.)	THICK (IN.)	
A	120	23'-0"	80	5.563	0.375	1.900	0.145	1.900	0.200	2.875	0.276	1.900	0.145	18.000	0.562	W 12 x 35
B			100	5.563	0.375	2.375	0.218	1.900	0.200	2.875	0.375	2.375	0.218	18.000	0.562	W 12 x 35
C			130	5.563	0.500	2.375	0.218	1.900	0.200	2.875	0.375	2.375	0.218	20.000	0.500	W 12 x 58
D	240	23'-0"	80	5.563	0.625	2.375	0.343	1.900	0.200	2.875	0.552	2.375	0.343	18.000	0.750	W 12 x 35
E			100	5.563	0.625	2.375	0.343	1.900	0.200	2.875	0.552	2.375	0.343	20.000	0.812	W 12 x 35
F			130	6.625	0.562	2.375	0.343	1.900	0.200	3.500	0.437	2.375	0.343	22.000	0.875	W 12 x 58

LEGEND:

a - Chord
b - Interior Diagonal
c - Interior Section Vertical
d - End Diagonal
e - Exterior Section Vertical
f - Column
g - W-Beam Support

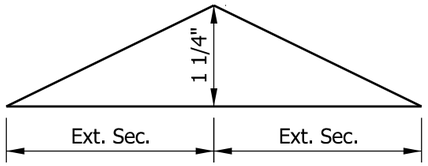

CAMBER DIAGRAM (2-Section Truss)

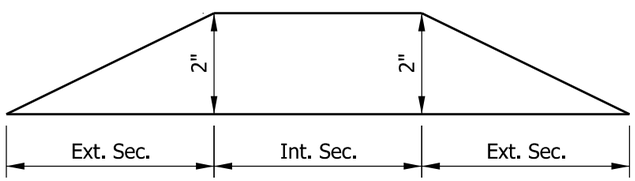

CAMBER DIAGRAM (3-Section Truss)

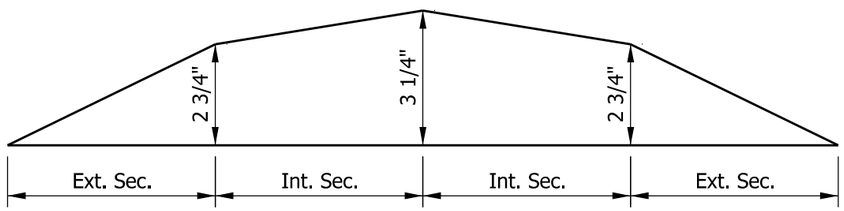

CAMBER DIAGRAM (4-Section Truss)

INDIANA DEPARTMENT OF TRANSPORTATION

TRI-CHORD SIGN STRUCTURE
MEMBER SIZES AND CAMBER

SEPTEMBER 2013

STANDARD DRAWING NO. E 802-TCSS-06

ALFREDO B. HANZA
REGISTERED
No. 60020657
STATE OF INDIANA
PROFESSIONAL ENGINEER

/s/ Alfredo B. Hanza 02/22/13
DESIGN STANDARDS ENGINEER DATE

/s/ Mark A. Miller 03/27/13
CHIEF ENGINEER DATE

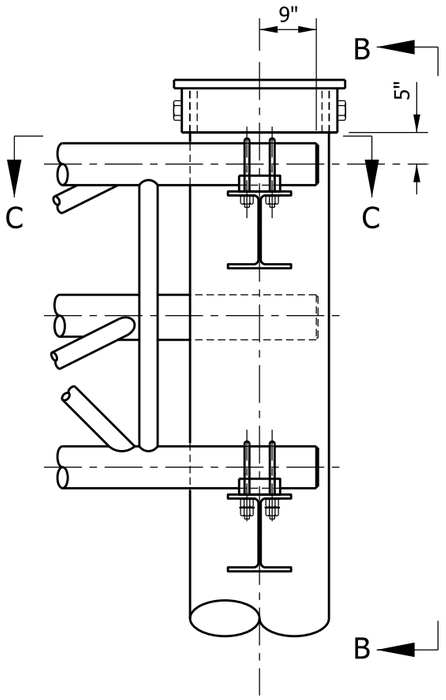

TRUSS SEAT DETAIL

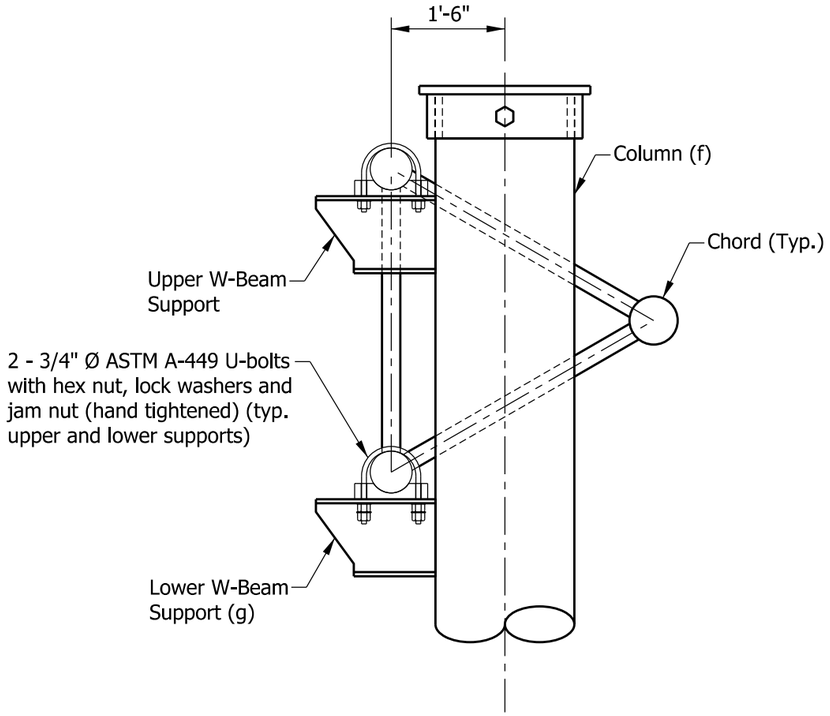

VIEW B-B

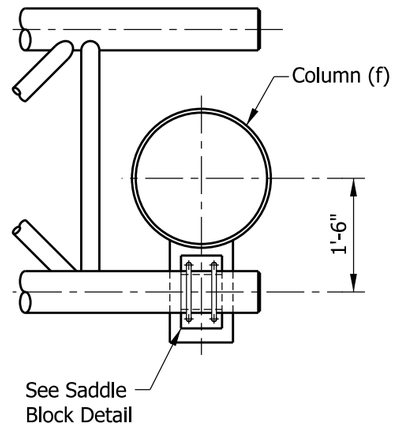

VIEW C-C

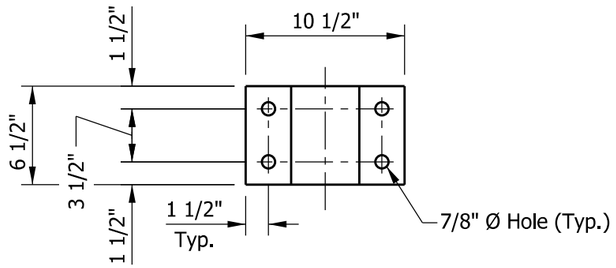

PLAN

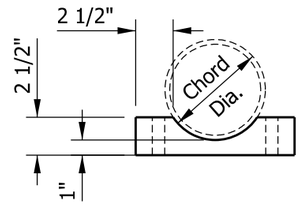

SADDLE BLOCK DETAIL

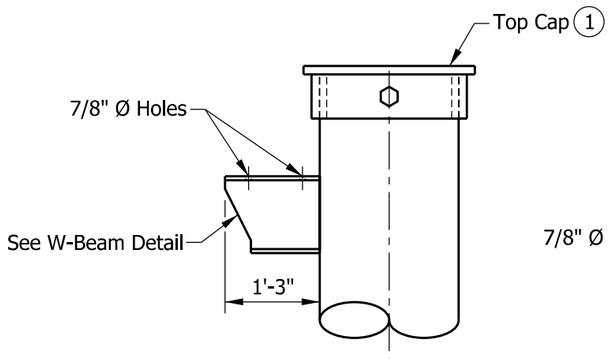

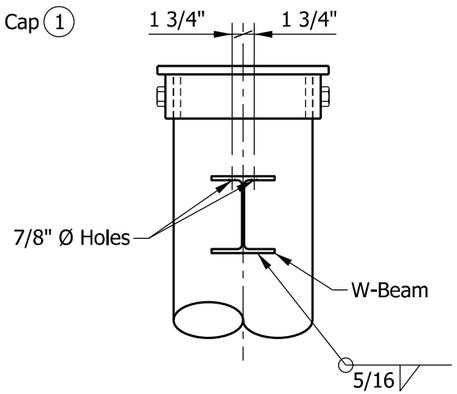

TRUSS SEAT DETAIL

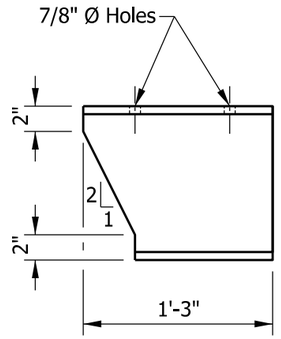

W-BEAM DETAIL

NOTE: Upper and lower W-beam details are the same.

NOTE:

(1) See Standard Drawing E 802-TCSS-10 for top cap detail.

INDIANA DEPARTMENT OF TRANSPORTATION

TRI-CHORD SIGN STRUCTURE CONNECTION DETAILS

SEPTEMBER 2013

STANDARD DRAWING NO. E 802-TCSS-07

ALFREDO B. HANZA REGISTERED No. 60020657 STATE OF INDIANA PROFESSIONAL ENGINEER

/s/ Alfredo B. Hanza 02/22/13
DESIGN STANDARDS ENGINEER DATE

/s/ Mark A. Miller 03/27/13
CHIEF ENGINEER DATE

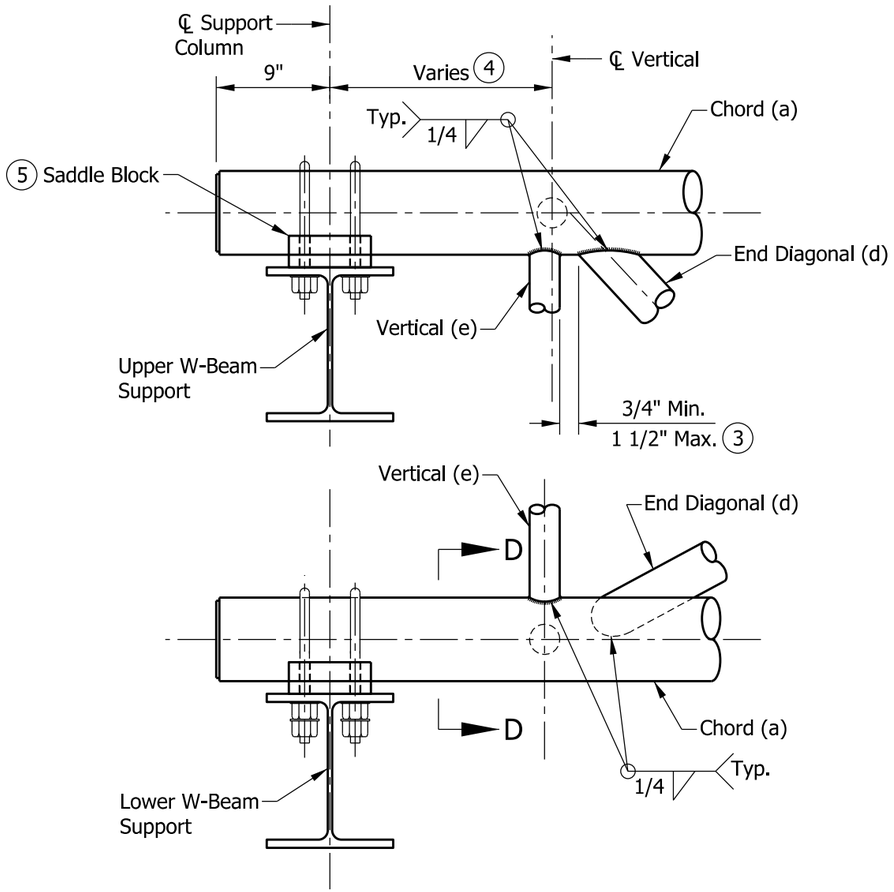

DETAIL A
SUPPORT END DETAIL FOR EXTERIOR SECTION

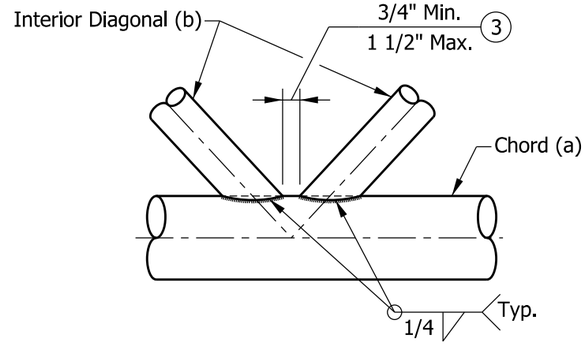

DETAIL B
TYPICAL PANEL CONNECTION

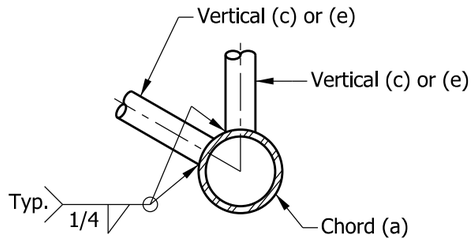

SECTION D-D
TYPICAL JOINT DETAILS

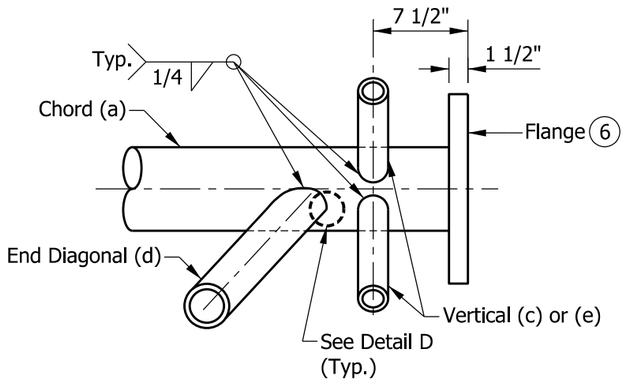

DETAIL C
TYPICAL PANEL CONNECTION

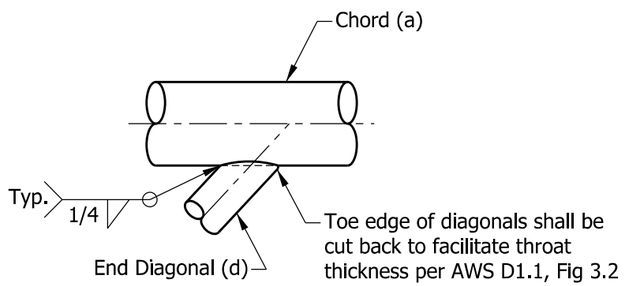

DETAIL D

NOTES:

1. All bracing members shall be machined to provide a snug fit to the chord members along the entire edge of bracing members before welding.
2. See Standard Drawing E 802-TCSS-03 for member location and see Standard Drawing E 802-TCSS-06 for member sizes.

(3) Vertical and horizontal diagonals shall be detailed for minimum offset from the panel point based on the following: offset shall provide a 3/4" minimum to 1 1/2" maximum clearance between any diagonal and any horizontal or vertical member, and to provide clearance for U-bolt connections of signs.

(4) Variable end dimension. See Standard Drawings E 802-TCSS-04 and -05 for table of recommended dimensions.

(5) See Standard Drawing E 802-TCSS-07 for saddle block details.

(6) See Standard Drawing E 802-TCSS-09 for chord flange details.

INDIANA DEPARTMENT OF TRANSPORTATION

TRI-CHORD SIGN STRUCTURE
CONNECTION AND WELDING DETAILS

SEPTEMBER 2013

STANDARD DRAWING NO. E 802-TCSS-08

ALFREDO B. HANZA
REGISTERED
No. 60020657
STATE OF INDIANA
PROFESSIONAL ENGINEER

/s/ Alfredo B. Hanza 03/26/13
DESIGN STANDARDS ENGINEER DATE

/s/ Mark A. Miller 03/27/13
CHIEF ENGINEER DATE

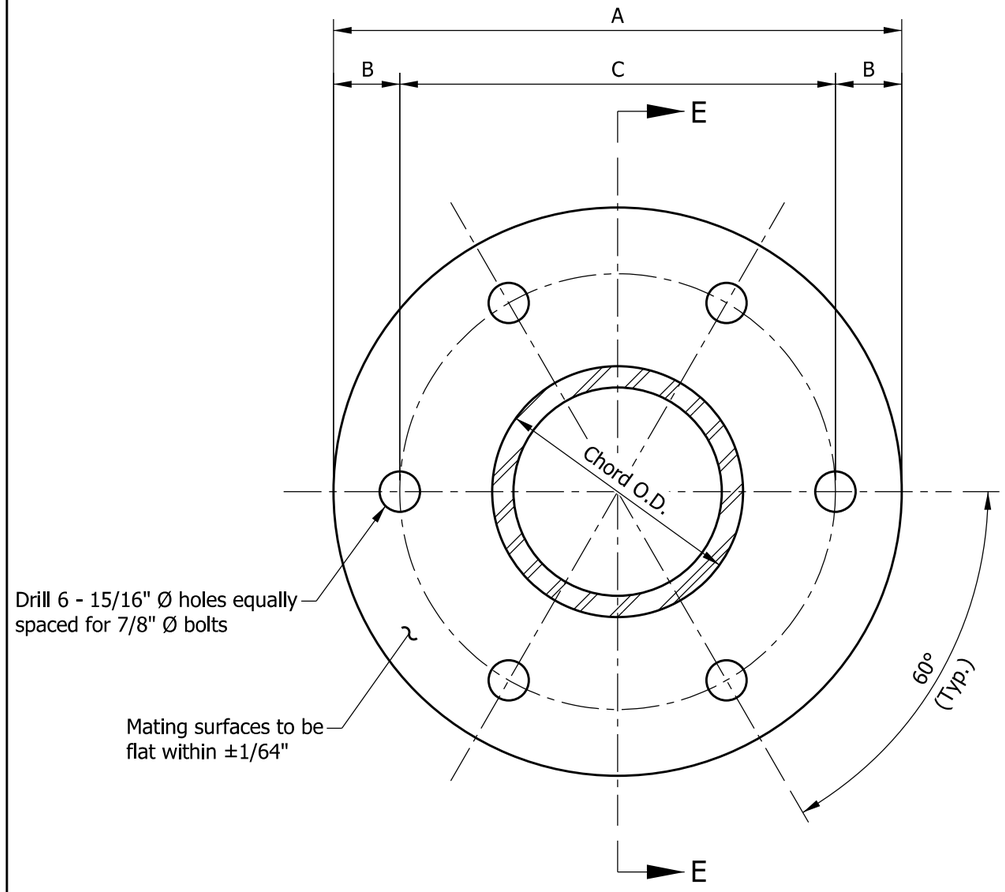

FLANGE DETAIL

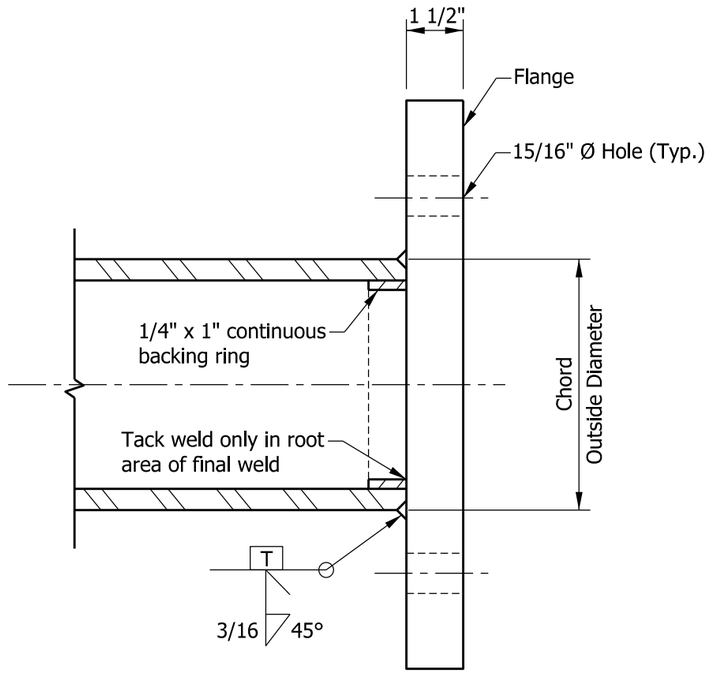

SECTION E-E

NOTES:

1. Mating surfaces to be flat within ±1/64". Flange shall be given additional finish if necessary to ensure contact between plates.
2. Use Type I ASTM A325 bolts with matching lock nuts. Lock nuts shall have steel inserts.
3. Bolts and lock nuts shall be hot dip galvanized in accordance with AASHTO M 232.
4. Install high strength bolts in accordance with 711.65.

DIMENSION TABLE				
TRUSS CHORD O.D.	BOLT SIZE	A	B	C
6.625"	7/8"	14"	2"	10"
5.625"	7/8"	13"	2"	9"

INDIANA DEPARTMENT OF TRANSPORTATION

TRI-CHORD SIGN STRUCTURE
CHORD FLANGE DETAILS

SEPTEMBER 2013

STANDARD DRAWING NO. E 802-TCSS-09

ALFREDO B. HANZA
REGISTERED
No. 60020657
STATE OF INDIANA
PROFESSIONAL ENGINEER

/s/ Alfredo B. Hanza 03/26/13
DESIGN STANDARDS ENGINEER DATE

/s/ Mark A. Miller 03/27/13
CHIEF ENGINEER DATE

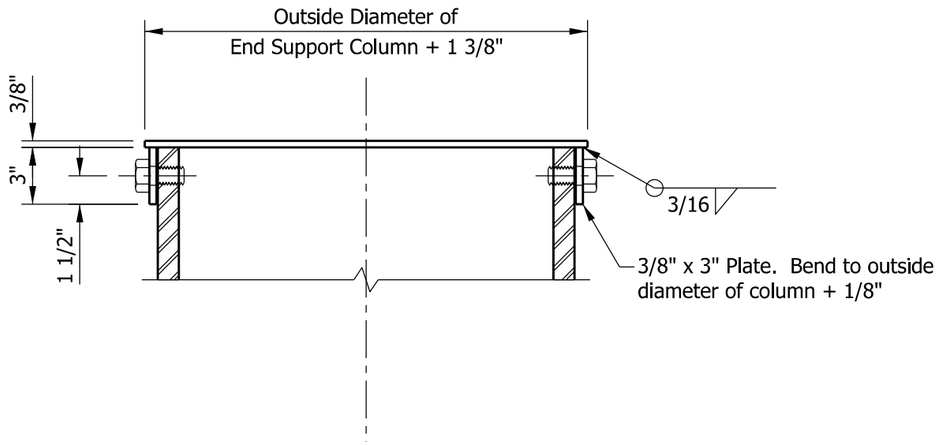

SECTION F-F

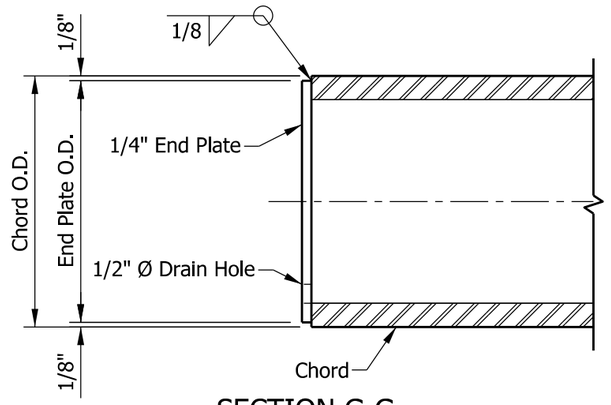

SECTION G-G

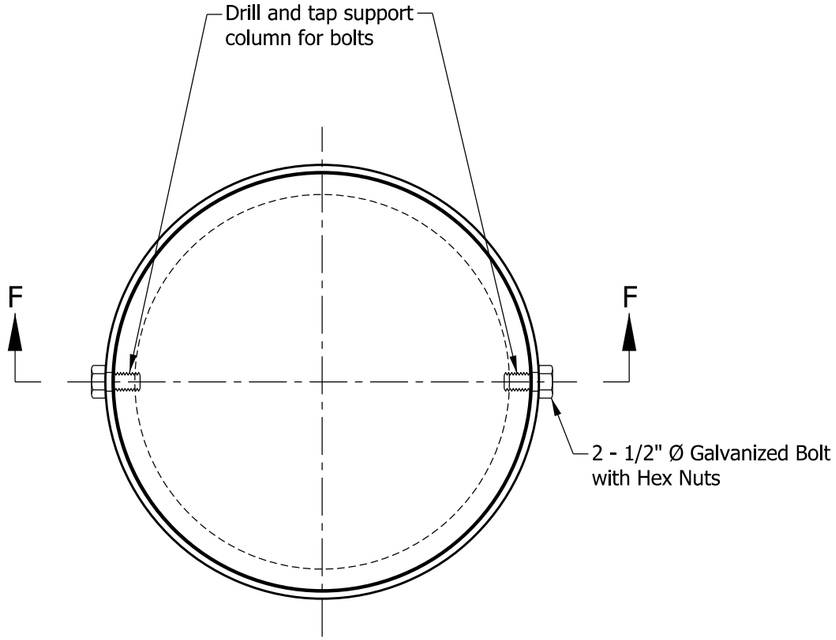

PLAN

COLUMN TOP CAP DETAIL

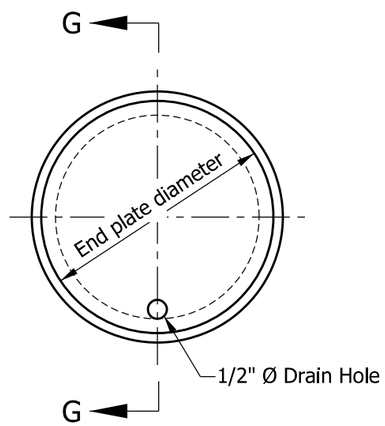

END VIEW

CHORD END PLATE DETAIL

INDIANA DEPARTMENT OF TRANSPORTATION

TRI-CHORD SIGN STRUCTURE
TOP CAP AND CHORD END PLATE DETAILS

SEPTEMBER 2013

STANDARD DRAWING NO. E 802-TCSS-10

ALFREDO B. HANZA
REGISTERED
No.
60020657
STATE OF
INDIANA
PROFESSIONAL ENGINEER

/s/ Alfredo B. Hanza 02/22/13
DESIGN STANDARDS ENGINEER DATE

/s/ Mark A. Miller 03/27/13
CHIEF ENGINEER DATE

NOTES:

1. Dimension A to be determined by Contractor to fit required signs.
2. A minimum of two truss chord attachment points to be used for each bracket.
3. The chords shall be at the vertices of an equilateral triangle having sides of length 4'-0".

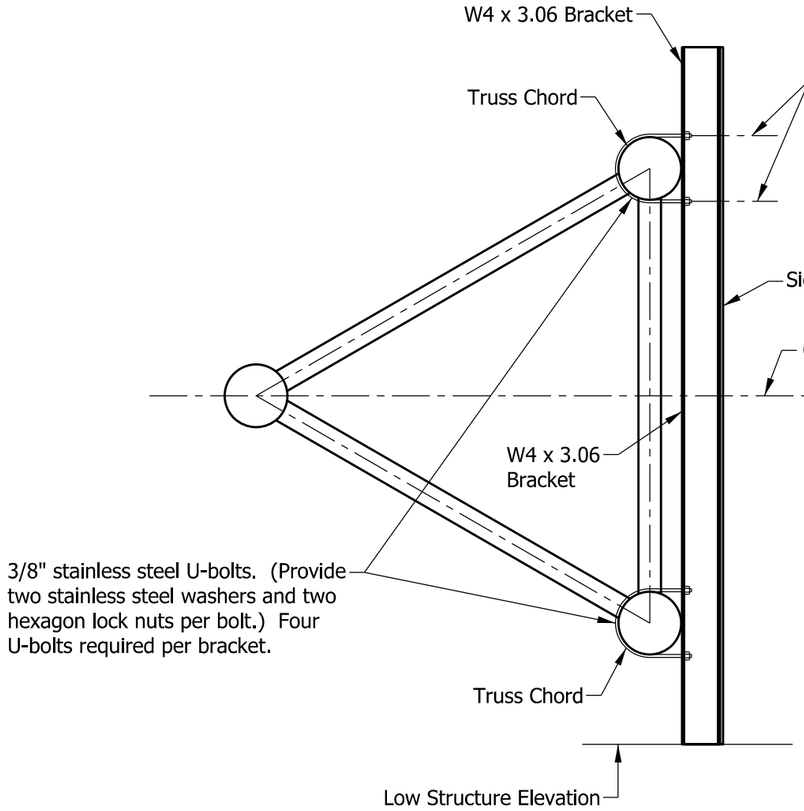

FRONT SIGN MOUNTING DETAIL

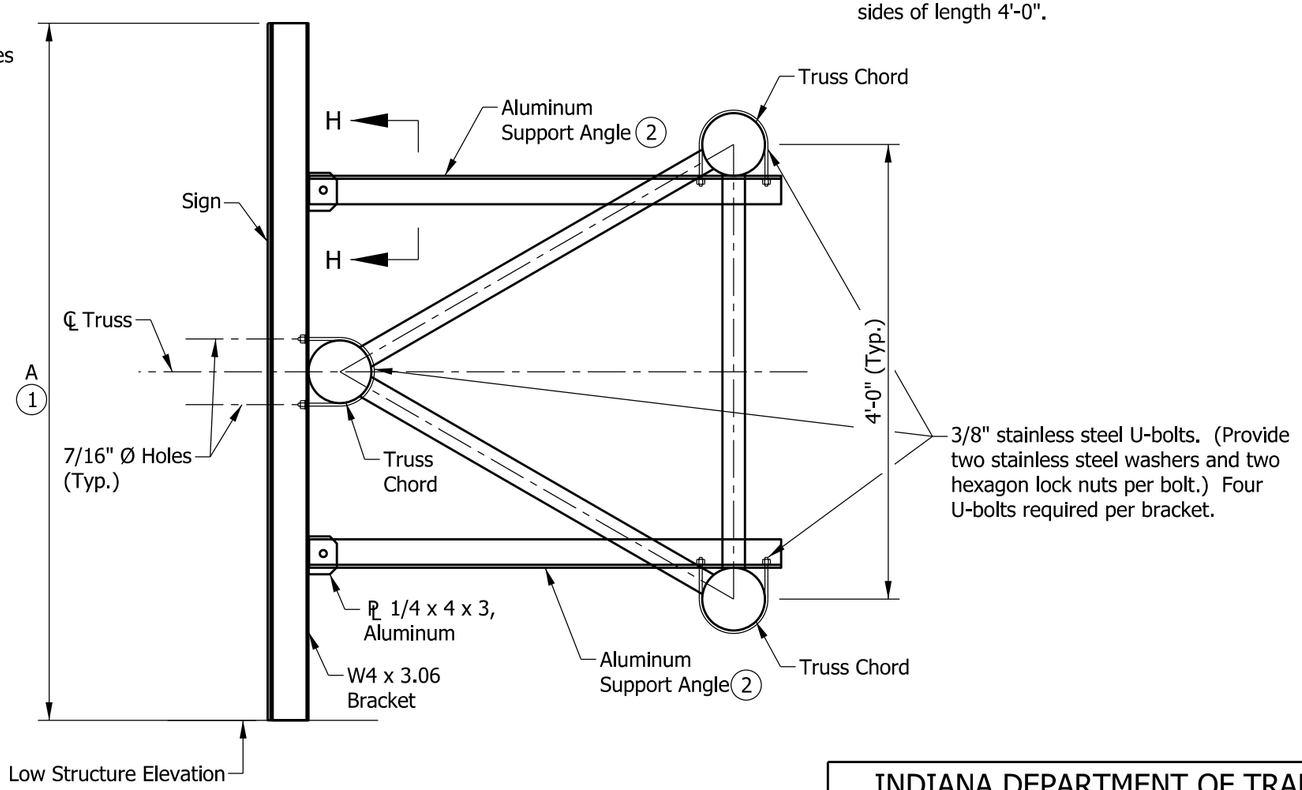

REAR SIGN MOUNTING DETAIL

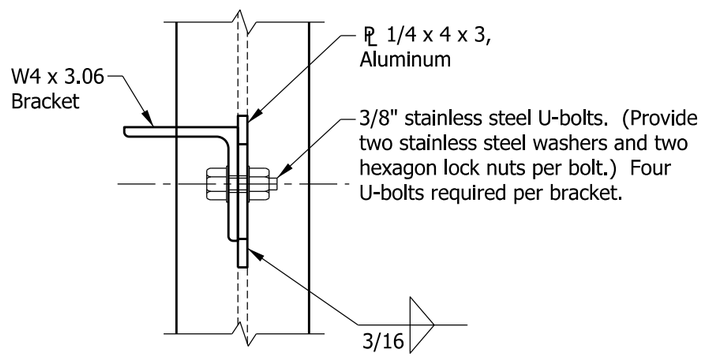

VIEW H-H

INDIANA DEPARTMENT OF TRANSPORTATION

TRI-CHORD SIGN STRUCTURE
SIGN ATTACHMENT DETAILS

SEPTEMBER 2013

STANDARD DRAWING NO. E 802-TCSS-11

ALFREDO B. HANZA
REGISTERED
No. 60020657
STATE OF INDIANA
PROFESSIONAL ENGINEER

/s/ Alfredo B. Hanza 02/22/13
DESIGN STANDARDS ENGINEER DATE

/s/ Mark A. Miller 03/27/13
CHIEF ENGINEER DATE

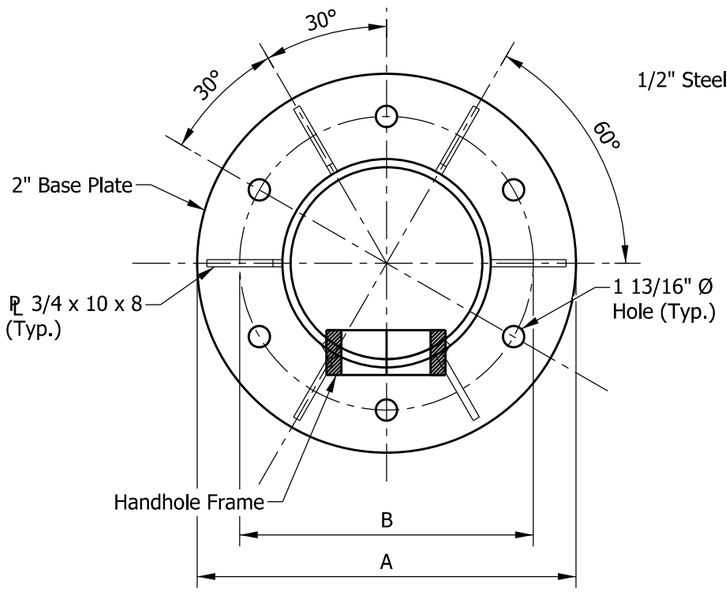

COLUMN BASE PLAN VIEW

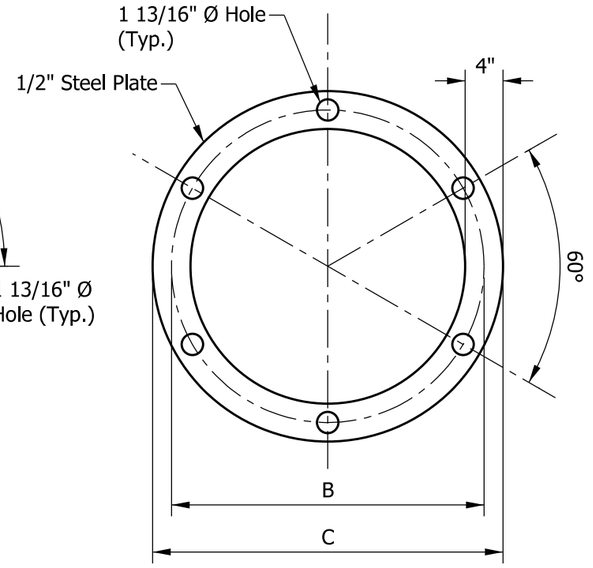

ANCHOR AND POSITIONING PLATE (1)

BASE PLATE DIMENSIONS			
COLUMN DIAMETER	A	B	C
18"	3'-0"	2'-3"	2'-7"
20"	3'-2"	2'-5"	2'-9"
22"	3'-4"	2'-7"	2'-11"

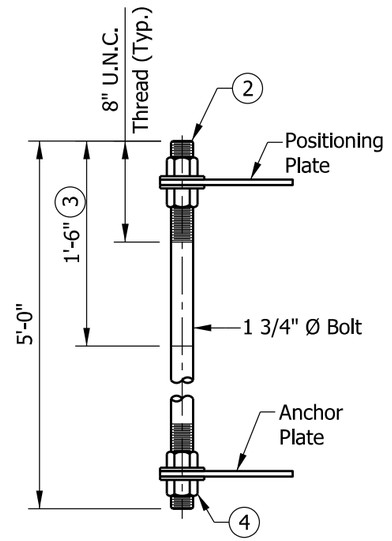

ANCHOR BOLT DETAIL

NOTES:

1. Utilize temporary positioning plate and leveling nuts or other Engineer-approved methods to maintain anchor bolt alignment during concrete placement. Positioning plate and associated nuts shall be removed upon completion of the foundation.
2. Protect threads during concreting with tape, sleeves, or other means.
3. 1'-6" is minimum to be galvanized. Entire bolt may be galvanized at Contractor's option.
4. Provide uncoated nut at bottom of anchor plate. Deform thread or use chemical thread lock to secure.
5. Use 1/4" x 1" minimum continuous backer ring. Tack weld only in root area of final weld. See Detail G this page for base plate weld detail.
6. Anchor bolt nuts shall be tightened against the base plate by turning the nut 1/6 turn (minimum) from snug tight condition.
7. See Standard Drawing E 802-TCSS-06 for column wall thickness.
8. I.D. tag is a 1/8" stainless steel plate with the following information stamped in 1/2" black letters:

   Manufacturer _____, Drawing/Order #_____
   Contract #_____, Structure Type _____
   Fabrication Date _____, Structure Length _____
   Column Mounting Height _____

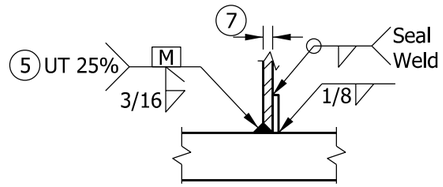

DETAIL G
BASE PLATE WELD

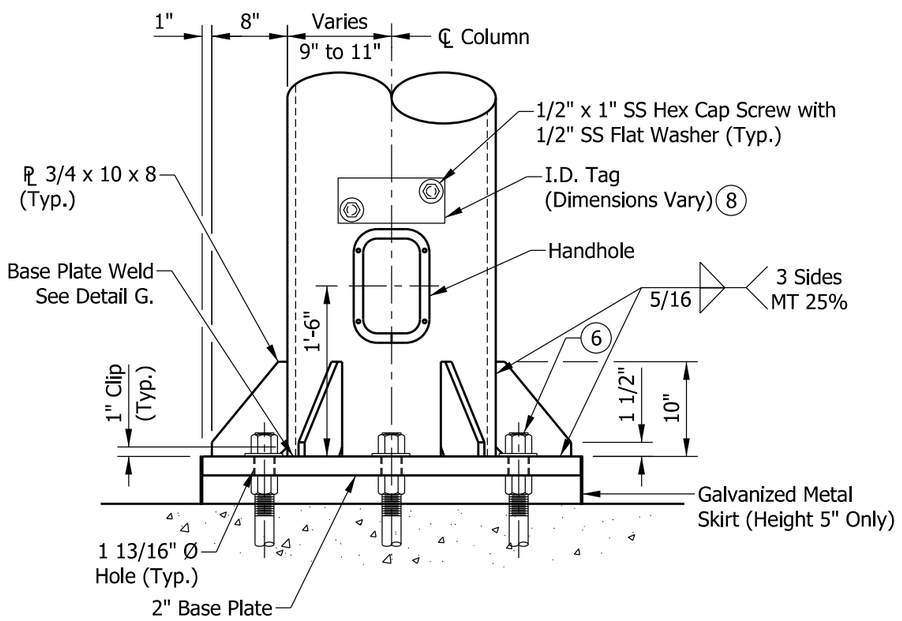

ELEVATION

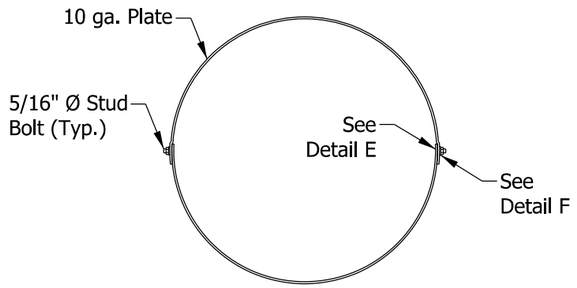

SKIRT DETAIL

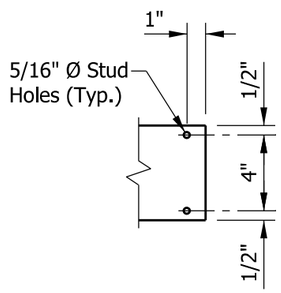

DETAIL E

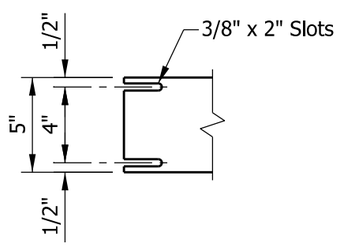

DETAIL F

INDIANA DEPARTMENT OF TRANSPORTATION

TRI-CHORD SIGN STRUCTURE
BASE PLATE, ANCHOR BOLT,
AND I.D. TAG DETAILS
SEPTEMBER 2013

STANDARD DRAWING NO. E 802-TCSS-12

ALFREDO B. HANZA
REGISTERED
No. 60020657
STATE OF INDIANA
PROFESSIONAL ENGINEER

/s/ Alfredo B. Hanza 03/26/13
DESIGN STANDARDS ENGINEER DATE

/s/ Mark A. Miller 03/27/13
CHIEF ENGINEER DATE

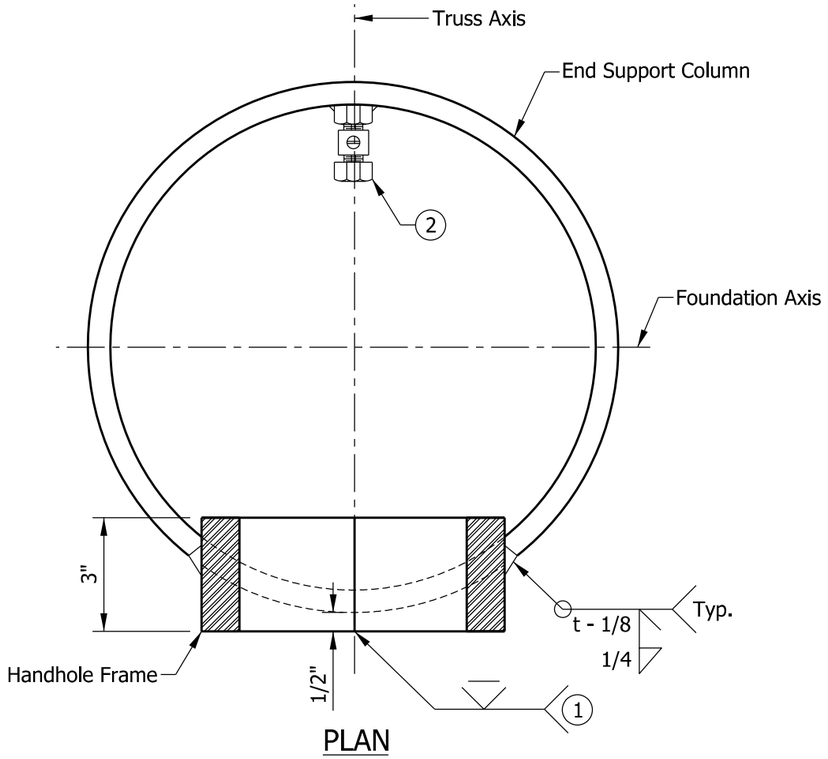

PLAN

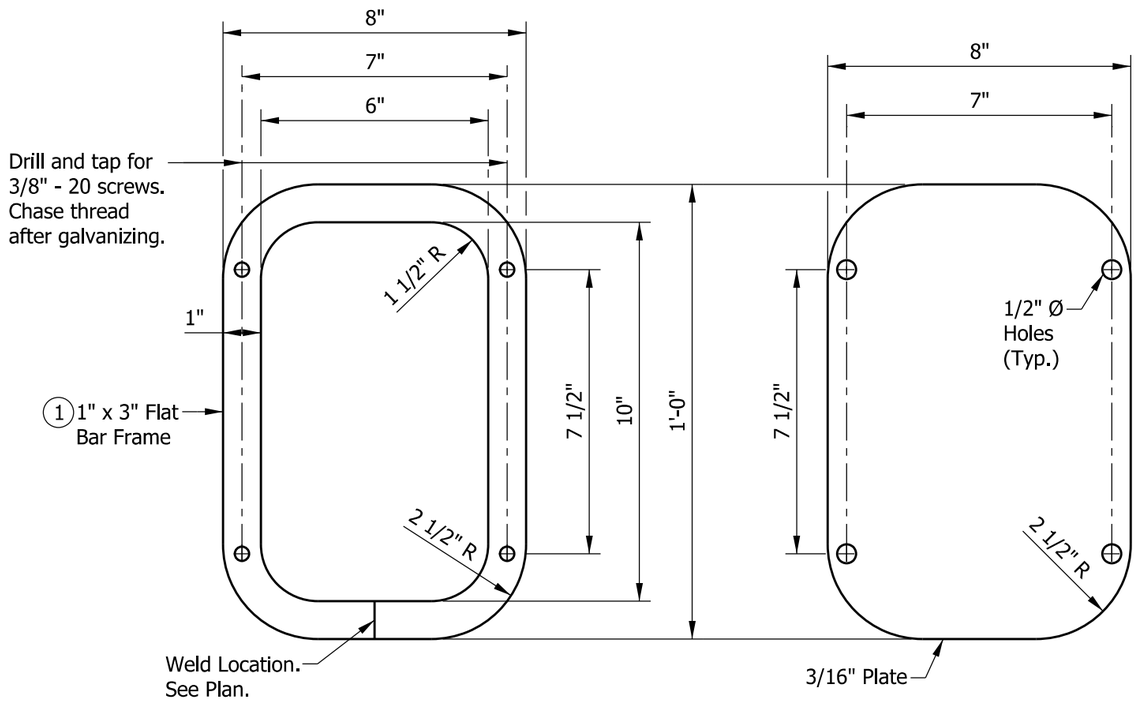

HANDHOLE FRAME DETAIL

HANDHOLE COVER

NOTES:

1. In lieu of fabricated handhole frame as shown, frame may be cut from 3" plate (rolling direction vertical).
2. Grounding clamp to be placed on far side of support directly opposite center of handhole.
3. See Standard Drawing E 802-TCSS-12 for handhole locations.

INDIANA DEPARTMENT OF TRANSPORTATION

TRI-CHORD SIGN STRUCTURE
HANDHOLE DETAILS

SEPTEMBER 2013

STANDARD DRAWING NO. E 802-TCSS-13

ALFREDO B. HANZA
REGISTERED
No.
60020657
STATE OF
INDIANA
PROFESSIONAL ENGINEER

/s/ Alfredo B. Hanza 02/22/13
DESIGN STANDARDS ENGINEER DATE

/s/ Mark A. Miller 03/27/13
CHIEF ENGINEER DATE

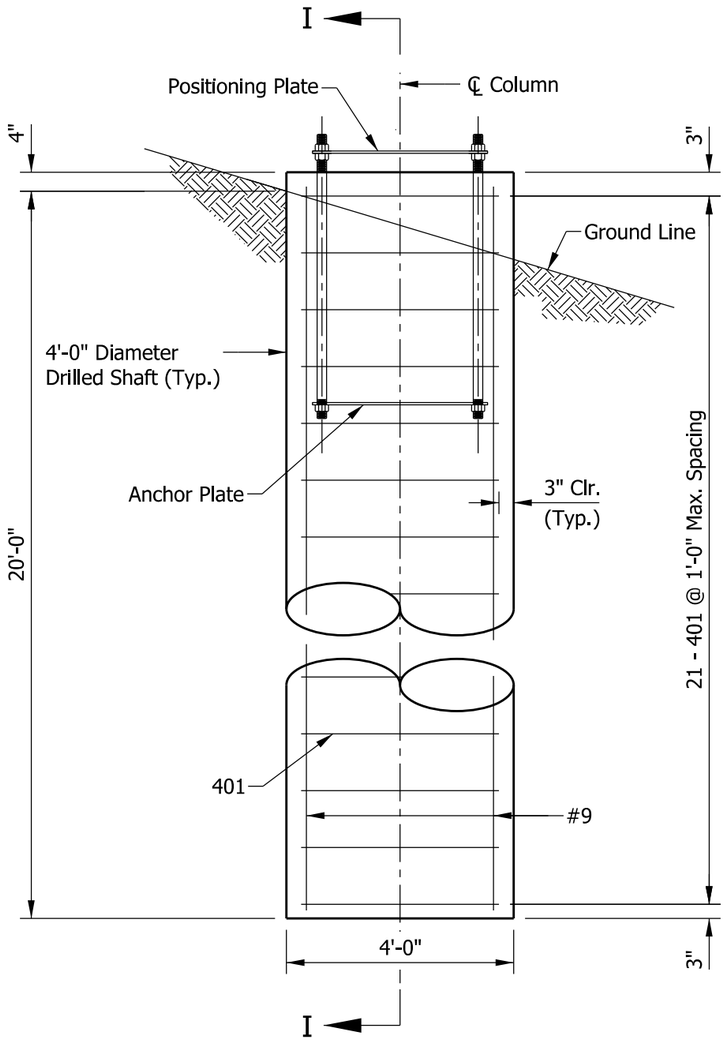

ELEVATION

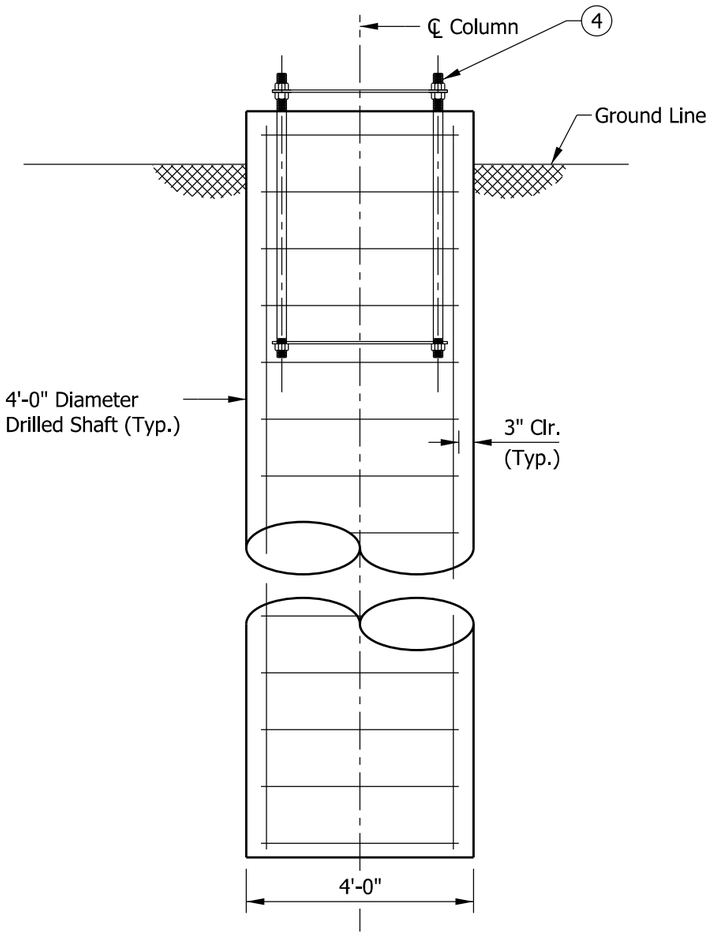

SECTION I-I

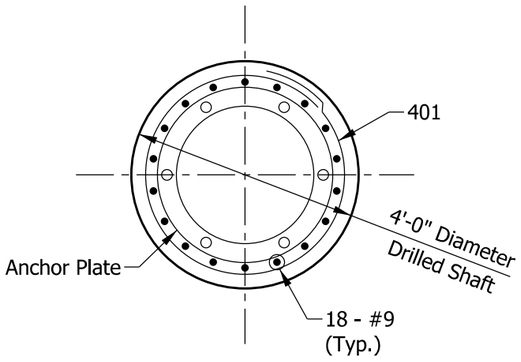

PLAN

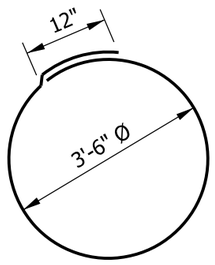

401 X 12'-0"

NOTES:

1. This standard foundation design is applicable for all tri-chord sign structures.
2. The design is based on clay soil with minimum unconfined shear strength of 750 psf or sandy soil with minimum friction angle of 30°.
3. All reinforcing bars to be epoxy coated.

(4) See Standard Drawing E 802-TCSS-12 for anchor bolts.

BILL OF MATERIALS			
EPOXY-COATED REINFORCING BARS			
MARK OR SIZE	NO. OF BARS	LENGTH	WEIGHT
901	18	20'-0"	
Total #9			1224 LBS
#4	21	12'-0"	
Total #4			168 LBS
Total Epoxy-Coated Reinforcing Bars			1392 LBS
MISCELLANEOUS			
Concrete, Class A			9.5 CYS
Surface Seal			0.5 SYS

INDIANA DEPARTMENT OF TRANSPORTATION

TRI-CHORD SIGN STRUCTURE DRILLED SHAFT FOUNDATION

SEPTEMBER 2013

STANDARD DRAWING NO. E 802-TCSS-14

ALFREDO B. HANZA REGISTERED No. 60020657 STATE OF INDIANA PROFESSIONAL ENGINEER

/s/ Alfredo B. Hanza 02/22/13
DESIGN STANDARDS ENGINEER DATE

/s/ Mark A. Miller 03/27/13
CHIEF ENGINEER DATE

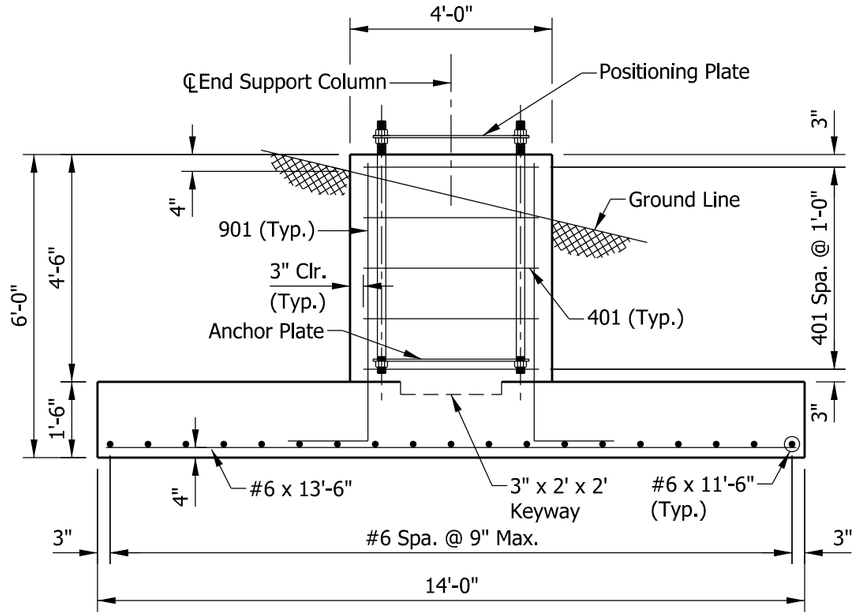

SECTION J-J

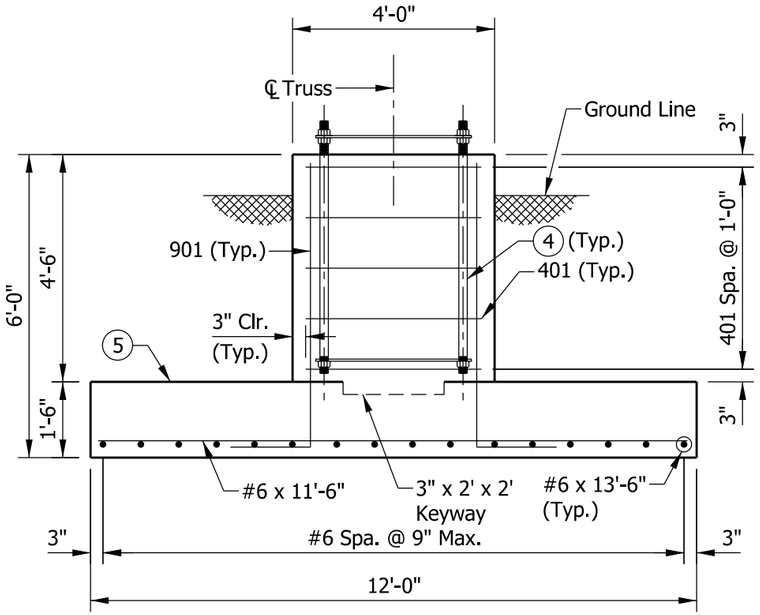

SECTION K-K

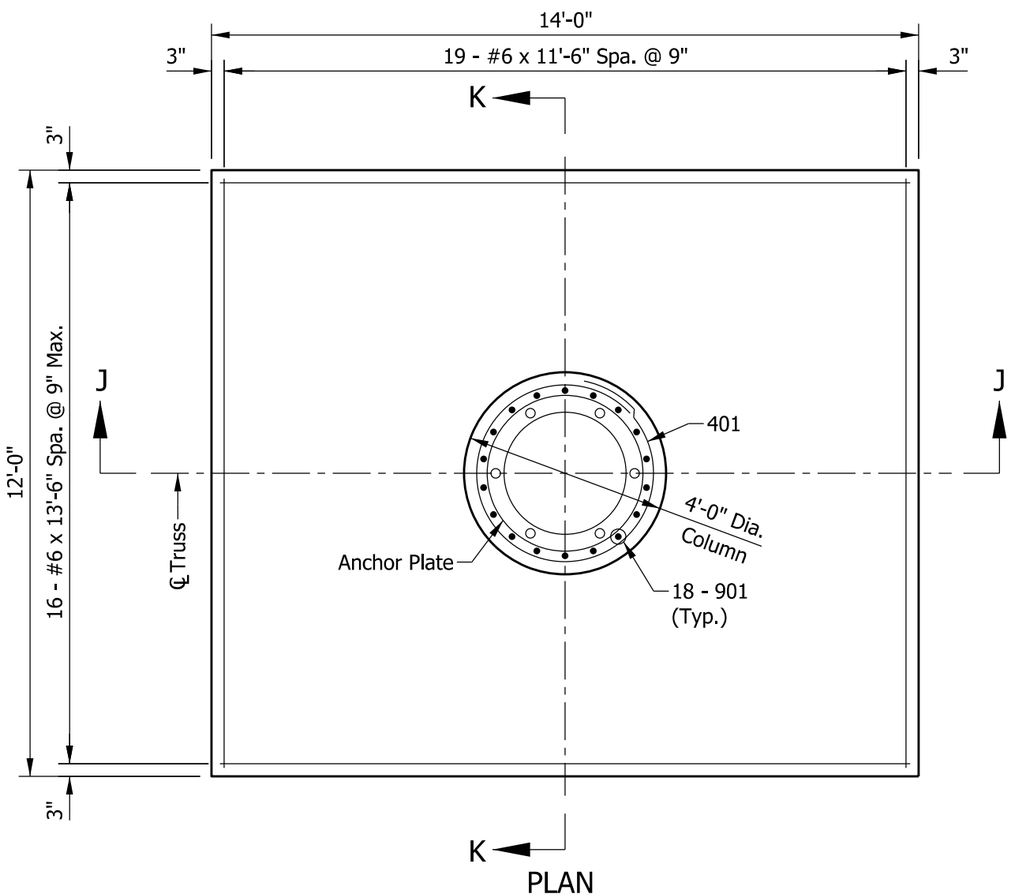

PLAN

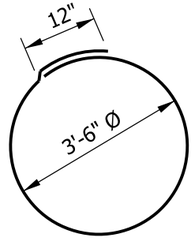

401 X 12'-0"

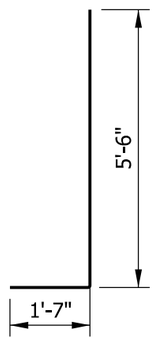

901 X 7'-1"

NOTES:

1. This standard foundation design is applicable for all tri-chord sign structures.
2. The design is based on allowable gross soil bearing pressure of 1500 psf.
3. All reinforcing bars to be epoxy coated.

(4) See Standard Drawing E 802-TCSS-12 for anchor bolts.

(5) Top of the footing shall be a minimum of 4'-0" below the pavement or ground line.

BILL OF MATERIALS			
EPOXY-COATED REINFORCING BARS			
MARK OR SIZE	NO. OF BARS	LENGTH	WEIGHT
901	18	7'-1"	
Total #9			434 LBS
#6	19	11'-6"	
#6	16	13'-6"	
Total #6			652 LBS
401	5	12'-0"	
Total #4			40 LBS
Total Epoxy-Coated Reinforcing Bars			1126 LBS
MISCELLANEOUS			
Concrete, Class A			11.4 CYS
Surface Seal			0.5 SYS

INDIANA DEPARTMENT OF TRANSPORTATION

TRI-CHORD SIGN STRUCTURE SPREAD FOUNDATION

SEPTEMBER 2013

STANDARD DRAWING NO. E 802-TCSS-15

ALFREDO B. HANZA
REGISTERED
No. 60020657
STATE OF INDIANA
PROFESSIONAL ENGINEER

/s/ Alfredo B. Hanza 02/22/13
DESIGN STANDARDS ENGINEER DATE

/s/ Mark A. Miller 03/27/13
CHIEF ENGINEER DATE

INDEX	
SHEET NO.	SUBJECT
1	Index
2	Pole Dimensions and Details
3	Arm Dimensions and Details
4	Base Plate and Pole Top Cover Details
5	Arm Connection Details
6	Handhole and I.D. Tag Details
7	Loading Diagrams
8	Foundation, Drilled Shaft Type E, for Dual Arms 35' or Less
9	Foundation, Drilled Shaft Type F, for Dual Arms Greater Than 35' to 45'

INDIANA DEPARTMENT OF TRANSPORTATION

SIGNAL DUAL ARM CANTILEVERS
DRAWING INDEX

SEPTEMBER 2013

STANDARD DRAWING NO. E 805-SDAC-01

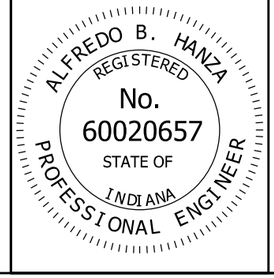

/s/ Alfredo B. Hanza *02/05/13*
DESIGN STANDARDS ENGINEER DATE

/s/ Mark A. Miller *03/27/13*
CHIEF ENGINEER DATE

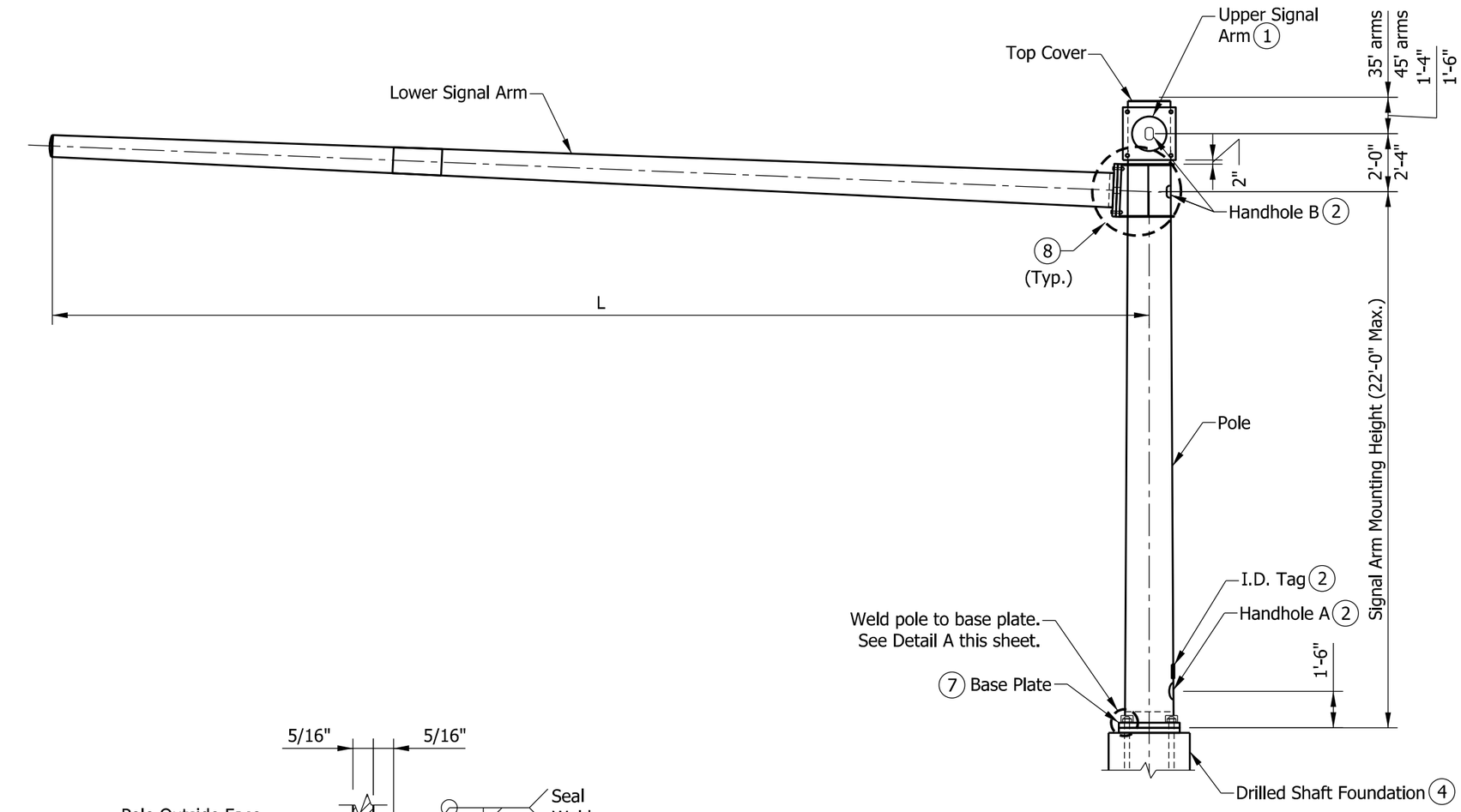

ELEVATION

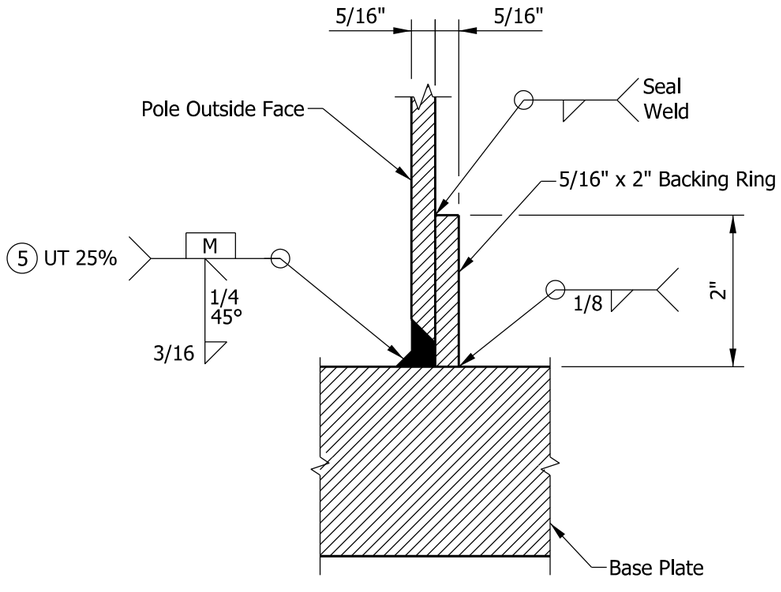

POLE/BASE PLATE WELD DETAIL A

POLE DIMENSIONS (6)		
CANTILEVER ARM LENGTHS L (FT)	BASE DIAMETER (IN.)	WALL THICKNESS (IN.)
15' to 35'	18	5/16
> 35' to 45'	24	5/16

NOTES:

(1) This structure is a dual arm cantilever design for traffic signals. Cantilever arms can be positioned at 20° to 180° to each other.

(2) See Standard Drawing E 805-SDAC-06 for handhole and I.D. tag details.

3. See Standard Drawings E 805-SGGR-01 through -03 for grounding details.

(4) See Standard Drawings E 805-SDAC-08 and -09 for foundation details.

(5) A minimum of 25% of the pole to base plate welds shall be ultransonically tested (UT).

(6) Pole and arms may be octagonal or circular shaped and shall have a 0.14 in./ft taper. All member diameters shown are outside diameter.

(7) See Standard Drawing E 805-SDAC-04 for base plate details.

(8) See Standard Drawing E 805-SDAC-05 for arm connection details.

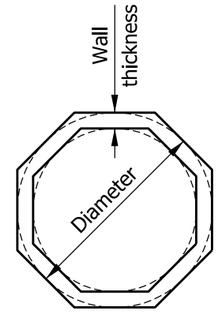

OCTAGON AND CIRCULAR TUBULAR SHAPE (6)

INDIANA DEPARTMENT OF TRANSPORTATION

SIGNAL DUAL ARM CANTILEVERS
POLE DIMENSIONS AND DETAILS

SEPTEMBER 2013

STANDARD DRAWING NO. E 805-SDAC-02

ALFREDO B. HANZA REGISTERED No. 60020657 STATE OF INDIANA PROFESSIONAL ENGINEER

/s/ Alfredo B. Hanza 02/05/13
DESIGN STANDARDS ENGINEER DATE

/s/ Mark A. Miller 03/27/13
CHIEF ENGINEER DATE

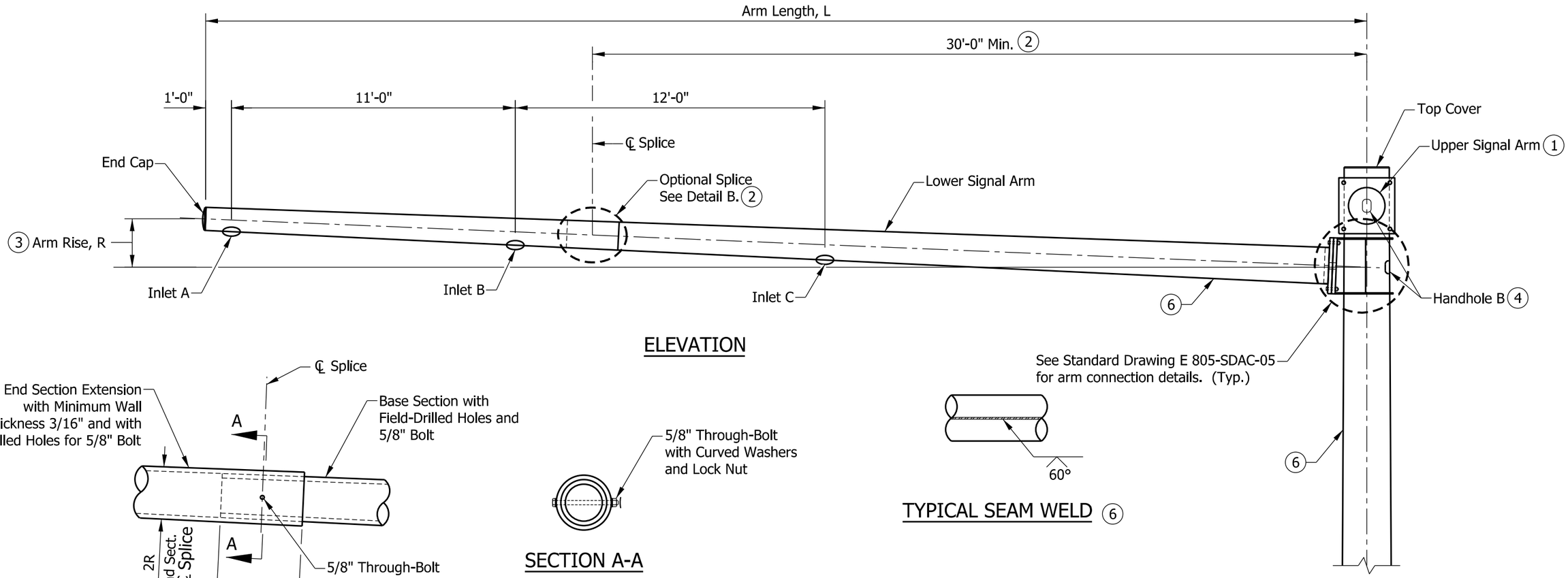

ELEVATION

DETAIL B

SECTION A-A

TYPICAL SEAM WELD (6)

SIGNAL DUAL ARM CANTILEVER DATA				
ARM LENGTH L (FT.)	ARM DIAMETER AT POLE (IN.)	ARM WALL THICKNESS (IN.)	ARM RISE R (IN.) (3)	CABLE INLETS
15	14	5/16	7 1/2	A, B
20	14	5/16	10	A, B
25	14	5/16	12 1/2	A, B
30	14	5/16	15	A, B
35	14	5/16	17 1/2	A, B, C
40	17	5/16	20	A, B, C
45	17	5/16	22 1/2	A, B, C

NOTES:

(1) Upper signal arm can be oriented 20° to 180° from lower signal arm. The dimensions and details shall be as shown on this drawing.

(2) Optional splices can be used for greater than 40' mast arms. The splice shall be located a minimum of 30' from the pole. The end extension section of the arm shall have a wall thickness of 3/16" or greater. Field assembly to achieve a snug tight joint (min. overlap not less than 3 times the inside radius ofthe end section).

(3) Arm rise is measured in the undeflected position without vertical loads on the arm.

(4) See Standard Drawing E 805-SDAC-06 for handhole B details.

5. See Standard Drawing E 805-SDAC-07 for loading diagrams.

(6) If seam welds are used, the weld location shall be along the bottom for the arms, and on the side of pole as shown. All pole and arm seam welds shall be 100% ultrasonically tested.

7. Number of cable inlets depends on arm L (see table on this sheet). The inlet diameter shall be 1 3/4" with rubber grommet (typ.).

INDIANA DEPARTMENT OF TRANSPORTATION

SIGNAL DUAL ARM CANTILEVERS
ARM DIMENSIONS AND DETAILS

SEPTEMBER 2013

STANDARD DRAWING NO. E 805-SDAC-03



/s/ Alfredo B. Hanza 02/05/13
DESIGN STANDARDS ENGINEER DATE

/s/ Mark A. Miller 03/27/13
CHIEF ENGINEER DATE

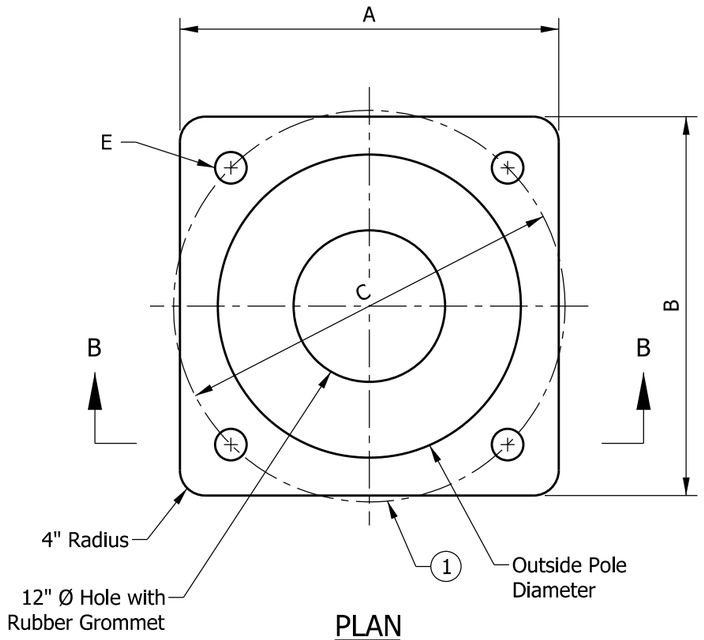

PLAN

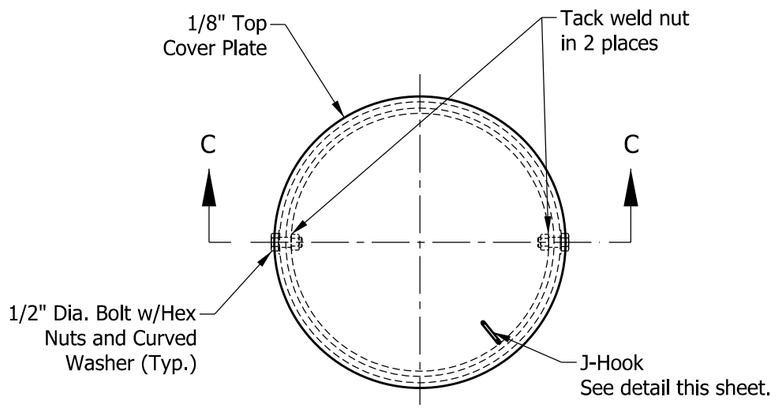

PLAN
TOP COVER - STEEL COLUMN

NOTES:

1. Anchor bolt circle shall allow clearance for the anchor bolt washers. Cutting or trimming of the washers will not be allowed.
2. See Standard Drawing E 805-SDAC-02 for handhole locations.
3. See Standard Drawing E 805-SDAC-06 for handhole details.

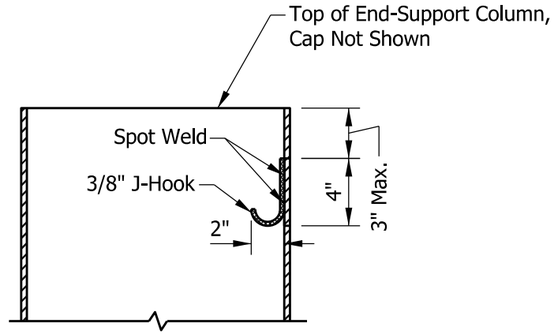

CABLE J-HOOK

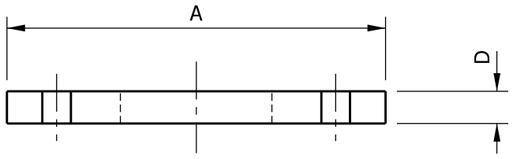

SECTION B-B
BASE PLATE

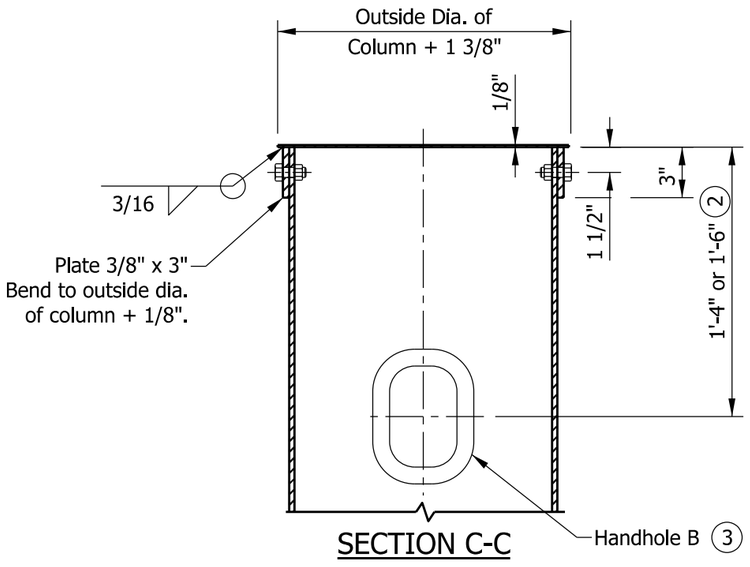

SECTION C-C

BASE PLATE DATA				
POLE DIAMETER (IN.)	PLATE DIMENSIONS A X B (IN. X IN.)	ANCHOR BOLTS CIRCLE C (IN.)	PLATE THICKNESS D (IN.)	BOLT HOLE DIAMETER E (IN.)
18	26 x 26	25	2 1/4	2 9/16
24	30 x 30	31	2 1/2	2 13/16

INDIANA DEPARTMENT OF TRANSPORTATION

SIGNAL DUAL ARM CANTILEVERS
BASE PLATE AND POLE TOP COVER DETAILS

SEPTEMBER 2013

STANDARD DRAWING NO. E 805-SDAC-04

ALFREDO B. HANZA
REGISTERED
No. 60020657
STATE OF INDIANA
PROFESSIONAL ENGINEER

/s/ Alfredo B. Hanza 02/05/13
DESIGN STANDARDS ENGINEER DATE

/s/ Mark A. Miller 03/27/13
CHIEF ENGINEER DATE

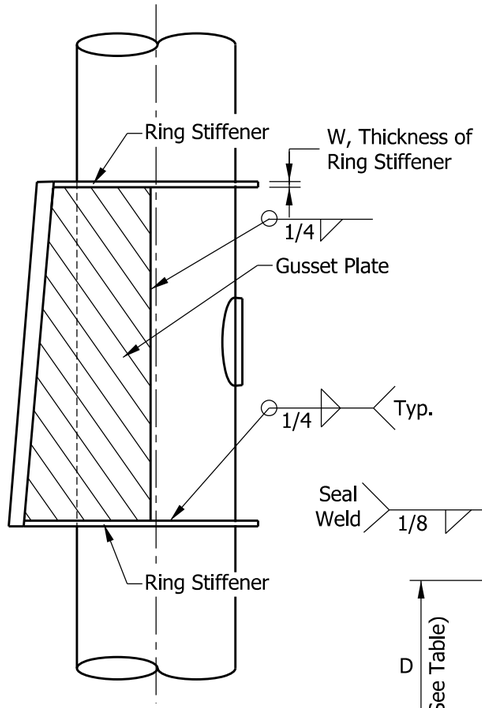

ELEVATION OF GUSSET PLATE

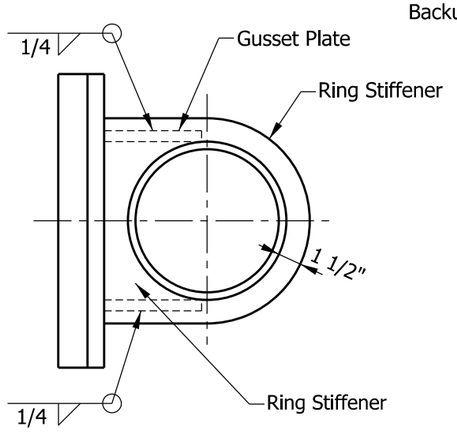

TOP OF GUSSET PLATE

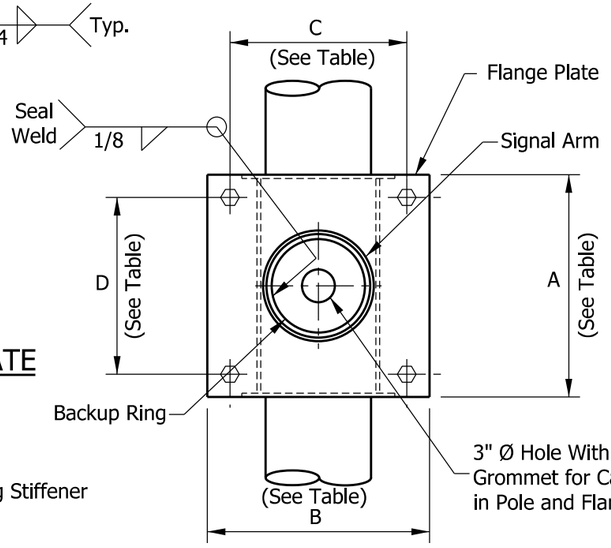

SECTION D-D

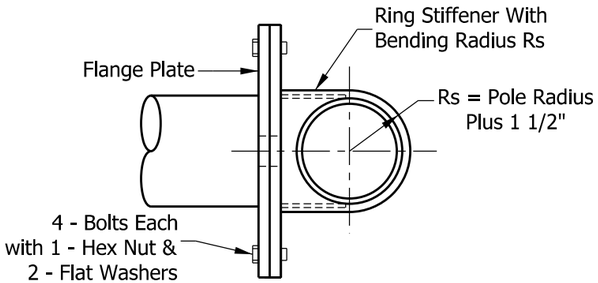

SECTION E-E

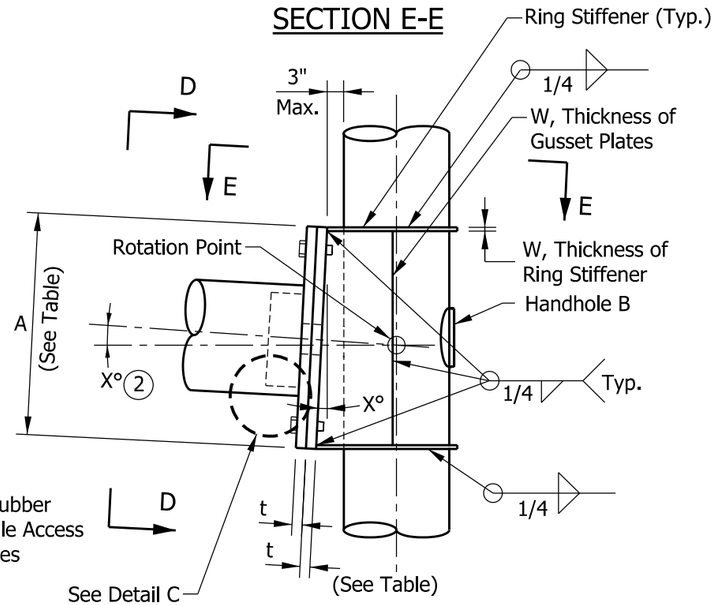

ELEVATION

SIGNAL ARM CONNECTION DETAIL

NOTES:

1. See Standard Drawing E 805-SDAC-06 for Handhole B details.
2. The required signal arm rise shall be built into the gusset plate at the angle X. The angle X is described as arc tan R/L, where R is the arm rise and L is the arm length. Both R and L vary and are listed in the Signal Dual Arm Cantilever Data table on Standard Drawing E 805-SDAC-03.

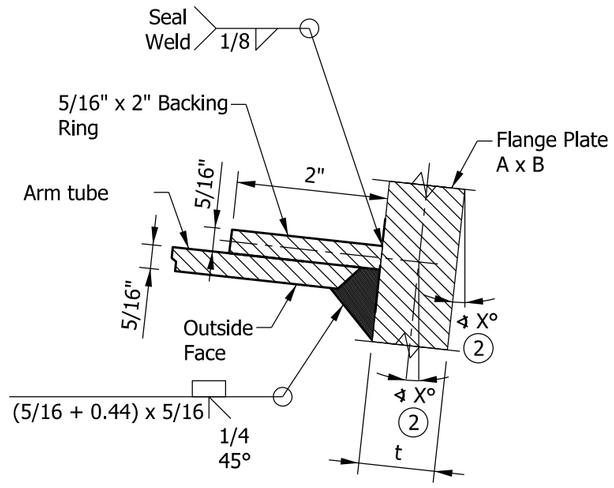

DETAIL C
ARM WELD

TABLE OF PLATES AND BOLTS FOR SIGNAL DUAL ARM CANTILEVER						
ARM LENGTH (FT)	FLANGE PLATE A X B (IN.)	BOLT PATTERN C X D (IN. X IN.)	RING STIFFENER & GUSSET PLATE THICKNESS W (IN.)	FLANGE PLATE THICKNESS t (IN.)	BOLT DIAMETER (IN.)	BOLT LENGTH (IN.)
15 to 35	22 x 22	17 1/2 x 17 1/2	3/8	1 1/2	1 1/4	5
> 35 to 45	26 x 26	21 1/2 x 21 1/2	1/2	2	1 1/2	6

INDIANA DEPARTMENT OF TRANSPORTATION

SIGNAL DUAL ARM CANTILEVERS
ARM CONNECTION DETAILS

SEPTEMBER 2013

STANDARD DRAWING NO. E 805-SDAC-05

ALFREDO B. HANZA
REGISTERED
No. 60020657
STATE OF INDIANA
PROFESSIONAL ENGINEER

/s/ Alfredo B. Hanza 02/05/13
DESIGN STANDARDS ENGINEER DATE

/s/ Mark A. Miller 03/27/13
CHIEF ENGINEER DATE

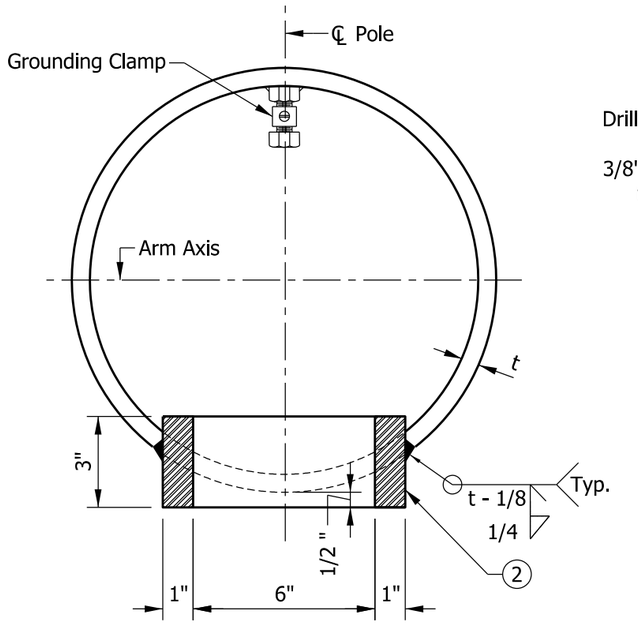

HANDHOLE A
SECTION ACROSS POLE

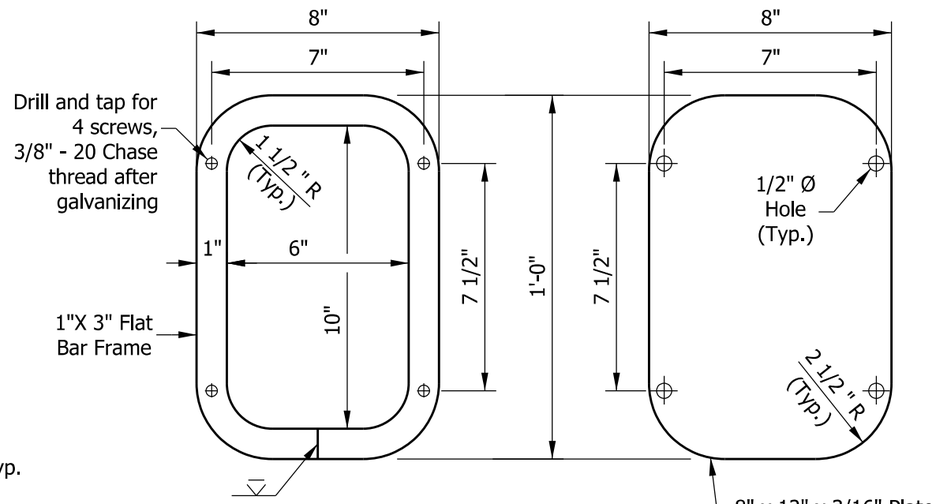

FRAME DETAIL COVER

HANDHOLE A

NOTES:

1. Handhole A to be used at the base of the pole. Handhole B to be used at all other locations.
2. In lieu of fabricated handhole frame as shown, frame may be cut from 3" plate (rolling direction vertical).
3. See Standard Drawing E 805-SDAC-02 for handhole locations.
4. I.D. tag is a 1/8" stainless steel plate with the following information stamped in 1/2" black letters:

Manufacturer _____, Drawing/Order #_____
Contract #_____, Structure Type _____
Fabrication Date _____, Pole Mounting Height _____

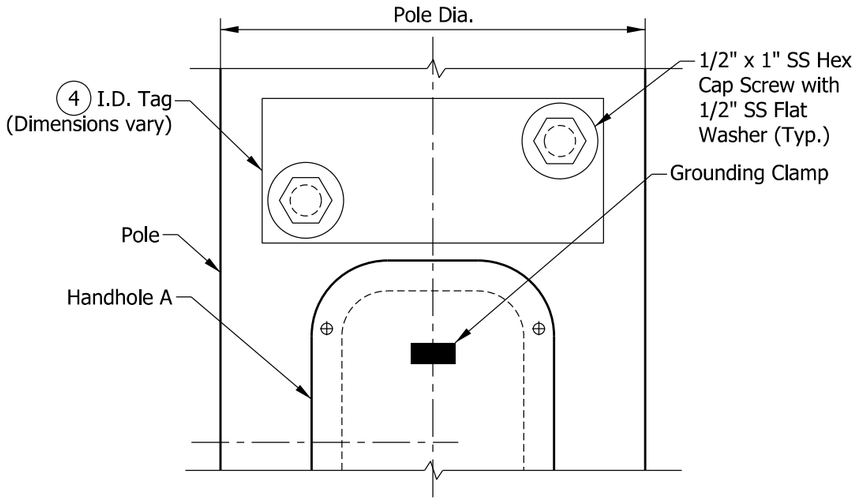

PARTIAL ELEVATION
AT HANDHOLE A

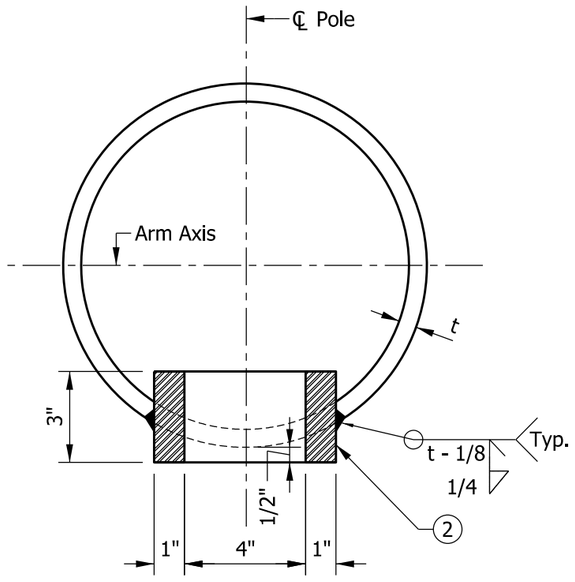

HANDHOLE B
SECTION ACROSS POLE

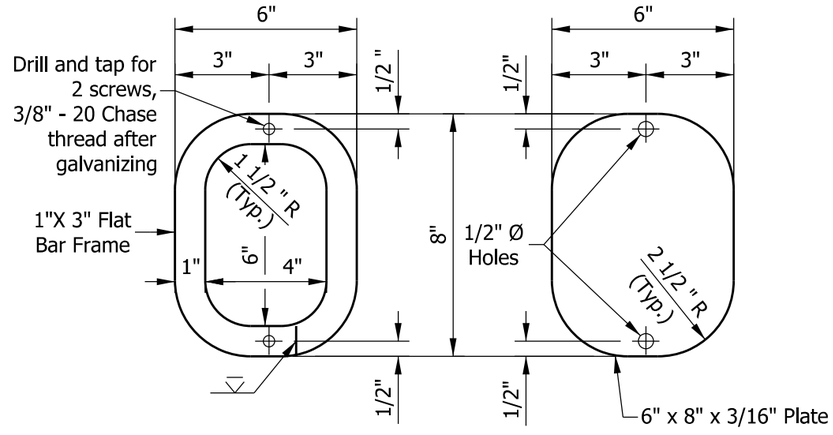

FRAME DETAIL COVER

HANDHOLE B

INDIANA DEPARTMENT OF TRANSPORTATION

SIGNAL DUAL ARM CANTILEVERS
HANDHOLE AND I.D. TAG DETAILS

SEPTEMBER 2013

STANDARD DRAWING NO. E 805-SDAC-06

ALFREDO B. HANZA
REGISTERED
No.
60020657
STATE OF
INDIANA
PROFESSIONAL ENGINEER

/s/ Alfredo B. Hanza 02/05/13
DESIGN STANDARDS ENGINEER DATE

/s/ Mark A. Miller 03/27/13
CHIEF ENGINEER DATE

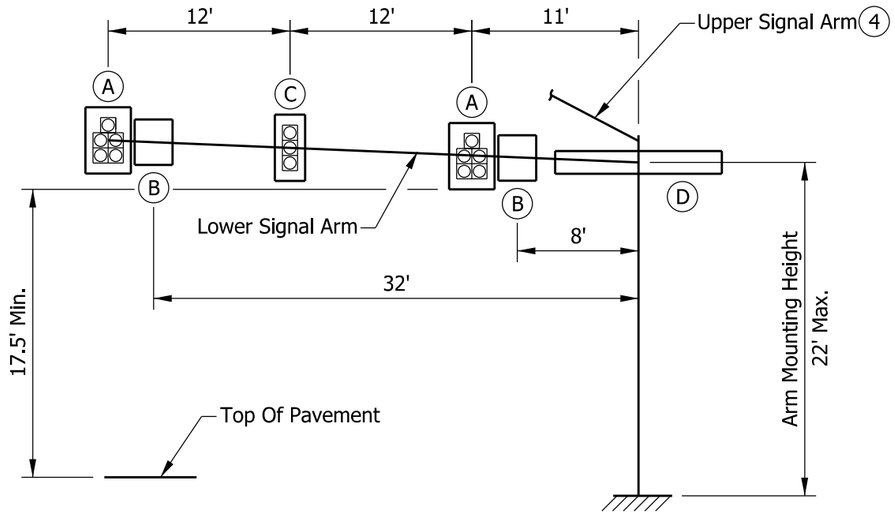

35' ARMS

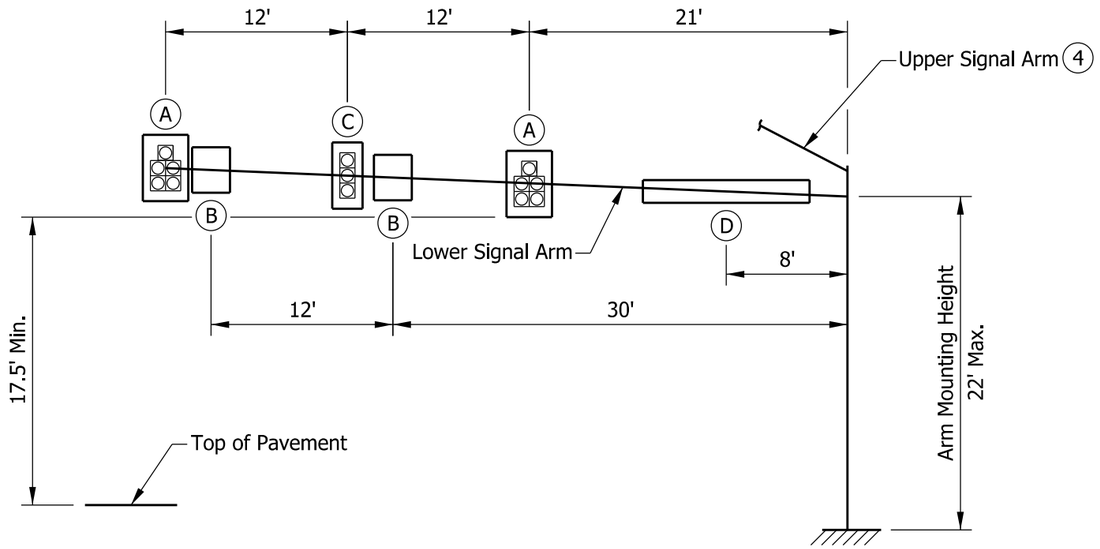

45' ARMS

NOTES:

1. The arms and pole are designed for the loading conditions shown. For arm lengths shorter than 35', the loading shall not exceed the loading shown for the 35' arm length.
2. Foundation Type E is designed for arm length of 35' or less. See Standard Drawing E 805-SDAC-08.
3. Foundation Type F is designed for arm length of greater than 35' to 45'. See Standard Drawing E 805-SDAC-09.

(4) Both arms can be loaded as shown in loading diagrams.

SIGNAL AND SIGN LOADING INFORMATION TABLE			
DEVICE	DESCRIPTION	DEVICE AREA (SQ FT)	WEIGHT (LBS)
(A)	12" - 5 section signal head with backplates	14.5	69
(B)	36" x 30" regulatory sign	7.5	19
(C)	12" - 3 section signal head with backplates	10.1	55
(D)	18" x 11'-0" street name sign	16.5	41

INDIANA DEPARTMENT OF TRANSPORTATION

SIGNAL DUAL ARM CANTILEVERS
LOADING DIAGRAMS

SEPTEMBER 2013

STANDARD DRAWING NO. E 805-SDAC-07

ALFREDO B. HANZA REGISTERED No. 60020657 STATE OF INDIANA PROFESSIONAL ENGINEER

/s/ Alfredo B. Hanza 02/05/13
DESIGN STANDARDS ENGINEER DATE

/s/ Mark A. Miller 03/27/13
CHIEF ENGINEER DATE

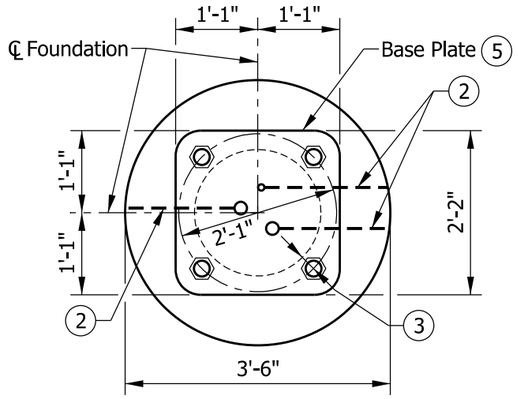

PLAN

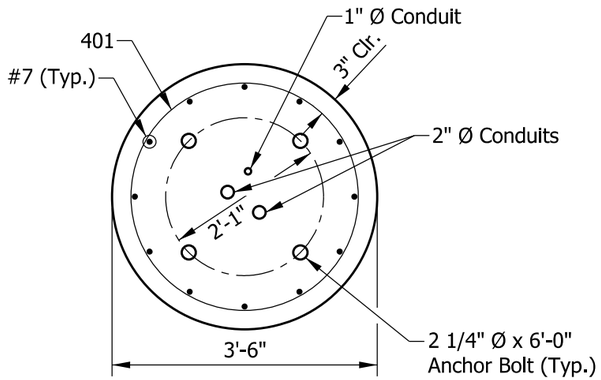

SECTION F-F

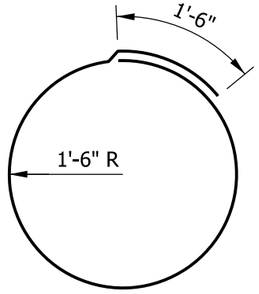

401 X 11'-0"

NOTES:

1. The Type E foundations are to be used for 35' dual arm structures and cohesive soil with minimum Q_u = 750 lb/ft or sand with minimum friction angle 30°.
2. A tooled line or other permanent marking shall be provided on the top of the foundation to indicate the direction of the conduits' exit ends.
3. 2 1/2" minimum clearance to weld at pole. Anchor bolt circle shall allow clearance for the anchor bolt washers. Cutting or trimming of the washers will not be allowed.
4. The foundation shall be poured monolithically and shall have no construction joint.
5. See Standard Drawing E 805-SDAC-04 for base plate details.

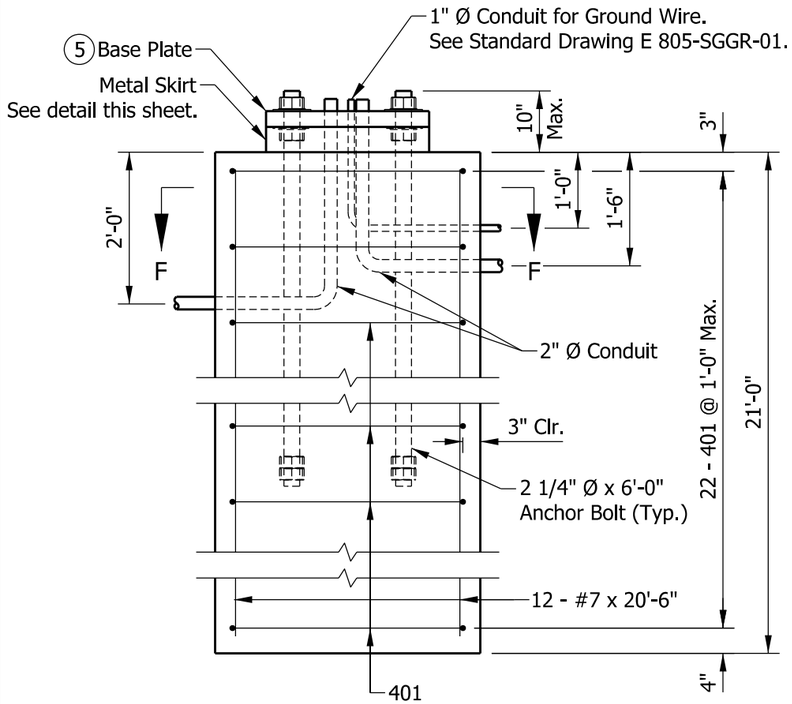

DRILLED SHAFT
ELEVATION

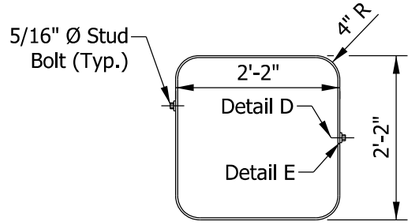

PLAN

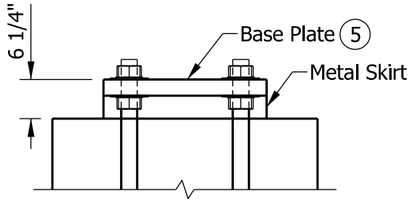

ELEVATION

METAL SKIRT DETAIL

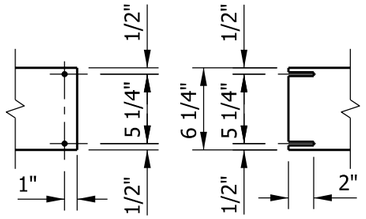

DETAIL D DETAIL E

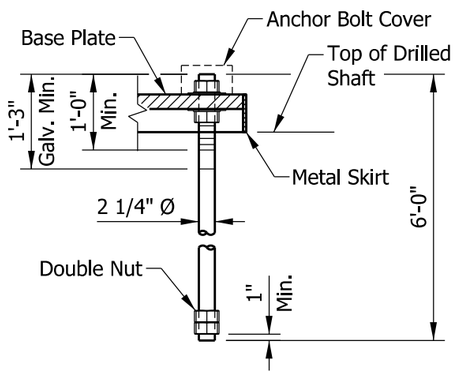

ANCHOR BOLT DETAIL

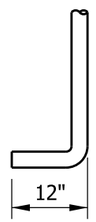

ALTERNATE ANCHOR BOLT HOOK

BILL OF MATERIALS			
REINFORCING BARS			
MARK OR SIZE	NO. OF BARS	LENGTH	WEIGHT
#7	12	20'-6"	
Total #7			503 LBS
401	22	11'-0"	
Total #4			162 LBS
Total Reinforcing Bars			665 LBS
CONCRETE			
Concrete, Class A			7.5 CYS

INDIANA DEPARTMENT OF TRANSPORTATION

SIGNAL DUAL ARM CANTILEVERS FOUNDATION, DRILLED SHAFT TYPE E FOR DUAL ARMS 35' OR LESS

SEPTEMBER 2013

STANDARD DRAWING NO. E 805-SDAC-08

ALFREDO B. HANZA REGISTERED No. 60020657 STATE OF INDIANA PROFESSIONAL ENGINEER

/s/ Alfredo B. Hanza 02/05/13
DESIGN STANDARDS ENGINEER DATE

/s/ Mark A. Miller 03/27/13
CHIEF ENGINEER DATE

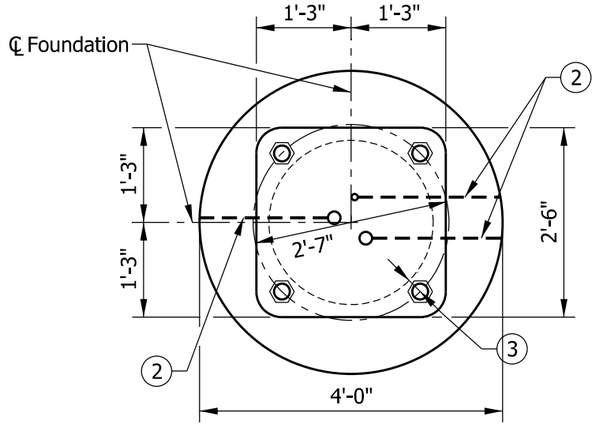

PLAN

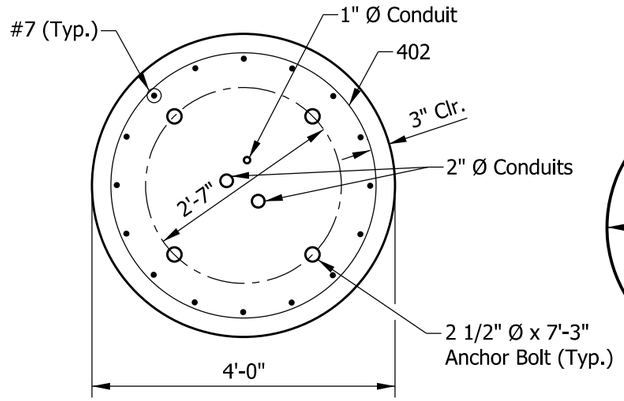

SECTION G-G

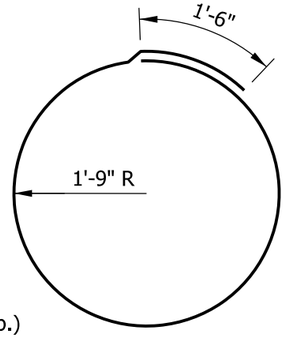

402 X 12'-6"

NOTES:

1. The Type E foundations are to be used for 35' dual arm structures and cohesive soil with minimum Q_u = 750 lb/ft or sand with minimum friction angle 30°.
2. A tooled line or other permanent marking shall be provided on the top of the foundation to indicate the direction of the conduits' exit ends.
3. 2 1/2" minimum clearance to weld at pole. Anchor bolt circle shall allow clearance for the anchor bolt washers. Cutting or trimming of the washers will not be allowed.
4. The foundation shall be poured monolithically and shall have no construction joint.
5. See Standard Drawing E 805-SDAC-04 for base plate details.

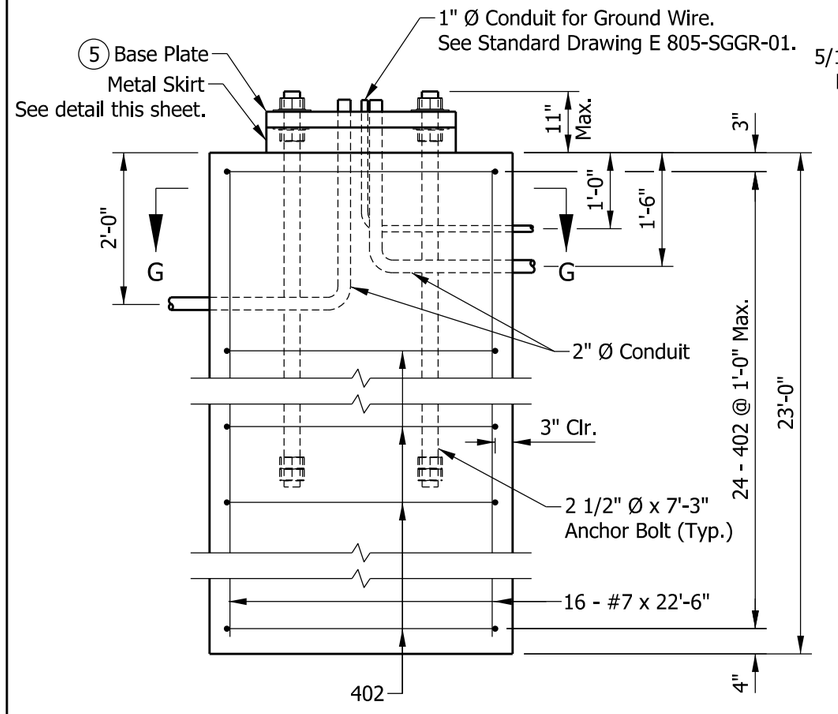

DRILLED SHAFT
ELEVATION

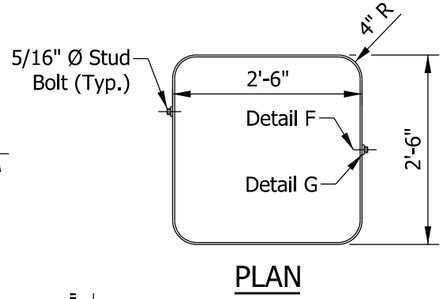

PLAN

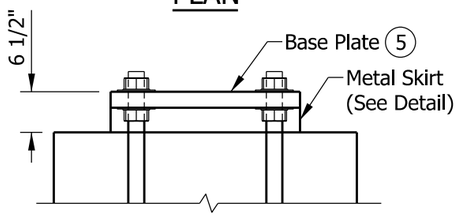

ELEVATION

METAL SKIRT DETAIL

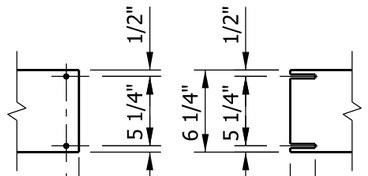

DETAIL F DETAIL G

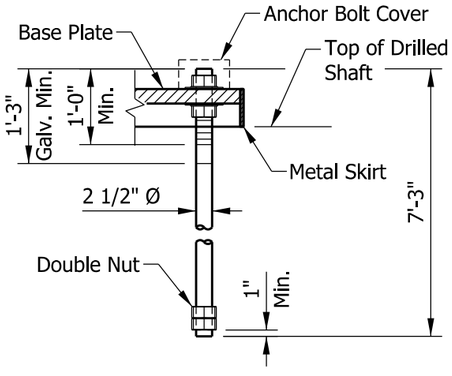

ANCHOR BOLT DETAIL



ALTERNATE ANCHOR BOLT HOOK

BILL OF MATERIALS			
REINFORCING BARS			
MARK OR SIZE	NO. OF BARS	LENGTH	WEIGHT
#7	16	22'-6"	
Total #7			736 LBS
402	24	12'-6"	
Total #4			201 LBS
Total Reinforcing Bars			937 LBS
CONCRETE			
Concrete, Class A			10.7 CYS

INDIANA DEPARTMENT OF TRANSPORTATION

SIGNAL DUAL ARM CANTILEVERS FOUNDATION, DRILLED SHAFT TYPE F FOR DUAL ARMS GREATER THAN 35' TO 45'

SEPTEMBER 2013

STANDARD DRAWING NO. E 805-SDAC-09

ALFREDO B. HANZA
REGISTERED
No. 60020657
STATE OF INDIANA
PROFESSIONAL ENGINEER

/s/ Alfredo B. Hanza 02/05/13
DESIGN STANDARDS ENGINEER DATE

/s/ Mark A. Miller 03/27/13
CHIEF ENGINEER DATE

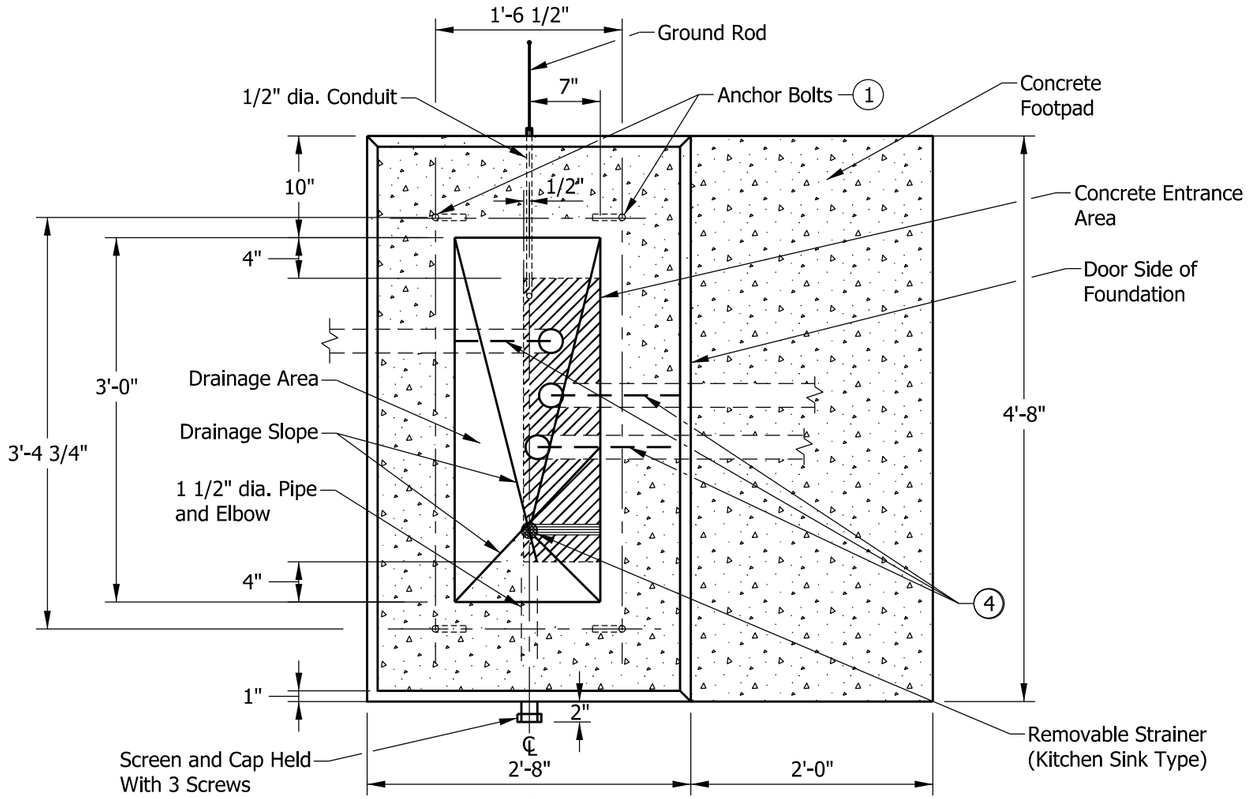

PLAN

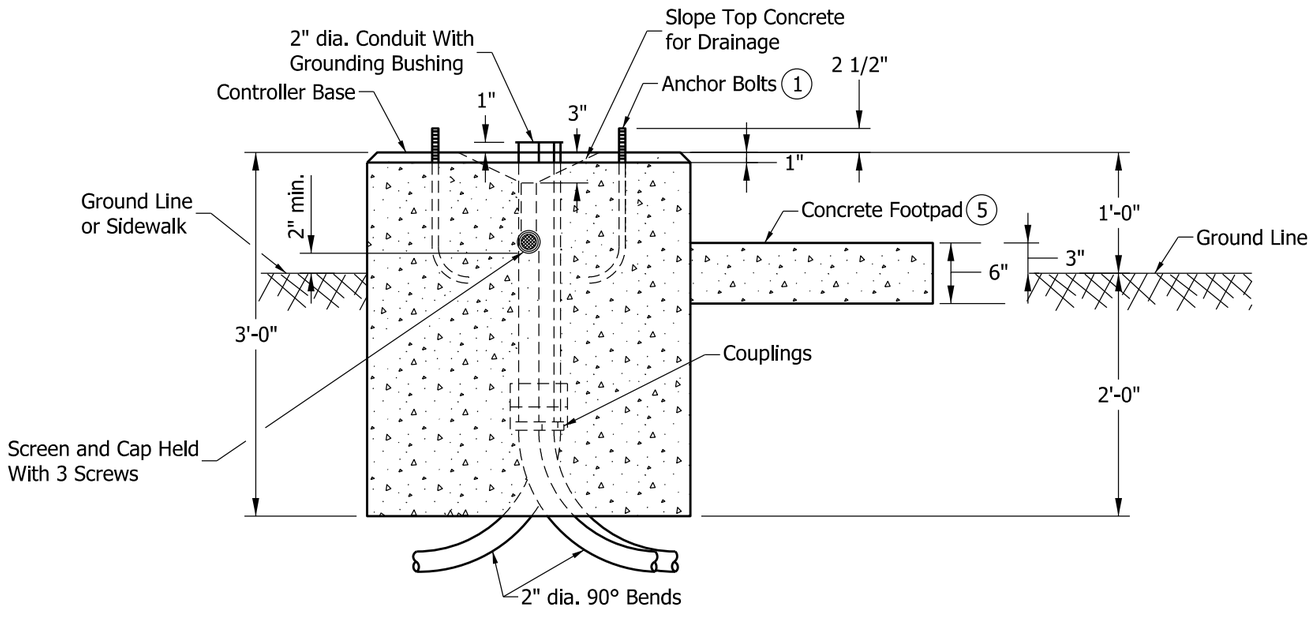

ELEVATION

NOTES:

(1) See Standard Drawing E 805-SGPB-01 for anchor bolt details.

2. Install minimum 3 - 2" dia. conduits for each foundation.

3. Conduits not used shall be capped below grade. More inlets shall be installed as required on plans.

(4) Make a permanent line on top of the concrete foundation indicating the direction of the 2" conduits' exit.

(5) Concrete footpad shall be constructed of the same class concrete as the foundation.

INDIANA DEPARTMENT OF TRANSPORTATION

SIGNAL CONTROLLER CABINET FOUNDATION TYPE P-1

SEPTEMBER 2013

STANDARD DRAWING NO. E 805-SGCF-01

ALFREDO B. HANZA
REGISTERED
No. 60020657
STATE OF INDIANA
PROFESSIONAL ENGINEER

/s/ Alfredo B. Hanza 02/22/13
DESIGN STANDARDS ENGINEER DATE

/s/ Mark A. Miller 03/27/13
CHIEF ENGINEER DATE

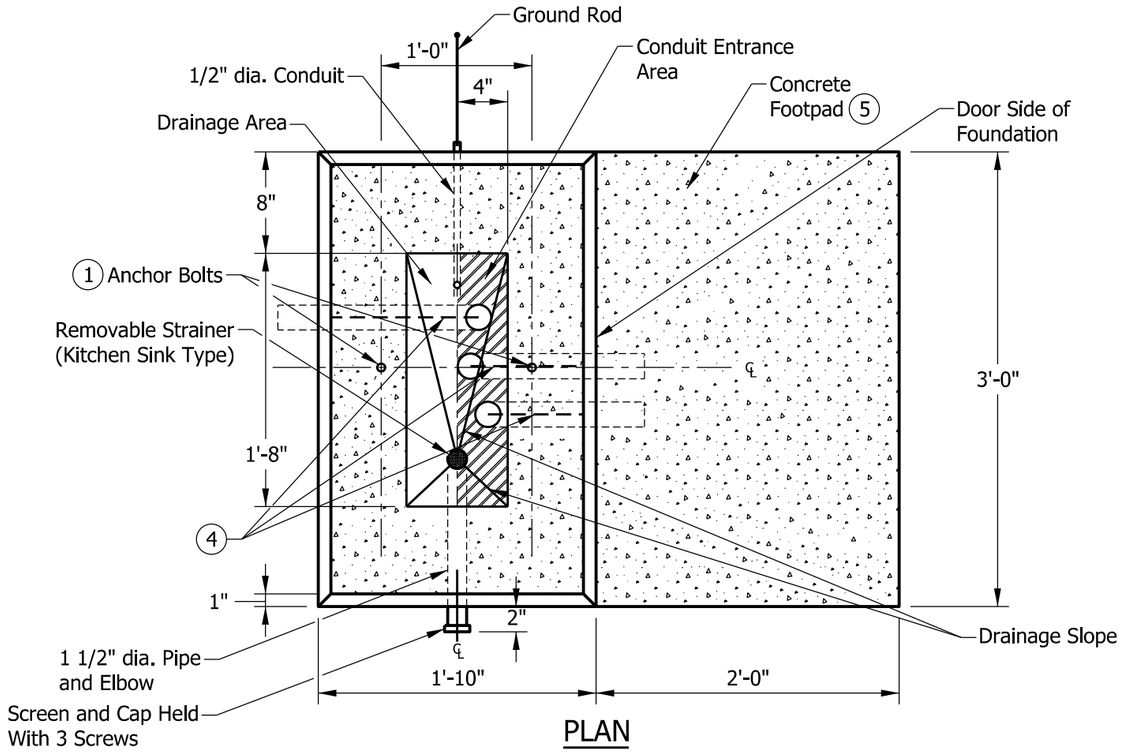

PLAN

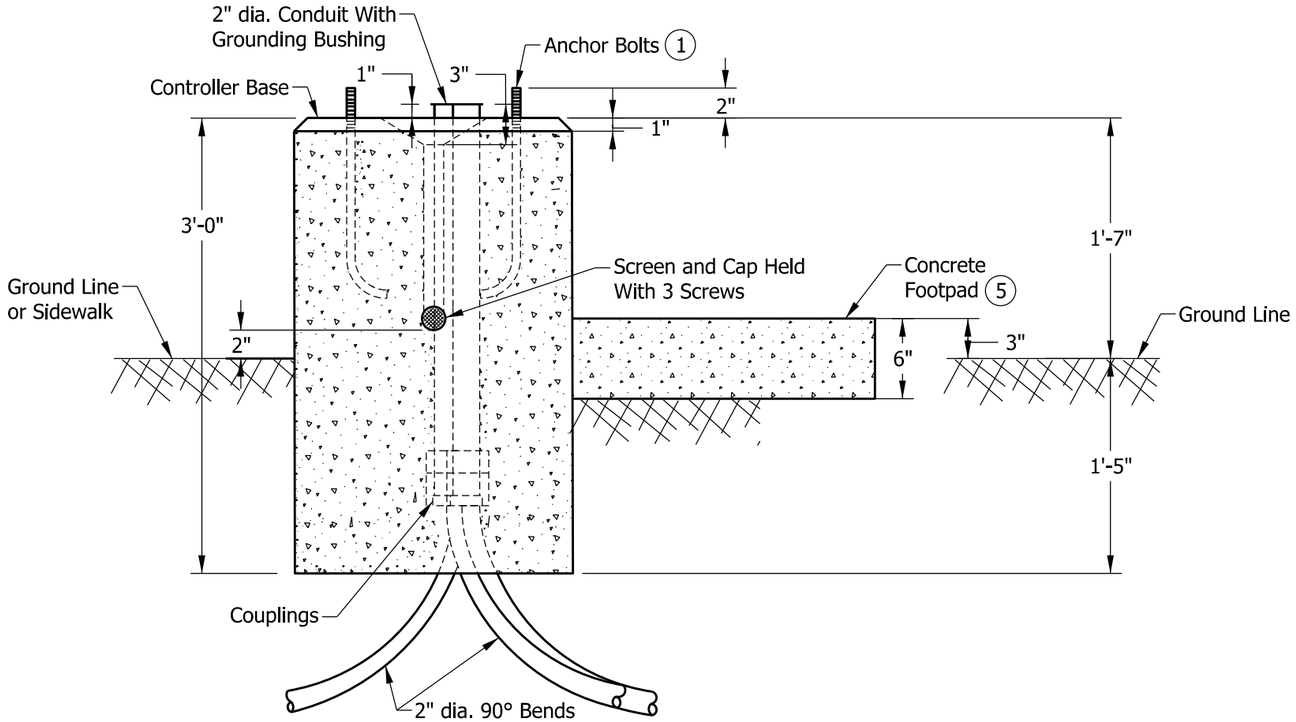

ELEVATION

NOTES:

(1) See Standard Drawing E 805-SGPB-01 for anchor bolt details.

2. Install minimum 3 - 2" dia. conduits for each foundation.

3. Conduits not used shall be capped below grade. More inlets shall be installed as required on plans.

(4) Make a permanent line on top of the concrete foundation indicating the direction of the 2" conduits' exit.

(5) Concrete footpad shall be constructed of the same class concrete as the foundation.

INDIANA DEPARTMENT OF TRANSPORTATION

SIGNAL CONTROLLER CABINET FOUNDATION TYPE M

SEPTEMBER 2013

STANDARD DRAWING NO. E 805-SGCF-02

ALFREDO B. HANZA REGISTERED No. 60020657 STATE OF INDIANA PROFESSIONAL ENGINEER

/s/ Alfredo B. Hanza	*02/22/13*
DESIGN STANDARDS ENGINEER	DATE
/s/ Mark A. Miller	*03/27/13*
CHIEF ENGINEER	DATE

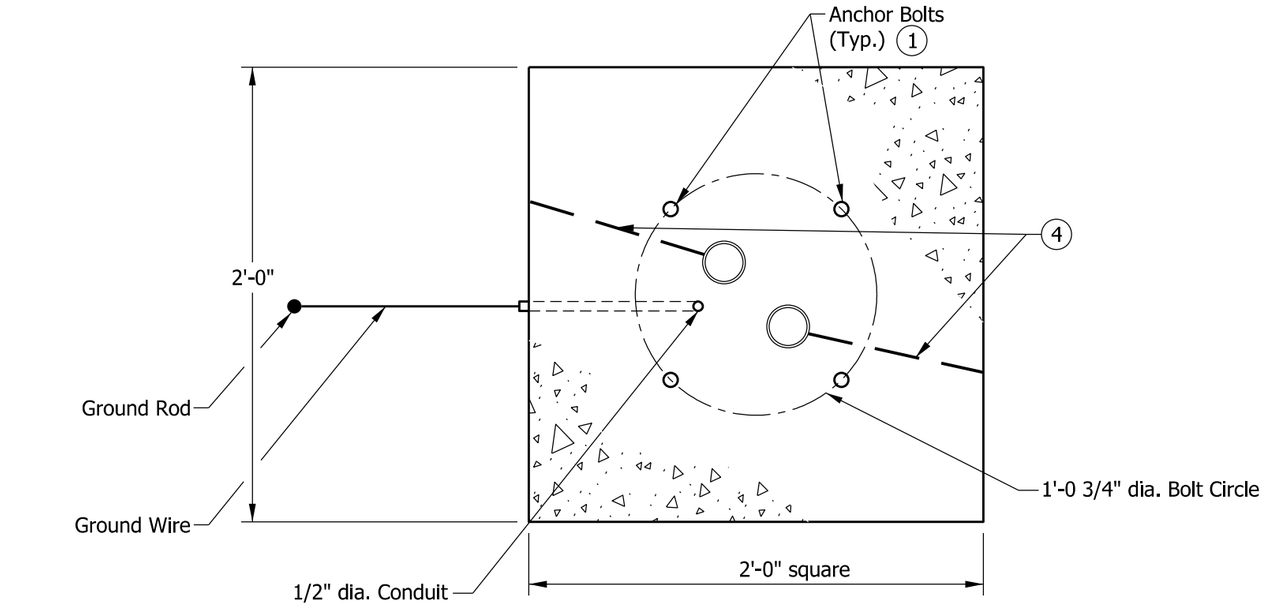

PLAN

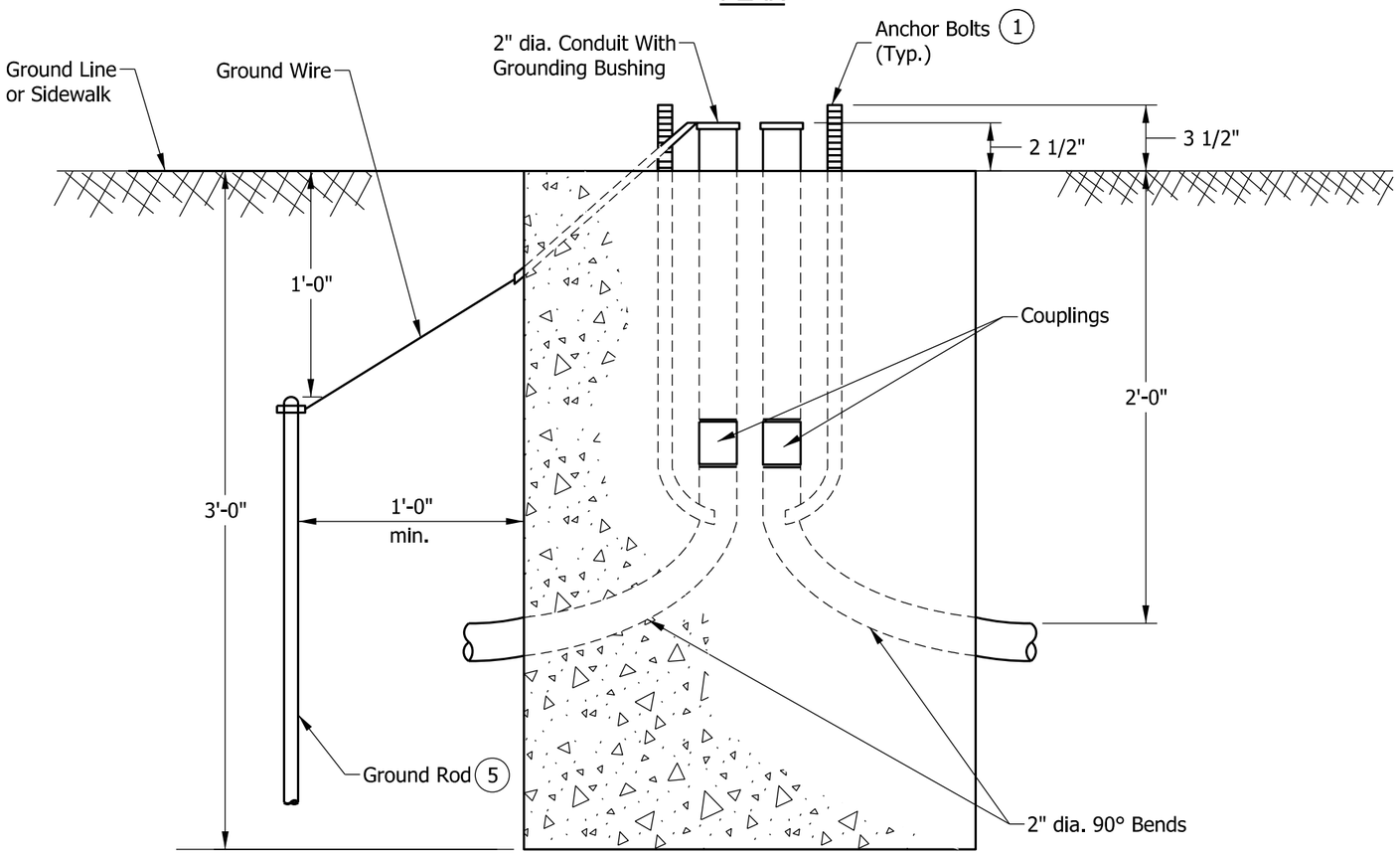

ELEVATION

GENERAL NOTES:

1. See Standard Drawing E 805-SGPB-01 for anchor bolt details.
2. A minimum of two 2-in. dia. conduit inlets shall be installed for each foundation.
3. Conduit inlets not used shall be capped below grade. More inlets shall be installed as required on plans.
4. Make a permanent line on top of the concrete foundation indicating the direction of the 2-in. conduits' exit.
5. The ground rod has length 8 ft.

INDIANA DEPARTMENT OF TRANSPORTATION

SIGNAL PEDESTAL
FOUNDATION TYPE A

SEPTEMBER 2013

STANDARD DRAWING NO. E 805-SGCF-03

ALFREDO B. HANZA
REGISTERED
No. 60020657
STATE OF INDIANA
PROFESSIONAL ENGINEER

/s/ Alfredo B. Hanza 02/27/13
DESIGN STANDARDS ENGINEER DATE

/s/ Mark A. Miller 03/27/13
CHIEF ENGINEER DATE

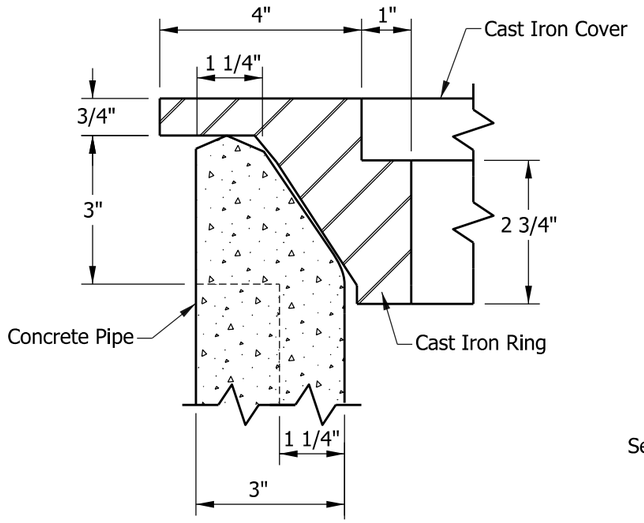

DETAIL A

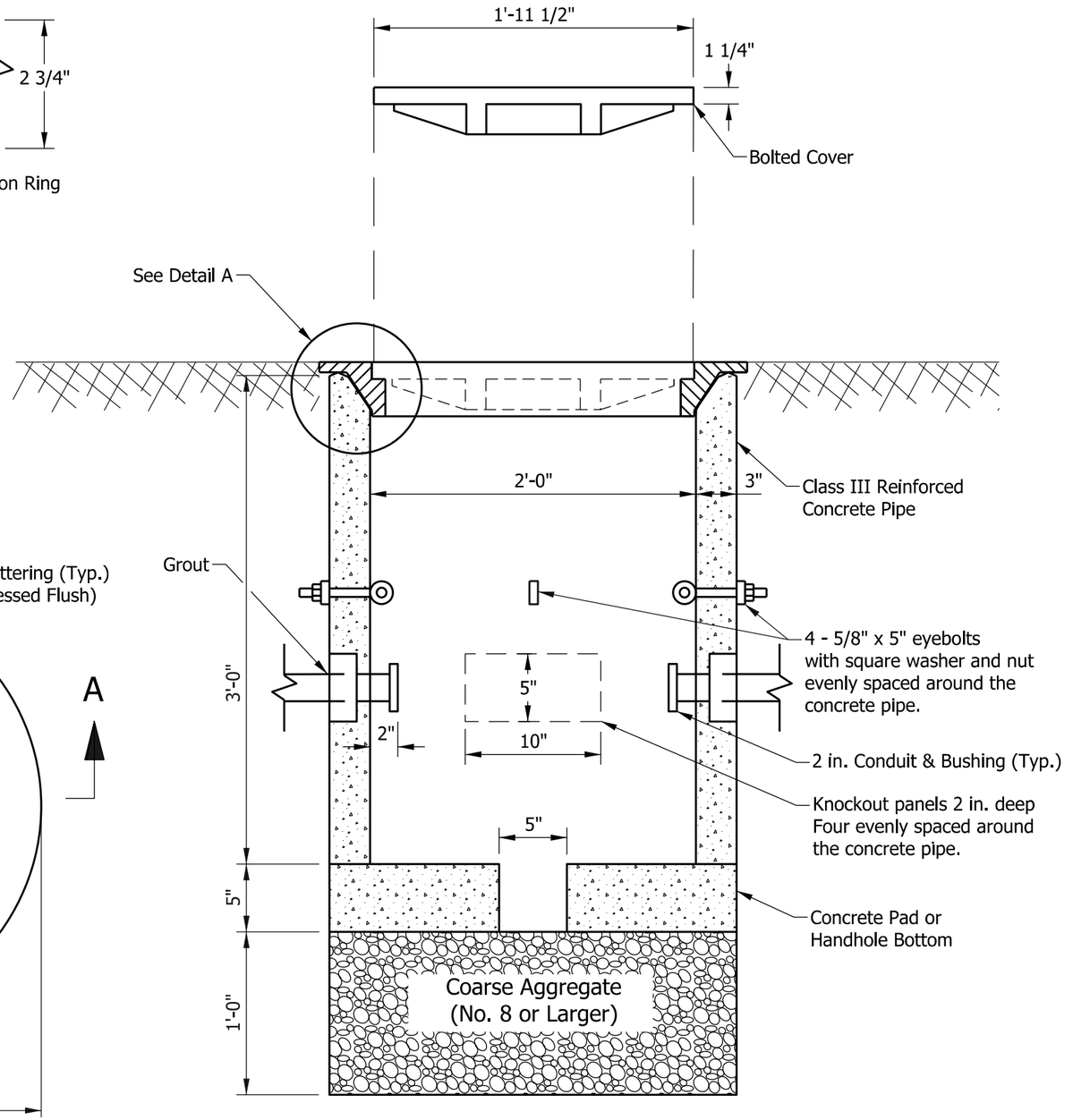

SECTION A-A

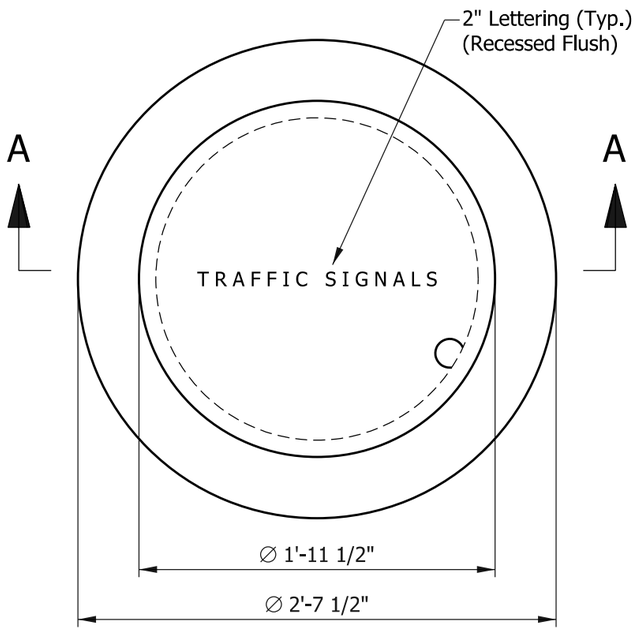

PLAN

NOTES:

1. Approximate weight for cast iron ring and cover shall be 320 lb.
2. The ring and cover shall be secure. Attachment hardware shall be countersunk.
3. See Standard Drawing E 805-SGCF-06 for Signal Handhole, Type II, Polymer Concrete and cover.

INDIANA DEPARTMENT OF TRANSPORTATION

SIGNAL HANDHOLE, TYPE I
CONCRETE

SEPTEMBER 2013

STANDARD DRAWING NO. E 805-SGCF-04

ALFREDO B. HANZA
REGISTERED
No. 60020657
STATE OF INDIANA
PROFESSIONAL ENGINEER

/s/ Alfredo B. Hanza 02/22/13
DESIGN STANDARDS ENGINEER DATE

/s/ Mark A. Miller 03/27/13
CHIEF ENGINEER DATE

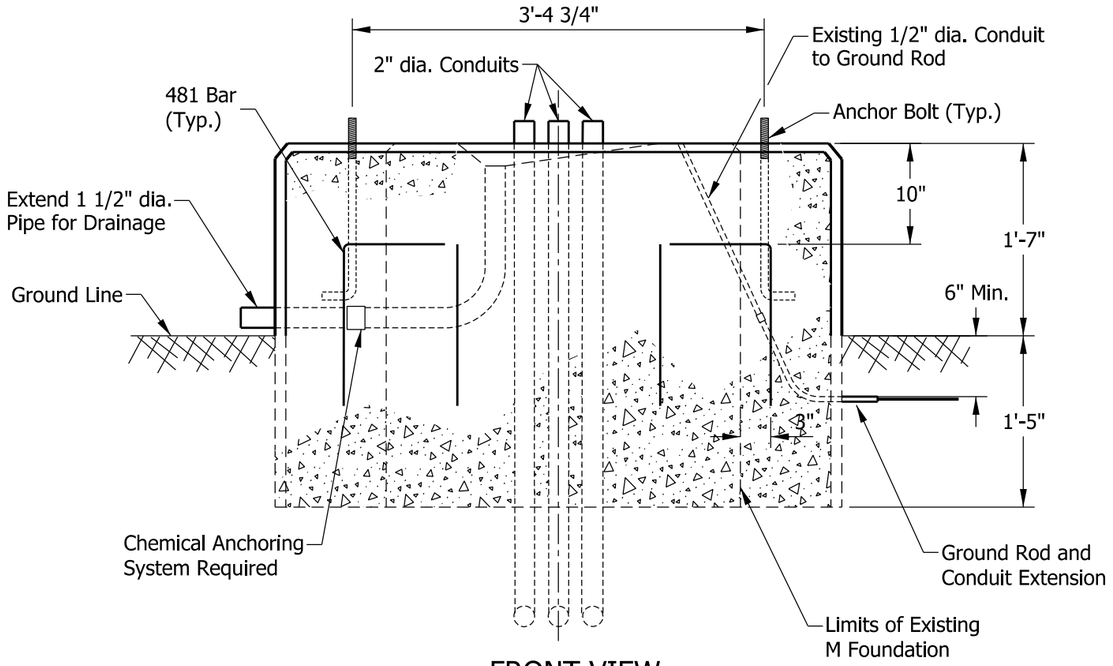

FRONT VIEW

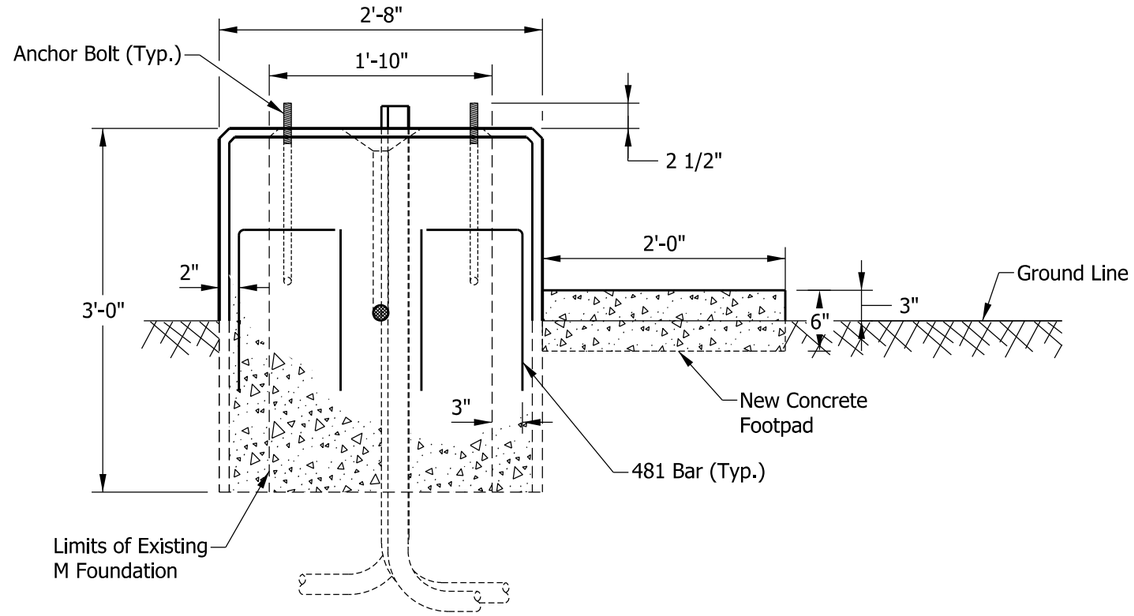

SIDE VIEW A-A

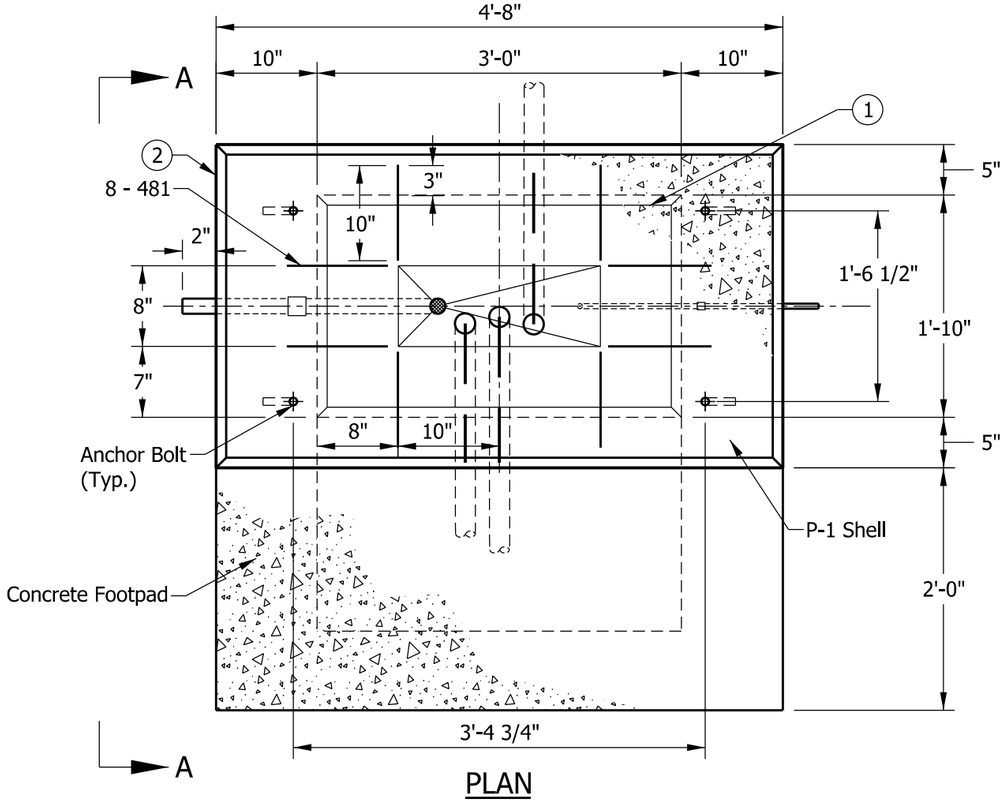

PLAN

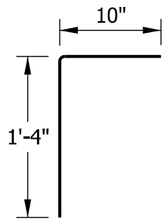

481 x 2'-2"

NOTES:

(1) See Standard Drawing E 805-SGCF-02 for Type M foundation details.

(2) See Standard Drawing E 805-SGCF-01 for Type P-1 foundation details.

3. Existing anchor bolts shall be cut at or below top of existing foundation.

4. See Standard Drawing E 805-SGCF-03 for General Notes.

INDIANA DEPARTMENT OF TRANSPORTATION

EXISTING M FOUNDATION MODIFIED TO P-1 FOUNDATION

SEPTEMBER 2013

STANDARD DRAWING NO. E 805-SGCF-05

ALFREDO B. HANZA REGISTERED No. 60020657 STATE OF INDIANA PROFESSIONAL ENGINEER

/s/ Alfredo B. Hanza 02/28/13
DESIGN STANDARDS ENGINEER DATE

/s/ Mark A. Miller 03/27/13
CHIEF ENGINEER DATE

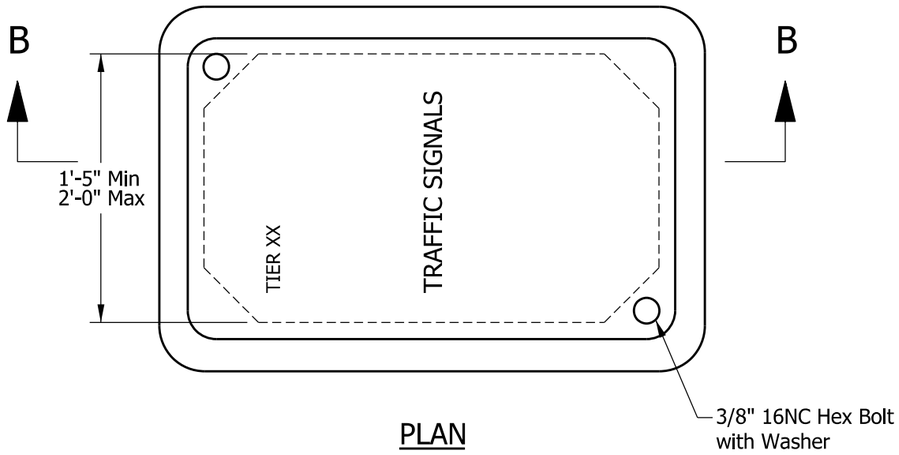

PLAN

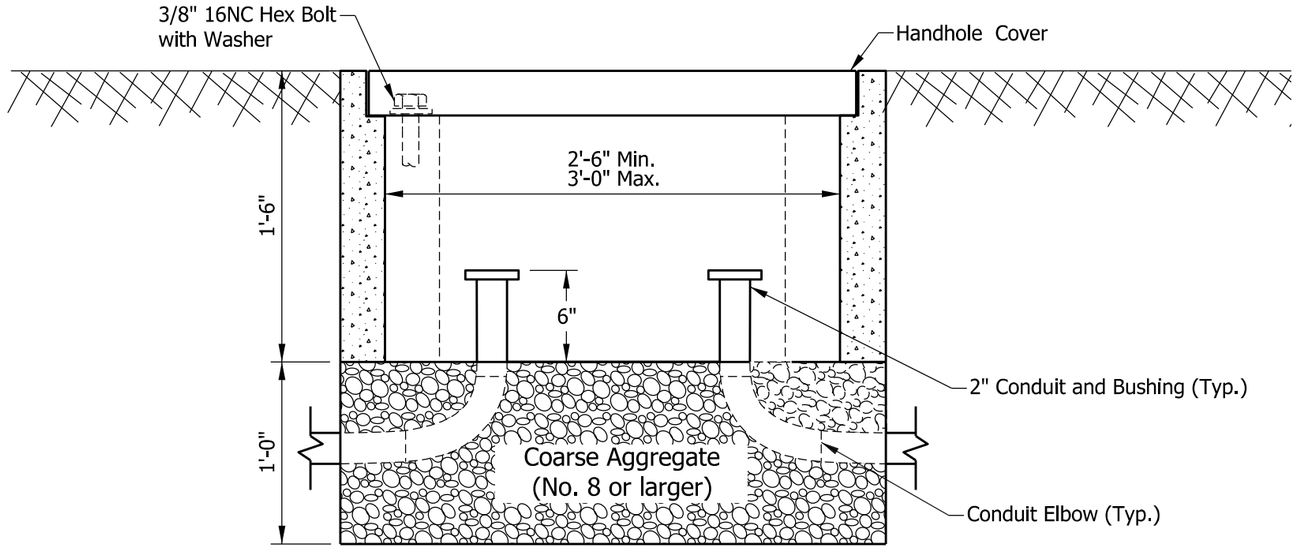

SECTION B-B

NOTE:

1. See Standard Drawing E 805-SGCF-04 for Signal Handhole, Type I, Concrete and cover.

INDIANA DEPARTMENT OF TRANSPORTATION

SIGNAL HANDHOLE, TYPE II
POLYMER CONCRETE

SEPTEMBER 2013

STANDARD DRAWING NO. E 805-SGCF-06

ALFREDO B. HANZA
REGISTERED
No.
60020657
STATE OF
INDIANA
PROFESSIONAL ENGINEER

/s/ Alfredo B. Hanza 02/22/13
DESIGN STANDARDS ENGINEER DATE

/s/ Mark A. Miller 03/27/13
CHIEF ENGINEER DATE

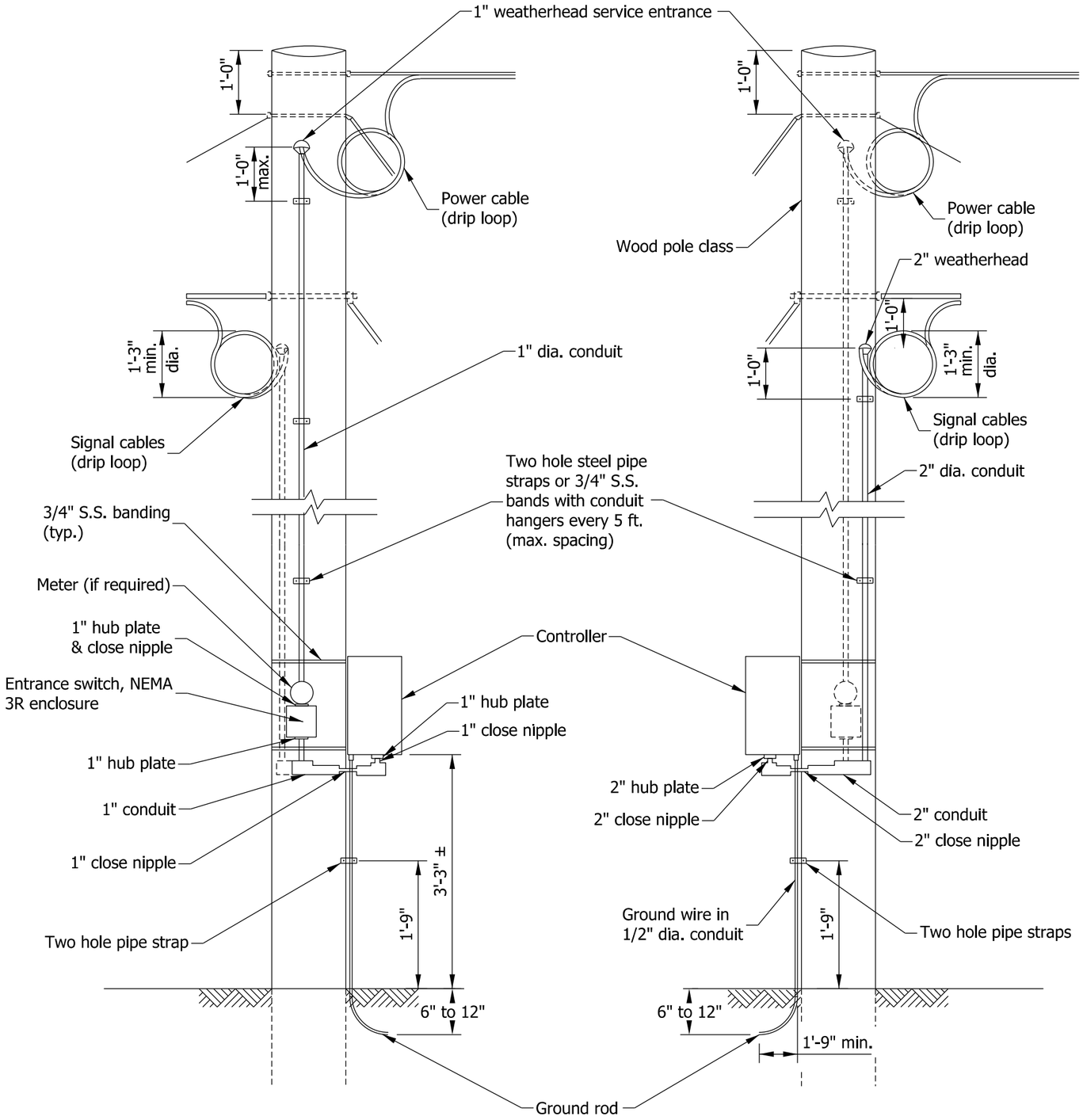

INDIANA DEPARTMENT OF TRANSPORTATION

SIGNAL SERVICE & CONTROLLER MOUNTED ON WOOD POLE

SEPTEMBER 2012

STANDARD DRAWING NO. E 805-SGCO-01

RICHARD L. VanCLEAVE REGISTERED No. 9750 STATE OF INDIANA PROFESSIONAL ENGINEER

/s/ Richard L. VanCleave 09/04/12

SUPERVISOR, ROADWAY STANDARDS DATE

/s/ Mark A. Miller 09/04/12

CHIEF ENGINEER DATE

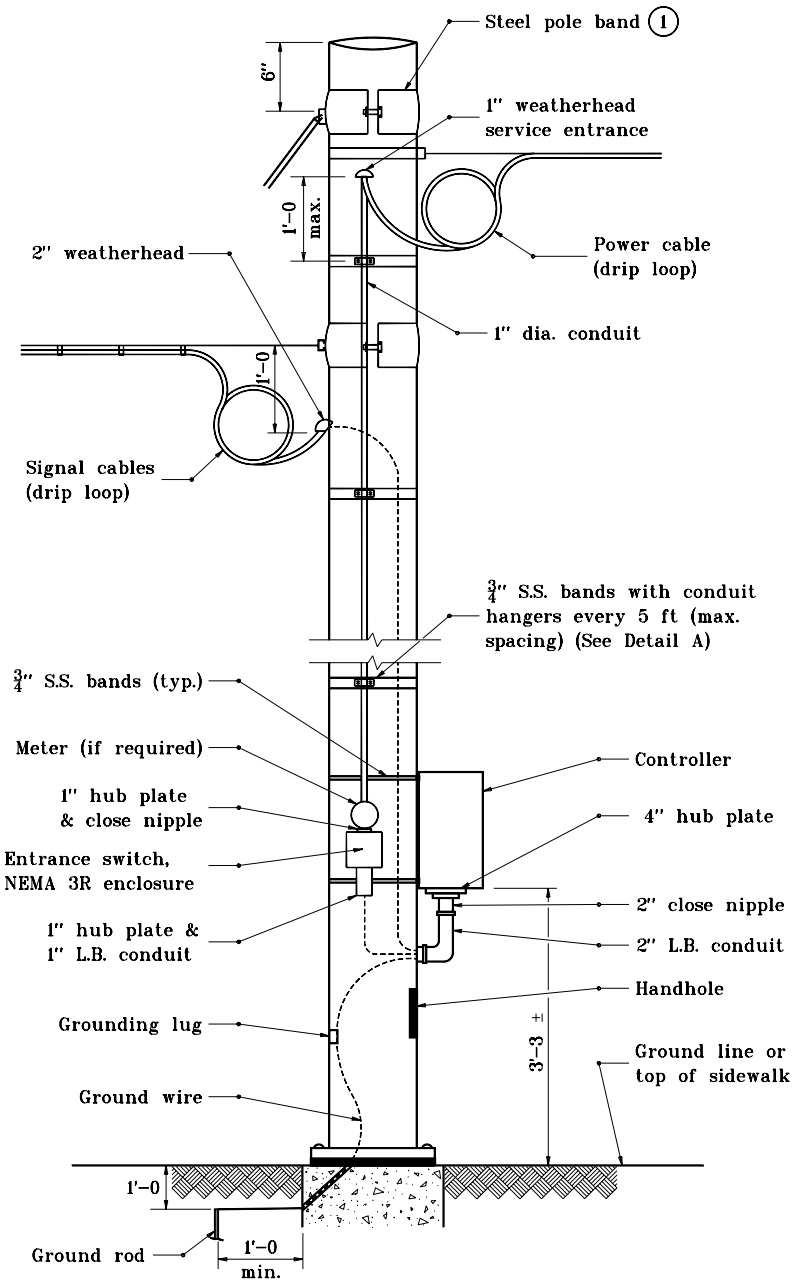

GENERAL NOTES

(1) See Standard Drawing E 805-SGSP-03 for details of bands.

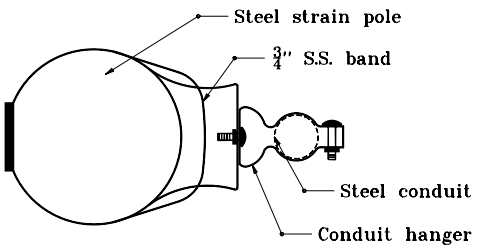

DETAIL A

INDIANA DEPARTMENT OF TRANSPORTATION

SIGNAL SERVICE & CONTROLLER MOUNTED ON STEEL POLE

SEPTEMBER 1998

STANDARD DRAWING NO. **E 805-SGCO-02**

ANTHONY L. UREMOVICH REGISTERED No. 18095 STATE OF INDIANA PROFESSIONAL ENGINEER

DESIGN STANDARDS ENGINEER

DETAILS PLACED IN THIS FORMAT 11-15-99

/s/ Anthony L. Uremovich 11-15-99
DESIGN STANDARDS ENGINEER DATE

/s/ Firooz Zandi 11-15-99
CHIEF HIGHWAY ENGINEER DATE

ORIGINALLY APPROVED 9-01-98

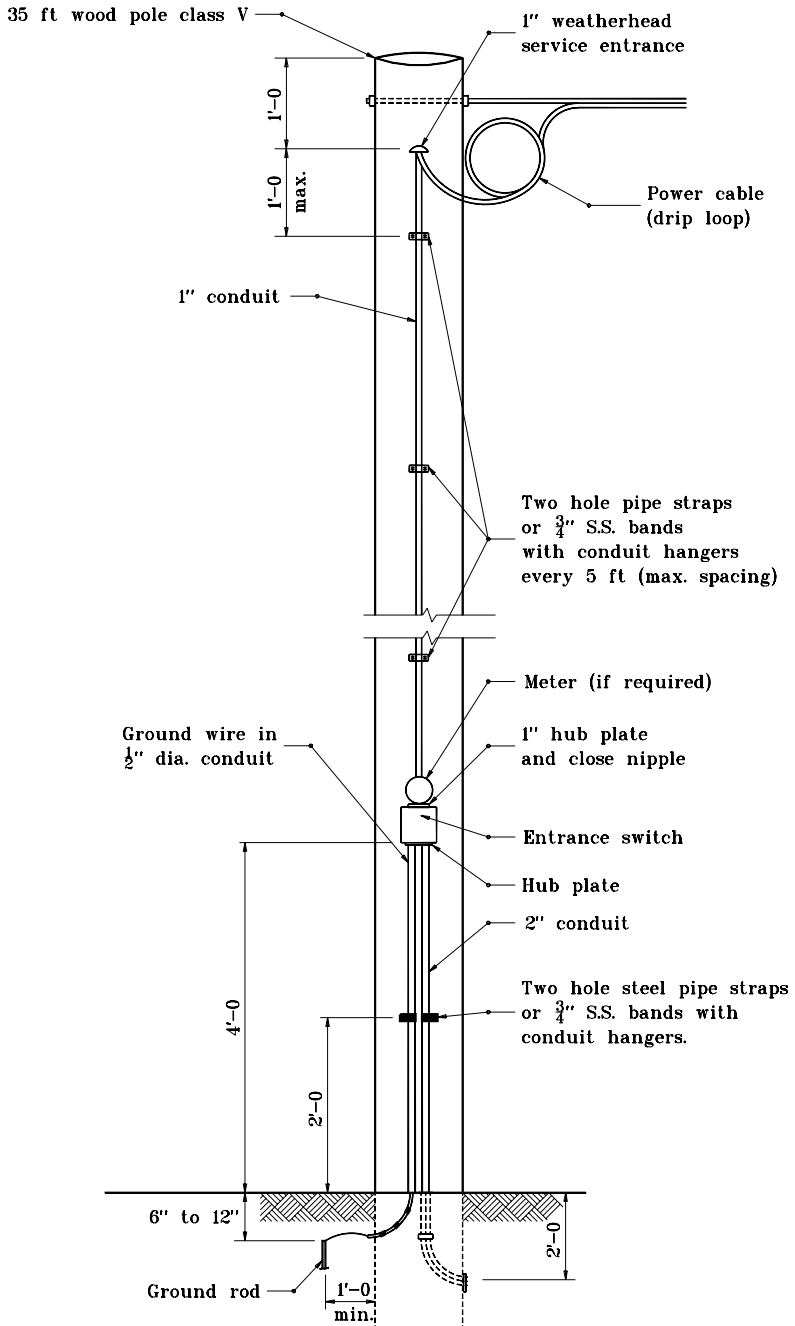

INDIANA DEPARTMENT OF TRANSPORTATION

SIGNAL SERVICE ON WOOD POLE

SEPTEMBER 1998

STANDARD DRAWING NO. **E 805-SGC0-03**

ANTHONY L. UREMOVICH REGISTERED No. 18095 STATE OF INDIANA PROFESSIONAL ENGINEER

DESIGN STANDARDS ENGINEER

DETAILS PLACED IN THIS FORMAT	11-15-99
/s/ Anthony L. Uremovich DESIGN STANDARDS ENGINEER	11-15-99 DATE
/s/ Firooz Zandi CHIEF HIGHWAY ENGINEER	11-15-99 DATE
ORIGINALLY APPROVED	9-01-98

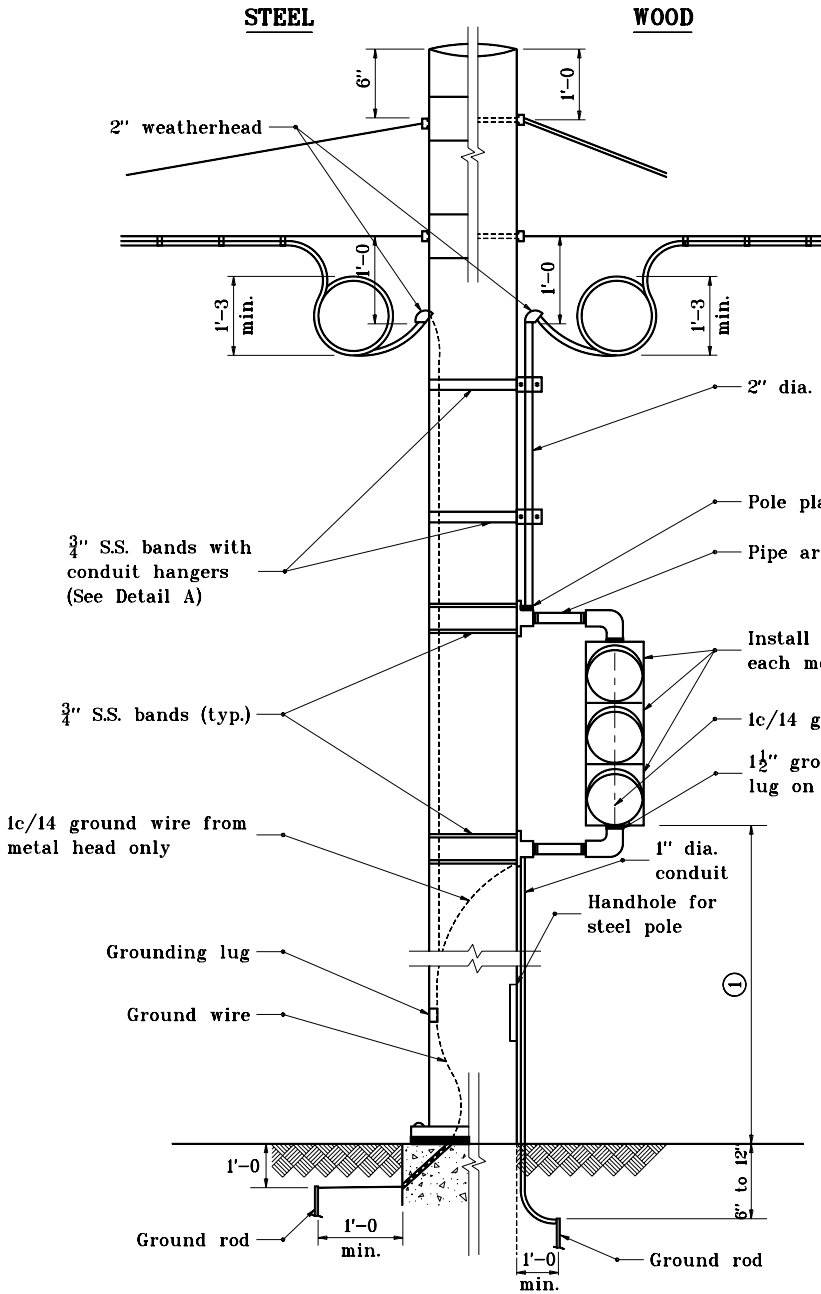

GENERAL NOTES

(1) This distance shall be from 10 ft to 15 ft above centerline of pavement for vehicular signals and from 7 ft to 10 ft above top of sidewalk for pedestrian signals.

(2) Each pedestrian signal and each vehicular signal requires 2 pole plates and 2 pipe arms.

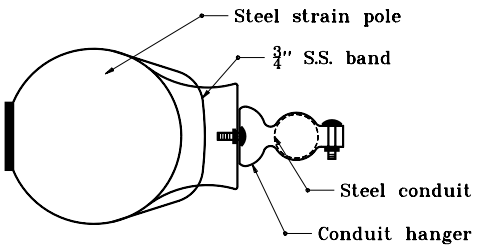

DETAIL A

INDIANA DEPARTMENT OF TRANSPORTATION

SIGNAL INDICATION MOUNTED ON STEEL OR WOOD POLES

SEPTEMBER 1998

STANDARD DRAWING NO. **E 805-SGC0-04**

ANTHONY L. UREMOVICH REGISTERED No. 18095 STATE OF INDIANA PROFESSIONAL ENGINEER

DESIGN STANDARDS ENGINEER

DETAILS PLACED IN THIS FORMAT 11-15-99

/s/ Anthony L. Uremovich 11-15-99
DESIGN STANDARDS ENGINEER DATE

/s/ Firooz Zandi 11-15-99
CHIEF HIGHWAY ENGINEER DATE

ORIGINALLY APPROVED 9-01-98

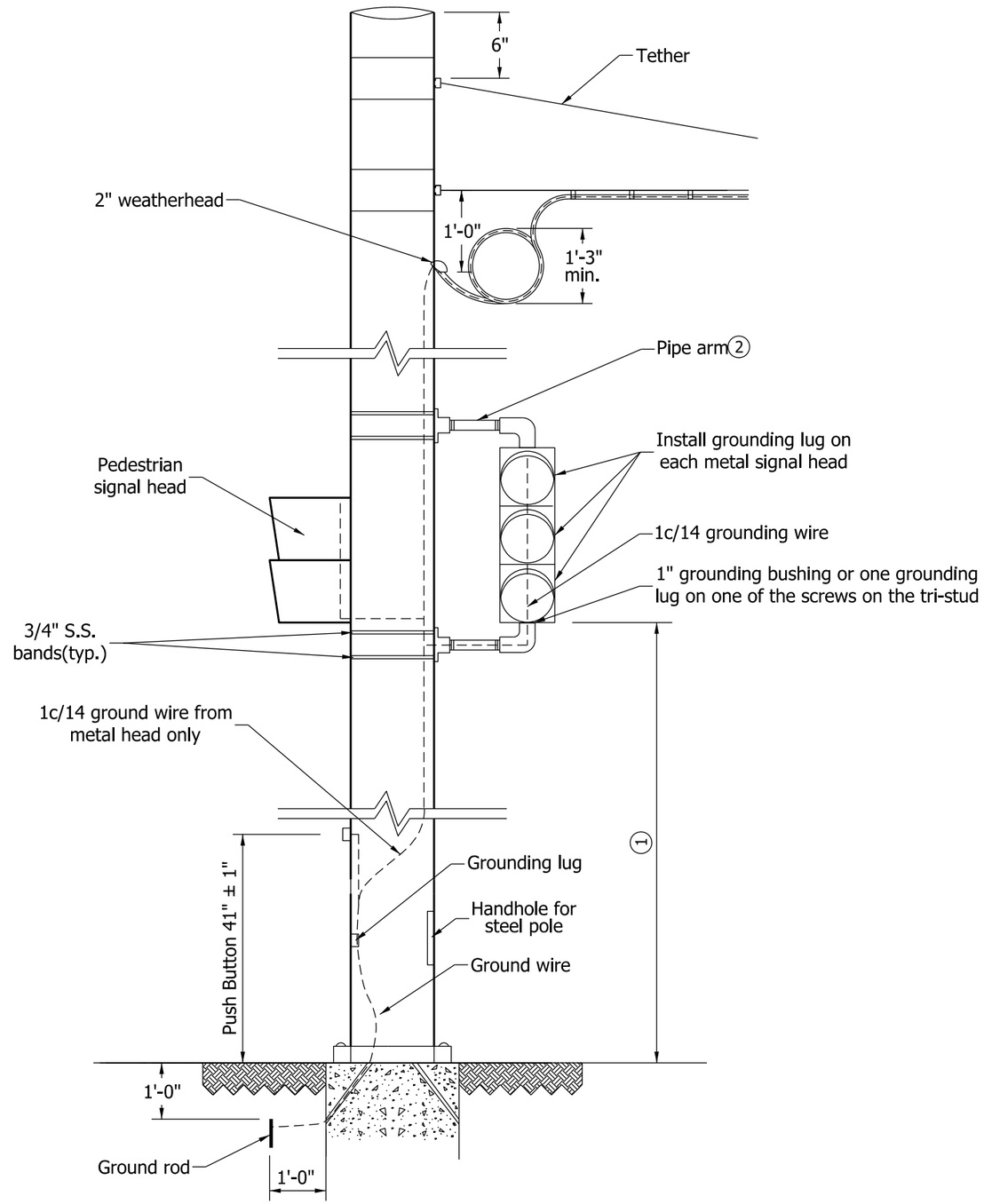

NOTES:

(1) This distance shall be from 10'-0" to 15'-0"above centerline of pavement for vehicular signals and from 7'-0" to 10'-0" above top of sidewalk for pedestrian signals.

(2) Each pedestrian signal and each vehicularsignal requires 2 pole plates and 2 pipe arms.

INDIANA DEPARTMENT OF TRANSPORTATION

SIGNAL INDICATION MOUNTED
ON STEEL POLE

SEPTEMBER 2010

STANDARD DRAWING NO. E 805-SGCO-04A

RICHARD L. VanCLEAVE
REGISTERED
No. 9750
STATE OF INDIANA
PROFESSIONAL ENGINEER

DESIGN STANDARDS ENGINEER

/s/ Richarh L. Vancleave 09/01/10
DESIGN STANDARDS ENGINEER DATE

/s/ Mark A. Miller 09/01/10
CHIEF HIGHWAY ENGINEER DATE

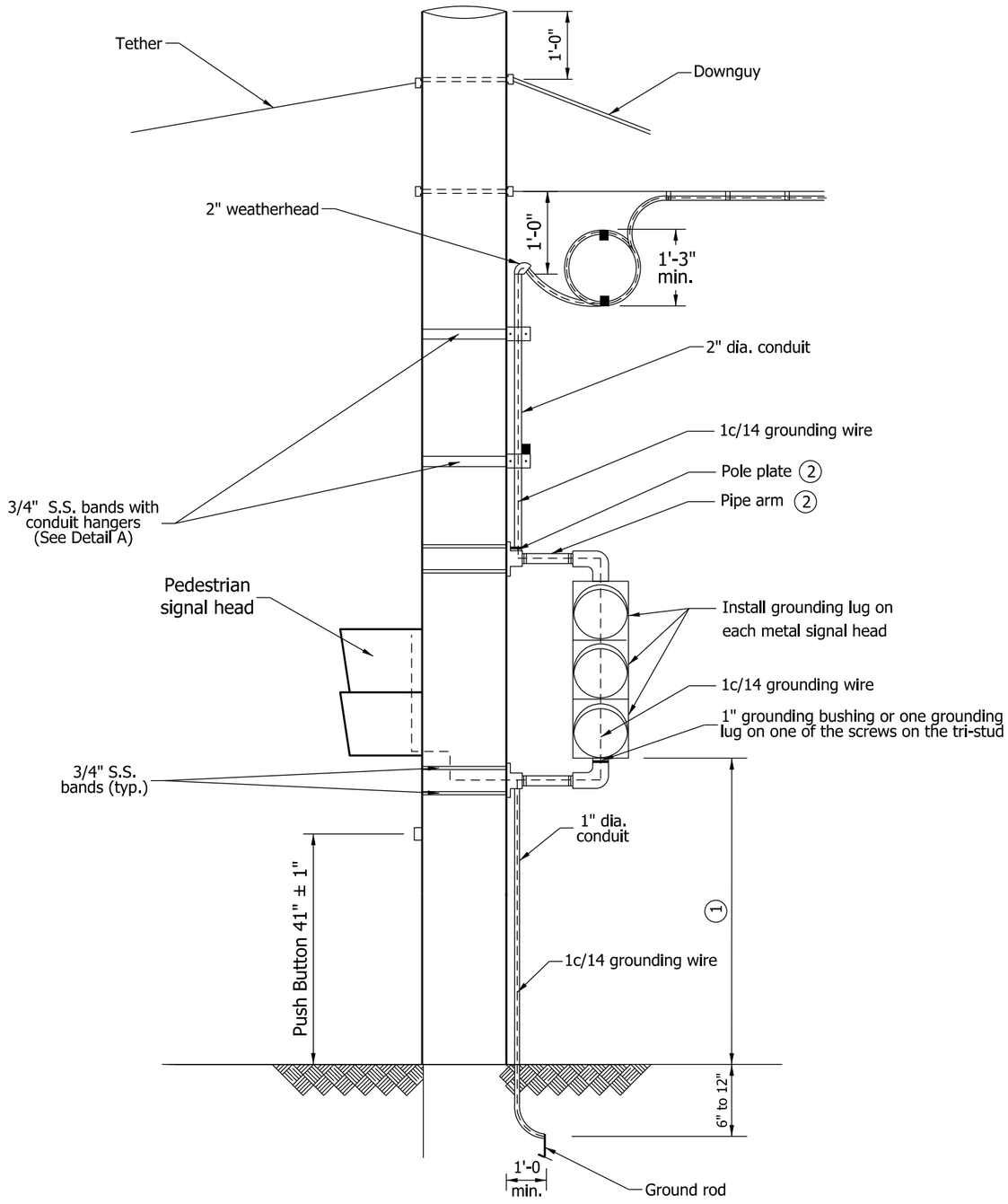

NOTES:

1. This distance shall be from 10'-0" to 15'-0"above centerline of pavement for vehicular signals and from 7'-0" to 10'-0" above top of sidewalk for pedestrian signals.
2. Each pedestrian signal and each vehicularsignal requires 2 pole plates and 2 pipe arms.

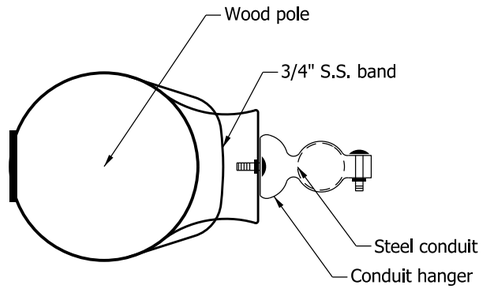

DETAIL A

INDIANA DEPARTMENT OF TRANSPORTATION

SIGNAL INDICATION MOUNTED ON WOOD POLES

SEPTEMBER 2010

STANDARD DRAWING NO. E 805-SGCO-04B

RICHARD L. VanCLEAVE
REGISTERED
No. 9750
STATE OF INDIANA
PROFESSIONAL ENGINEER

DESIGN STANDARDS ENGINEER

/s/ Richarh L. Vancleave 09/01/10
DESIGN STANDARDS ENGINEER DATE

/s/ Mark A. Miller 09/01/10
CHIEF HIGHWAY ENGINEER DATE

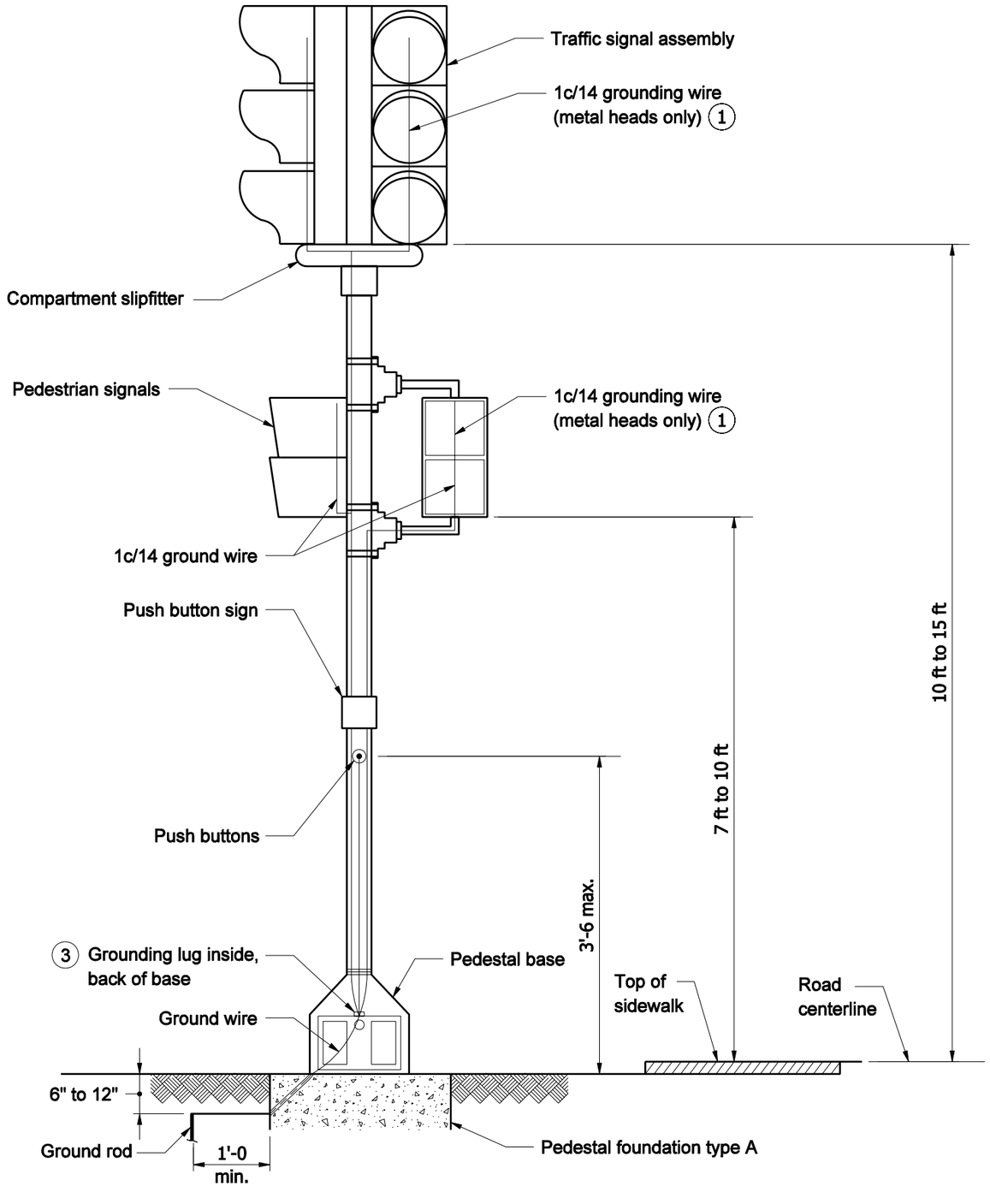

GENERAL NOTES

1. On metal signal heads grounding wire shall connect each signal head and the bottom groundingbushing of the assembly to the grounding lug.
2. Single conductor (hookup) shall be used from slipfitterterminal block to signal indications.
3. See Standard Drawing E 805-SGGR-03 for grounding lug details.

INDIANA DEPARTMENT OF TRANSPORTATION

PEDESTAL MOUNTED SIGNAL INDICATIONS

SEPTEMBER 2007

STANDARD DRAWING NO. E 805-SGCO-05

RICHARD L. VanCLEAVE
REGISTERED
No. 9750
STATE OF INDIANA
PROFESSIONAL ENGINEER

DESIGN STANDARDS ENGINEER

/s/ Richard L. VanCleave 09/04/07
DESIGN STANDARDS ENGINEER DATE

/s/ Mark A. Miller 09/04/07
CHIEF HIGHWAY ENGINEER DATE

GENERAL NOTES

(1) See Standard Drawing E 805-SGGR-03 for grounding lug details.

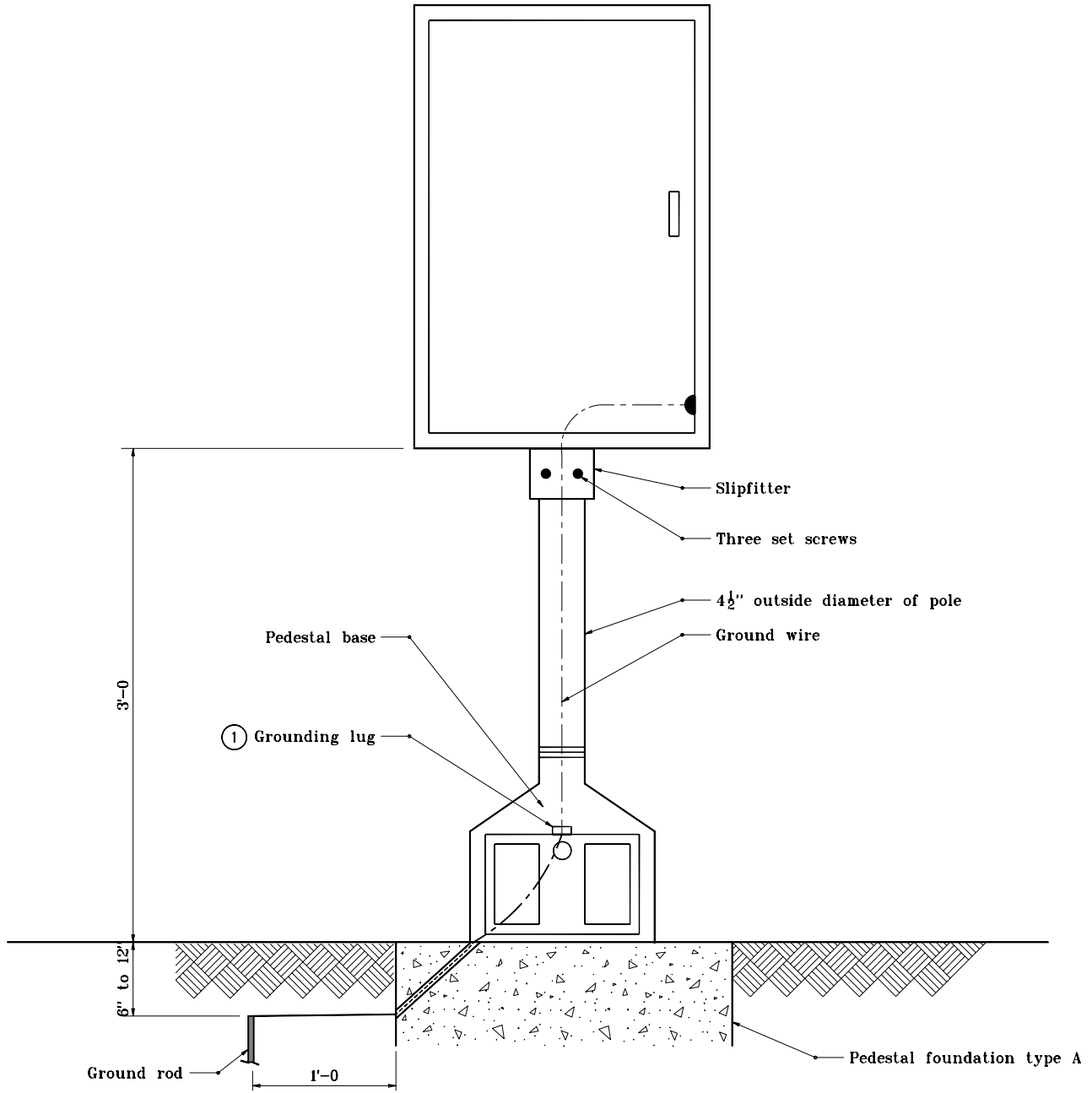

INDIANA DEPARTMENT OF TRANSPORTATION

CONTROLLER CABINET TYPE G ON PEDESTAL

SEPTEMBER 1998

STANDARD DRAWING NO. E 805-SGCO-06

ANTHONY L. UREMOVICH REGISTERED No. 18095 STATE OF INDIANA PROFESSIONAL ENGINEER

DESIGN STANDARDS ENGINEER

DETAILS PLACED IN THIS FORMAT	11-15-99
/s/ Anthony L. Uremovich DESIGN STANDARDS ENGINEER	11-15-99 DATE
/s/ Firooz Zandi CHIEF HIGHWAY ENGINEER	11-15-99 DATE
ORIGINALLY APPROVED	9-01-98

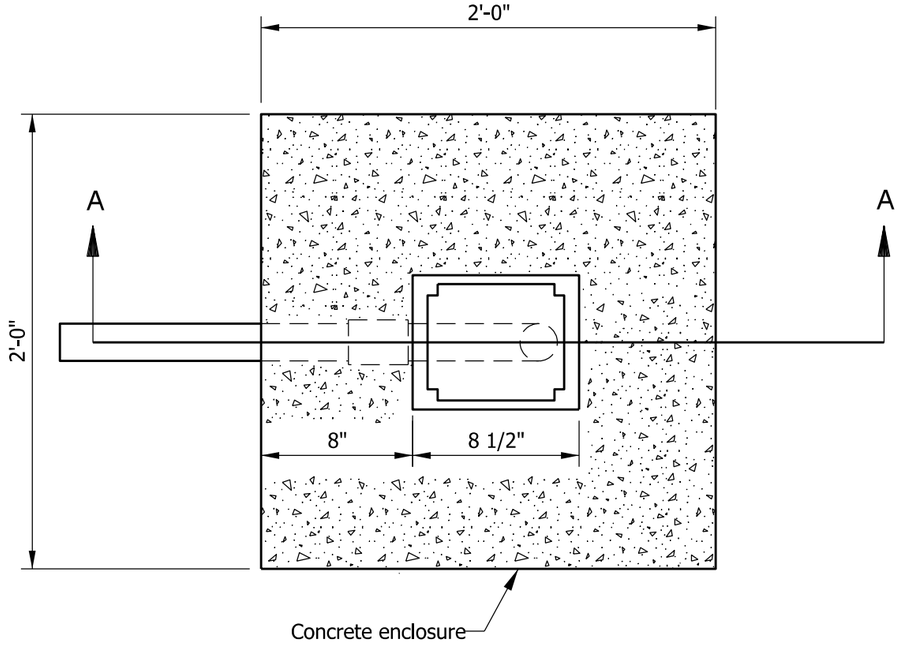

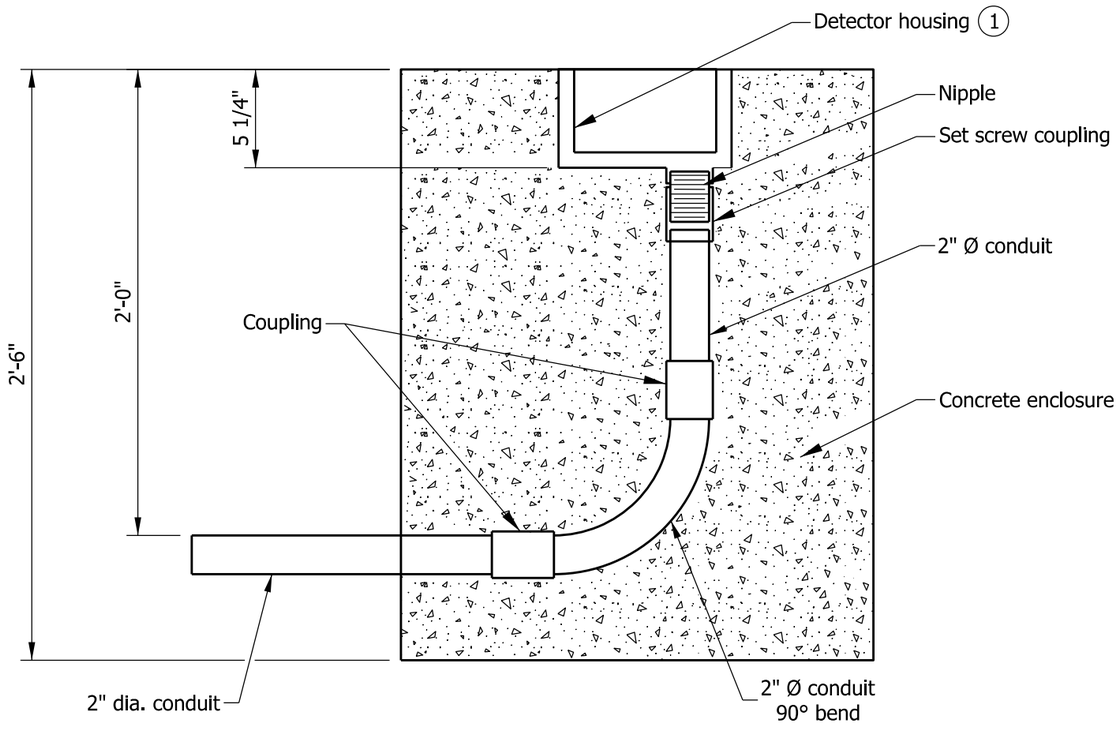

SECTION A-A

NOTE

(1) See Standard Drawing E 805-SGDH-02 for detector housing detail.

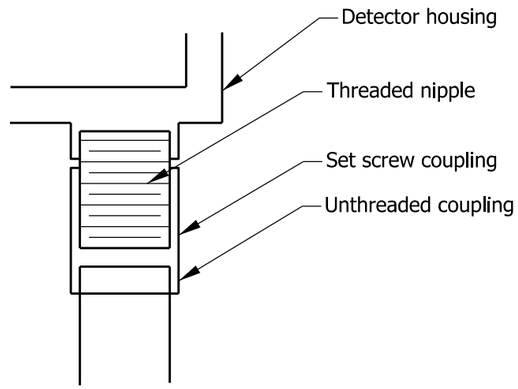

DETECTOR HOUSING
COUPLING DETAIL

INDIANA DEPARTMENT OF TRANSPORTATION

INSTALLATION DETAIL
DETECTOR HOUSING

SEPTEMBER 2012

STANDARD DRAWING NO. E 805-SGDH-01

RICHARD L. VanCLEAVE
REGISTERED
No. 9750
STATE OF INDIANA
PROFESSIONAL ENGINEER

/s/ Richard L. VanCleave 09/04/12
SUPERVISOR, ROADWAY STANDARDS DATE

/s/ Mark A. Miller 09/04/12
CHIEF ENGINEER DATE

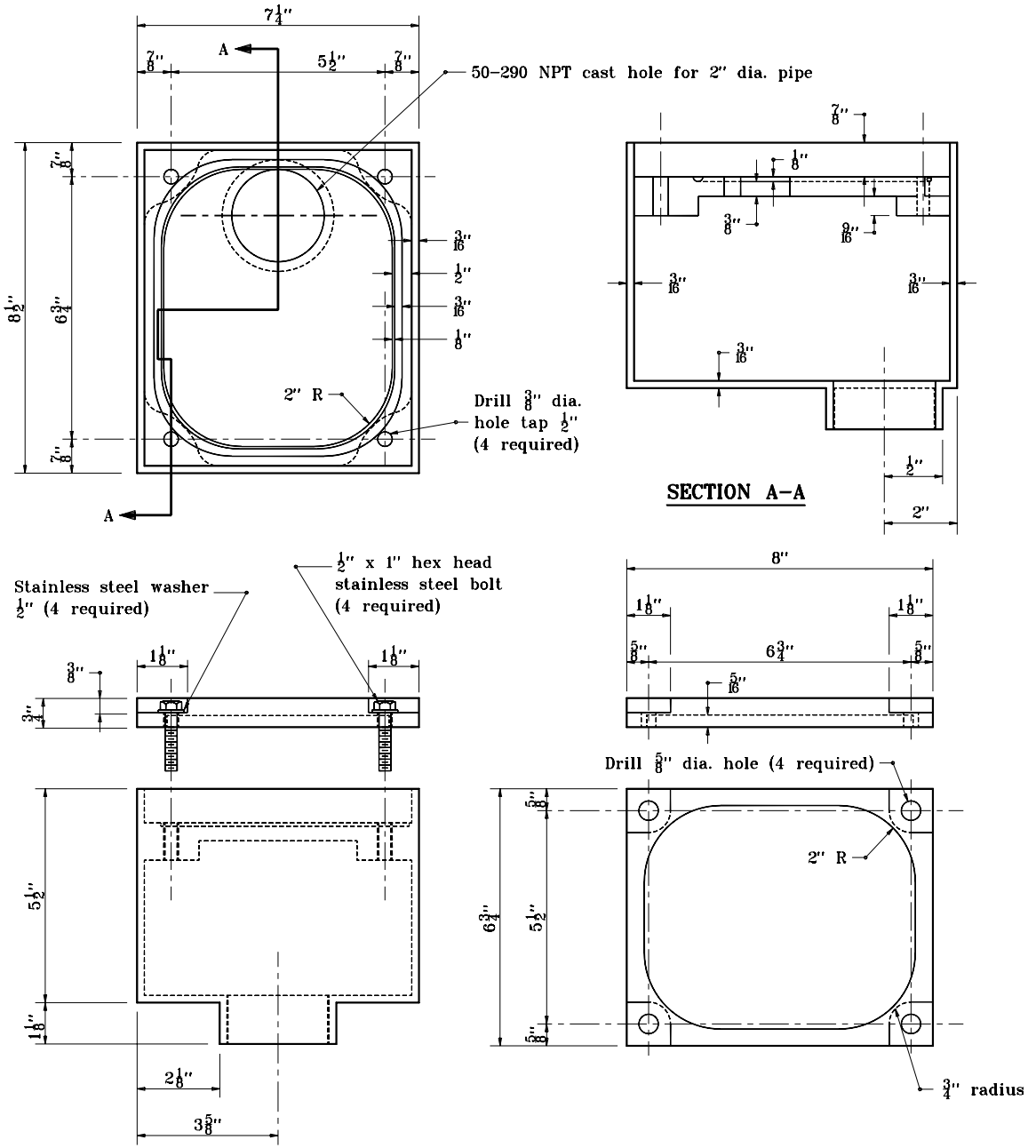

INDIANA DEPARTMENT OF TRANSPORTATION

DETAIL OF DETECTOR HOUSING

MAY 1998

STANDARD DRAWING NO. **E 805-SGDH-02**

ANTHONY L. UREMOVICH REGISTERED No. 18095 STATE OF INDIANA PROFESSIONAL ENGINEER

DESIGN STANDARDS ENGINEER

DETAILS PLACED IN THIS FORMAT	11-15-99
/s/ Anthony L. Uremovich	11-15-99
DESIGN STANDARDS ENGINEER	DATE
/s/ Firooz Zandi	11-15-99
CHIEF HIGHWAY ENGINEER	DATE
ORIGINALLY APPROVED	5-01-98

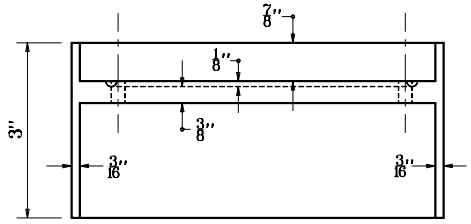

CROSS SECTION OF HOUSING ADAPTOR

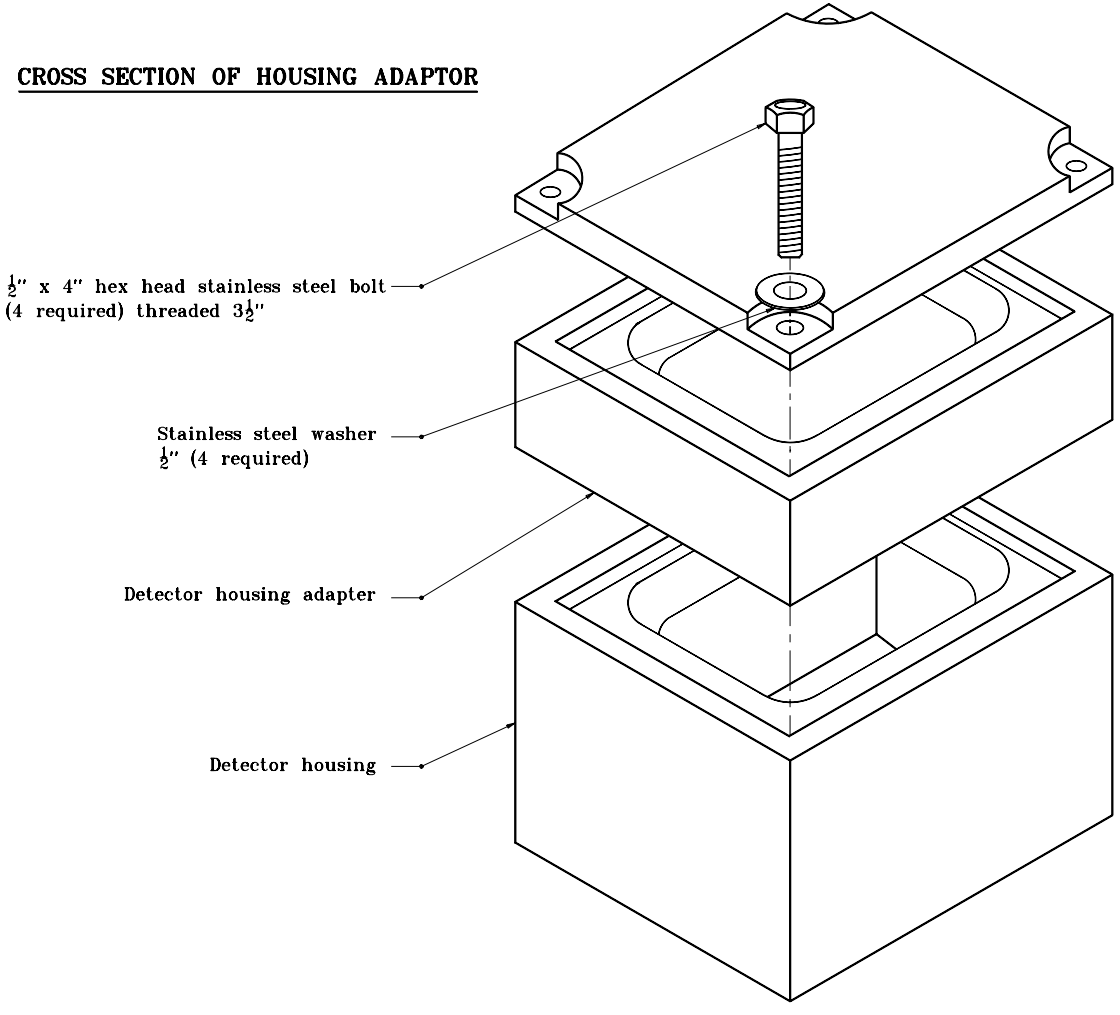

INDIANA DEPARTMENT OF TRANSPORTATION

DETAILS OF DETECTOR HOUSING ADAPTER

MARCH 1995

STANDARD DRAWING NO. **E 805-SGDH-03**

ANTHONY L. UREMOVICH REGISTERED No. 18095 STATE OF INDIANA PROFESSIONAL ENGINEER

DESIGN STANDARDS ENGINEER

DETAILS PLACED IN THIS FORMAT 11-15-99

/s/ Anthony L. Uremovich 11-15-99
DESIGN STANDARDS ENGINEER DATE

/s/ Firooz Zandi 11-15-99
CHIEF HIGHWAY ENGINEER DATE

ORIGINALLY APPROVED 3-01-95

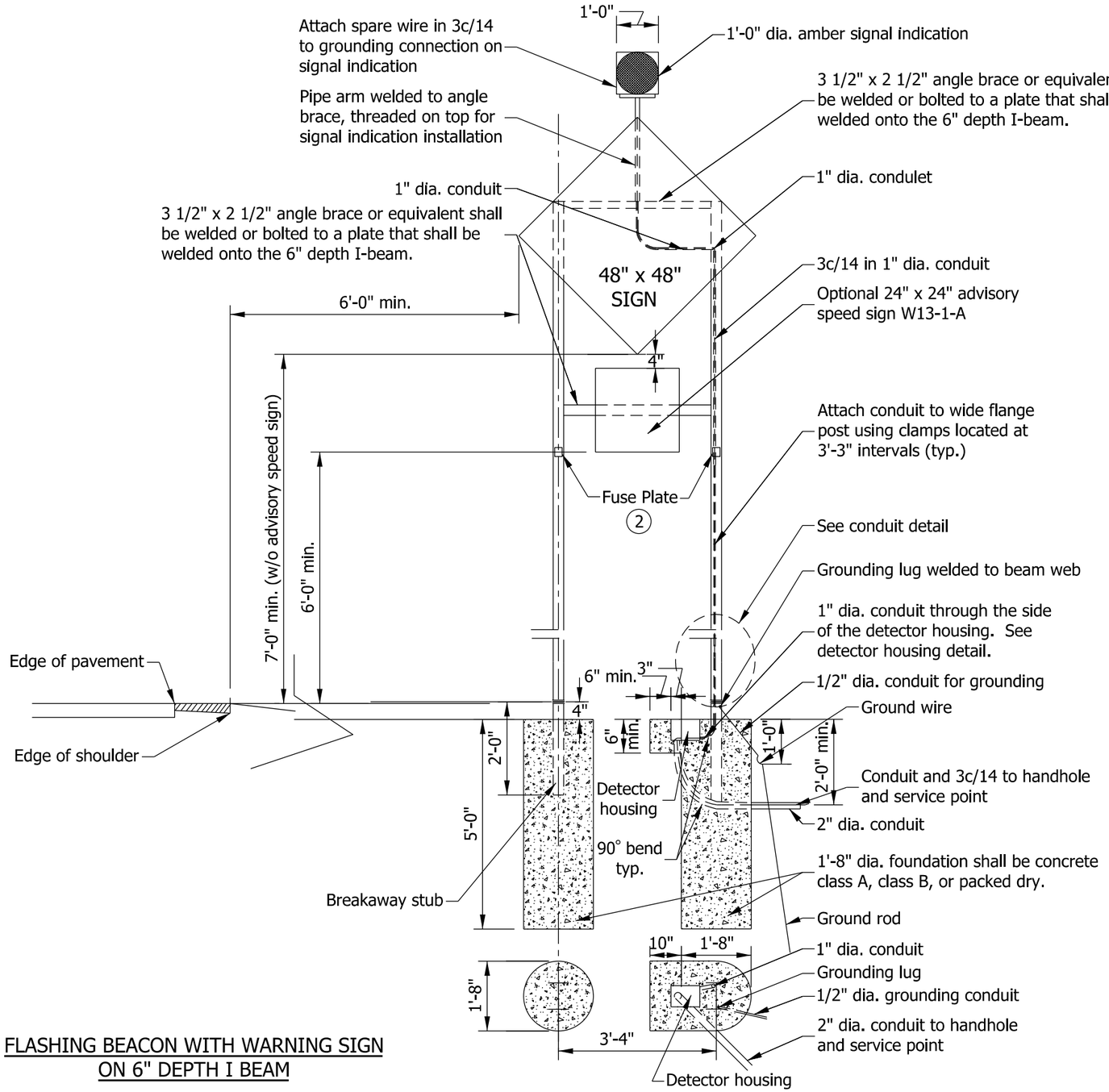

FLASHING BEACON WITH WARNING SIGN
ON 6" DEPTH I BEAM

NOTES

1. See Standard Drawing E 802-SNGP-01 through 10 for breakaway details and dimensions. Use post size W 6 x 9.
2. The fuse plate shall be 6 in. below the lowest fastener of the sign.
3. See Standard Drawing E 805-SGFB-01A for conduit and detector housing details.

INDIANA DEPARTMENT OF TRANSPORTATION

FLASHING BEACON
WITH WARNING SIGN

SEPTEMBER 2012

STANDARD DRAWING NO. E 805-SGFB-01

RICHARD L. VanCLEAVE
REGISTERED
No. 9750
STATE OF INDIANA
PROFESSIONAL ENGINEER

/s/ Richard L. VanCleave 09/04/12
SUPERVISOR, ROADWAY STANDARDS DATE

/s/ Mark A. Miller 09/04/12
CHIEF ENGINEER DATE

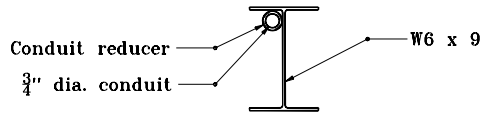

SECTION A-A

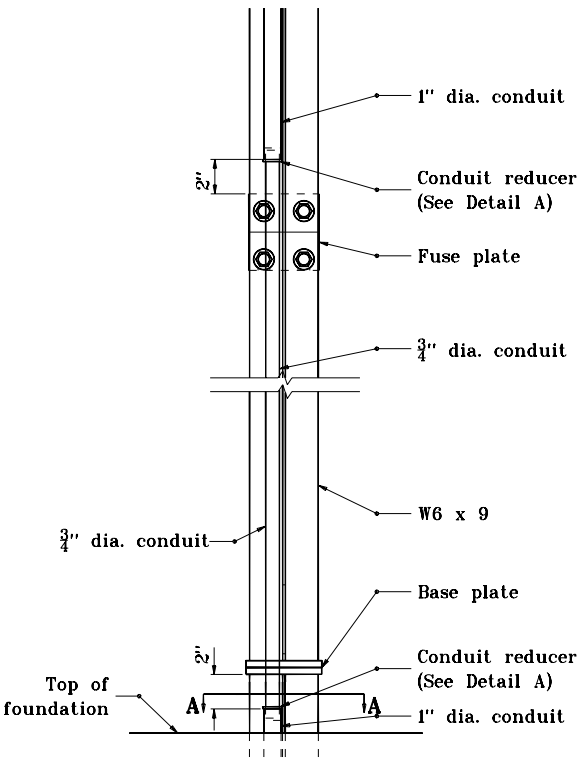

CONDUIT DETAIL

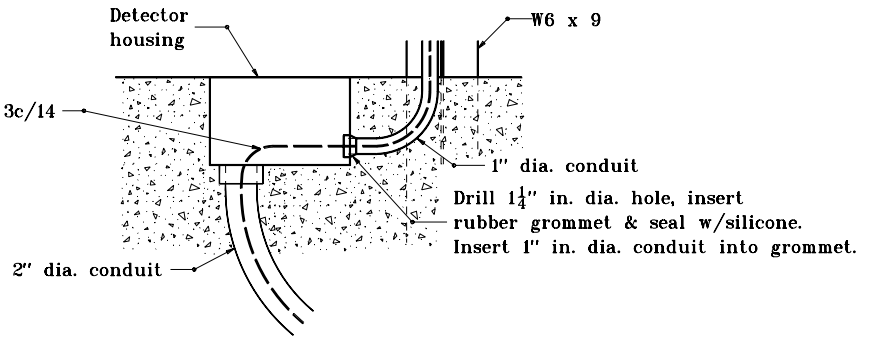

DETECTOR HOUSING DETAIL

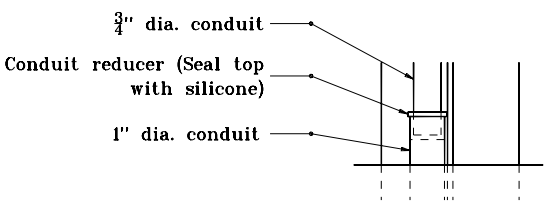

DETAIL A
(INVERT FOR TOP CONDUIT JOINT)

INDIANA DEPARTMENT OF TRANSPORTATION

FLASHING BEACON WITH WARNING SIGN DETAILS

SEPTEMBER 1998

STANDARD DRAWING NO **E 805-SGFB-01A**

ANTHONY L. UREMOVICH REGISTERED No. 18095 STATE OF INDIANA PROFESSIONAL ENGINEER

DESIGN STANDARDS ENGINEER

DETAILS PLACED IN THIS FORMAT 11-15-99

/s/ Anthony L. Uremovich 11-15-99
DESIGN STANDARDS ENGINEER DATE

/s/ Firooz Zandi 11-15-99
CHIEF HIGHWAY ENGINEER DATE

ORIGINALLY APPROVED 9-01-98

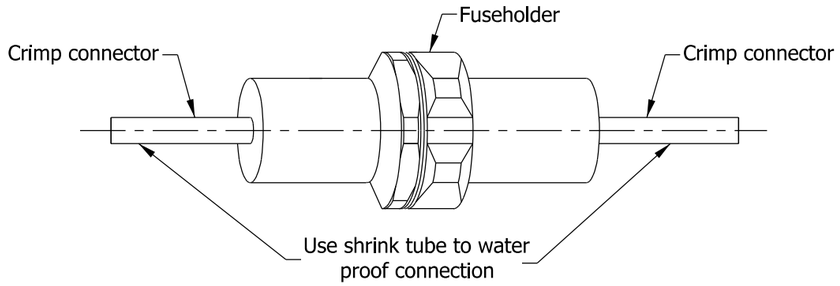

DISCONNECT CONNECTOR KIT
TO BE USED IN DETECTOR HOUSING

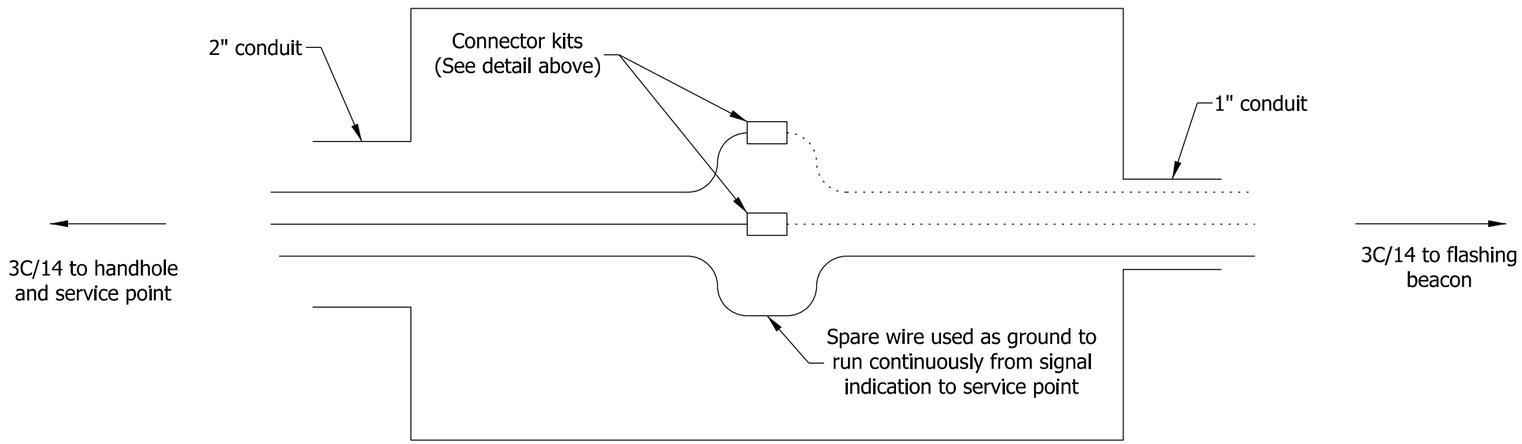

DETECTOR HOUSING CONNECTIONS DETAIL

SINGLE LANE ROADWAY

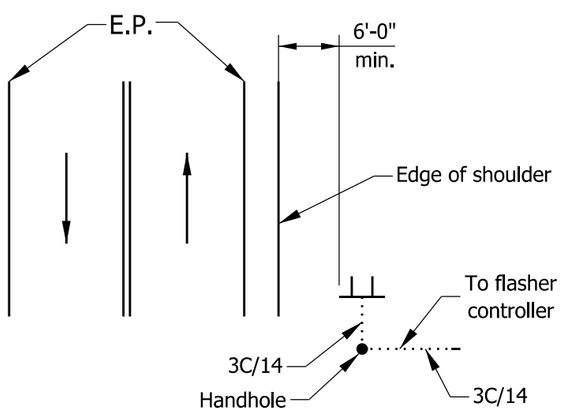

MULTI-LANE ROADWAY

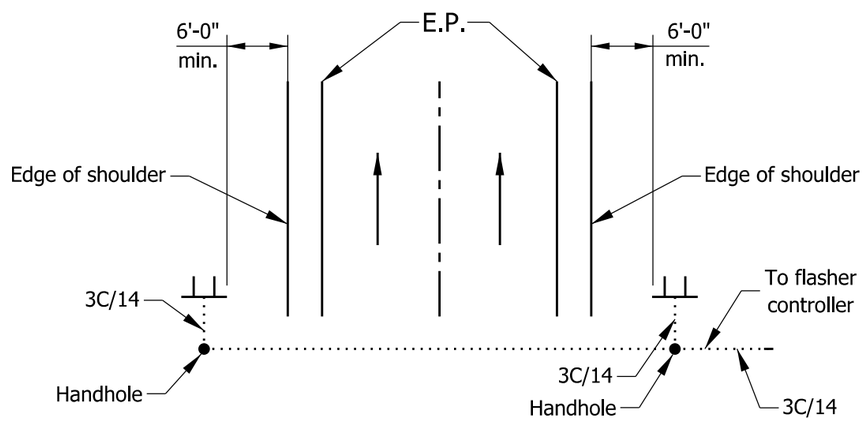

TYPICAL FLASHING BEACON CONFIGURATION

INDIANA DEPARTMENT OF TRANSPORTATION

FLASHING BEACON WITH
WARNING SIGN DETAILS

SEPTEMBER 2012

STANDARD DRAWING NO. E 805-SGFB-02

RICHARD L. VanCLEAVE
REGISTERED
No. 9750
STATE OF
INDIANA
PROFESSIONAL ENGINEER

/s/ Richard L. VanCleave 09/04/12
SUPERVISOR, ROADWAY STANDARDS DATE

/s/ Mark A. Miller 09/04/12
CHIEF ENGINEER DATE

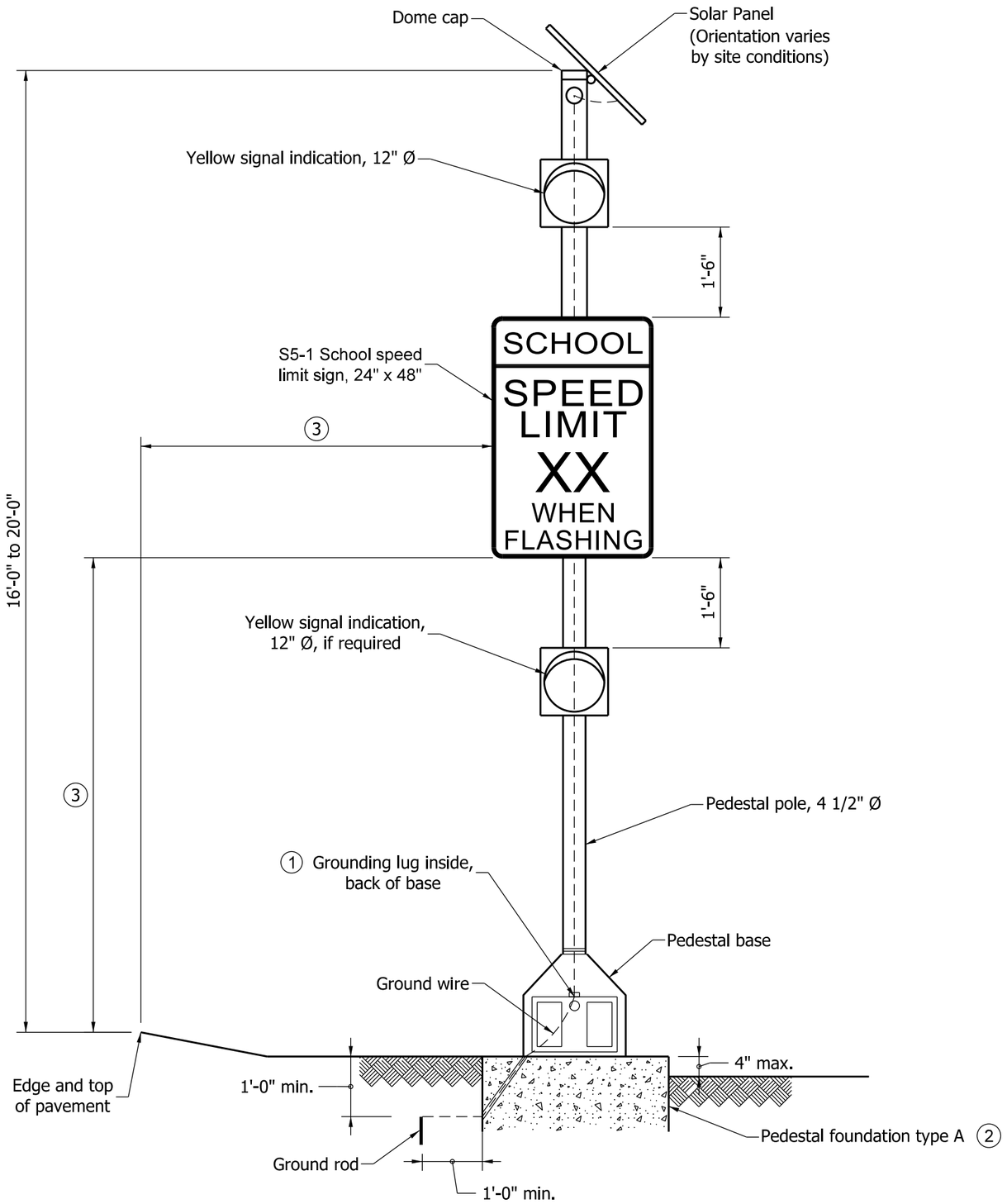

FRONT VIEW

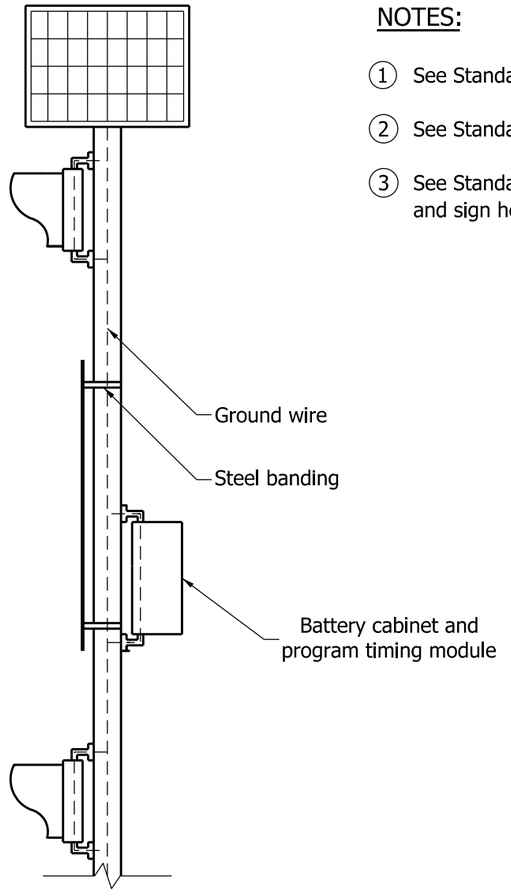

SIDE VIEW

NOTES:

1. See Standard Drawing E 805-SGGR-03 for grounding lug details.
2. See Standard Drawing E 805-SGCF-03 for type A foundation details.
3. See Standard Drawing E 802-SNPL-02 for edge of pavement offset and sign height.

INDIANA DEPARTMENT OF TRANSPORTATION

PEDESTAL MOUNTED SOLAR POWERED SCHOOL SPEED LIMIT FLASHING BEACON ASSEMBLY

SEPTEMBER 2010

STANDARD DRAWING NO. E 805-SGFB-03

RICHARD L. VanCLEAVE
REGISTERED
No. 9750
STATE OF INDIANA
PROFESSIONAL ENGINEER

DESIGN STANDARDS ENGINEER

/s/ Richard L. VanCleave 09/01/10
DESIGN STANDARDS ENGINEER DATE

/s/ Mark A. Miller 09/01/10
CHIEF HIGHWAY ENGINEER DATE

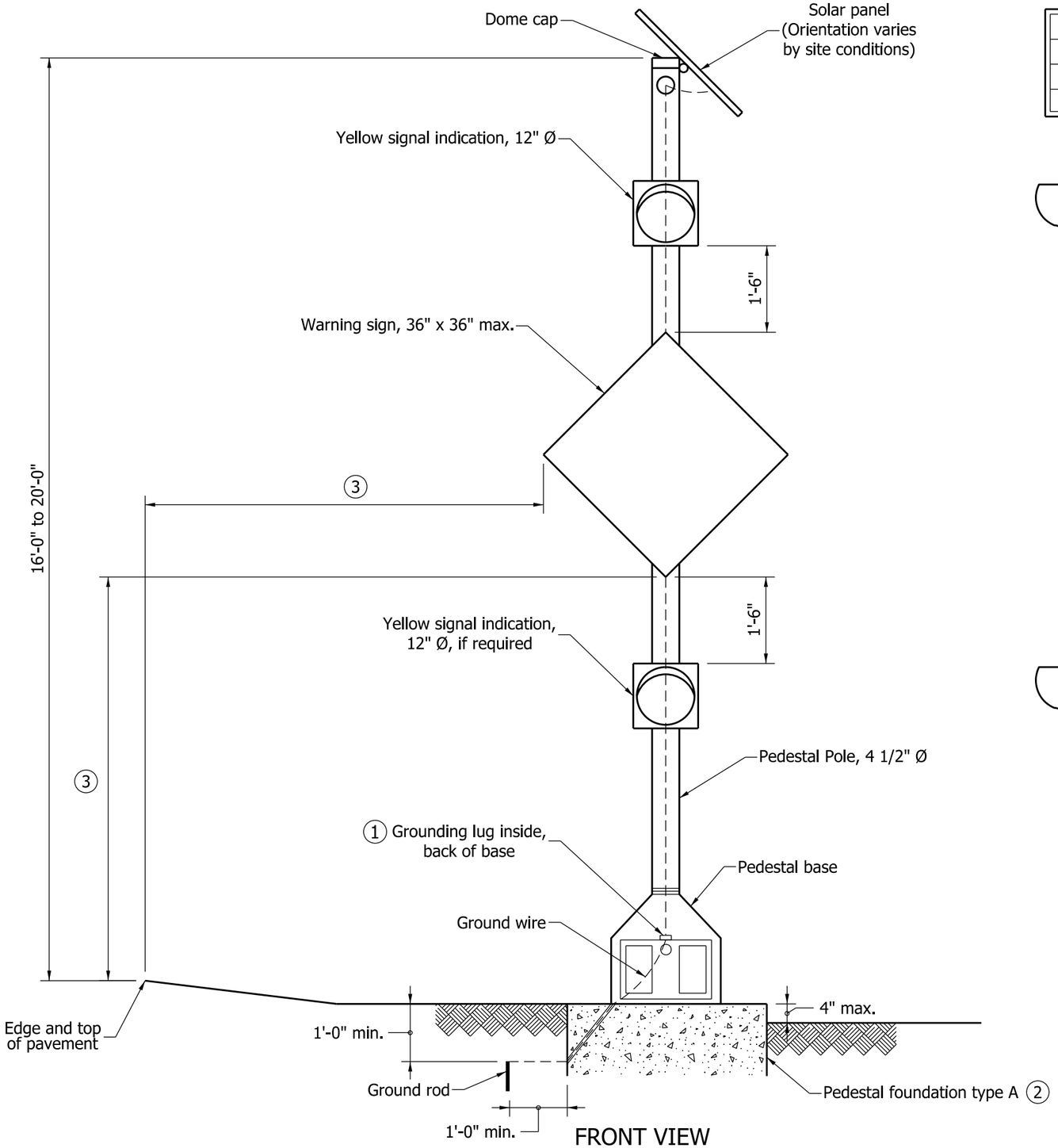

FRONT VIEW

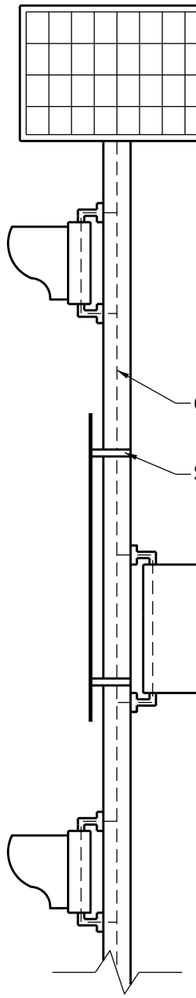

SIDE VIEW

NOTES:

1. See Standard Drawing E 805-SGGR-03 for grounding lug details.
2. See Standard Drawing E 805-SGCF-03 for type A foundation details.
3. See Standard Drawing E 802-SNPL-02 for edge of pavement offset and sign height.

INDIANA DEPARTMENT OF TRANSPORTATION

PEDESTAL MOUNTED SOLAR POWERED WARNING SIGN FLASHING BEACON ASSEMBLY

SEPTEMBER 2010

STANDARD DRAWING NO. E 805-SGFB-04

RICHARD L. VanCLEAVE REGISTERED No. 9750 STATE OF INDIANA PROFESSIONAL ENGINEER

DESIGN STANDARDS ENGINEER

/s/ Richard L. VanCleave 09/01/10
DESIGN STANDARDS ENGINEER DATE

/s/ Mark A. Miller 09/01/10
CHIEF HIGHWAY ENGINEER DATE

GENERAL NOTES

(A) ½" preformed joint

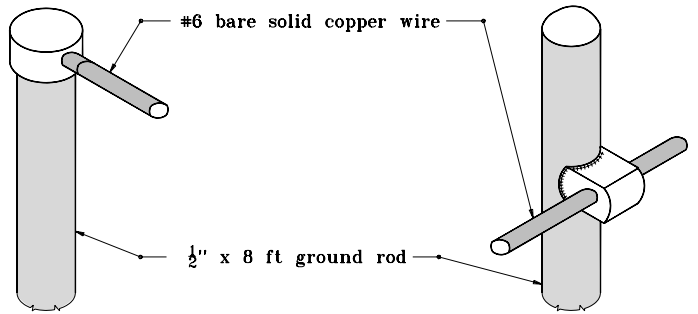

TOP CONNECTION

SIDE CONNECTION

THERMO WELD

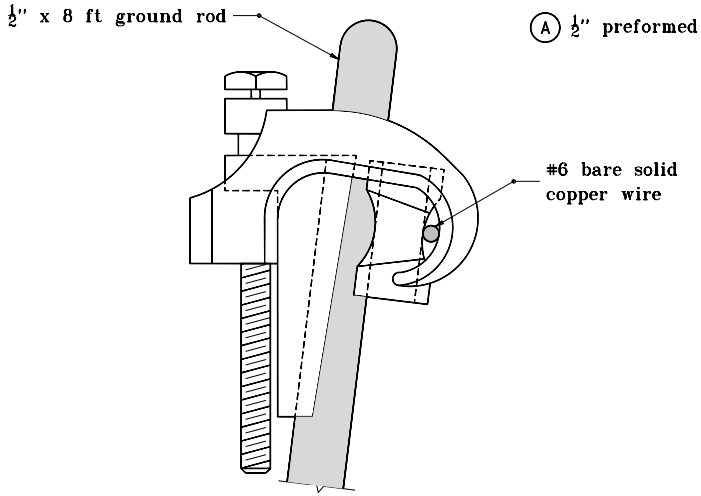

GROUNDING GRID

GROUND ROD CONNECTIONS

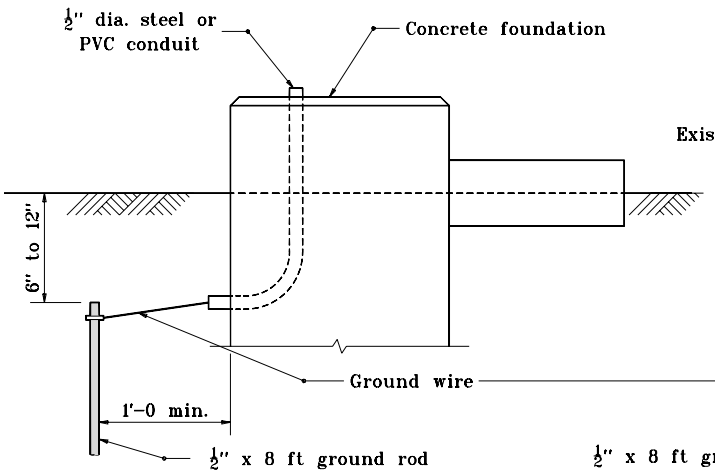

TYPICAL DETAIL
GROUND ROD IN EARTH

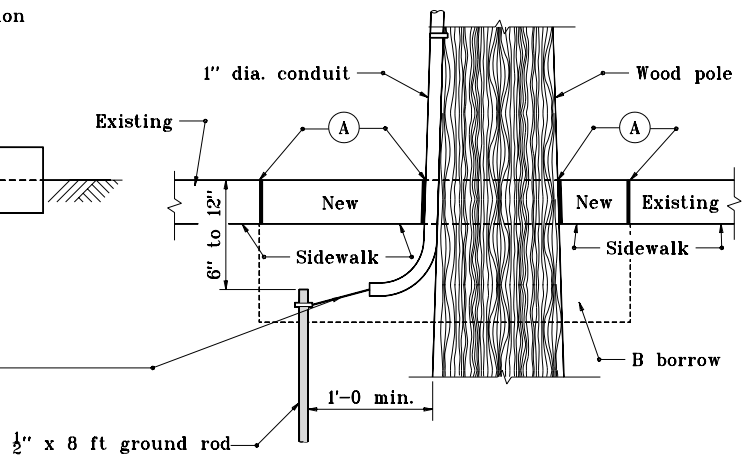

TYPICAL DETAIL
GROUND ROD IN SIDEWALK

INDIANA DEPARTMENT OF TRANSPORTATION

GROUND ROD

SEPTEMBER 1998

STANDARD DRAWING NO. E 805-SGGR-01

ANTHONY L. UREMOVICH REGISTERED No. 18095 STATE OF INDIANA PROFESSIONAL ENGINEER

DESIGN STANDARDS ENGINEER

DETAILS PLACED IN THIS FORMAT	11-15-99
/s/ Anthony L. Uremovich, DESIGN STANDARDS ENGINEER	11-15-99
/s/ Firooz Zandi, CHIEF HIGHWAY ENGINEER	11-15-99
ORIGINALLY APPROVED	9-01-98

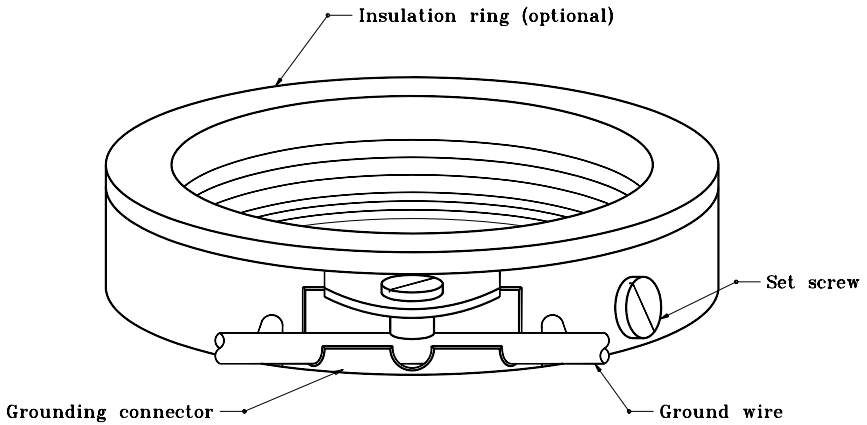

INDIANA DEPARTMENT OF TRANSPORTATION

THREADED GROUNDING BUSHING

SEPTEMBER 1998

STANDARD DRAWING NO. **E 805-SGGR-02**

ANTHONY L. UREMOVICH REGISTERED No. 18095 STATE OF INDIANA PROFESSIONAL ENGINEER

DESIGN STANDARDS ENGINEER

DETAILS PLACED IN THIS FORMAT	11-15-99
/s/ Anthony L. Uremovich	11-15-99
DESIGN STANDARDS ENGINEER	DATE
/s/ Firooz Zandi	11-15-99
CHIEF HIGHWAY ENGINEER	DATE
ORIGINALLY APPROVED	9-01-98

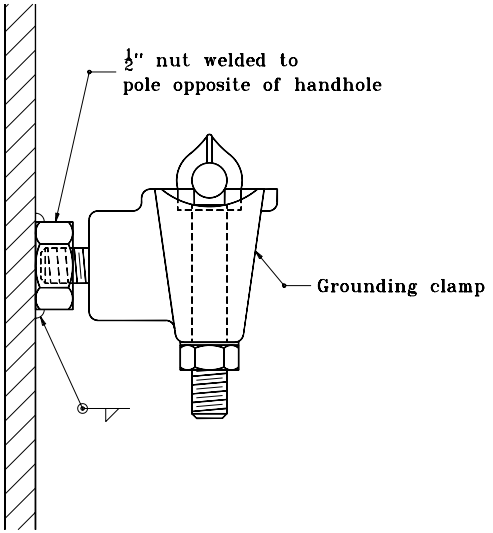

ALUMINUM POLES

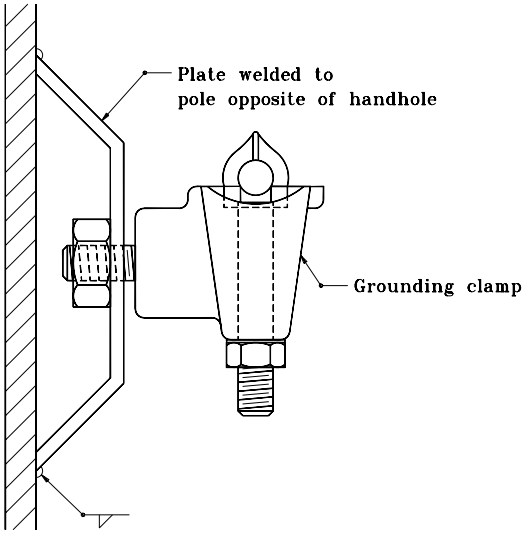

STEEL POLES

GROUNDING POST DETAIL

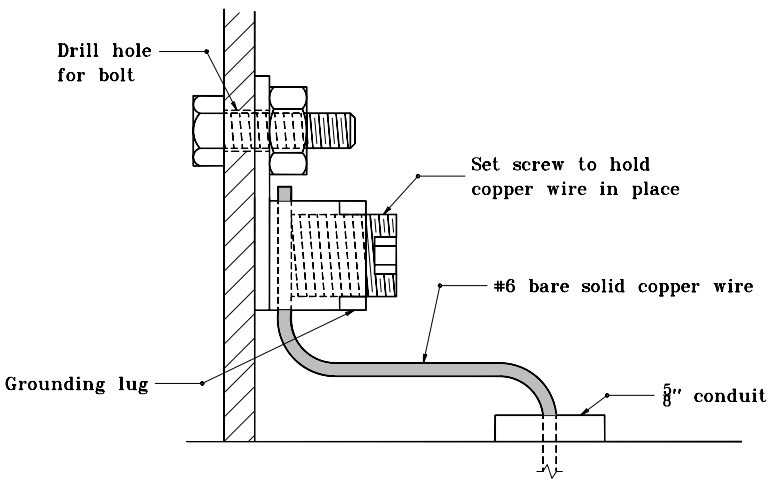

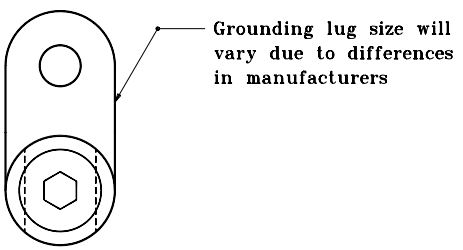

GROUNDING LUG DETAIL
(FIELD CONNECTION)

INDIANA DEPARTMENT OF TRANSPORTATION

GROUNDING DETAILS

MARCH 1995

STANDARD DRAWING NO. **E 805-SGGR-03**

ANTHONY L. UREMOVICH REGISTERED No. 18095 STATE OF INDIANA PROFESSIONAL ENGINEER

DESIGN STANDARDS ENGINEER

DETAILS PLACED IN THIS FORMAT	11-15-99
/s/ Anthony L. Uremovich DESIGN STANDARDS ENGINEER	11-15-99 DATE
/s/ Firooz Zandi CHIEF HIGHWAY ENGINEER	11-15-99 DATE
ORIGINALLY APPROVED	3-01-95

TYPICAL LOOP DETECTION SAW-CUT PLAN (ONE LANE)

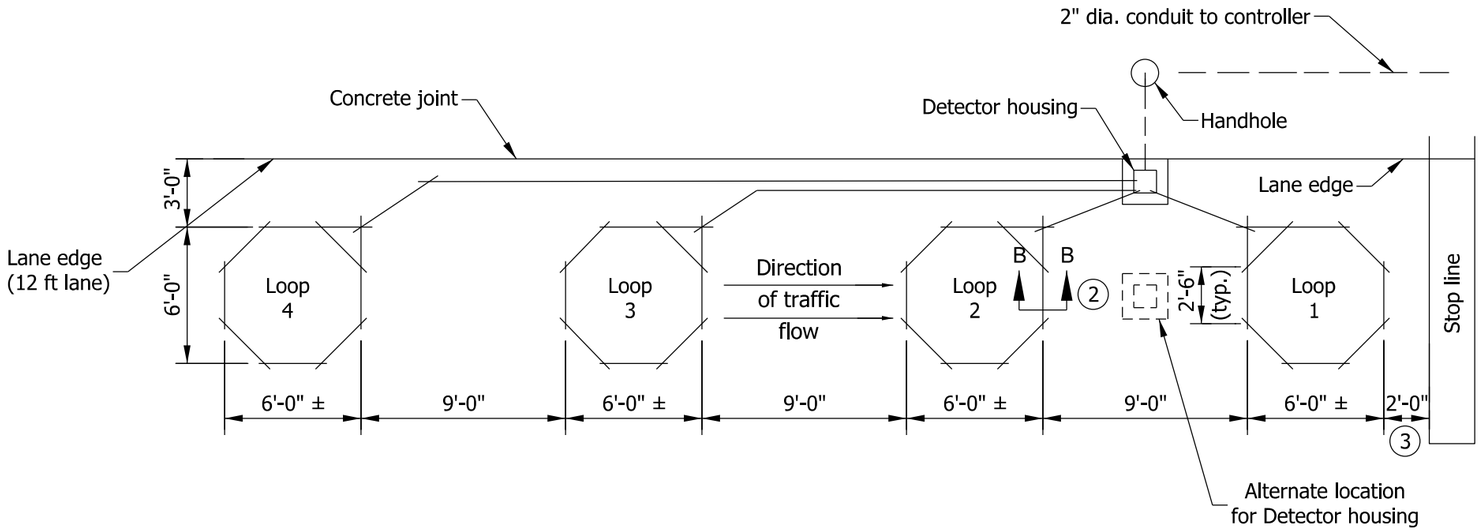

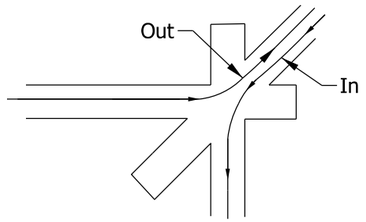

TYPICAL LOOP DETECTION (TWO LANES)

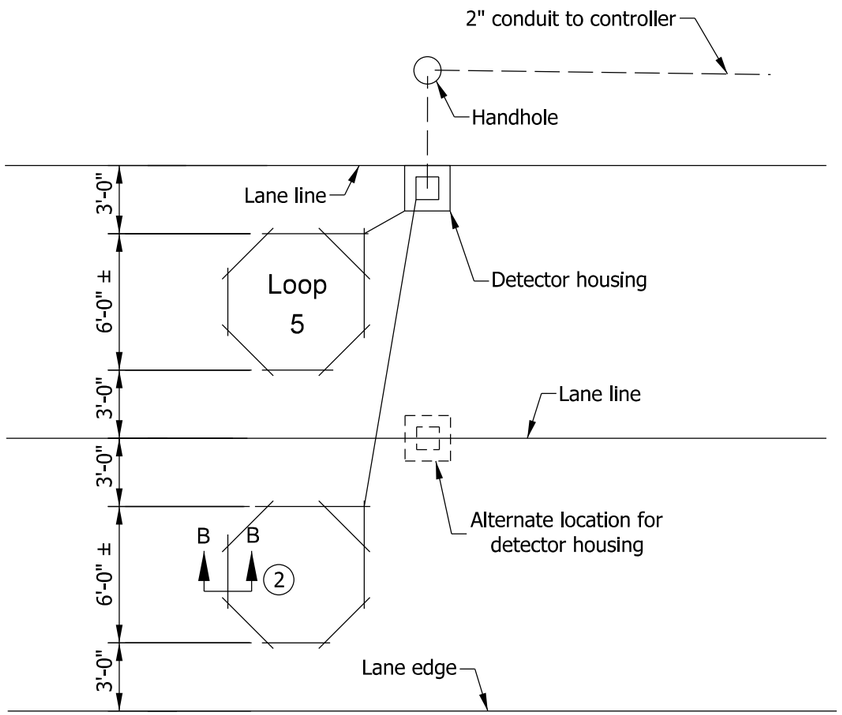

NOTES

1. Loop saw-cuts as shown on plan sheets are to be considered as schematic only. In the event of discrepancies, this detail shall govern.

(2) See Standard Drawing E 805-SGLI-02 for Section B-B.

(3) This distance is typical depending on the intersection geometrics; a loop can be sawed in front of the stop line.

INDIANA DEPARTMENT OF TRANSPORTATION

TRAFFIC SIGNAL
LOOP INSTALLATION

SEPTEMBER 2012

STANDARD DRAWING NO. E 805-SGLI-01

RICHARD L. VanCLEAVE REGISTERED No. 9750 STATE OF INDIANA PROFESSIONAL ENGINEER

/s/ Richard L. VanCleave 09/04/12
SUPERVISOR, ROADWAY STANDARDS DATE

/s/ Mark A. Miller 09/04/12
CHIEF ENGINEER DATE

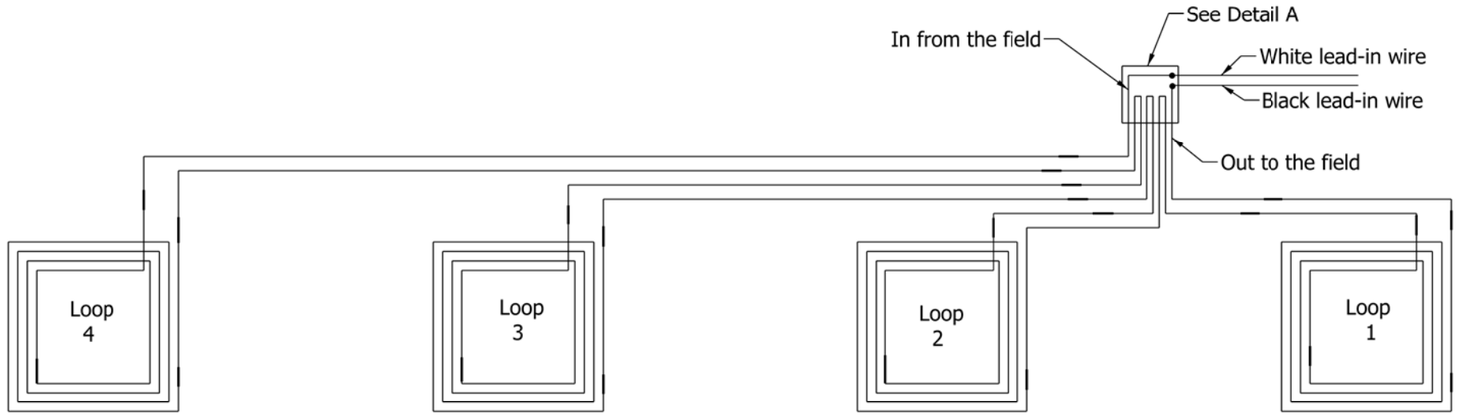

LOOP WIRING DIAGRAM

NOTES:

1. Duct loop wires to be twisted around each other a minimum of 5 turns/ft then coiled and tied with self-locking strips.
2. Loop wires to be tagged in or out as indicated.
3. See splice detail (waterproofing) on Standard Drawing E 805-SGLI-04.
4. The loop wire is continuously wound in the loop saw slot for the required number of turns.

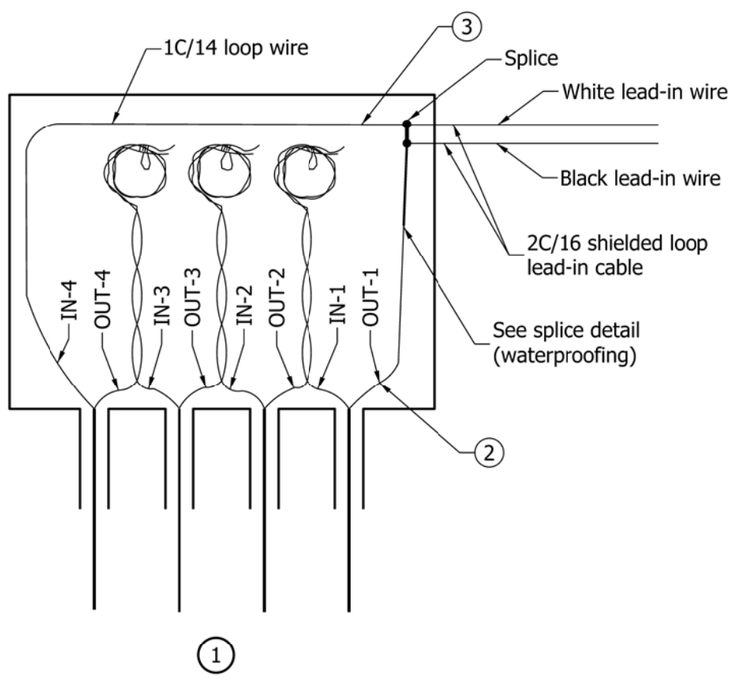

DETAIL A
DETECTOR HOUSING WIRING

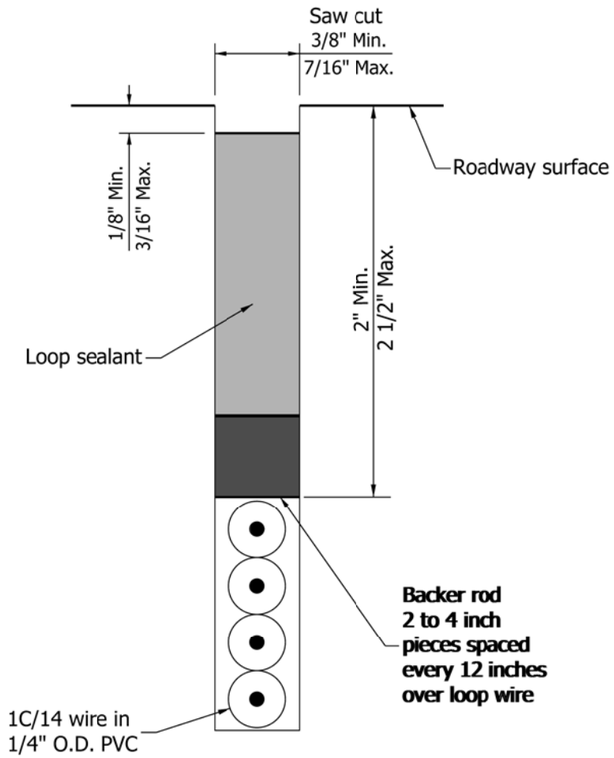

LOOP SAW-CUT DETAIL
SECTION B-B

INDIANA DEPARTMENT OF TRANSPORTATION

TRAFFIC SIGNAL
LOOP INSTALLATION

SEPTEMBER 2010

STANDARD DRAWING NO. E 805-SGLI-02

RICHARD L. VanCLEAVE
REGISTERED
No. 9750
STATE OF INDIANA
PROFESSIONAL ENGINEER

DESIGN STANDARDS ENGINEER

/s/ Richarh L. Vancleave 09/01/10
DESIGN STANDARDS ENGINEER DATE

/s/ Mark A. Miller 09/01/10
CHEIF HIGHWAY ENGINEER DATE

GENERAL NOTES

(1) For detail, see Standard Drawing No. E 805-SGDH-01.

(2) For detail, see Standard Drawing No. E 805-SGDH-02

(3) For detail, see Standard Drawing No. E 805-SGLI-04.

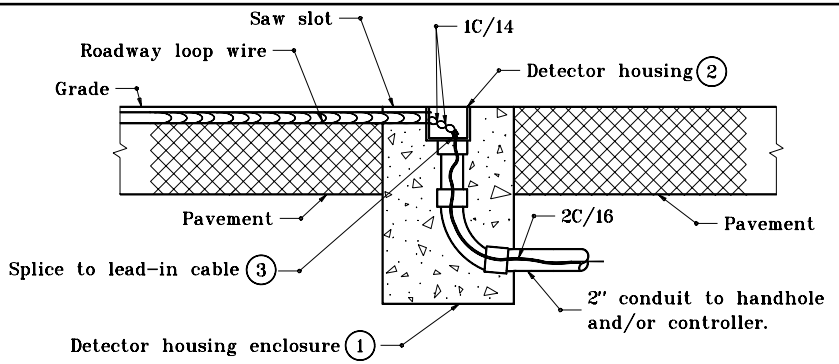

CROSS SECTION FOR NON-CURBED SECTIONS

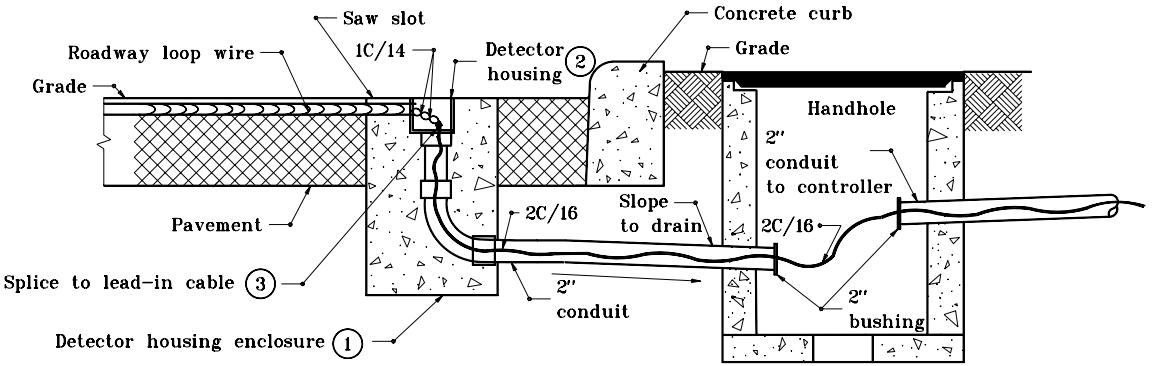

CROSS SECTION FOR CONCRETE CURB SECTIONS

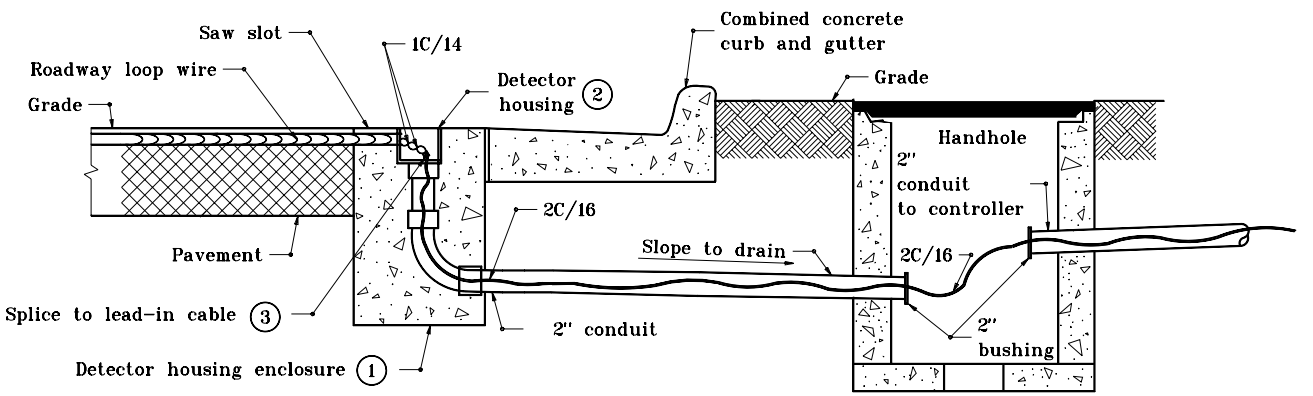

CROSS SECTION FOR COMBINED CURB & GUTTER SECTIONS

INDIANA DEPARTMENT OF TRANSPORTATION

TRAFFIC SIGNAL LOOP DETECTOR HOUSING INSTALLATION

MARCH 1995

STANDARD DRAWING NO. **E 805-SGLI-03**

ANTHONY L. UREMOVICH REGISTERED No. 18095 STATE OF INDIANA PROFESSIONAL ENGINEER

DESIGN STANDARDS ENGINEER

DETAILS PLACED IN THIS FORMAT	11-15-99
/s/ Anthony L. Uremovich DESIGN STANDARDS ENGINEER	11-15-99 DATE
/s/ Firooz Zandi CHIEF HIGHWAY ENGINEER	11-15-99 DATE
ORIGINALLY APPROVED	3-01-95

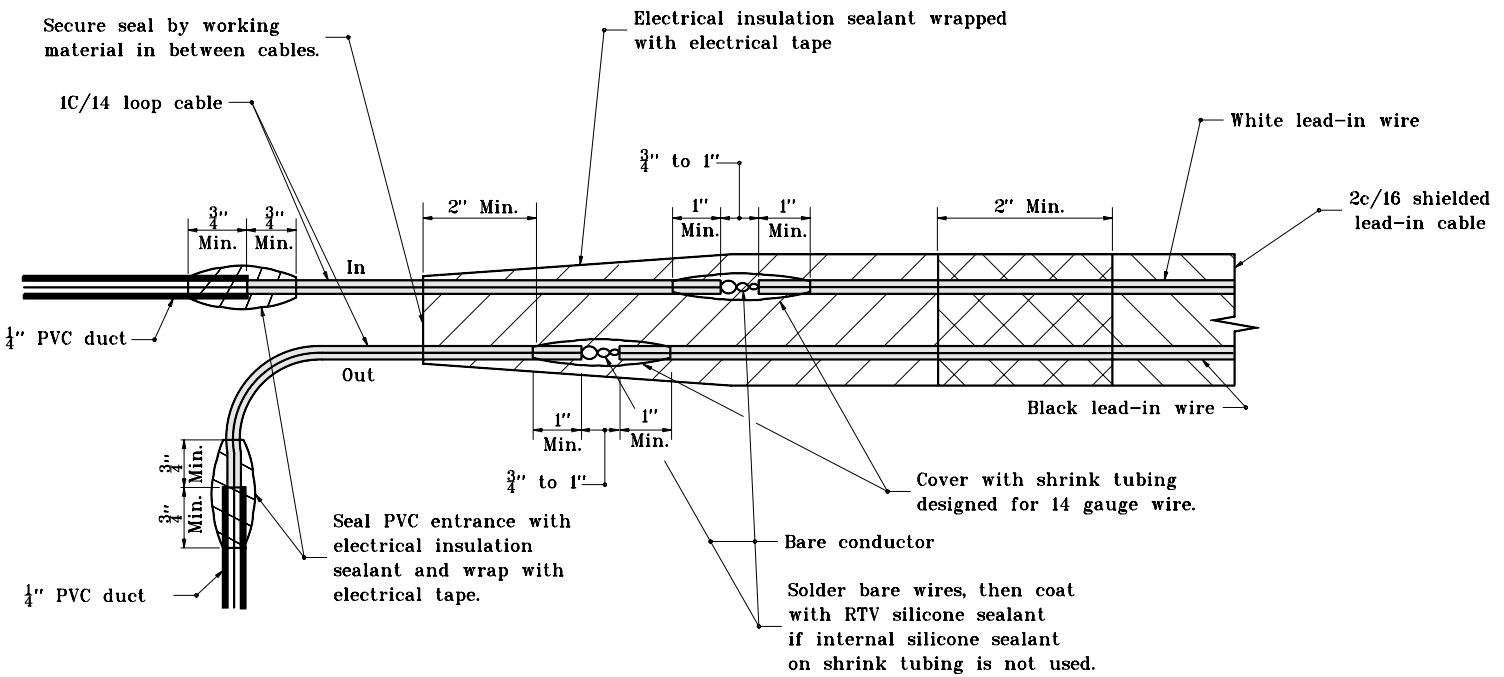

SPLICE DETAIL

INDIANA DEPARTMENT OF TRANSPORTATION

TRAFFIC SIGNAL LOOP SPLICE

MARCH 1995

STANDARD DRAWING NO. **E 805-SGLI-04**

ANTHONY L. UREMOVICH REGISTERED No. 18095 STATE OF INDIANA PROFESSIONAL ENGINEER

DESIGN STANDARDS ENGINEER

DETAILS PLACED IN THIS FORMAT 11-15-99

/s/ Anthony L. Uremovich 11-15-99
DESIGN STANDARDS ENGINEER DATE

/s/ Firooz Zandi 11-15-99
CHIEF HIGHWAY ENGINEER DATE

ORIGINALLY APPROVED 3-01-95

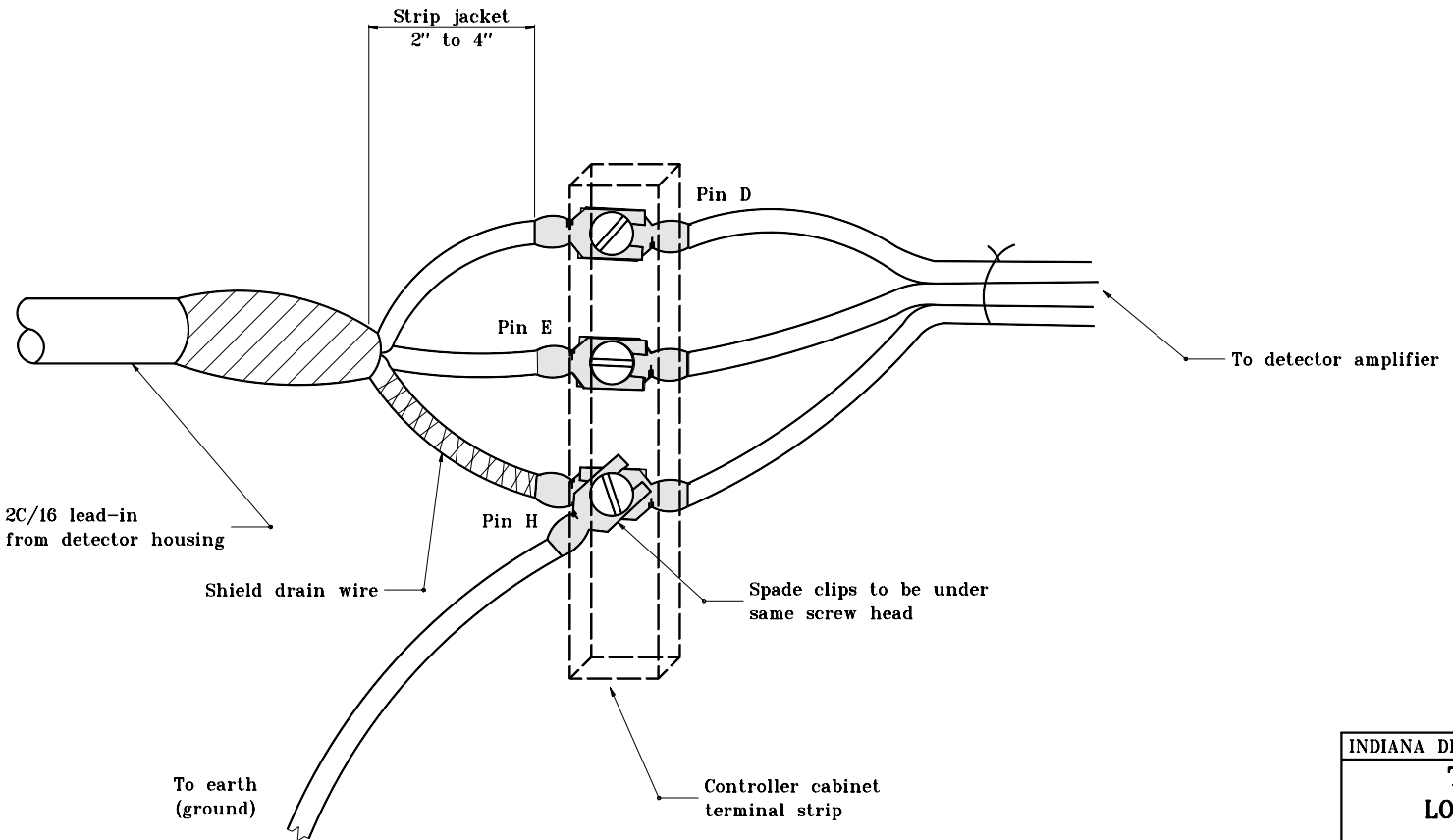

LOOP LEAD-IN
CONTROLLER CABINET CONNECTION DETAIL

INDIANA DEPARTMENT OF TRANSPORTATION

TRAFFIC SIGNAL
LOOP INSTALLATION

MARCH 1995

STANDARD DRAWING NO. **E 805-SGLI-05**

ANTHONY L. UREMOVICH REGISTERED No. 18095 STATE OF INDIANA PROFESSIONAL ENGINEER

DESIGN STANDARDS ENGINEER

DETAILS PLACED IN THIS FORMAT	11-15-99
/s/ Anthony L. Uremovich DESIGN STANDARDS ENGINEER	11-15-99 DATE
/s/ Firooz Zandi CHIEF HIGHWAY ENGINEER	11-15-99 DATE
ORIGINALLY APPROVED	3-01-95

TYPICAL LOOP DETECTION SAW-CUT PLAN (ONE LANE)

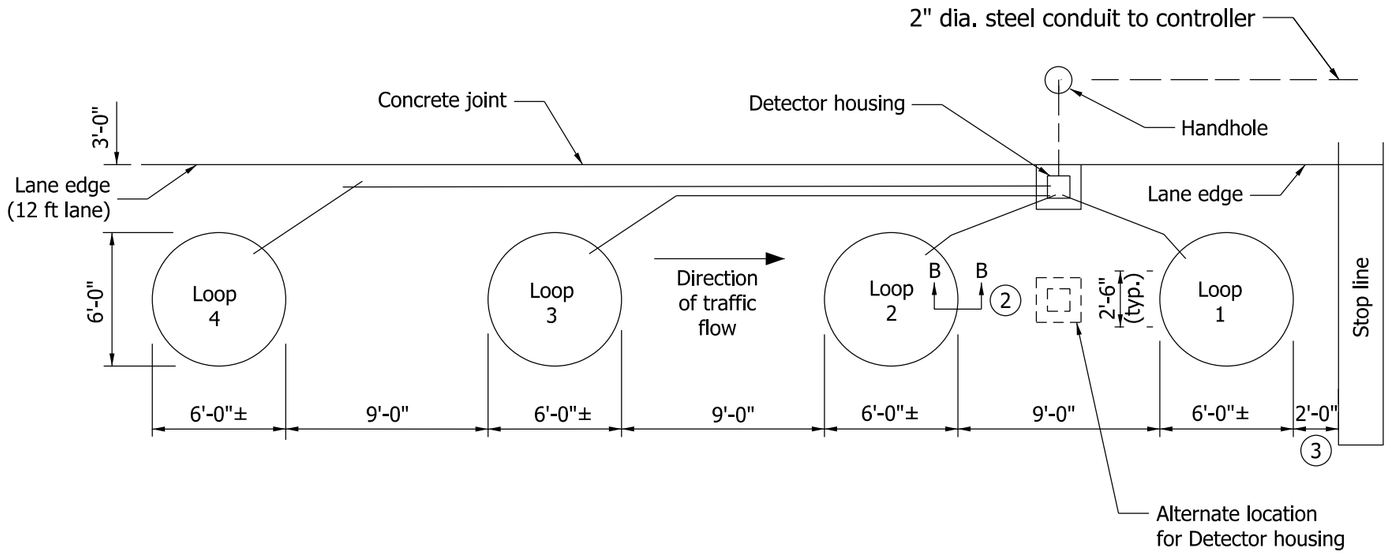

TYPICAL LOOP DETECTION (TWO LANES)

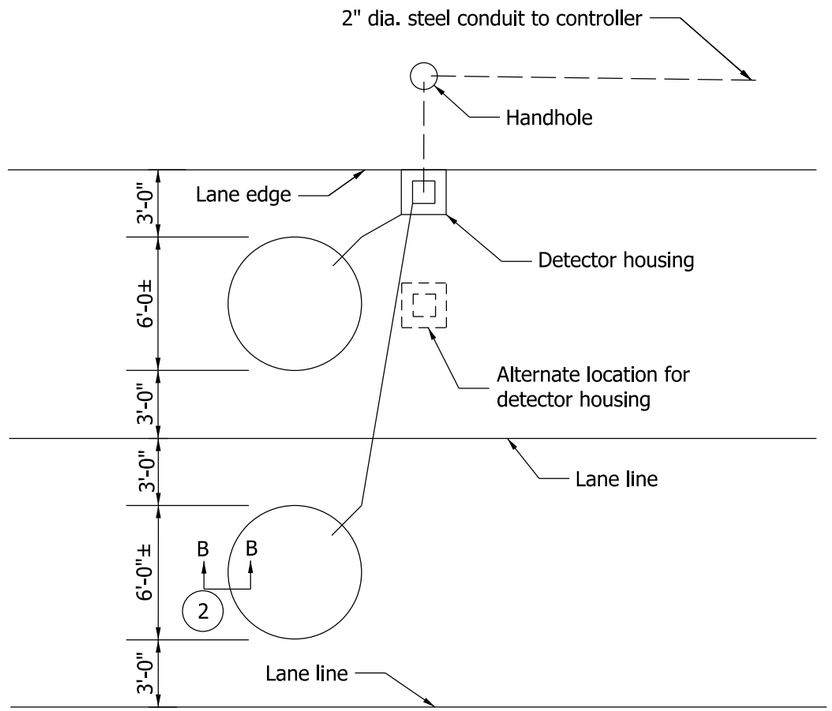

DETAIL A
DETECTOR HOUSING WIRING

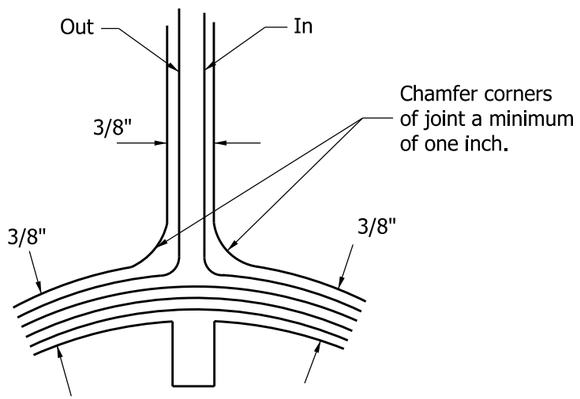

The loop wire is continously wound in the loop saw slot for the required numbers of turns (4 turns shown)

NOTES:

1. Loop saw-cuts as shown on the plans are to be considered as schematic only. In the event of discrepancies, this detail shall govern.
2. See Standard Drawing E 805-SGLI-02 for Section B-B.
3. This distance is typical depending on the intersection geometrics; a loop can be sawed in front of the stop line.
4. The loop(s) shall be centered transversely in the travel lane.
5. The saw slot for the line from the detector housing to the circular loop shall be approximately perpendicular to the tangent of the loop at the point of intersection.

INDIANA DEPARTMENT OF TRANSPORTATION

TRAFFIC SIGNAL LOOP INSTALLATION

SEPTEMBER 2011

STANDARD DRAWING NO. E 805-SGLI-06

RICHARD L. VanCLEAVE REGISTERED No. 9750 STATE OF INDIANA PROFESSIONAL ENGINEER

DESIGN STANDARDS ENGINEER

/s/ Richarh L. Vancleave 09/01/11
DESIGN STANDARDS ENGINEER DATE

/s/ Mark A. Miller 09/01/11
CHEIF HIGHWAY ENGINEER DATE

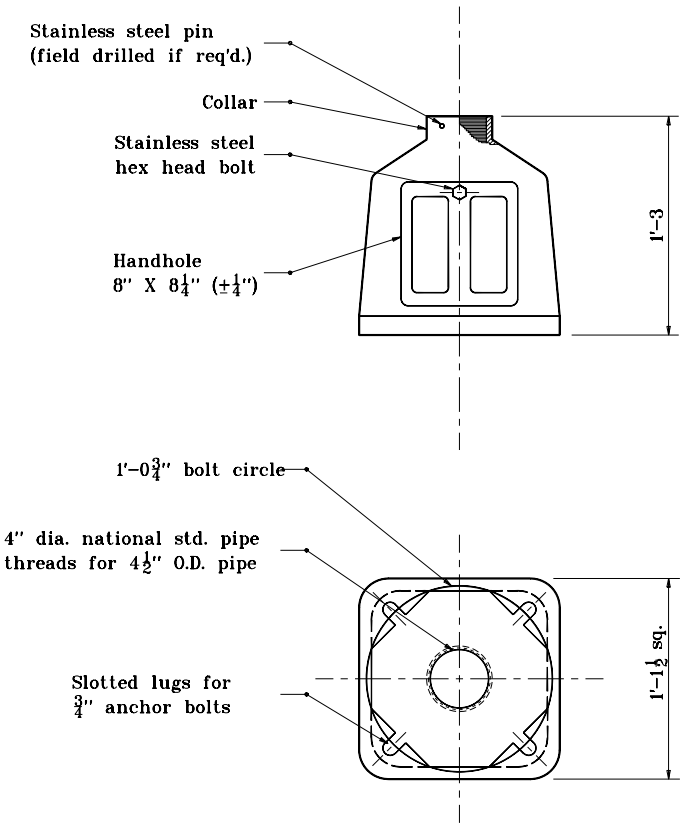

BOTTOM VIEW

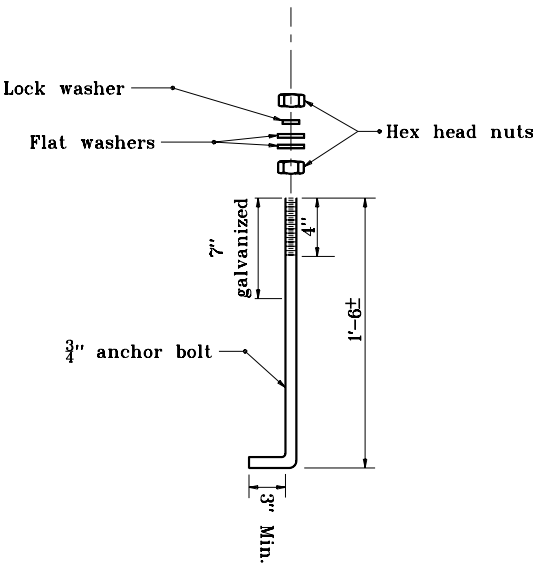

ANCHOR BOLT FOR
A, M, AND P-1
FOUNDATIONS

INDIANA DEPARTMENT OF TRANSPORTATION

ANCHOR BOLTS AND PEDESTAL BASE

SEPTEMBER 1998

STANDARD DRAWING NO. **E 805-SGPB-01**

ANTHONY L. UREMOVICH REGISTERED No. 18095 STATE OF INDIANA PROFESSIONAL ENGINEER

DESIGN STANDARDS ENGINEER

DETAILS PLACED IN THIS FORMAT	11-15-99
/s/ Anthony L. Uremovich DESIGN STANDARDS ENGINEER	11-15-99 DATE
/s/ Firooz Zandi CHIEF HIGHWAY ENGINEER	11-15-99 DATE
ORIGINALLY APPROVED	9-01-98

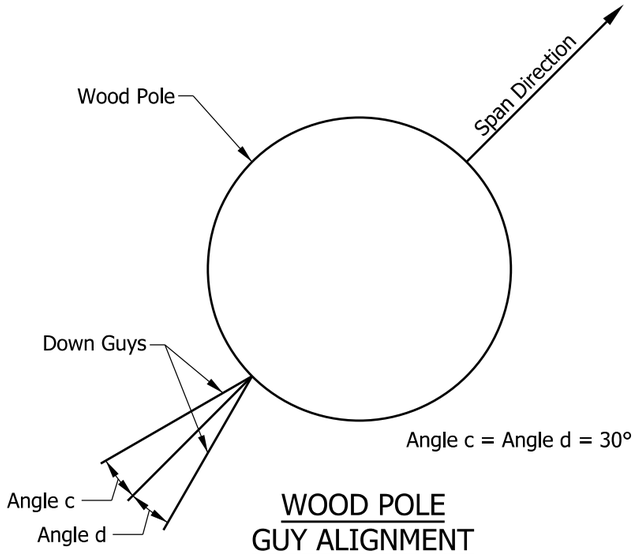

WOOD POLE
GUY ALIGNMENT
(1 span)

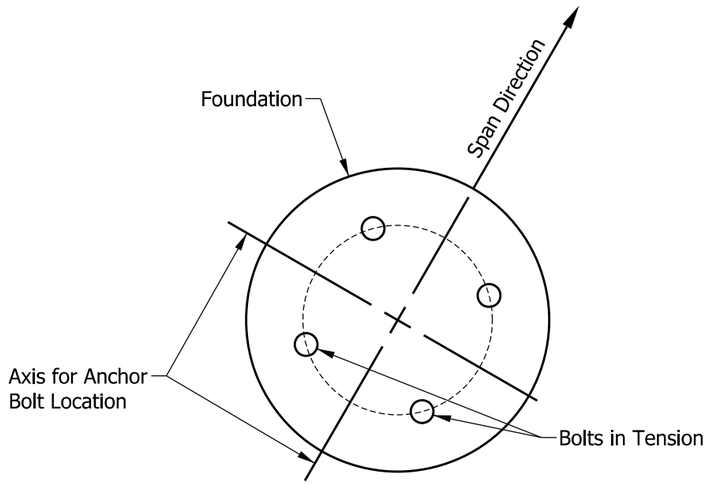

STEEL STRAIN POLE
ANCHOR BOLT ORIENTATION
(1 span)

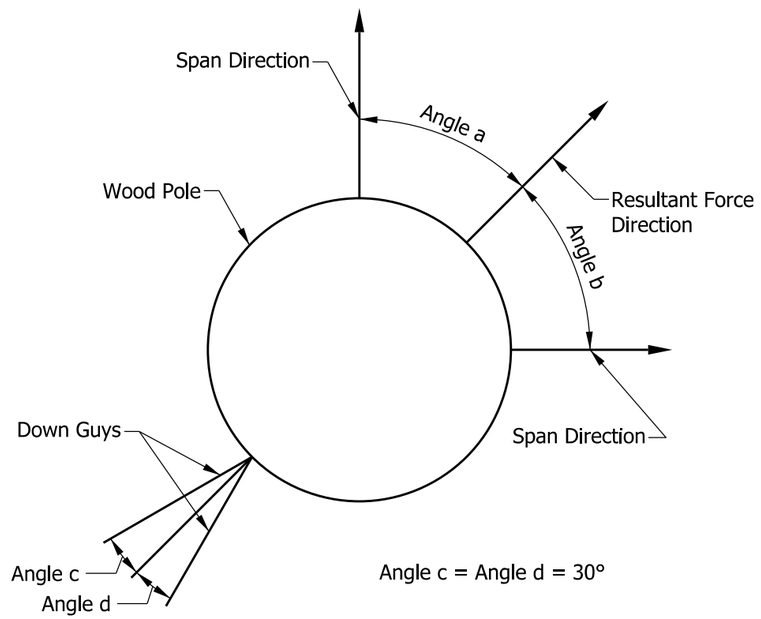

WOOD POLE
GUY ALIGNMENT
(2 spans)

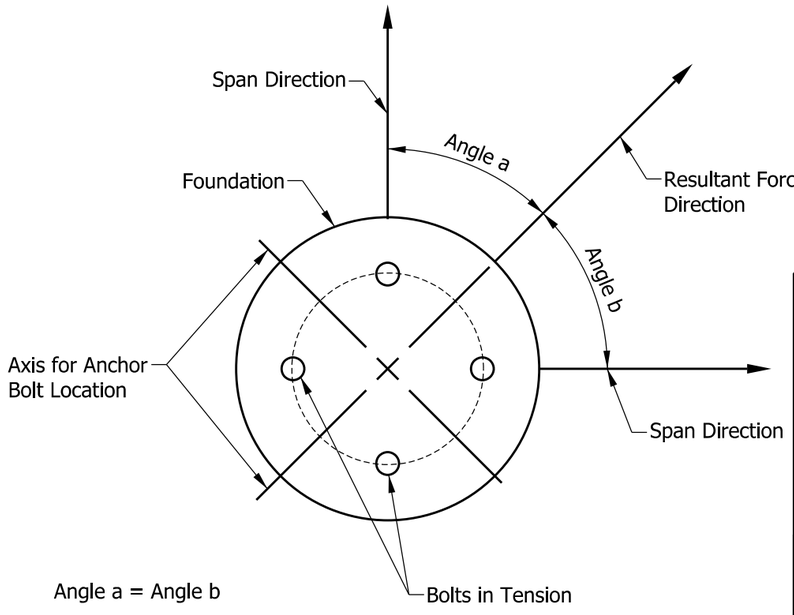

STEEL STRAIN POLE
ANCHOR BOLT ORIENTATION
(2 spans)

INDIANA DEPARTMENT OF TRANSPORTATION

SIGNAL POLES
GUY ALIGNMENT AND
ANCHOR BOLT ORIENTATION
SEPTEMBER 2013

STANDARD DRAWING NO. E 805-SGSC-01

ALFREDO B. HANZA
REGISTERED
No.
60020657
STATE OF
INDIANA
PROFESSIONAL ENGINEER

/s/ Alfredo B. Hanza 02/27/13
DESIGN STANDARDS ENGINEER DATE

/s/ Mark A. Miller 03/27/13
CHIEF ENGINEER DATE

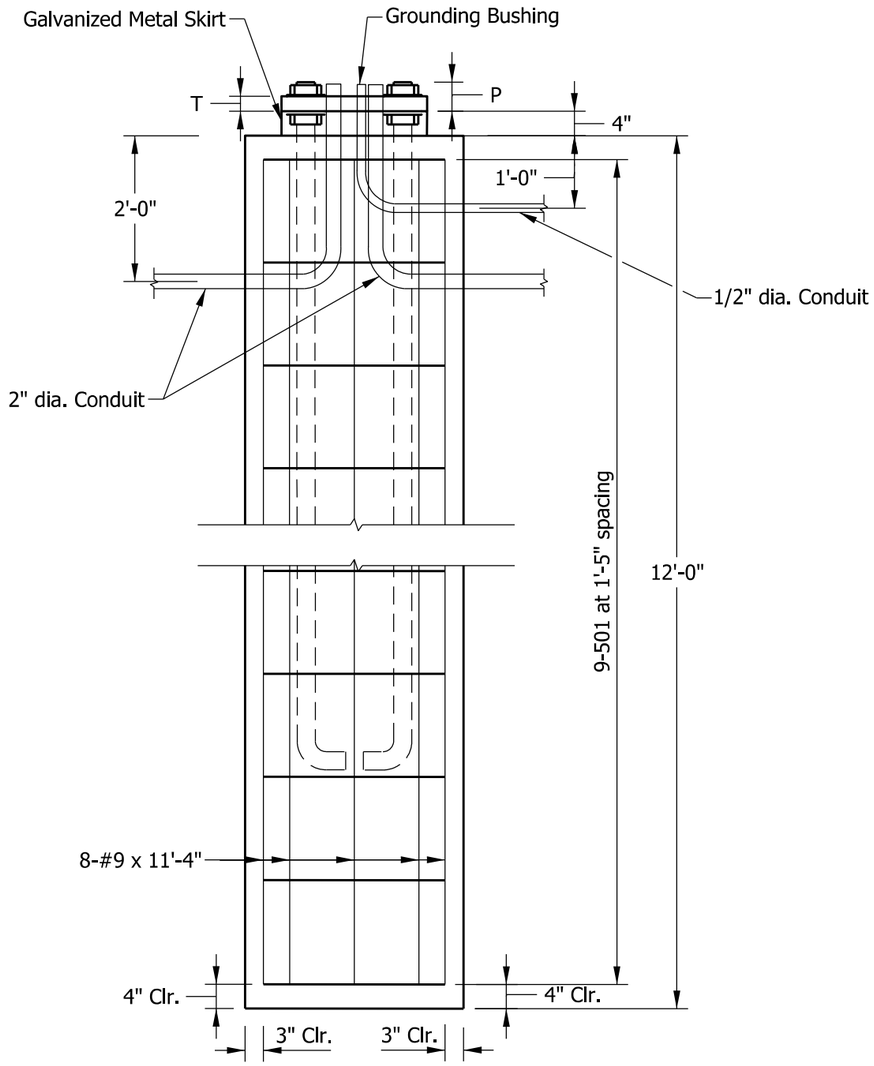

ELEVATION

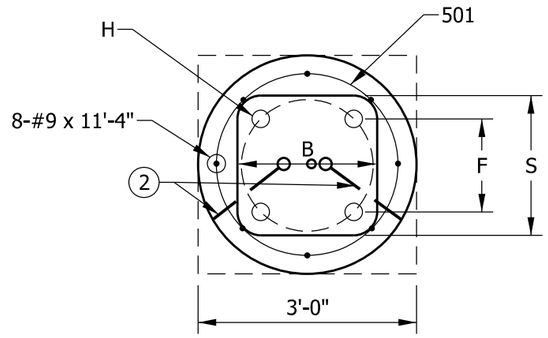

PLAN

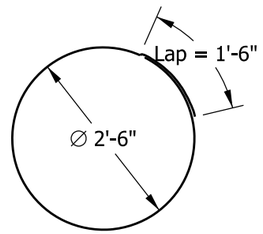

501 x 9'-4"

NOTES:

1. A minimum of 2 - 2-in. dia. conduit inlets shall be installed for each foundation.

(2) Make a permanent line on top of the concrete foundation indicating the direction of each 2-in. conduit exit.

BASE PLATE AND ANCHOR BOLT DATA								
Anchor Bolts	B	F	H	P	S	T	Pole Size	Foundation
2 1/4" x 8'-0"	1'-10"	1'-3 1/2"	2 3/4"	4 3/4"	1'-11"	2 1/2"	1'-3" x 30' 1'-5" x 36'	3'-0" x 12'

INDIANA DEPARTMENT OF TRANSPORTATION

SIGNAL STRAIN POLE, STEEL,
FOUNDATION DETAILS

SEPTEMBER 2013

STANDARD DRAWING NO. E 805-SGSC-02

ALFREDO B. HANZA
REGISTERED
No. 60020657
STATE OF INDIANA
PROFESSIONAL ENGINEER

/s/ Alfredo B. Hanza 02/27/13
DESIGN STANDARDS ENGINEER DATE

/s/ Mark A. Miller 03/27/13
CHIEF ENGINEER DATE

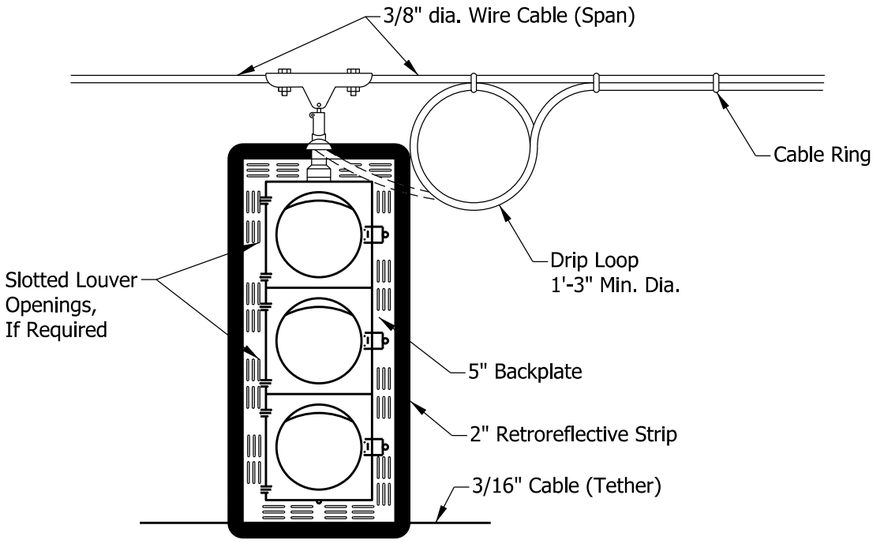

SPAN-HEAD ATTACHMENT

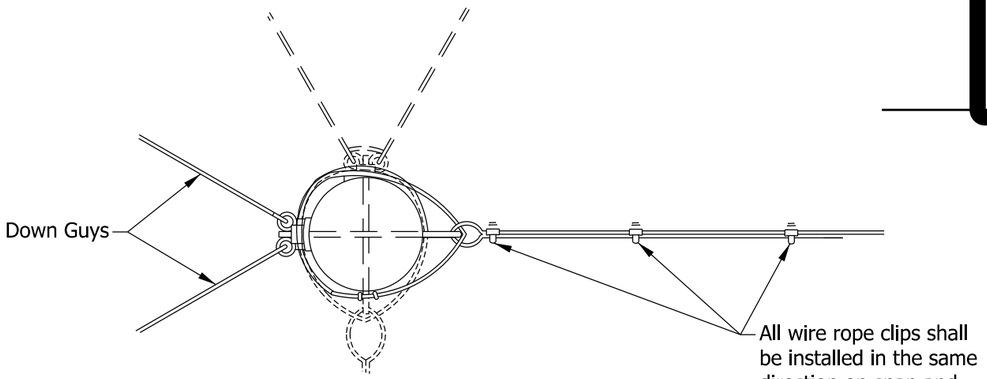

TOP VIEW

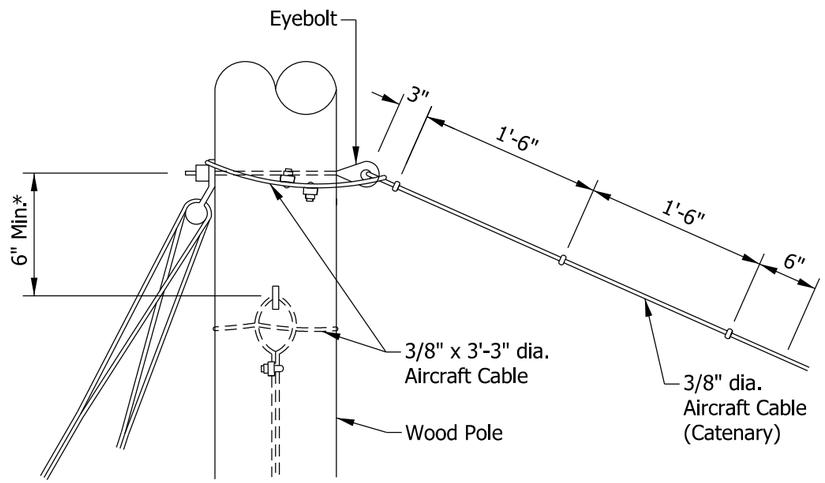

SAFETY CABLE AND EYE BOLT DETAIL

* If more than one catenary is attached to pole.

NOTES:

1. Installation is the same for steel strain poles except pole bands will be used.
2. Aircraft cable shall use a heavy closed wire rope thimble at contact with pole bands.

INDIANA DEPARTMENT OF TRANSPORTATION

SIGNAL CABLE
SPAN AND CATENARY ATTACHMENT

SEPTEMBER 2013

STANDARD DRAWING NO. E 805-SGSC-03

ALFREDO B. HANZA
REGISTERED
No. 60020657
STATE OF INDIANA
PROFESSIONAL ENGINEER

/s/ Alfredo B. Hanza	*02/27/13*
DESIGN STANDARDS ENGINEER	DATE
/s/ Mark A. Miller	*03/27/13*
CHIEF ENGINEER	DATE

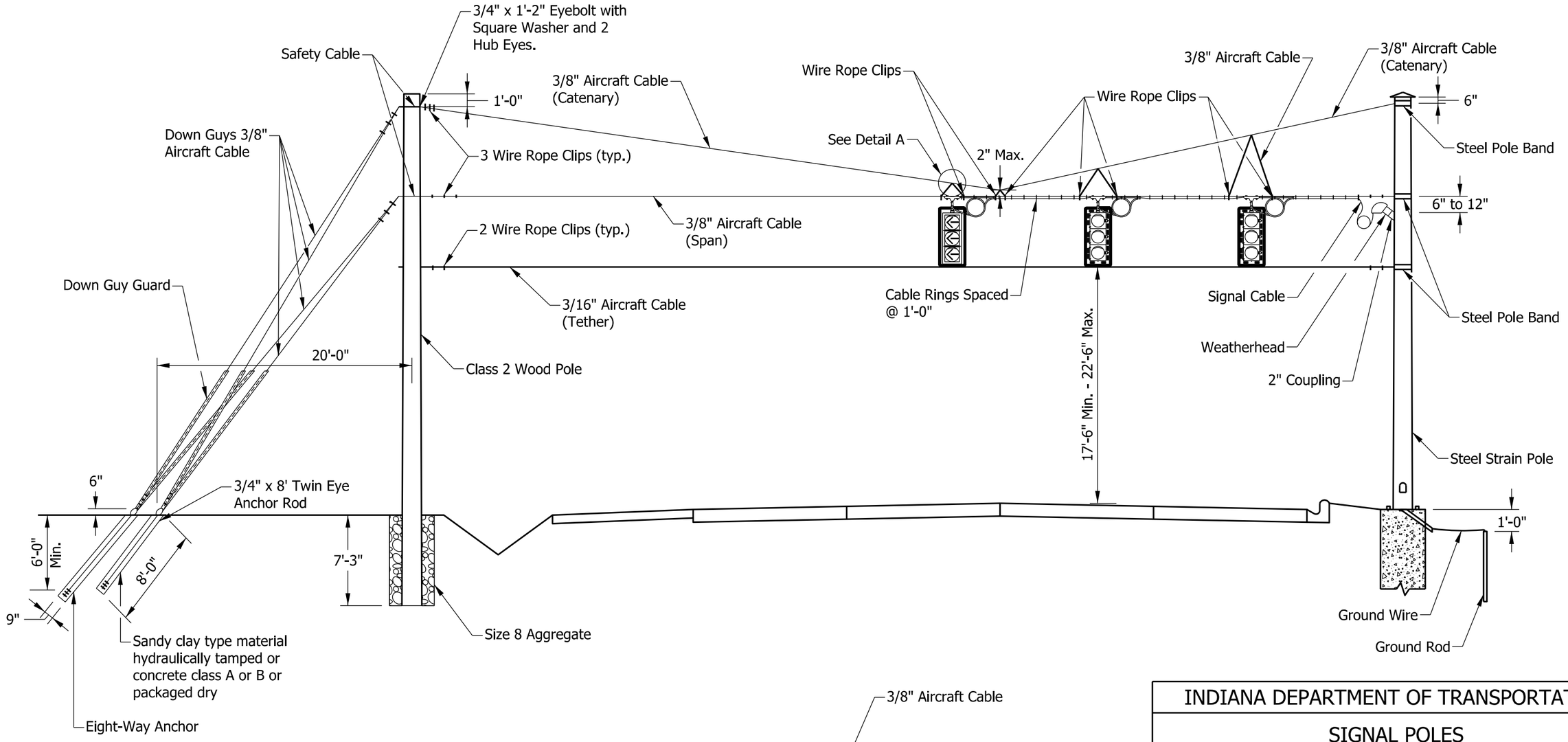

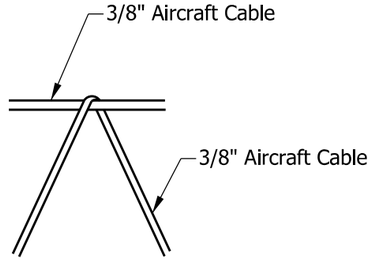

DETAIL A

INDIANA DEPARTMENT OF TRANSPORTATION

SIGNAL POLES SPAN, CATENARY & TETHER DETAIL

SEPTEMBER 2013

STANDARD DRAWING NO. E 805-SGSC-04

ALFREDO B. HANZA REGISTERED No. 60020657 STATE OF INDIANA PROFESSIONAL ENGINEER

/s/ Alfredo B. Hanza — 02/27/13
DESIGN STANDARDS ENGINEER — DATE

/s/ Mark A. Miller — 03/27/13
CHIEF ENGINEER — DATE

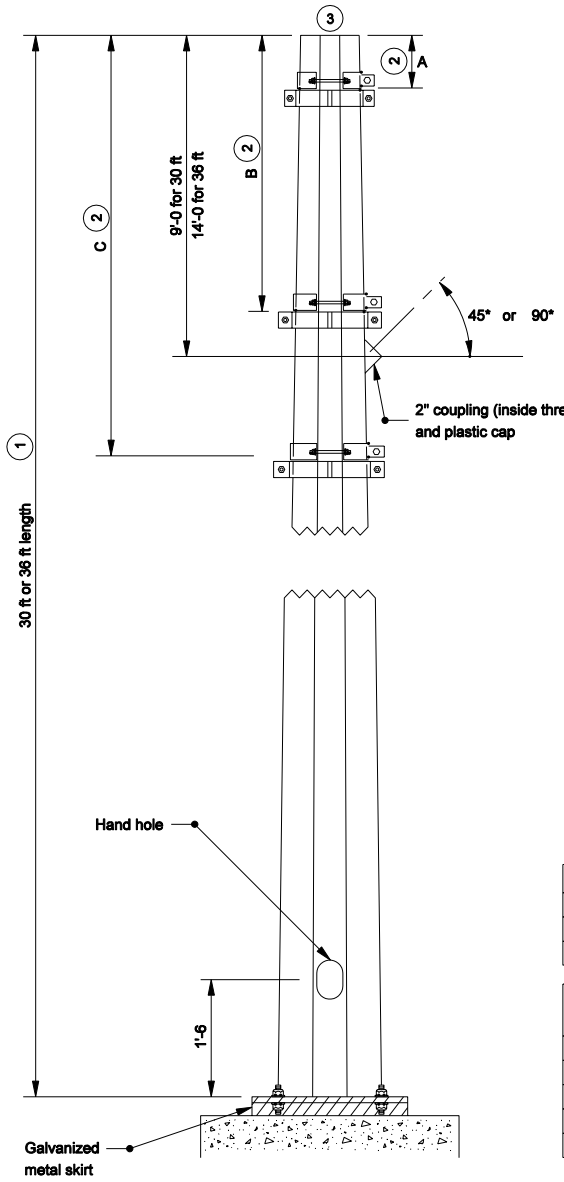

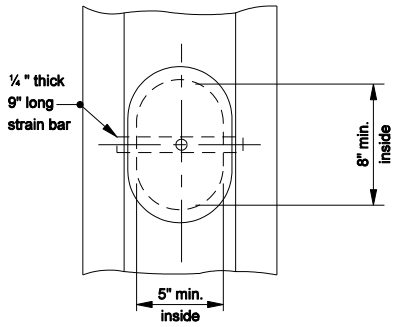

HANDHOLE AND GROUNDING LUG

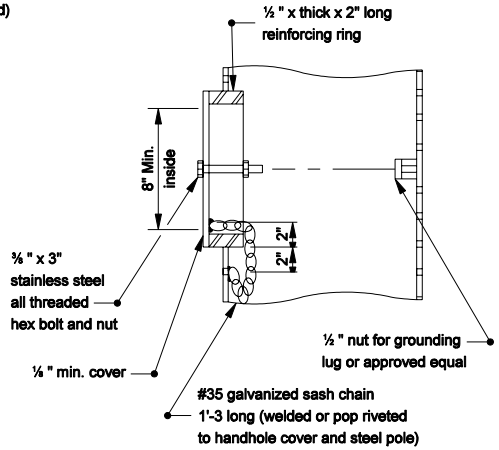

GENERAL NOTES:

1. Taper pole 0.14 in. per foot of length.
2. Band position can be variable depending of minimum clearance requirement of tether the cable over the road, and the elevation of the top of the foundation relative to the top of the traveled roadway.
3. Design load of 8000 lb applied perpendicular to pole axis 1'-6 from top of pole.

POLE BAND POSITION			
POLE LENGTH	A	B	C
30 ft	6"	8'-0	12'-0
36 ft	1'-0	13'-0	17'-0

POLE BAND SIZE NUMBER	O.D.(ACROSS POINTS) OF POLE (ROUND OR MULTISIDED)	
	MIN.	MAX.
12	11	1'-1
13	1'-1	1'-2
14	1'-2	1'-3
15	1'-3	1'-4

INDIANA DEPARTMENT OF TRANSPORTATION

30 ft. AND 36 ft. SIGNAL STEEL STRAIN POLES

SEPTEMBER 2005

STANDARD DRAWING NO. E 805-SGSP-01

RICHARD L. VanCLEAVE REGISTERED No. 9750 STATE OF INDIANA PROFESSIONAL ENGINEER

DESIGN STANDARDS ENGINEER

/s/ Richard L. VanCleave 9-01-05
DESIGN STANDARDS ENGINEER DATE

/s/ Richard K. Smutzer 9-01-05
CHIEF HIGHWAY ENGINEER DATE

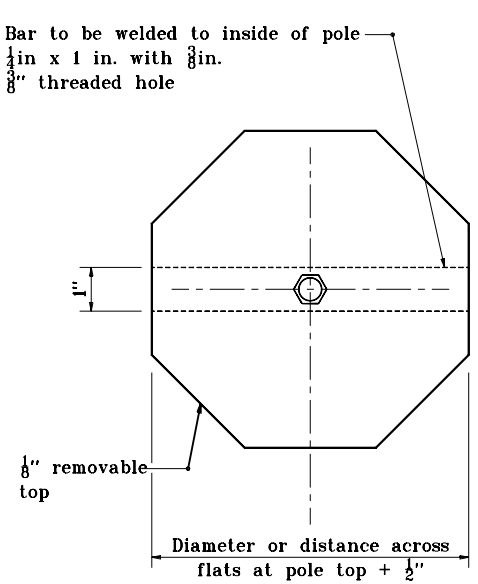

TOP COVER

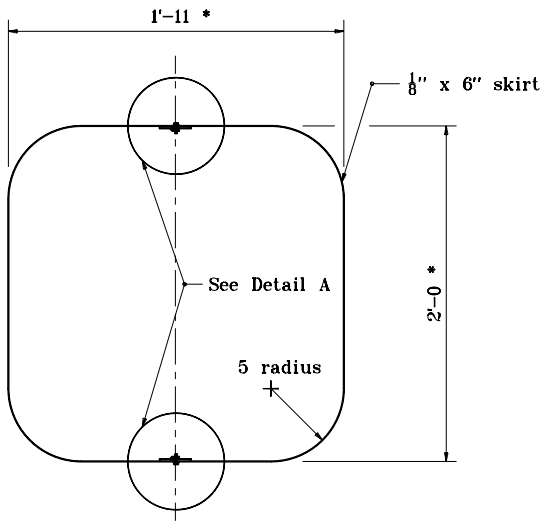

METAL SKIRT (BASE PLATE)

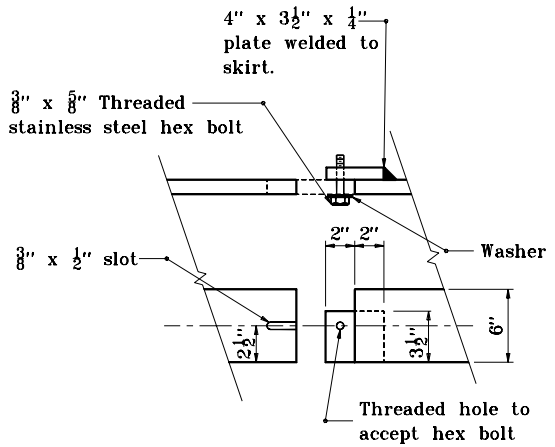

DETAIL A

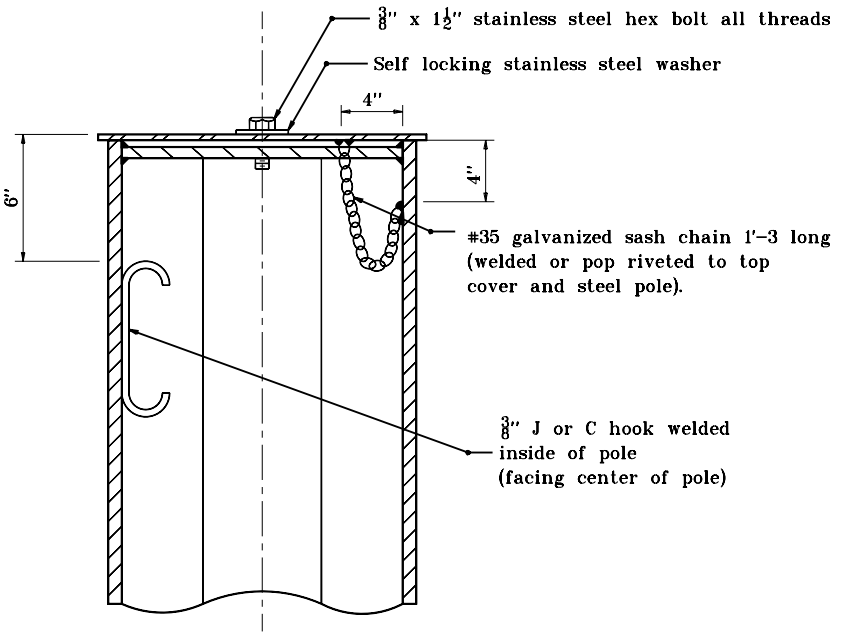

INDIANA DEPARTMENT OF TRANSPORTATION

TOP COVER AND METAL SKIRT OF SIGNAL STEEL STRAIN POLE

MARCH 1995

STANDARD DRAWING NO. **E 805-SGSP-02**

ANTHONY L. UREMOVICH REGISTERED No. 18095 STATE OF INDIANA PROFESSIONAL ENGINEER

DESIGN STANDARDS ENGINEER

DETAILS PLACED IN THIS FORMAT 11-15-99

/s/ Anthony L. Uremovich 11-15-99
DESIGN STANDARDS ENGINEER DATE

/s/ Firooz Zandi 11-15-99
CHIEF HIGHWAY ENGINEER DATE

ORIGINALLY APPROVED 3-01-95

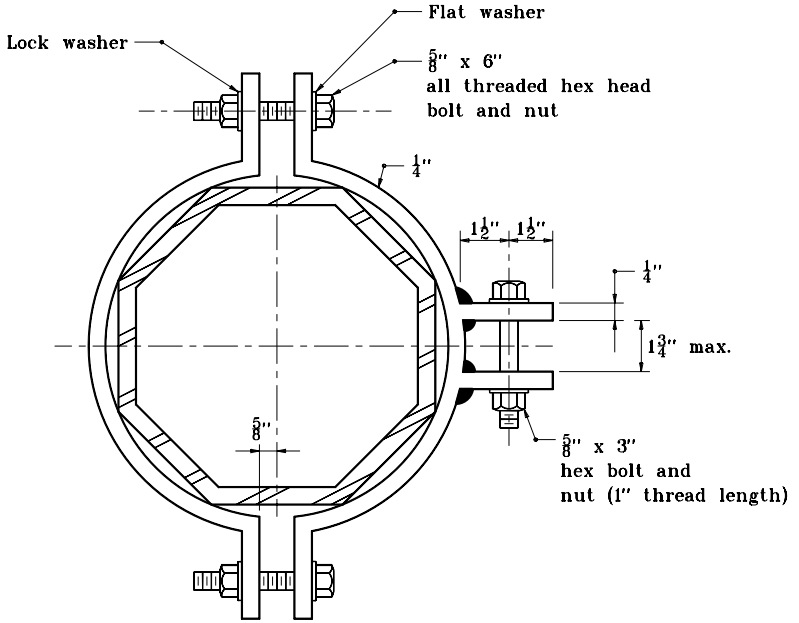

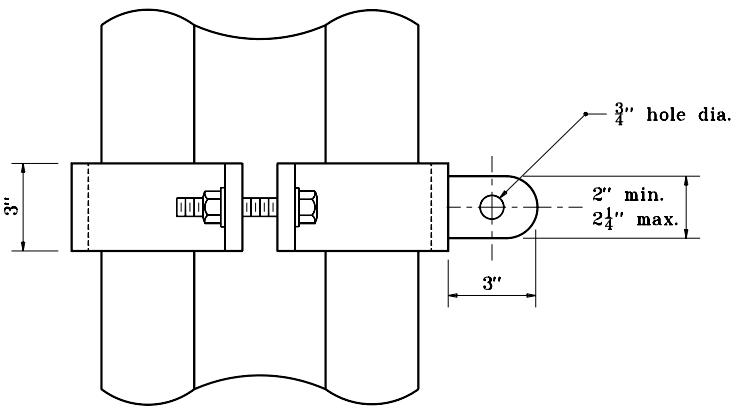

REQUIRES TWO POLE BANDS AT EACH POSITION ON POLE (SIX BANDS PER POLE)

INDIANA DEPARTMENT OF TRANSPORTATION

POLE BAND FOR SIGNAL STEEL STRAIN POLE

SEPTEMBER 1998

STANDARD DRAWING NO. **E 805-SGSP-03**

ANTHONY L. UREMOVICH REGISTERED No. 18095 STATE OF INDIANA PROFESSIONAL ENGINEER

DESIGN STANDARDS ENGINEER

DETAILS PLACED IN THIS FORMAT	11-15-99
/s/ Anthony L. Uremovich, DESIGN STANDARDS ENGINEER	11-15-99
/s/ Firooz Zandi, CHIEF HIGHWAY ENGINEER	11-15-99
ORIGINALLY APPROVED	9-01-98

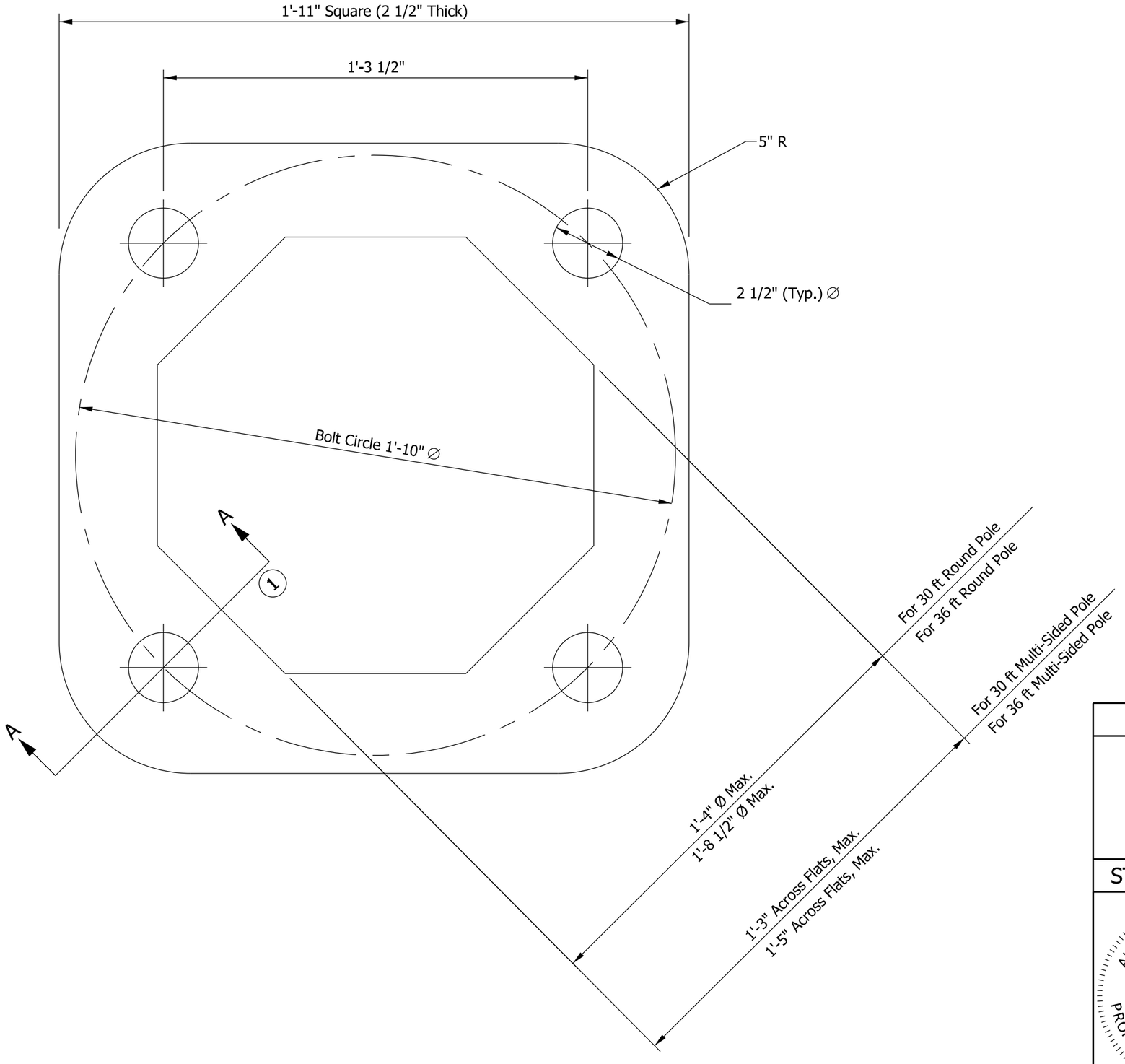

NOTES:

(1) See Standard Drawing E 805-SGSP-05 for Section A-A.

INDIANA DEPARTMENT OF TRANSPORTATION

SIGNAL STEEL STRAIN POLE
BASE PLATE

SEPTEMBER 2013

STANDARD DRAWING NO. E 805-SGSP-04

ALFREDO B. HANZA
REGISTERED
No.
60020657
STATE OF
INDIANA
PROFESSIONAL ENGINEER

/s/ Alfredo B. Hanza 02/05/13
DESIGN STANDARDS ENGINEER DATE

/s/ Mark A. Miller 03/27/13
CHIEF ENGINEER DATE

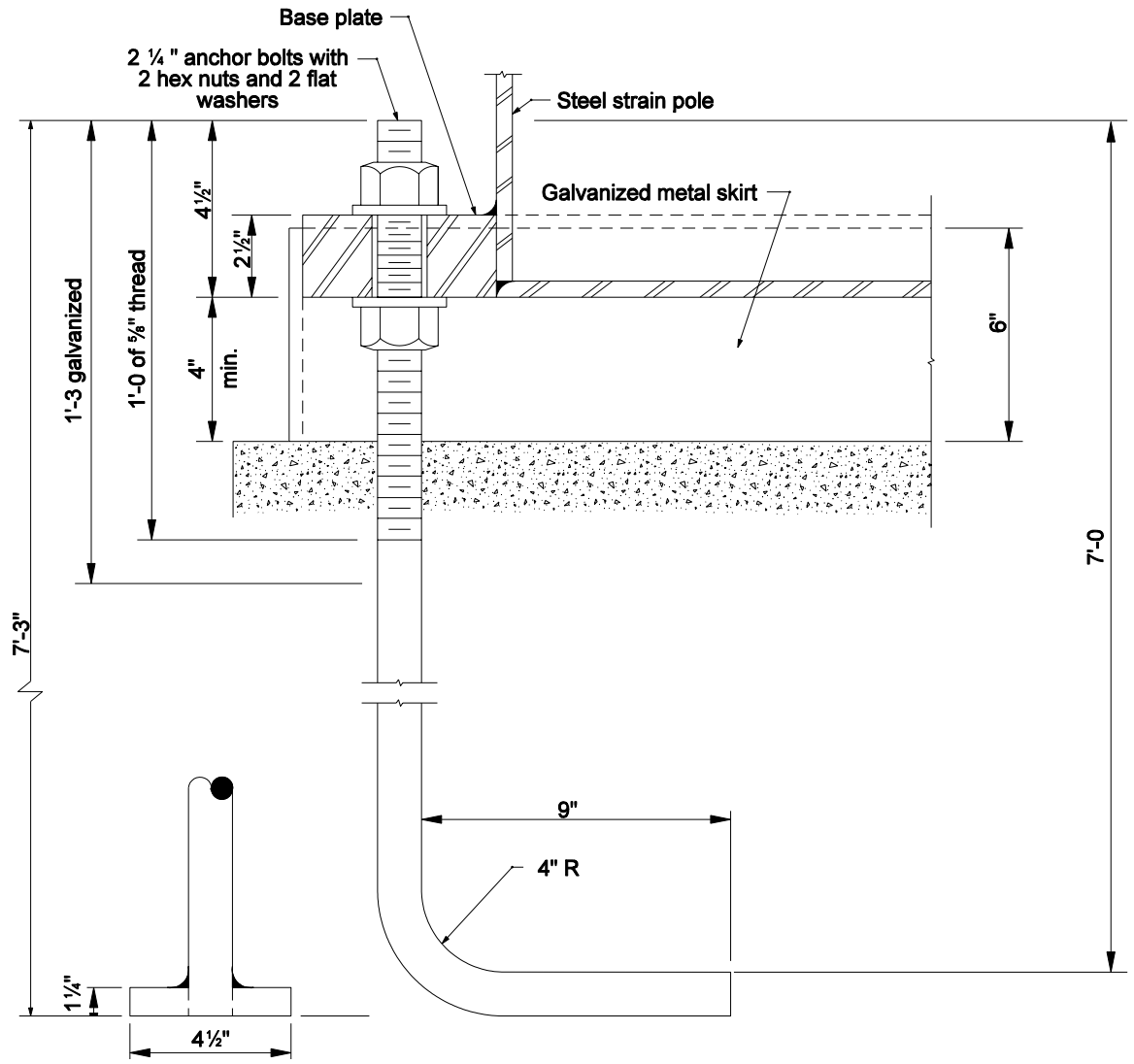

ALTERNATIVE
1¼" x 4½" square plate tapped & welded to anchor bolt

SECTION A-S

INDIANA DEPARTMENT OF TRANSPORTATION

ANCHOR BOLT DETAIL FOR SIGNAL STEEL STRAIN POLES

MARCH 2004

STANDARD DRAWING NO. E 805-SGSP-05

RICHARD L. VanCLEAVE REGISTERED No. 9750 STATE OF INDIANA PROFESSIONAL ENGINEER

DESIGN STANDARDS ENGINEER

/s/ Richard L. VanCleave 3/01/04
DESIGN STANDARDS ENGINEER DATE

/s/ Richard K. Smutzer 3/01/04
CHIEF HIGHWAY ENGINEER DATE

INDEX	
SHEET NO.	SUBJECT
1	Drawing Index
2	Single Signal Arm Pole Elevation, Dimensions, and Base Plate Weld Detail
3	Signal Arm Dimensions & Details
4	Signal Arm Pole Base Plate, Bottom Splice Plates, and Pole Top Cover Details
5	Signal Arm Connection Details
6	Handhole Details
7	Placement of Signals and Signs, Loading for Arm of 35' or Less
8	Placement of Signals and Signs, Loading for Arm of Greater Than 35' to 60'
9	Combination Pole Elevation, Dimensions, and Base Plate Weld Detail
10	Combination Arm Dimensions & Details
11	Combination Arm Connection Details
12	Combination Pole Splice Details for Arms 35' or Less
13	Combination Pole Splice Details for Arm of Greater Than 35' to 60'
14	Combination Arm Loading for Arm of 35' or Less
15	Combination Arm Loading for Arm of Greater Than 35' to 60'
16	Drilled Shaft Foundation Type A for Arm of 35' or Less
17	Drilled Shaft Foundation Type B for Arm of Greater Than 35' to 60'
18	Spread Footing Foundation Type C for Arm of 35' or Less
19	Spread Footing Foundation Type D for Arm of Greater Than 35' to 60'

INDIANA DEPARTMENT OF TRANSPORTATION

TRAFFIC SIGNAL CANTILEVER STRUCTURE
DRAWING INDEX

SEPTEMBER 2013

STANDARD DRAWING NO. E 805-TSCS-01

ALFREDO B. HANZA
REGISTERED
No.
60020657
STATE OF
INDIANA
PROFESSIONAL ENGINEER

/s/ Alfredo B. Hanza 02/05/13
DESIGN STANDARDS ENGINEER DATE

/s/ Mark A. Miller 03/27/13
CHIEF ENGINEER DATE

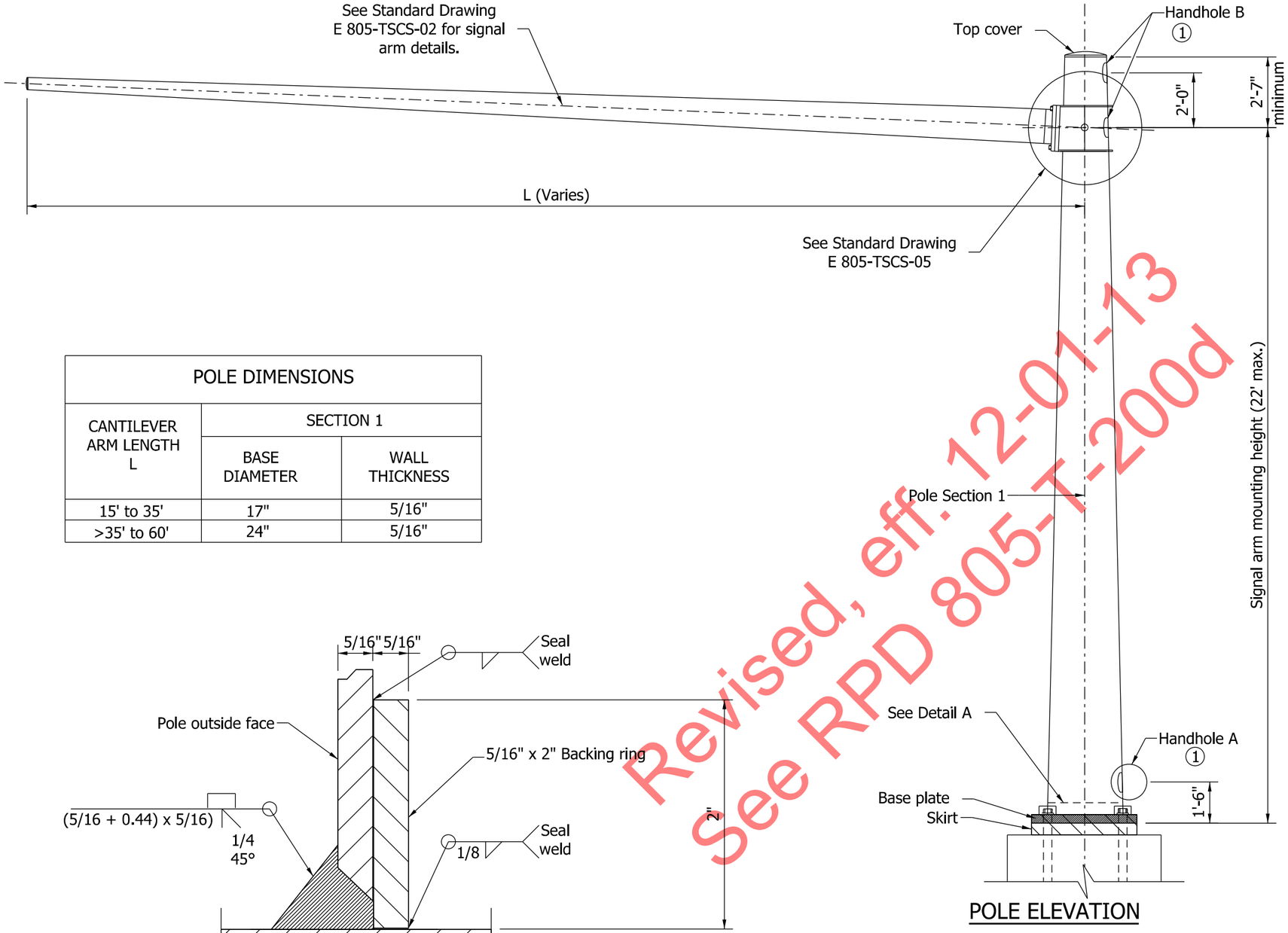

POLE ELEVATION

POLE DIMENSIONS		
CANTILEVER ARM LENGTH L	SECTION 1	
	BASE DIAMETER	WALL THICKNESS
15' to 35'	17"	5/16"
>35' to 60'	24"	5/16"

POLE/BASE PLATE WELD
DETAIL A

NOTES:

① See Standard Drawing E 805-TSCS-06 for handhole details.

2. See Standard Drawing E 805-SGGR-01 to -03 for grounding details.

Revised, eff. 12-01-13
See RPD 805-T-200d

INDIANA DEPARTMENT OF TRANSPORTATION

TRAFFIC SIGNAL CANTILEVER STRUCTURE
SINGLE SIGNAL ARM POLE ELEVATION,
DIMENSIONS, AND BASE PLATE WELD DETAIL
SEPTEMBER 2013

STANDARD DRAWING NO. E 805-TSCS-02

ALFREDO B. HANZA
REGISTERED
No. 60020657
STATE OF INDIANA
PROFESSIONAL ENGINEER

/s/ Alfredo B. Hanza 02/05/13
DESIGN STANDARDS ENGINEER DATE

/s/ Mark A. Miller 03/27/13
CHIEF ENGINEER DATE

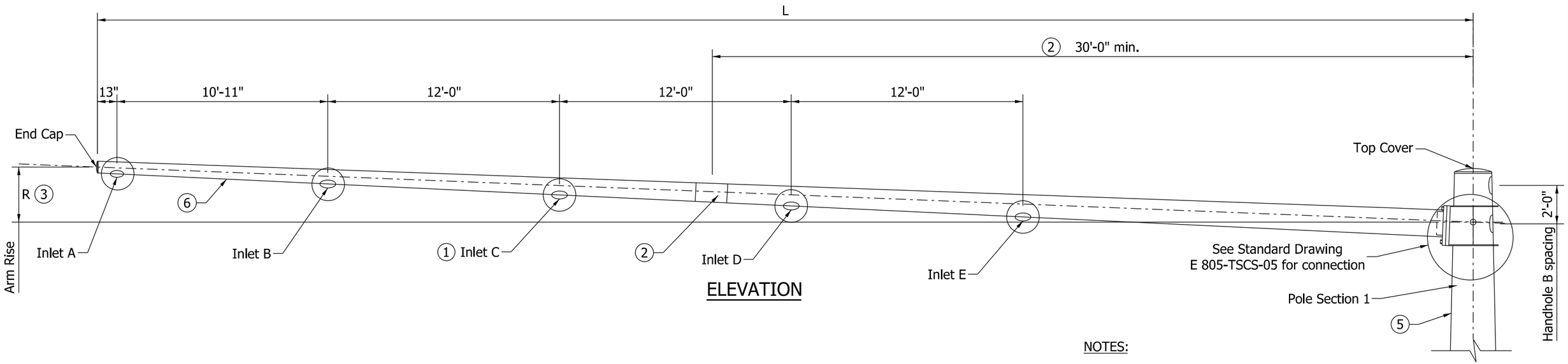

ELEVATION

NOTES:

1. Number of cable inlets depends on arm L (See Arm Dimensions Table). The inlet diameter shall be 1 3/4" with rubber grommet (Typ.)
2. Optional splice can be used for arm length of greater than 40'. Field assembly shall achieve a snug tight joint, with minimum overlap not less than 1.5 times the inside dimension of the end section.
3. Arm rise R is measured in the undeflected position without vertical loads on the arm.
4. See Standard Drawings E 805-TSCS-07 and -08 for placement of signal and signs for each arm length.
5. If seam welds are used, the weld location for the arms shall be along the bottom, and on the side of pole as shown.

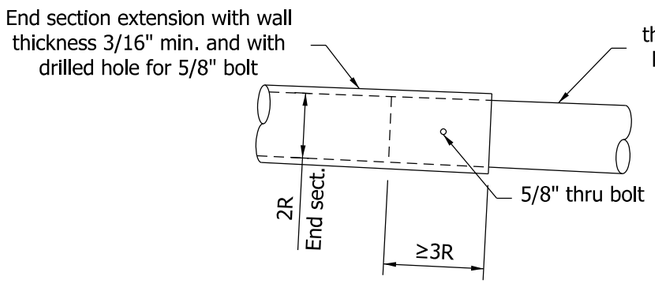

2 OPTIONAL ARM SPLICE DETAIL

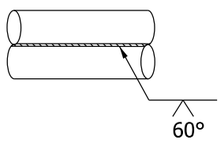

5 TYPICAL SEAM WELD

ARM DIMENSIONS TABLE				
L (ft.)	ARM DIAMETER AT POLE	ARM WALL THICKNESS (in.)	R (in.)	CABLE INLETS
15	8"	5/16"	7 1/2"	A, B
20	10"	5/16"	10"	A, B
25	11"	5/16"	1'-0 1/2"	A, B
30	13"	5/16"	1'-3"	A, B
35	14"	5/16"	1'-5 1/2"	A, B, C
40	15"	5/16"	1'-8"	A, B, C
45	17"	5/16"	1'-10 1/2"	A, B, C
50	19"	5/16"	2'-1"	A, B, C, D
55	20"	5/16"	2'-3 1/2"	A, B, C, D
60	21"	5/16"	2'-6"	A, B, C, D, E

INDIANA DEPARTMENT OF TRANSPORTATION

TRAFFIC SIGNAL CANTILEVER STRUCTURE SIGNAL ARM DIMENSIONS & DETAILS

SEPTEMBER 2013

STANDARD DRAWING NO. E 805-TSCS-03

ALFREDO B. HANZA REGISTERED No. 60020657 STATE OF INDIANA PROFESSIONAL ENGINEER

/s/ Alfredo B. Hanza 02/05/13
DESIGN STANDARDS ENGINEER DATE

/s/ Mark A. Miller 03/27/13
CHIEF ENGINEER DATE

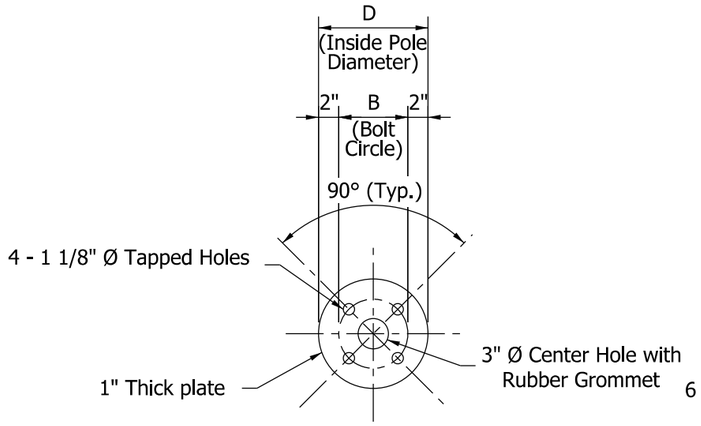

① BOTTOM SPLICE PLATE

(For Cantilever Arm Length of 35' or Less)

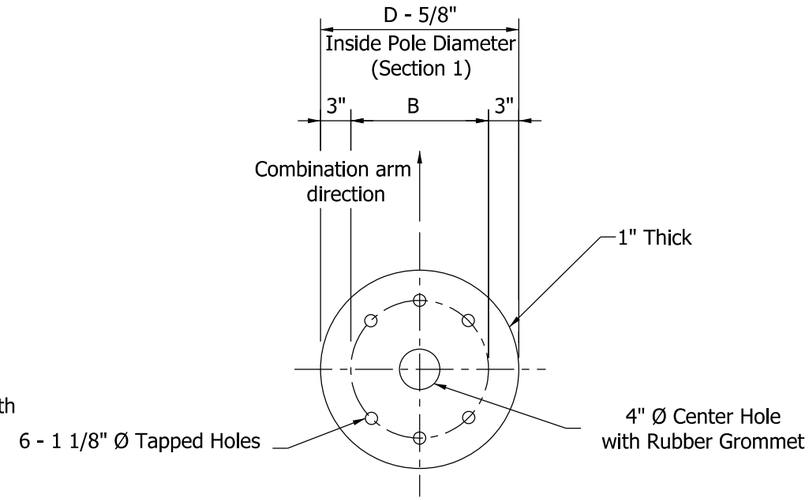

① BOTTOM SPLICE PLATE

(For Cantilever Arm Length Greater Than 35' to 60')

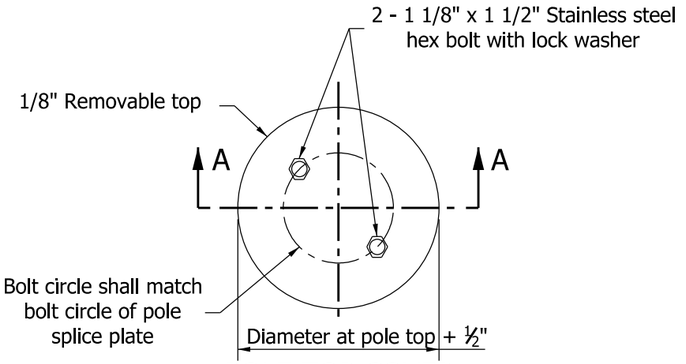

POLE TOP COVER

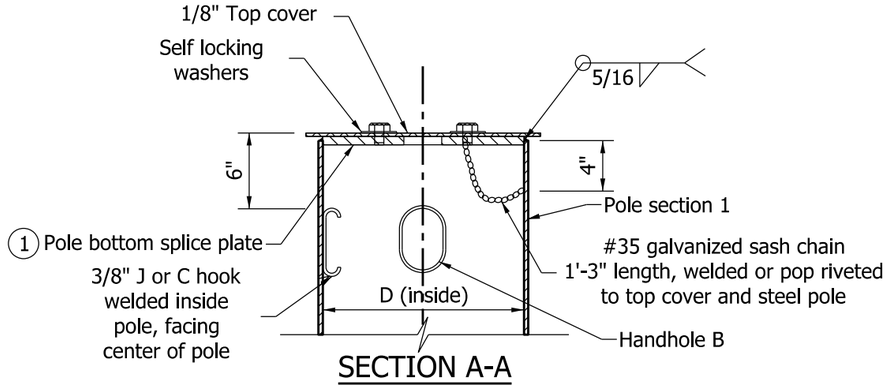

SECTION A-A

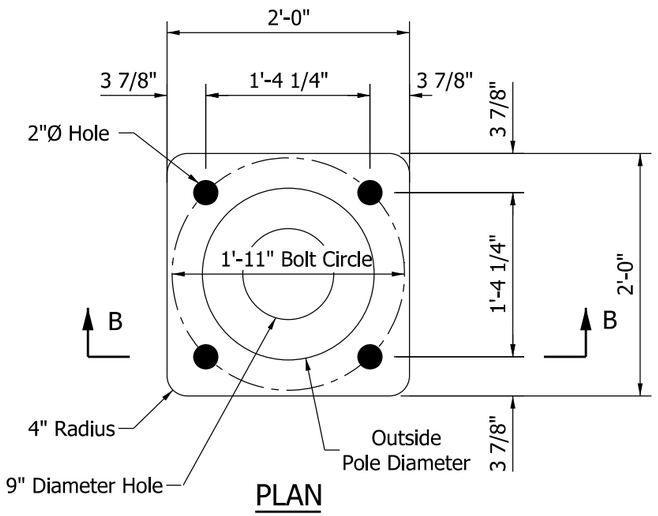

PLAN

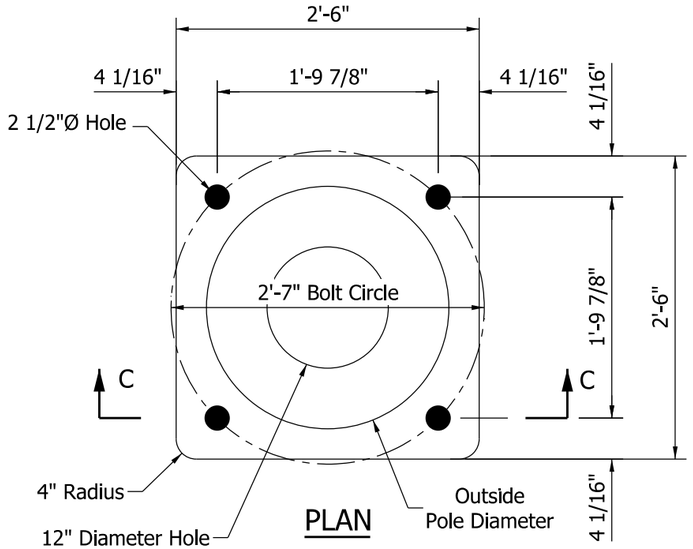

PLAN

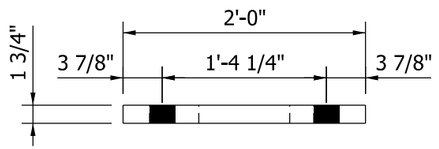

SECTION B-B

BASE PLATE A

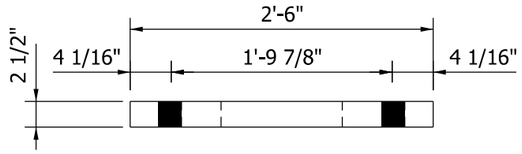

SECTION C-C

BASE PLATE B

NOTES:

① See Standard Drawings E 805-TSCS-12 and -13 for bottom splice details.

2. Bolt circle shall allow clearance for the plate washer. Cutting or trimming the washer will not be allowed.

INDIANA DEPARTMENT OF TRANSPORTATION

TRAFFIC SIGNAL CANTILEVER STRUCTURE SIGNAL ARM POLE BASE PLATE, BOTTOM SPLICE PLATES, AND POLE TOP COVER DETAILS

SEPTEMBER 2013

STANDARD DRAWING NO. E 805-TSCS-04

ALFREDO B. HANZA REGISTERED No. 60020657 STATE OF INDIANA PROFESSIONAL ENGINEER

/s/ Alfredo B. Hanza 03/26/13

DESIGN STANDARDS ENGINEER DATE

/s/ Mark A. Miller 03/27/13

CHIEF ENGINEER DATE

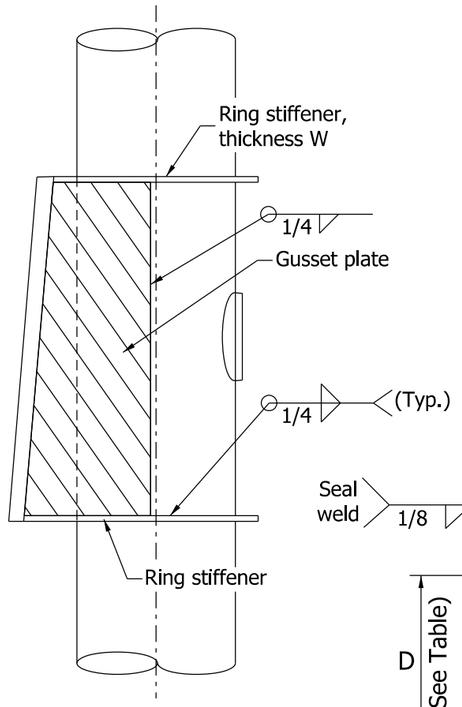

ELEVATION OF GUSSET PLATE

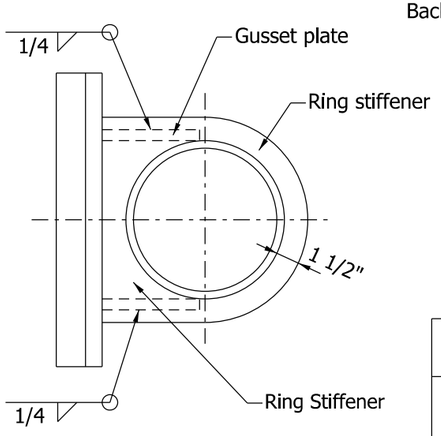

TOP OF GUSSET PLATE

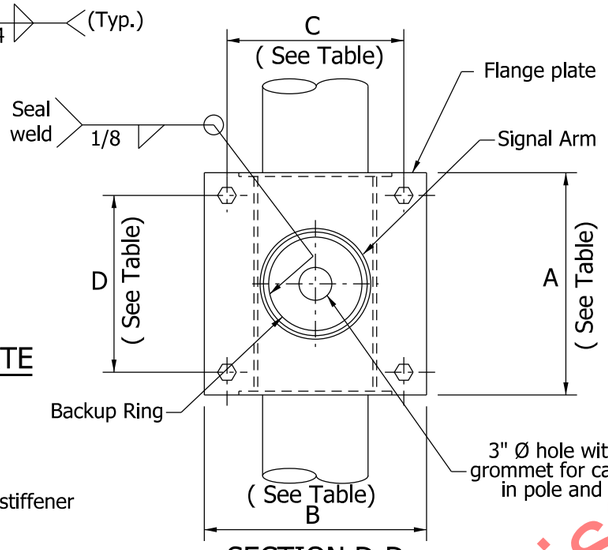

SECTION D-D

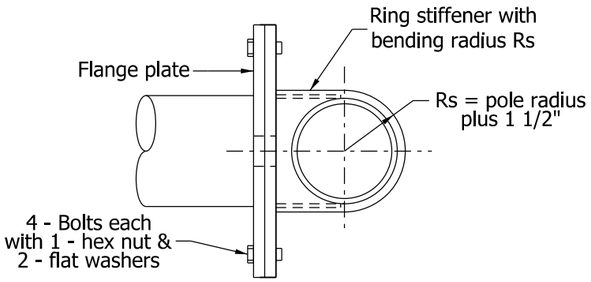

SECTION E-E

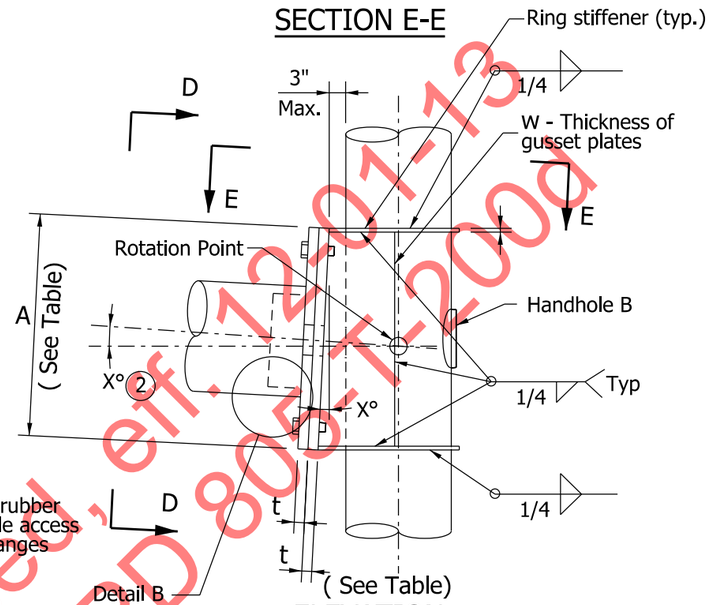

ELEVATION

SIGNAL ARM CONNECTION DETAIL

NOTES:

1. See Standard Drawing E 805-TSCS-06 for Handhole B details.
2. The required signal arm rise shall be built into the gusset plate at the angle X. The angle X is described as arc tan R/L, where R is the arm rise and L is the arm length. Both R and L vary and are listed in the Arm Dimension Table on Standard Drawing E 805-TSCS-03.

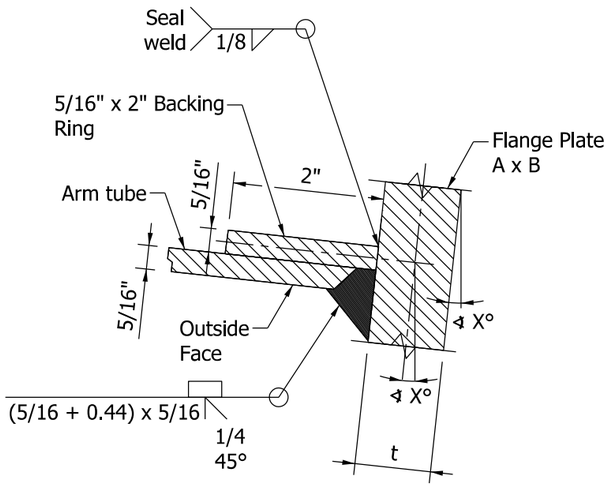

DETAIL B - ARM WELD

PLATES AND BOLTS FOR SIGNAL SINGLE ARM CANTILEVER					
ARM LENGTH	FLANGE PLATE A x B	BOLT PATTERN C x D	RING STIFFNER GUSSET PLATE w	FLANGE PLATE THICKNESS t	BOLT
15' TO 35'	22" X 22"	17 1/2" X 17 1/2"	3/8"	1 1/2"	1 1/8" - 7 UNC x 4 1/4" LONG
>35' TO 60'	33" X 33"	27 1/2" X 27 1/2"	1/2"	1 3/4"	1 1/2" - 6 UNC x 6 1/4" LONG

Revised, ref. 12-01-13
See PPD 805-T-200d

INDIANA DEPARTMENT OF TRANSPORTATION

TRAFFIC SIGNAL CANTILEVER STRUCTURE
SIGNAL ARM CONNECTION DETAILS

SEPTEMBER 2013

STANDARD DRAWING NO. E 805-TSCS-05

ALFREDO B. HANZA REGISTERED No. 60020657 STATE OF INDIANA PROFESSIONAL ENGINEER

/s/ Alfredo B. Hanza 02/05/13
DESIGN STANDARDS ENGINEER DATE

/s/ Mark A. Miller 03/27/13
CHIEF ENGINEER DATE

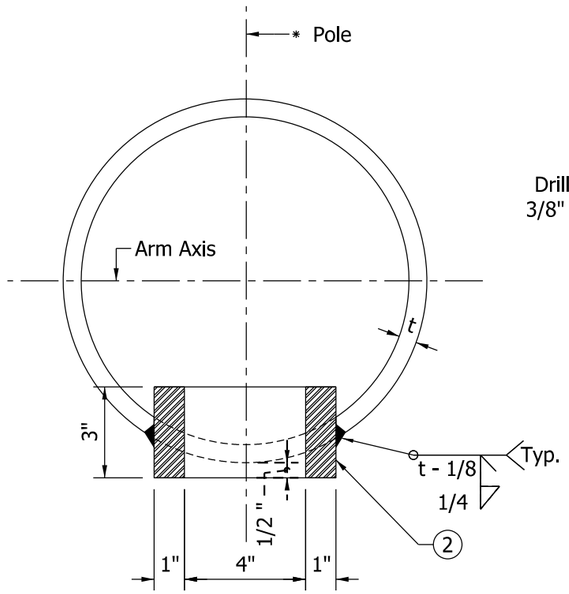

HANDHOLE B
SECTION ACROSS POLE

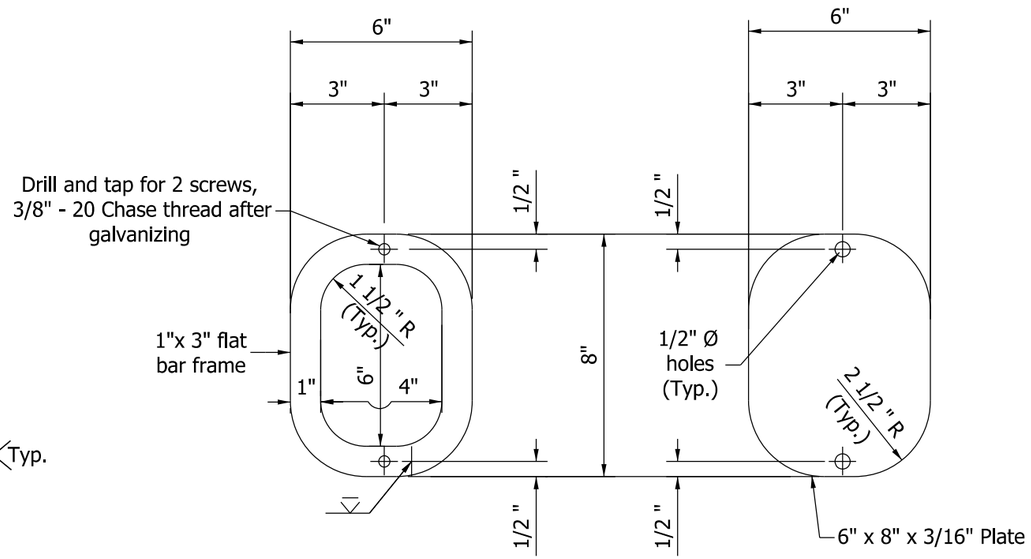

FRAME DETAIL COVER

HANDHOLE B

NOTES:

1 Handhole A shall be used at the base of the pole. Handhole B shall be used at all other locations.

(2) In lieu of fabricated handhole frame as shown, frame may be cut from 3" plate with rolling direction vertical.

3 See Standard Drawings E 805-TSCS-02 and -09 for handhole locations.

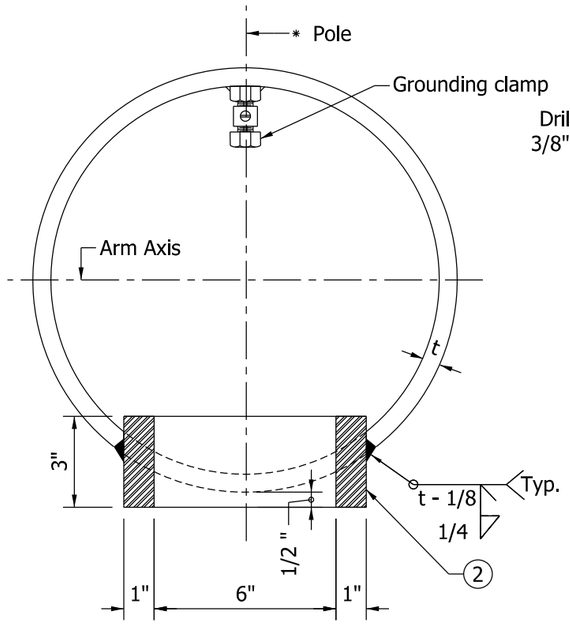

HANDHOLE A
SECTION ACROSS POLE

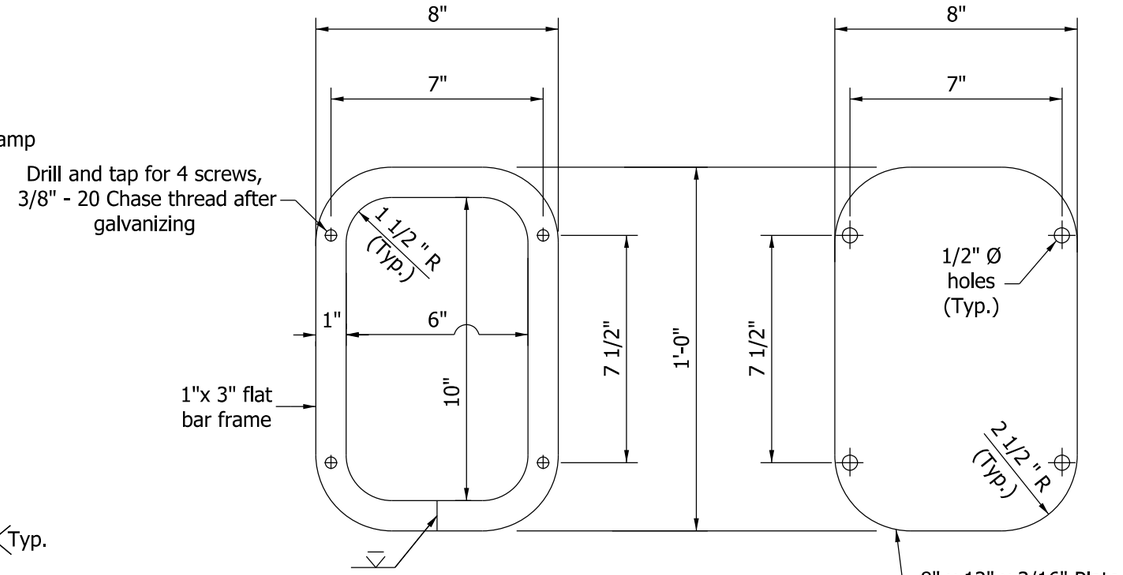

FRAME DETAIL COVER

HANDHOLE A

INDIANA DEPARTMENT OF TRANSPORTATION

TRAFFIC SIGNAL CANTILEVER STRUCTURE
HANDHOLE DETAILS

SEPTEMBER 2013

STANDARD DRAWING NO. E 805-TSCS-06

ALFREDO B. HANZA
REGISTERED
No. 60020657
STATE OF INDIANA
PROFESSIONAL ENGINEER

/s/ Alfredo B. Hanza 02/05/13
DESIGN STANDARDS ENGINEER DATE

/s/ Mark A. Miller 03/27/13
CHIEF ENGINEER DATE

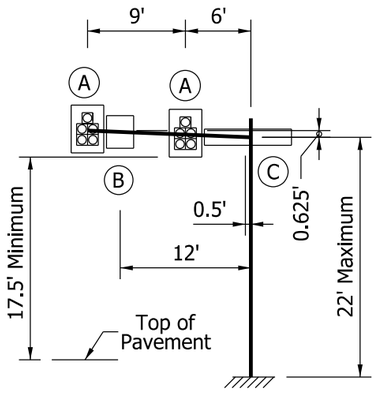

15' ARM

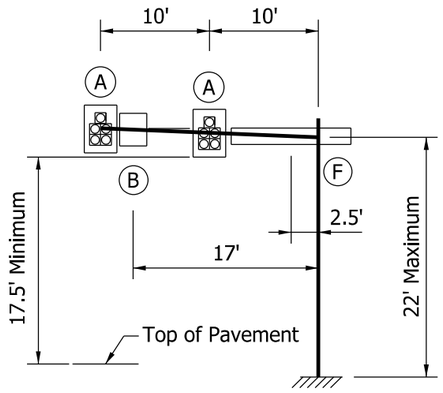

20' ARM

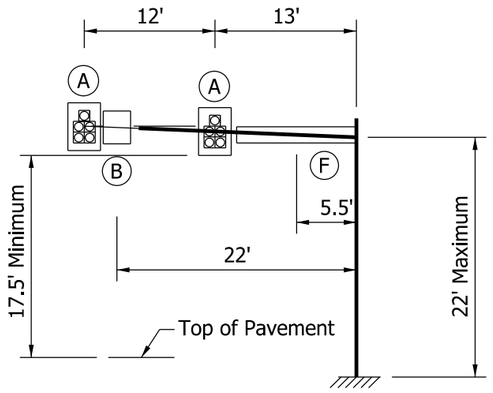

25' ARM

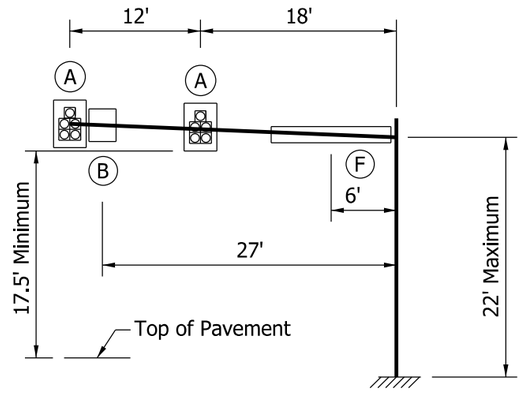

30' ARM

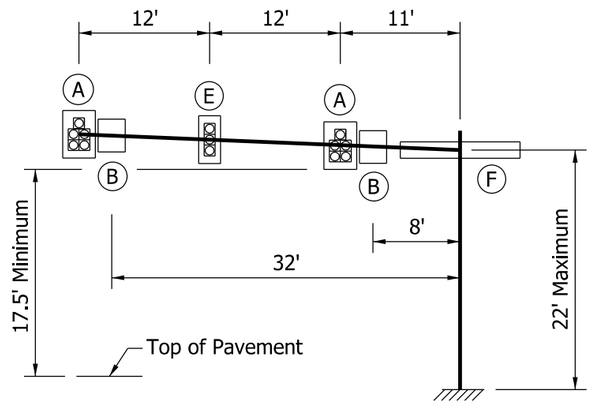

35' ARM

LEGEND	
Device	Description
(A)	12" - 5 Section Signal Head With Backplates
(B)	36" x 30" Regulatory Sign
(C)	18" x 96" Street Name Sign
(E)	12" - 3 Section Signal Head With Backplates
(F)	18" x 132" Street Name Sign

NOTE:

1. The structure arms and pole are designed for the above loading conditions. Foundation types A and C are designed for arms having length of 35 ft or less. See Standard Drawings E 805-TSCS-16 and -18 for foundation types A and C.

INDIANA DEPARTMENT OF TRANSPORTATION

TRAFFIC SIGNAL CANTILEVER STRUCTURE PLACEMENT OF SIGNALS AND SIGNS LOADING FOR ARM OF 35' OR LESS

SEPTEMBER 2013

STANDARD DRAWING NO. E 805-TSCS-07

ALFREDO B. HANZA
REGISTERED
No. 60020657
STATE OF INDIANA
PROFESSIONAL ENGINEER

/s/ Alfredo B. Hanza 02/05/13
DESIGN STANDARDS ENGINEER DATE

/s/ Mark A. Miller 03/27/13
CHIEF ENGINEER DATE

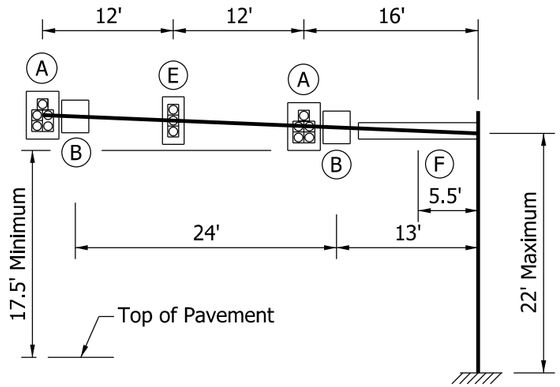

40' ARM

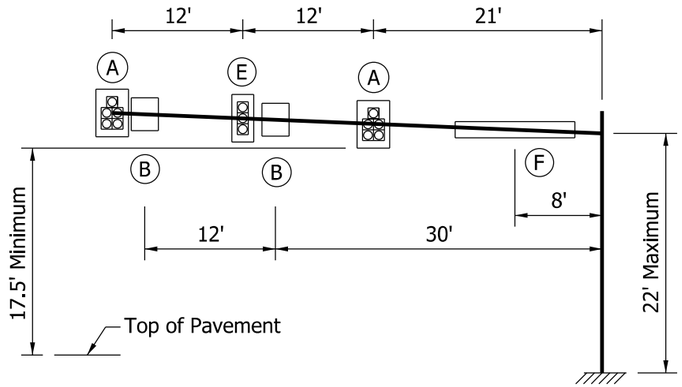

45' ARM

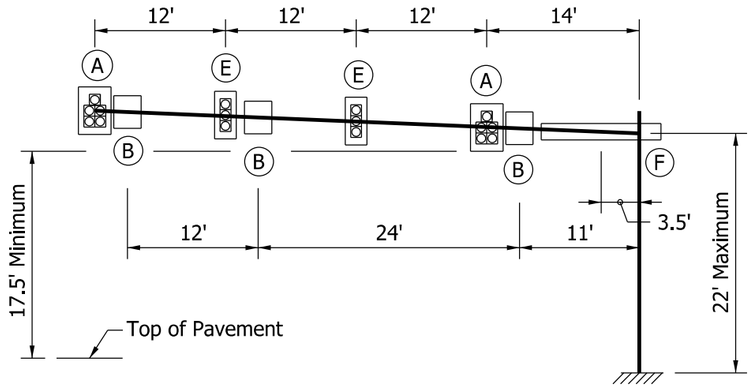

50' ARM

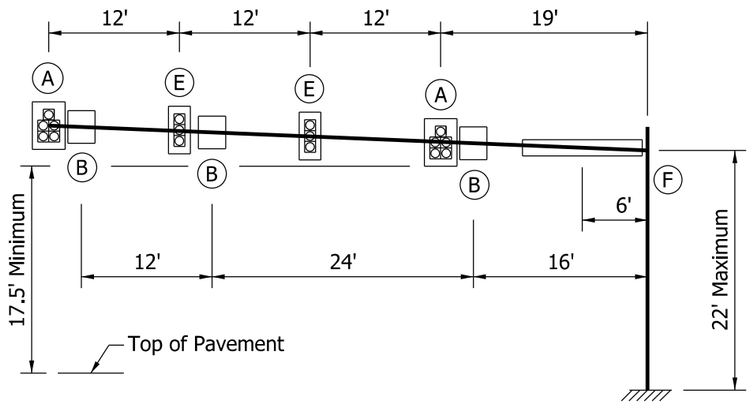

55' ARM

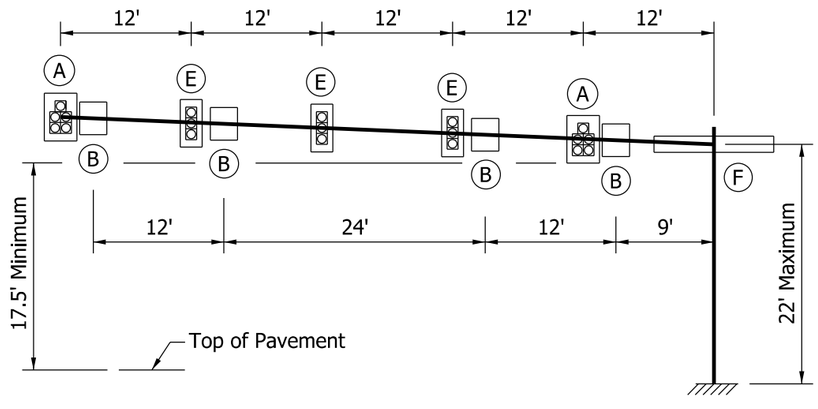

60' ARM

NOTES:

1. See Standard Drawing E 805-TSCS-07 for Legend.
2. The structure arms and pole are designed for the above loading conditions. Foundation types B and D are designed for arms having length of greater than 35 ft to 60 ft. See Standard Drawings E 805-TSCS-17 and -19 for foundation types B and D.

INDIANA DEPARTMENT OF TRANSPORTATION

TRAFFIC SIGNAL CANTILEVER STRUCTURE PLACEMENT OF SIGNALS AND SIGNS LOADING FOR ARM OF GREATER THAN 35' TO 60'

SEPTEMBER 2013

STANDARD DRAWING NO. E 805-TSCS-08

ALFREDO B. HANZA
REGISTERED
No. 60020657
STATE OF INDIANA
PROFESSIONAL ENGINEER

/s/ Alfredo B. Hanza	02/05/13
DESIGN STANDARDS ENGINEER	DATE
/s/ Mark A. Miller	03/27/13
CHIEF ENGINEER	DATE

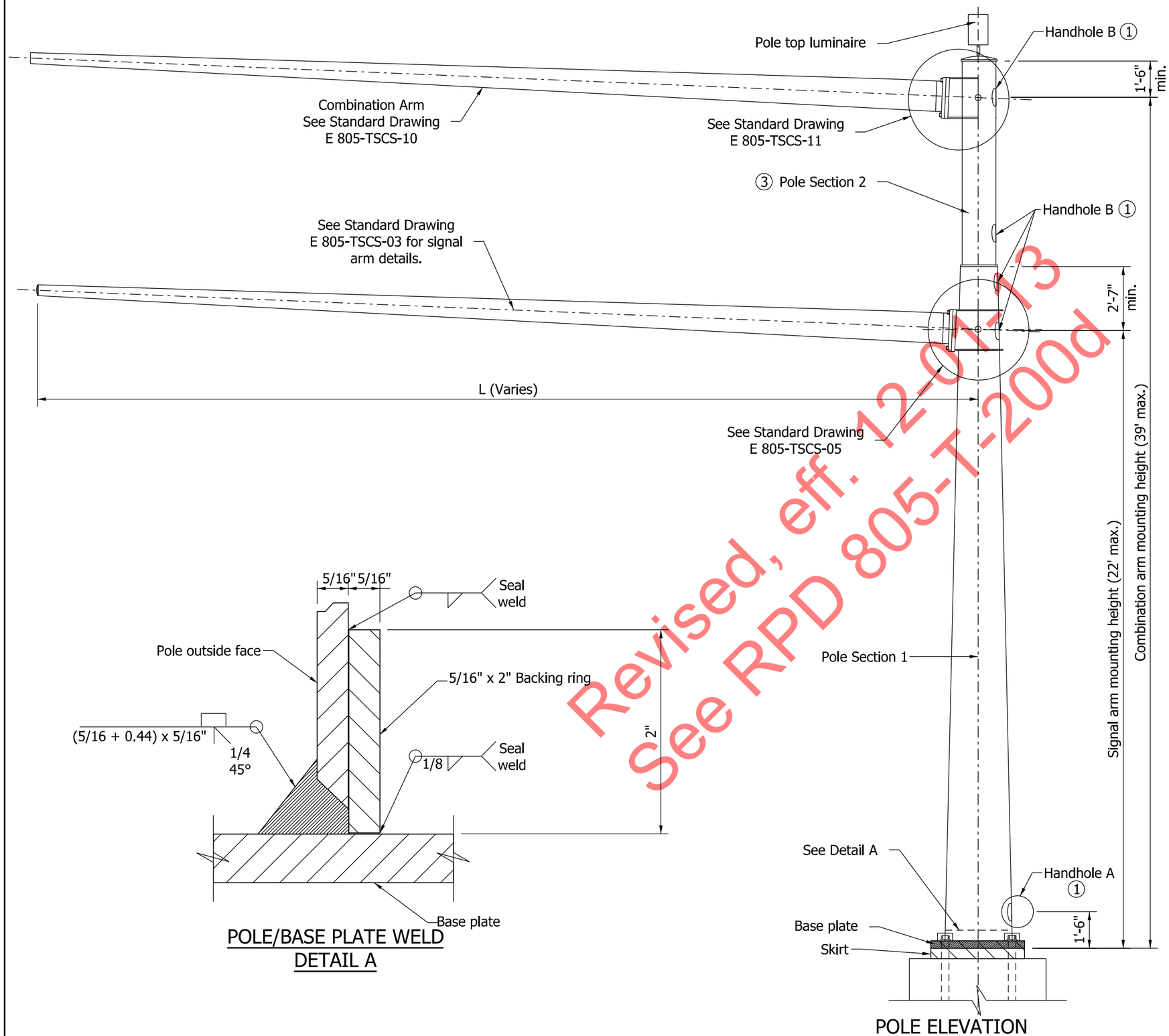

POLE/BASE PLATE WELD
DETAIL A

NOTES:

(1) See Standard Drawing E 805-TSCS-06 for handhole details.

2. See Standard Drawing E 805-SGGR-01 to -03 for grounding details.

(3) Base diameter of Pole Section 2 shall be equal to top diameter of Pole Section 1.

VERTICAL CLEARANCE CRITERIA:

Maintain 40'-0" minimum clearance from top of pavement to the camera lens.

POLE DIMENSIONS

CANTILEVER ARM LENGTH L	POLE SECTION 1		POLE SECTION 2	
	BASE DIAMETER	WALL THICKNESS	BASE DIAMETER	WALL THICKNESS
15' to 35'	17"	5/16"	See Note (3)	1/8"
>35' to 60'	24"	5/16"	See Note (3)	1/8"

Revised, eff. 12-01-13
See RPD 805-T-200d

INDIANA DEPARTMENT OF TRANSPORTATION

TRAFFIC SIGNAL CANTILEVER STRUCTURE
COMBINATION POLE ELEVATION,
DIMENSIONS, AND BASE PLATE WELD DETAIL
SEPTEMBER 2013

STANDARD DRAWING NO. E 805-TSCS-09

ALFREDO B. HANZA
REGISTERED
No. 60020657
STATE OF INDIANA
PROFESSIONAL ENGINEER

/s/ Alfredo B. Hanza 02/05/13
DESIGN STANDARDS ENGINEER DATE

/s/ Mark A. Miller 03/27/13
CHIEF ENGINEER DATE

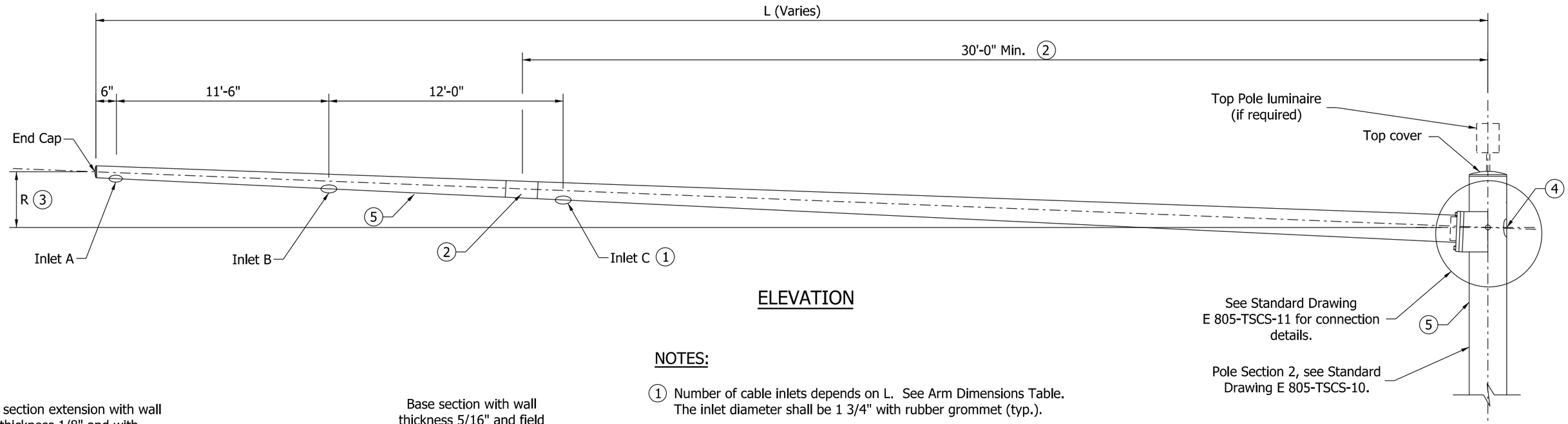

ELEVATION

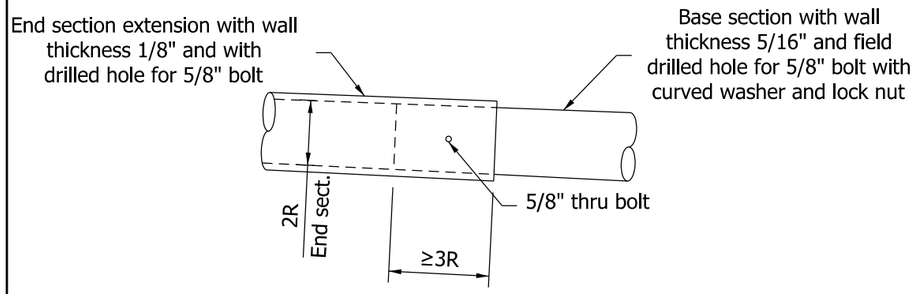

(2) OPTIONAL ARM SPLICE DETAIL

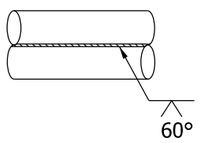

(5) TYPICAL SEAM WELD

NOTES:

(1) Number of cable inlets depends on L. See Arm Dimensions Table. The inlet diameter shall be 1 3/4" with rubber grommet (typ.).

(2) Optional splice can be used for arm length of greater than 40 ft. Field assembly shall achieve a snug tight joint having overlap not less than 1.5 times the inside dimension of the end section.

(3) Arm rise R is measured in the undeflected position without vertical loads on the arm.

(4) See Standard Drawing E 805-TSCS-06 for handhole details.

(5) If seam welds are used, the weld location for the arms shall be along the bottom, and on the side of the pole as shown.

ARM DIMENSIONS TABLE

L	ARM DIAMETER AT POLE	ARM WALL THICKNESS	R (3)	CABLE INLETS (1)
15'	5 1/2"	1/8"	7 1/2"	A
20'	5 1/2"	1/8"	10"	A
25'	7"	1/8"	1'-0 1/2"	A
30'	8"	1/8"	1'-3"	A, B
35'	8"	1/8"	1'-5 1/2"	A, B
40'	9"	1/8"	1'-8"	A, B, C
45'	10"	1/8"	1'-10 1/2"	A, B, C
50'	11"	1/8"	2'-1"	A, B, C
55'	11"	1/8"	2'-3 1/2"	A, B, C
60'	12"	1/8"	2'-6"	A, B, C

INDIANA DEPARTMENT OF TRANSPORTATION

TRAFFIC SIGNAL CANTILEVER STRUCTURE
COMBINATION ARM DIMENSIONS & DETAILS

SEPTEMBER 2013

STANDARD DRAWING NO. E 805-TSCS-10

ALFREDO B. HANZA REGISTERED No. 60020657 STATE OF INDIANA PROFESSIONAL ENGINEER

/s/ Alfredo B. Hanza 02/05/13
DESIGN STANDARDS ENGINEER DATE

/s/ Mark A. Miller 03/27/13
CHIEF ENGINEER DATE

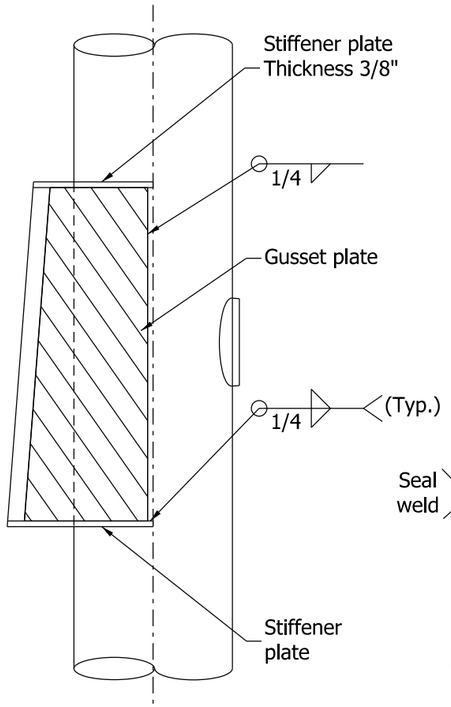

ELEVATION OF GUSSET PLATES

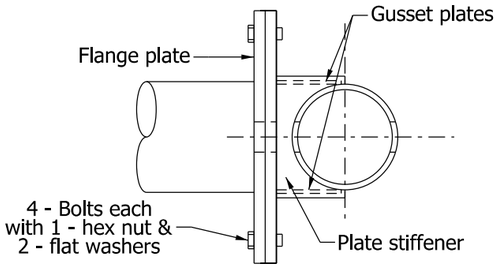

SECTION G-G

NOTES:

1. See Standard Drawing E 805-TSCS-06 for handhole details.
2. The required combination arm rise shall be built into the gusset plate at the angle X. The angle X is described as arc tan R/L, where R is the combination arm rise and L is the arm length. Both R and L vary and are listed in the Arm Dimensions Table on Standard Drawing E 805-TSCS-03.

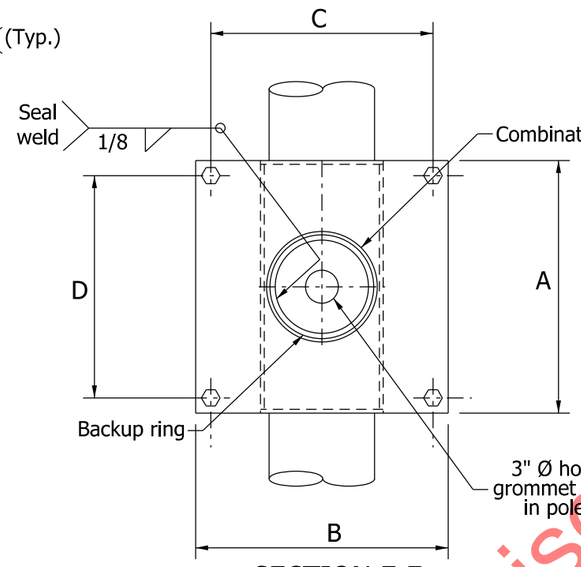

SECTION F-F

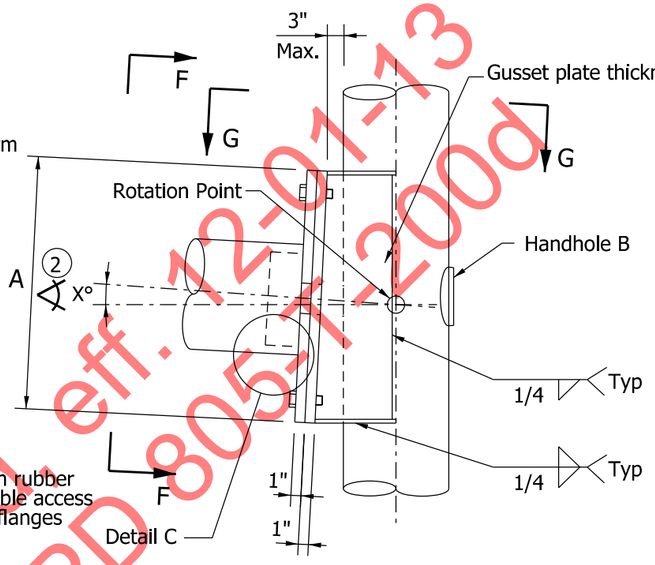

ELEVATION

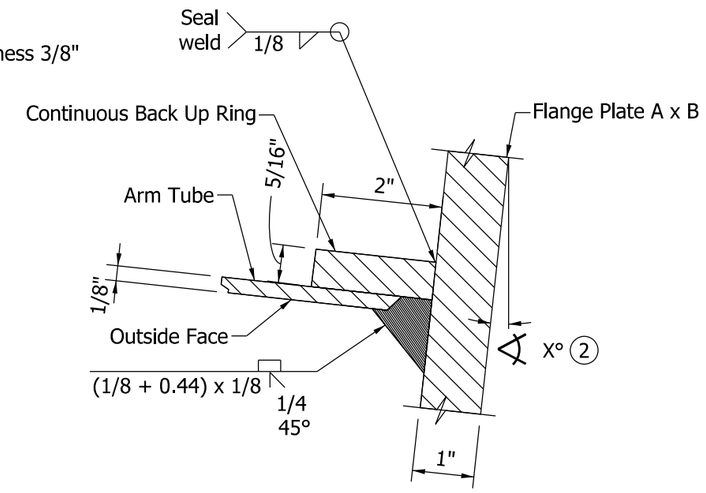

DETAIL C - ARM WELD

COMBINATION ARM CONNECTION DETAIL

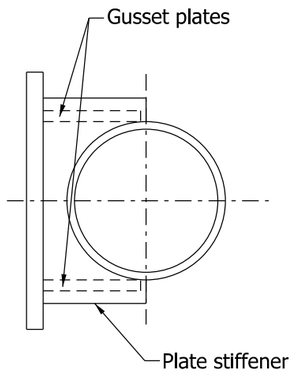

TOP OF GUSSET PLATES

PLATES AND BOLTS FOR COMBINATION ARM CANTILEVER				
ARM LENGTH	FLANGE PLATE A x B	BOLT PATTERN C x D	FLANGE PLATE THICKNESS	BOLT
15' TO 35'	20" x 20"	17" x 17"	1"	7/8" - 9 UNC x 3.5" LONG
>35' TO 60'	25" x 25"	22" x 22"	1"	7/8" - 9 UNC x 3.5" LONG

Revised, eff. 12-01-13
See RPD 805-T-200d

INDIANA DEPARTMENT OF TRANSPORTATION

TRAFFIC SIGNAL CANTILEVER STRUCTURE
COMBINATION ARM CONNECTION DETAILS

SEPTEMBER 2013

STANDARD DRAWING NO. E 805-TSCS-11

ALFREDO B. HANZA
REGISTERED
No. 60020657
STATE OF INDIANA
PROFESSIONAL ENGINEER

/s/ Alfredo B. Hanza 02/05/13
DESIGN STANDARDS ENGINEER DATE

/s/ Mark A. Miller 03/27/13
CHIEF ENGINEER DATE

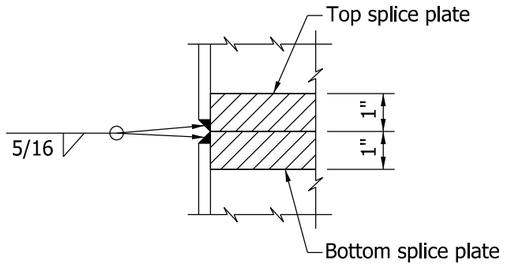

WELD DETAIL D

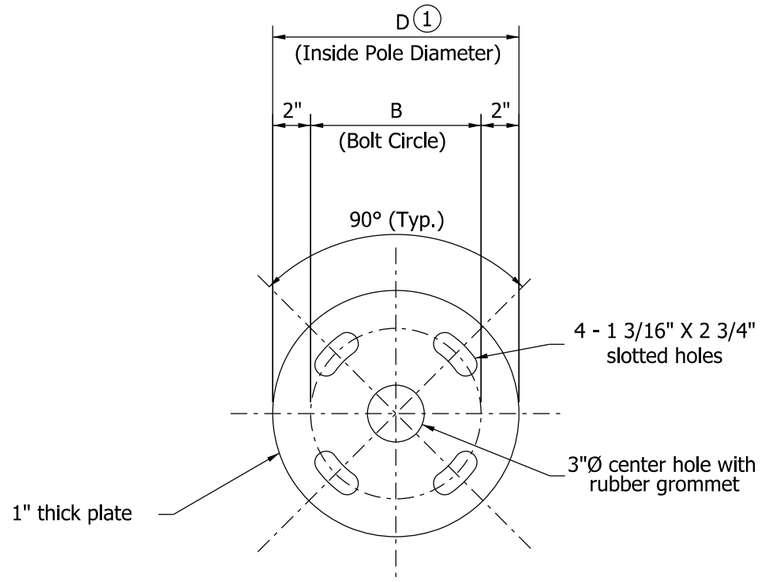

TOP SPLICE PLATE

NOTES:

1. See Standard Drawing E 805-TSCS-09 for pole dimensions.
2. See Standard Drawings E 805-TSCS-04 and -13 for bottom splice plate details.
3. Diameter at the bottom of Pole Section 2 shall match the diameter at the top of Pole Section 1.

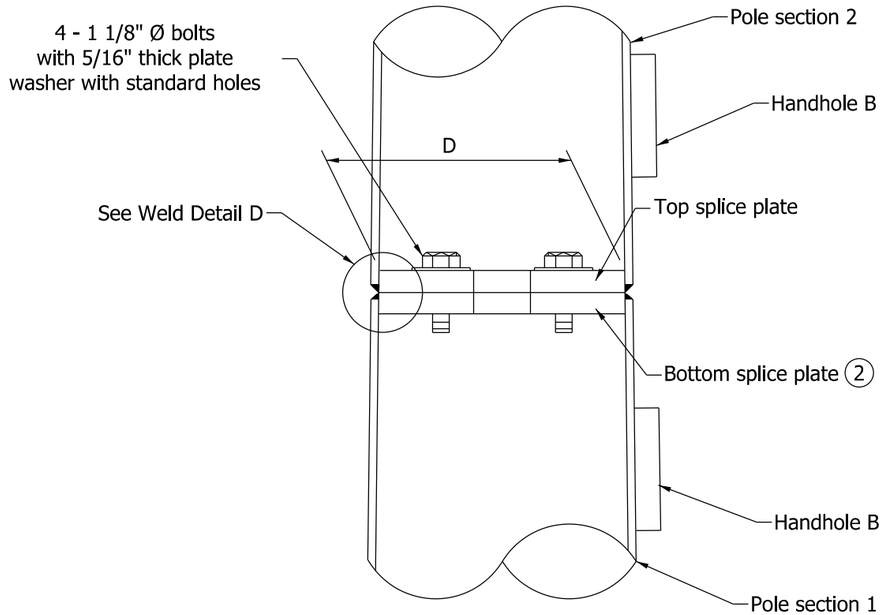

ELEVATION

INDIANA DEPARTMENT OF TRANSPORTATION

TRAFFIC SIGNAL CANTILEVER STRUCTURE
COMBINATION POLE SPLICE DETAILS
FOR ARMS 35' OR LESS

SEPTEMBER 2013

STANDARD DRAWING NO. E 805-TSCS-12

ALFREDO B. HANZA
REGISTERED
No.
60020657
STATE OF
INDIANA
PROFESSIONAL ENGINEER

/s/ Alfredo B. Hanza 02/05/13
DESIGN STANDARDS ENGINEER DATE

/s/ Mark A. Miller 03/27/13
CHIEF ENGINEER DATE

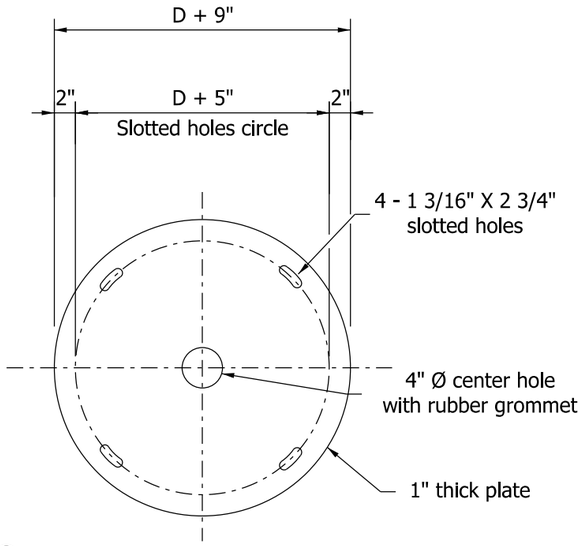

③ TOP CONNECTION PLATE

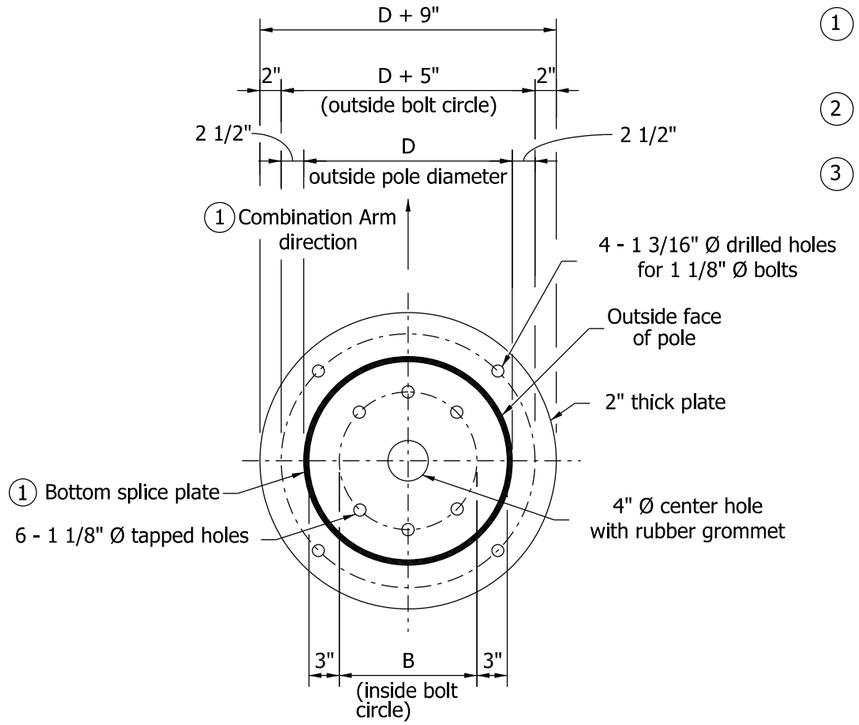

② BOTTOM CONNECTION PLATE

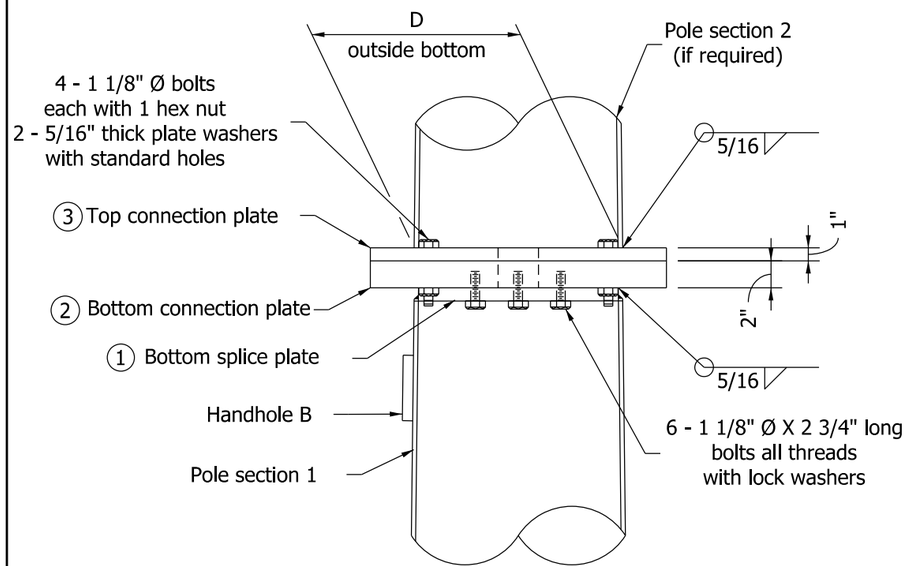

ELEVATION

NOTES:

1. Orient bottom splice and bottom connection plates with combination arm as shown on the bottom splice plate detail on Standard Drawings E 805-TSCS-04 and -12.
2. All plate dimensions shall be based upon the outside diameter D at the top of pole section 1.
3. Diameter at bottom of pole section 2 shall match the diameter at the top of pole section 1.

INDIANA DEPARTMENT OF TRANSPORTATION

TRAFFIC SIGNAL CANTILEVER STRUCTURE
COMBINATION POLE SPLICE DETAILS
FOR ARM OF GREATER THAN 35' TO 60'
SEPTEMBER 2013

STANDARD DRAWING NO. E 805-TSCS-13

ALFREDO B. HANZA
REGISTERED
No. 60020657
STATE OF INDIANA
PROFESSIONAL ENGINEER

/s/ Alfredo B. Hanza 02/05/13
DESIGN STANDARDS ENGINEER DATE

/s/ Mark A. Miller 03/27/13
CHIEF ENGINEER DATE

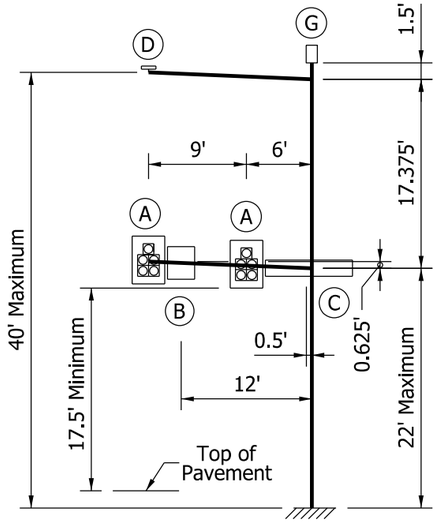

15' ARM

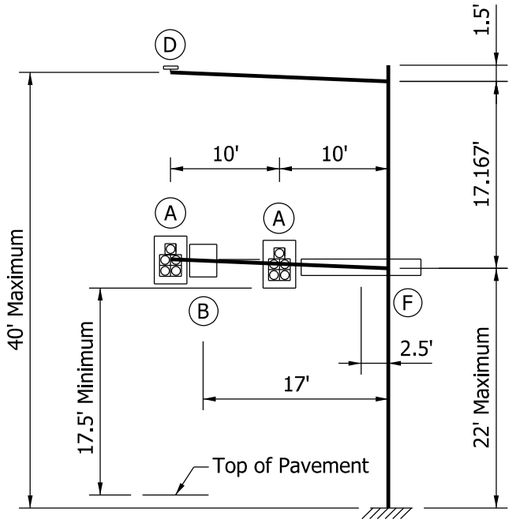

20' ARM

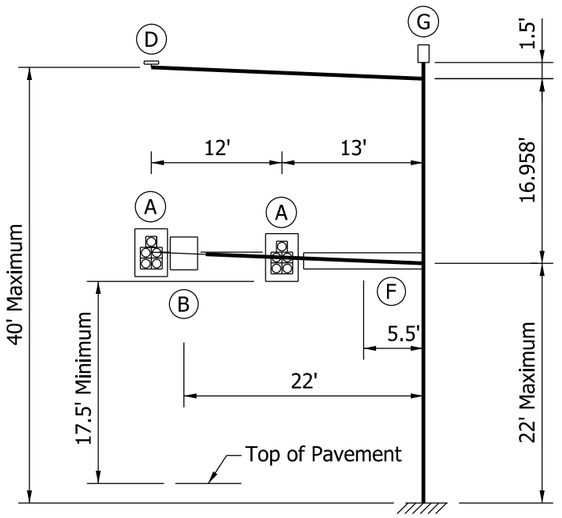

25' ARM

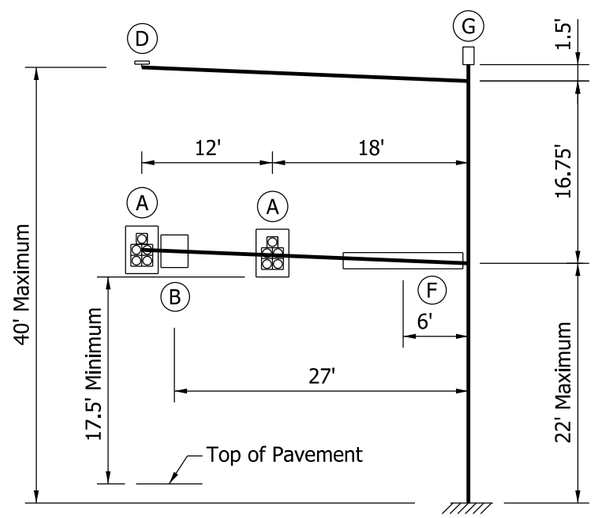

30' ARM

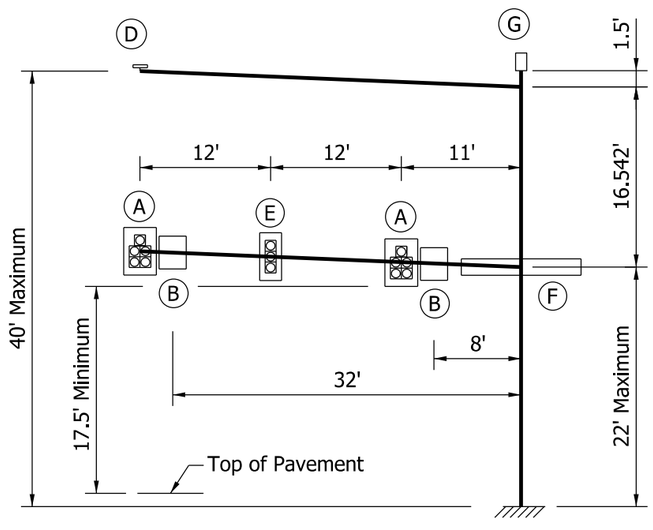

35' ARM

LEGEND	
DEVICE	DESCRIPTION
A	12" - 5 Section Signal Head With Backplates
B	36" x 30" Regulatory Sign
C	18" x 96" Street Name Sign
D	1 - Mounted Camera
E	12" - 3 Section Signal Head With Backplates
F	18" x 132" Street Name Sign
G	Top Pole Luminaire

NOTE:

1. The structure arms and pole are designed for the above loading conditions. Foundation types A and C are designed for arms having length of 35 ft or less. See Standard Drawings E 805-TSCS-16 and -18 for foundation types A and C.

INDIANA DEPARTMENT OF TRANSPORTATION

TRAFFIC SIGNAL CANTILEVER STRUCTURE COMBINATION ARM LOADING FOR ARM OF 35' OR LESS

SEPTEMBER 2013

STANDARD DRAWING NO. E 805-TSCS-14

ALFREDO B. HANZA
REGISTERED
No.
60020657
STATE OF
INDIANA
PROFESSIONAL ENGINEER

/s/ Alfredo B. Hanza 02/05/13
DESIGN STANDARDS ENGINEER DATE

/s/ Mark A. Miller 03/27/13
CHIEF ENGINEER DATE

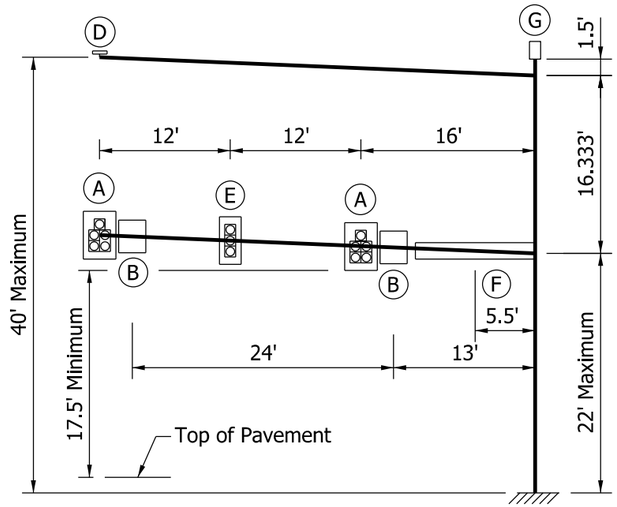

40' ARM

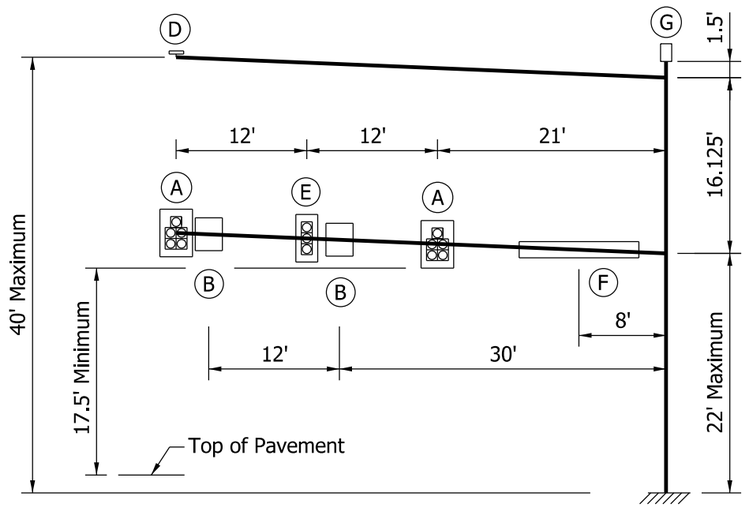

45' ARM

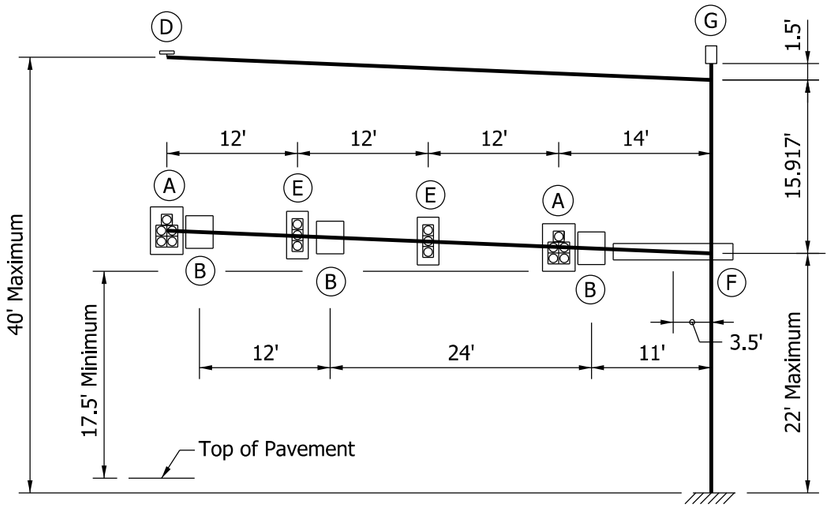

50' ARM

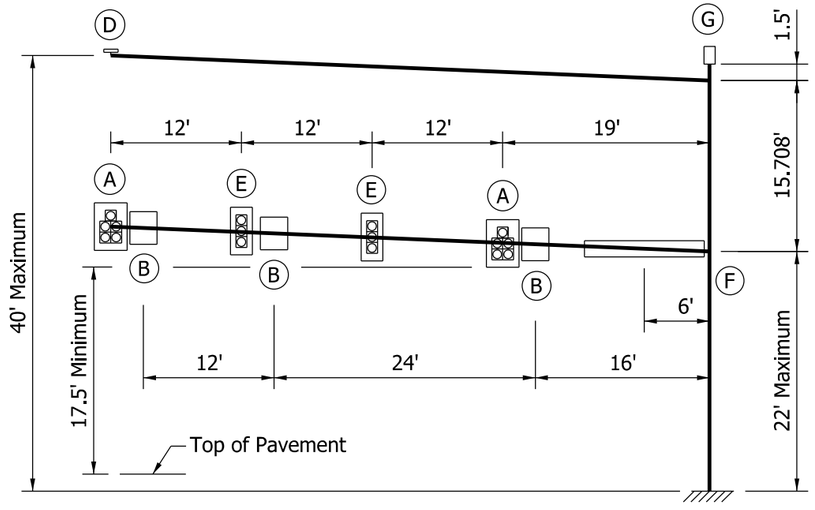

55' ARM

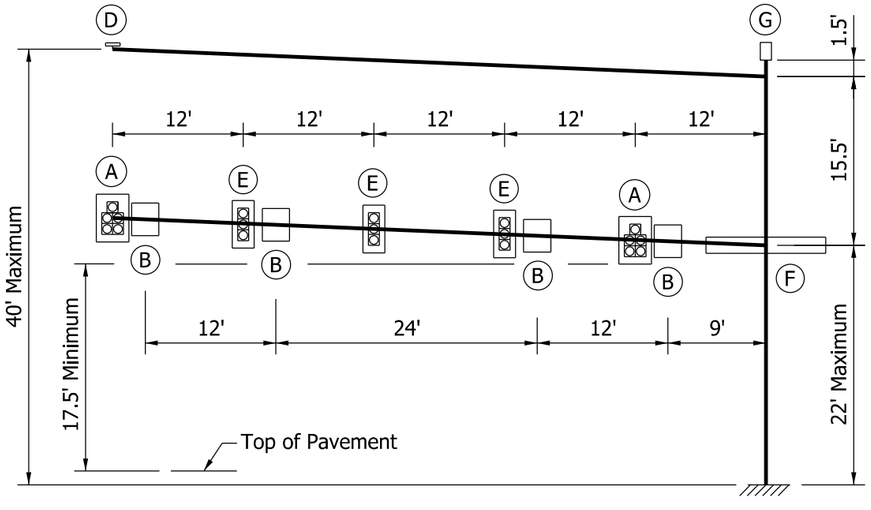

60' ARM

NOTES:

1. See Standard Drawing E 805-TSCS-14 for Legend.
2. The structure arms and pole are designed for the above loading conditions. Foundation types B and D are designed for arms having length of greater than 35 ft to 60 ft. See Standard Drawings E 805-TSCS-17 and -19 for foundation types B and D.

INDIANA DEPARTMENT OF TRANSPORTATION

TRAFFIC SIGNAL CANTILEVER STRUCTURE
COMBINATION ARM LOADING
FOR ARM OF GREATER THAN 35' TO 60'
SEPTEMBER 2013

STANDARD DRAWING NO. E 805-TSCS-15

ALFREDO B. HANZA
REGISTERED
No. 60020657
STATE OF INDIANA
PROFESSIONAL ENGINEER

/s/ Alfredo B. Hanza 02/05/13
DESIGN STANDARDS ENGINEER DATE

/s/ Mark A. Miller 03/27/13
CHIEF ENGINEER DATE

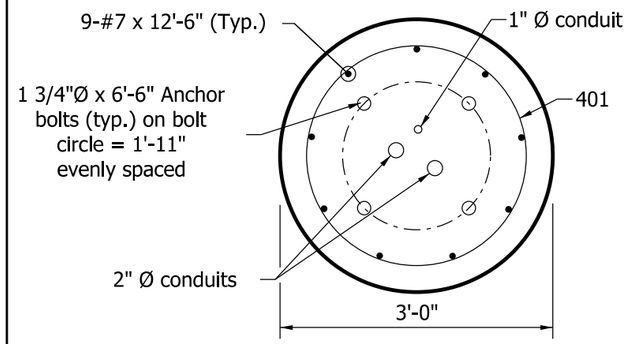

SECTION H-H

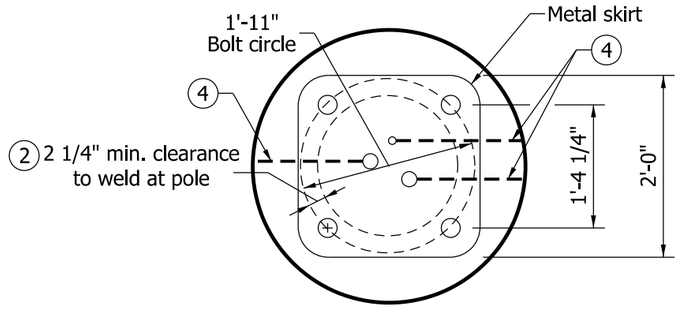

PLAN

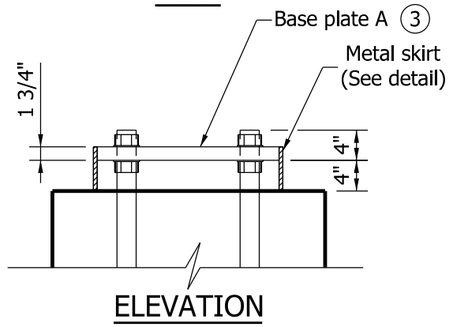

ELEVATION

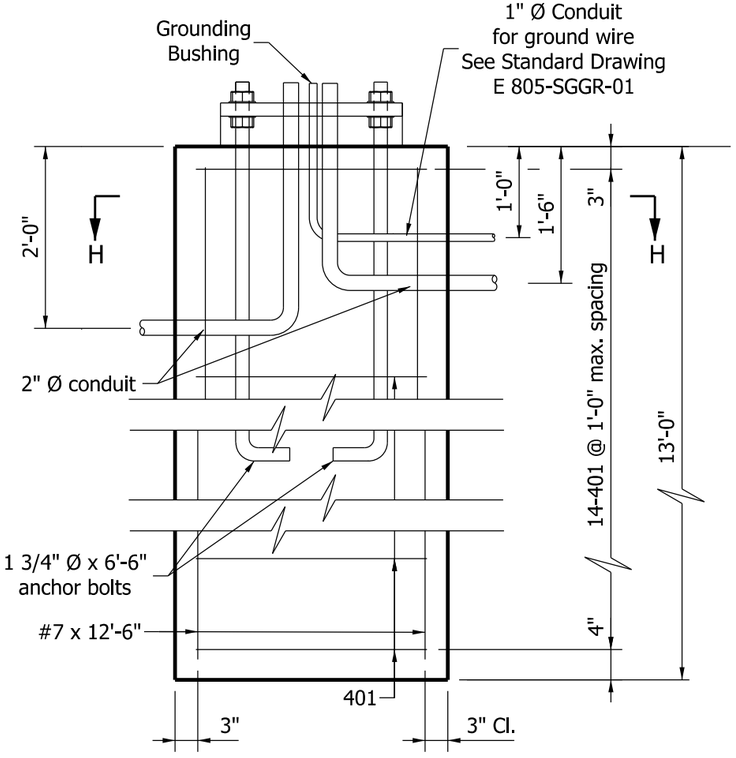

SHAFT SECTION

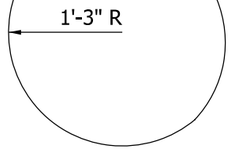

401 X 9'-5"

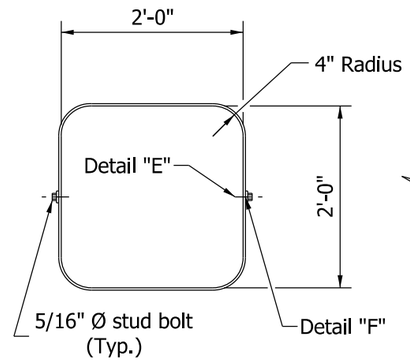

METAL SKIRT DETAIL

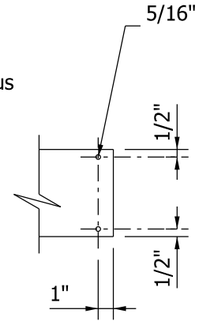

DETAIL E

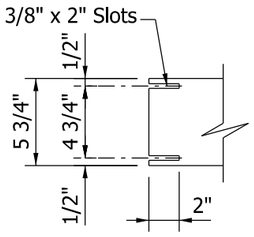

DETAIL F

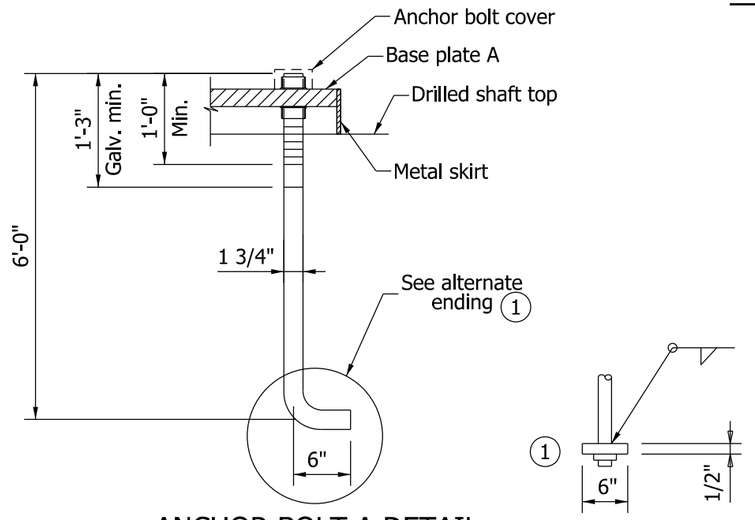

ANCHOR BOLT A DETAIL

BILL OF MATERIALS DRILLED SHAFT TYPE A

REINFORCING BARS			
SIZE OR MARK	NUMBER OF BARS	LENGTH (ft.)	WEIGHT (lbs.)
#7	9	12'-6"	
Total #7			230
401	14	9'-5"	
Total #4			88
Total Reinforcing Bars			318
CONCRETE			
Concrete, Class A			3.4 CYS

NOTES:

1. Alternate 6" x 6" x 1/2" square washer with hex nut welded to lower end may be substituted for bent anchor bolt.
2. Bolt circle, b, shall allow clearance for the plate washer. Cutting or trimming the washer will not be allowed.
3. See Standard Drawing E 805-TSCS-04 for base plate A details.
4. A tooled line or other type of permanent marking shall be provided on the top of the foundation to indicate the direction of the conduit.

INDIANA DEPARTMENT OF TRANSPORTATION

TRAFFIC SIGNAL CANTILEVER STRUCTURE DRILLED SHAFT FOUNDATION TYPE A FOR ARM OF 35' OR LESS

SEPTEMBER 2013

STANDARD DRAWING NO. E 805-TSCS-16

ALFREDO B. HANZA REGISTERED No. 60020657 STATE OF INDIANA PROFESSIONAL ENGINEER

/s/ Alfredo B. Hanza 02/05/13
DESIGN STANDARDS ENGINEER DATE

/s/ Mark A. Miller 03/27/13
CHIEF ENGINEER DATE

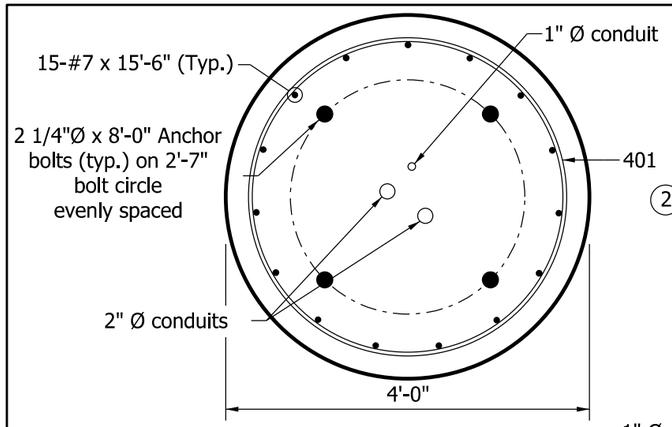

SECTION I-I

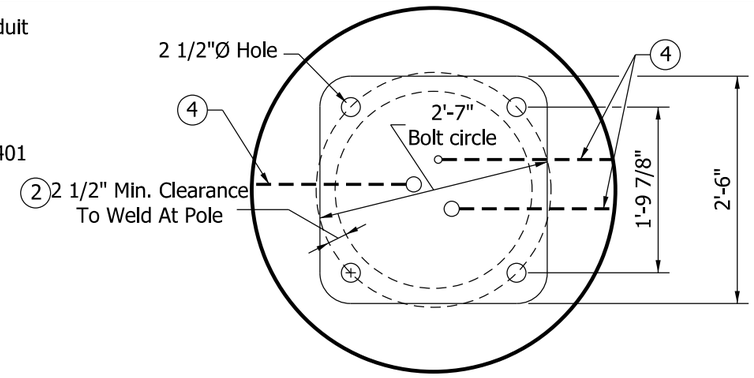

PLAN

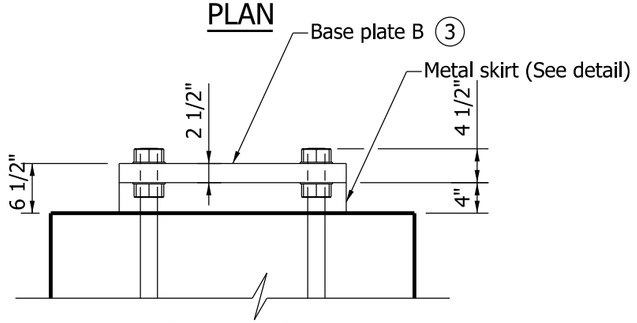

ELEVATION

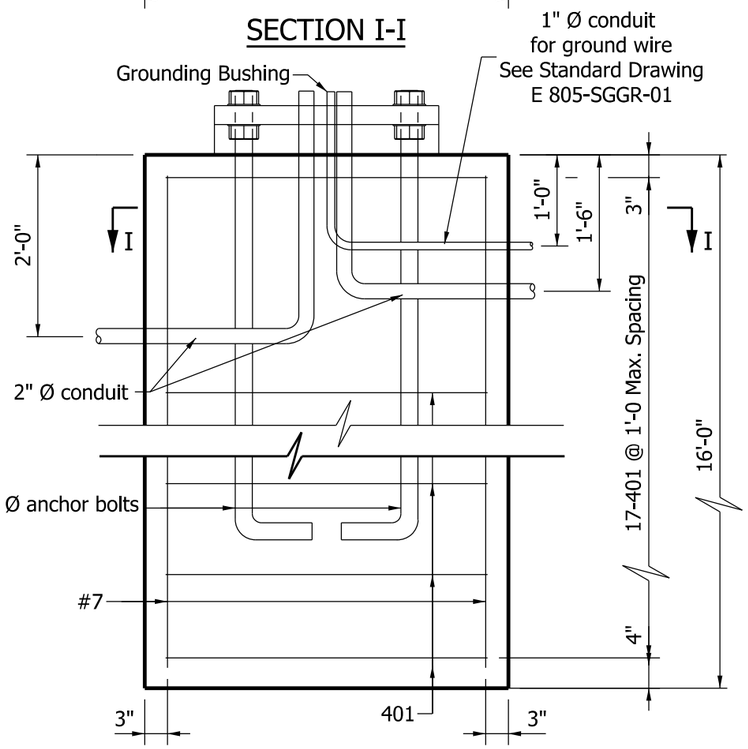

SHAFT SECTION

NOTES:

1. Alternate 8" x 8" x 1/2" square plate tapped and welded to the anchor bolt may be substituted for bent anchor bolt.
2. Bolt circle, b, shall allow clearance for the plate washer. Cutting or trimming the washer will not be allowed.
3. See Standard Drawing E 805-TSCS-04 for base plate B details.
4. A tooled line or other type of permanent marking shall be provided on the top of the foundation to indicate the direction of the conduits.

BILL OF MATERIALS
DRILLED SHAFT
TYPE B

REINFORCING BARS			
SIZE OR MARK	NUMBER OF BARS	LENGTH	WEIGHT (lbs.)
#7	15	15'-6"	
Total #7			475
401	17	12'-6"	
Total #4			142
Total Reinforcing Bars			617
CONCRETE			
Concrete, Class A			7.5 CYS

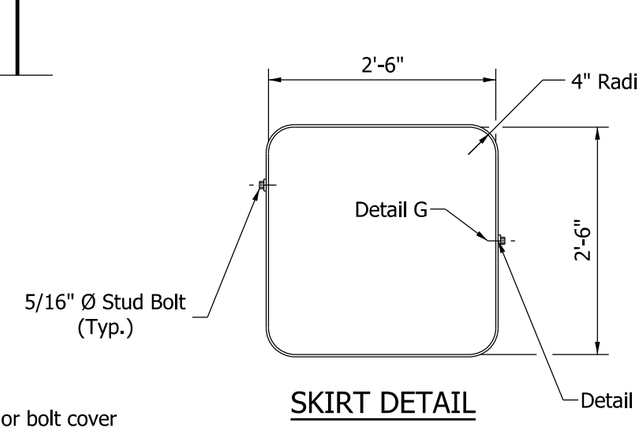

SKIRT DETAIL

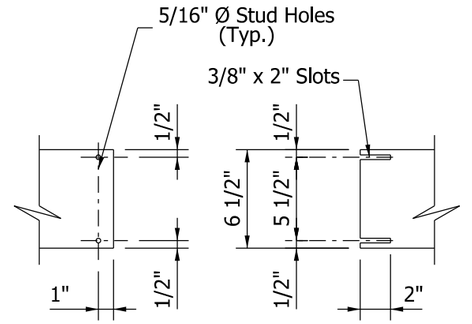

DETAIL G DETAIL H

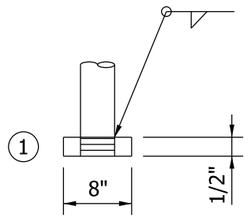

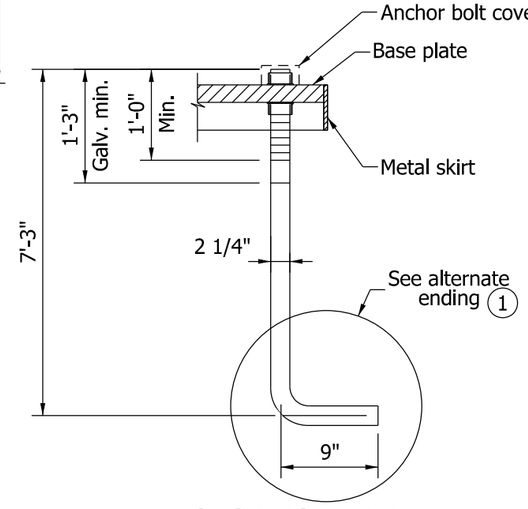

ANCHOR BOLT B DETAIL

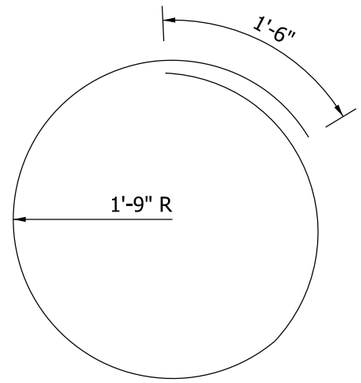

401 X 12'-6"

INDIANA DEPARTMENT OF TRANSPORTATION

TRAFFIC SIGNAL CANTILEVER STRUCTURE
DRILLED SHAFT FOUNDATION TYPE B
FOR ARM OF GREATER THAN 35' TO 60'
SEPTEMBER 2013

STANDARD DRAWING NO. E 805-TSCS-17

ALFREDO B. HANZA REGISTERED No. 60020657 STATE OF INDIANA PROFESSIONAL ENGINEER

/s/ Alfredo B. Hanza 02/05/13
DESIGN STANDARDS ENGINEER DATE

/s/ Mark A. Miller 03/27/13
CHIEF ENGINEER DATE

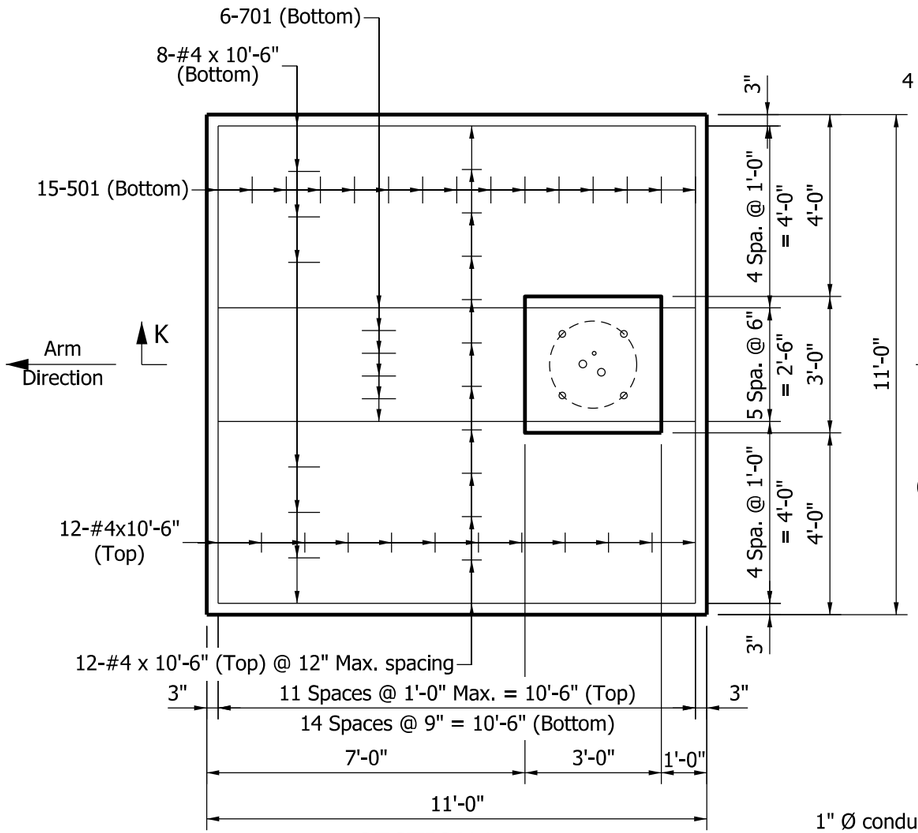

SECTION L-L

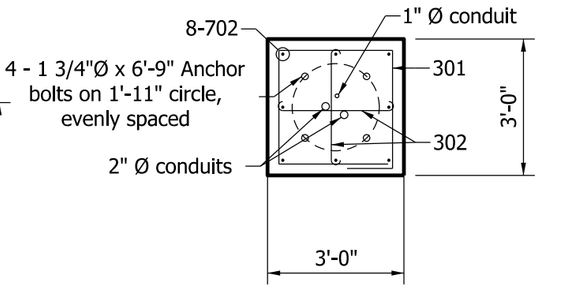

SECTION J-J

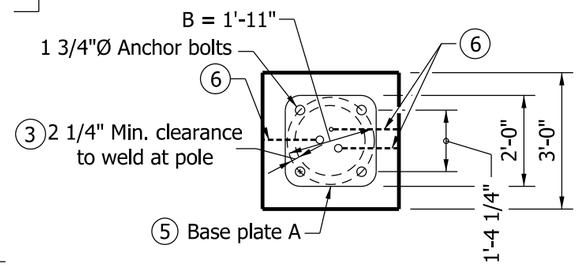

PLAN

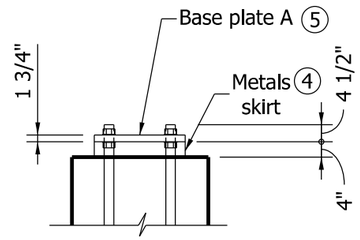

ELEVATION

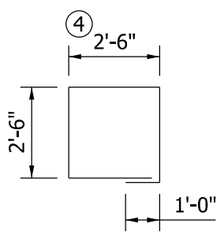

301 x 11'-0"

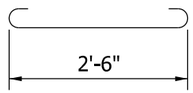

302 x 3'-4"

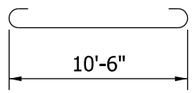

501 x 11'-8"

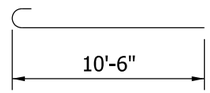

701 x 11'-4"

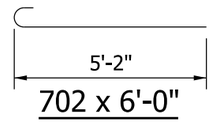

702 x 6'-0"

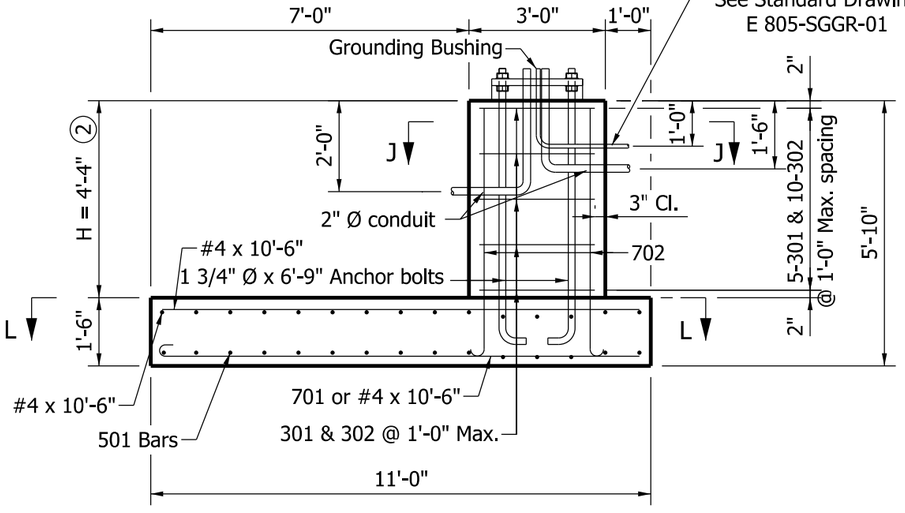

SECTION K-K

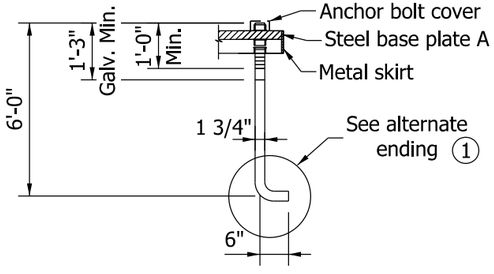

ANCHOR BOLT C DETAIL

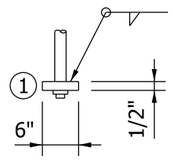

NOTES:

1. Alternate 6" x 6" x 1/2" square washer with hex nut welded to lower end may be substituted for the bend in the anchor bolt.
2. Minimum H required is 4 ft. soil cover over the entire footing area.
3. Bolt circle, B, shall allow clearance for the plate washer. Cutting or trimming the washer will not be allowed.
4. See Standard Drawing E 805-TSCS-16 for metal skirt details.
5. See Standard Drawing E 805-TSCS-04 for base plate A details.
6. A tooled line or other type of permanent marking shall be provided on the top of the foundation to indicate the direction of the conduits.

BILL OF MATERIALS SPREAD FOOTING TYPE C

REINFORCING BARS			
SIZE OR MARK	NUMBER OF BARS	LENGTH	WEIGHT (lbs.)
701	6	11'-4"	
702	8	6'-0"	
Total #7			237
501	15	11'-8"	
Total #5			183
#4	32	10'-6"	
Total #4			224
301	5	11'-0"	
302	10	3'-4"	
Total #3			33
Total Reinforcing Bars			677
CONCRETE			
Concrete, Class A			8.2 CYS

INDIANA DEPARTMENT OF TRANSPORTATION

TRAFFIC SIGNAL CANTILEVER STRUCTURE SPREAD FOOTING FOUNDATION TYPE C FOR ARM OF 35' OR LESS

SEPTEMBER 2013

STANDARD DRAWING NO. E 805-TSCS-18

ALFREDO B. HANZA REGISTERED No. 60020657 STATE OF INDIANA PROFESSIONAL ENGINEER

/s/ Alfredo B. Hanza 02/05/13
DESIGN STANDARDS ENGINEER DATE

/s/ Mark A. Miller 03/27/13
CHIEF ENGINEER DATE

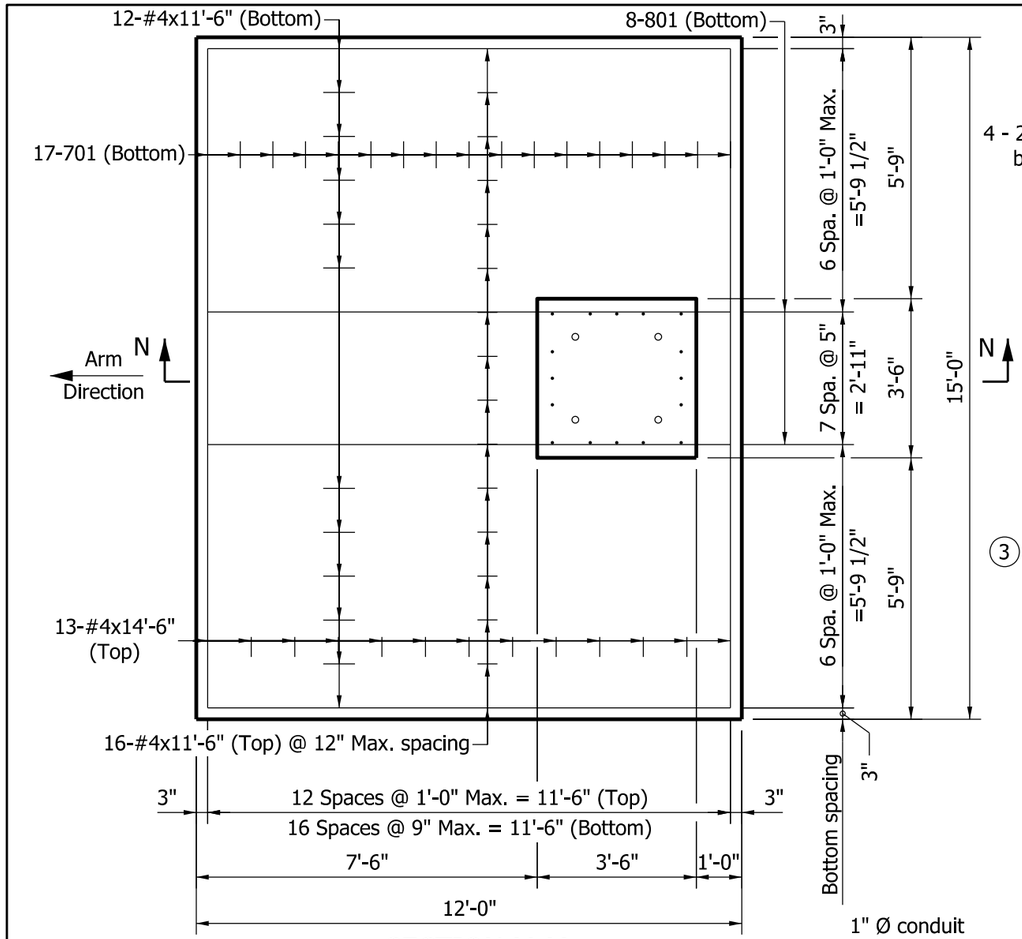

SECTION M-M

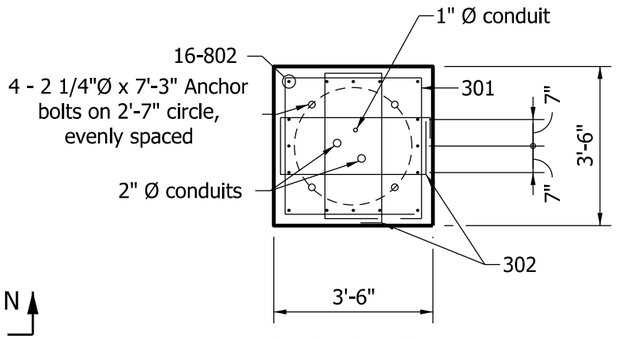

SECTION O-O

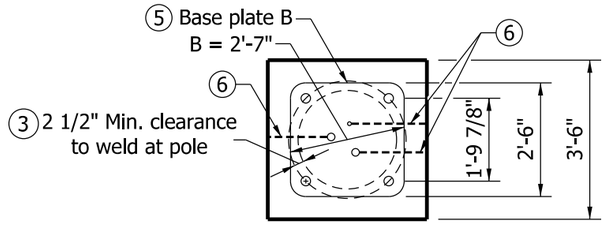

PLAN

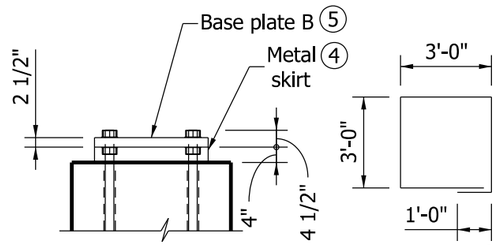

ELEVATION

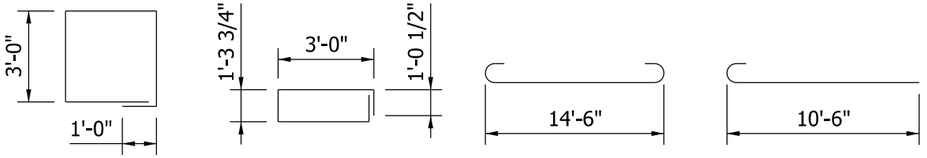

301 x 13'-0" | 302 x 9'-8" | 701 x 16-2" | 801 x 11'-5"

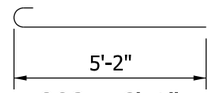

802 x 6'-1"

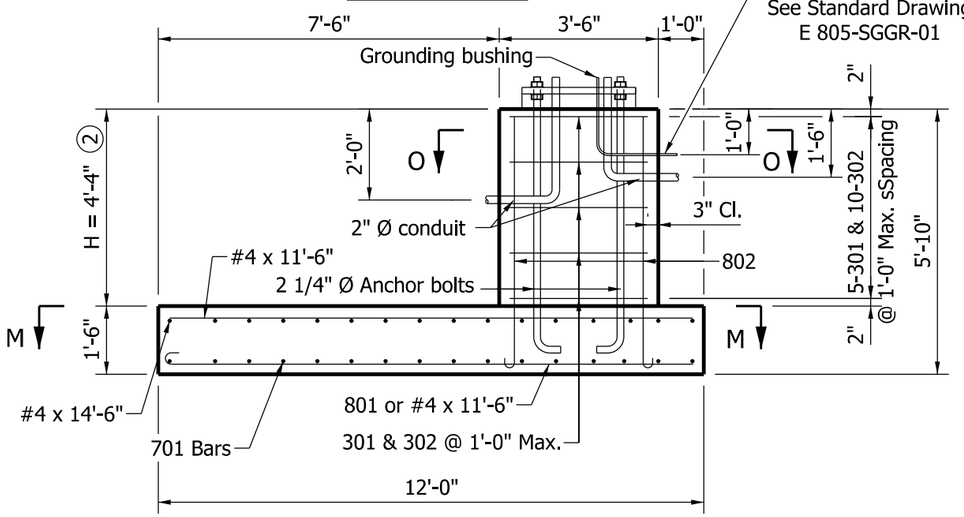

SECTION N-N

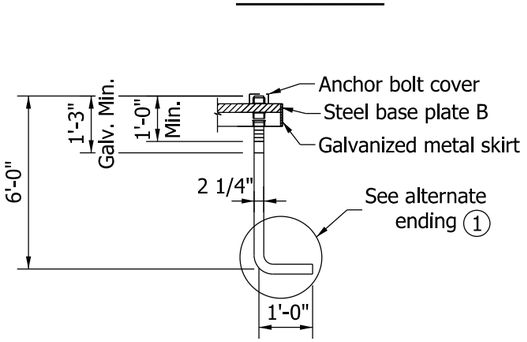

ANCHOR BOLT D DETAIL

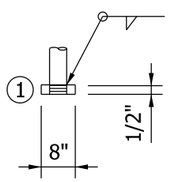

NOTES:

1. Alternate 8" x 8" x 1/2" square plate tapped and welded to anchor bolt may be substituted for the bent anchor bolt.
2. Minimum H required is 4 ft. soil cover over the entire footing area.
3. Bolt circle, B, shall allow clearance for the plate washer. Cutting or trimming the washer will not be allowed.
4. See Standard Drawing E 805-TSCS-17 for metal skirt details.
5. See Standard Drawing E 805-TSCS-04 for base plate B details.
6. A tooled line or other type of permanent marking shall be provided on the top of the foundation to indicate the direction of the conduits.

BILL OF MATERIALS SPREAD FOOTING TYPE D

REINFORCING BARS			
SIZE OR MARK	NUMBER OF BARS	LENGTH	WEIGHT (lbs.)
801	8	11'-5"	
802	16	6'-1"	
Total #8			504
701	17	16'-2"	
Total #7			562
#4	13	14'-6"	
#4	28	11'-6"	
Total #4			341
301	5	13'-0"	
302	10	9'-8"	
Total #3			61
Total Reinforcing Bars			1468
CONCRETE			
Concrete, Class A			12.0 CYS

INDIANA DEPARTMENT OF TRANSPORTATION

TRAFFIC SIGNAL CANTILEVER STRUCTURE SPREAD FOOTING FOUNDATION TYPE D FOR ARM OF GREATER THAN 35' TO 60'

SEPTEMBER 2013

STANDARD DRAWING NO. E 805-TSCS-19

ALFREDO B. HANZA REGISTERED No. 60020657 STATE OF INDIANA PROFESSIONAL ENGINEER

/s/ Alfredo B. Hanza — 02/05/13
DESIGN STANDARDS ENGINEER — DATE

/s/ Mark A. Miller — 03/27/13
CHIEF ENGINEER — DATE

GENERAL NOTES

1. See Standard Drawing E 807-BLIT-03 for bending diagrams.

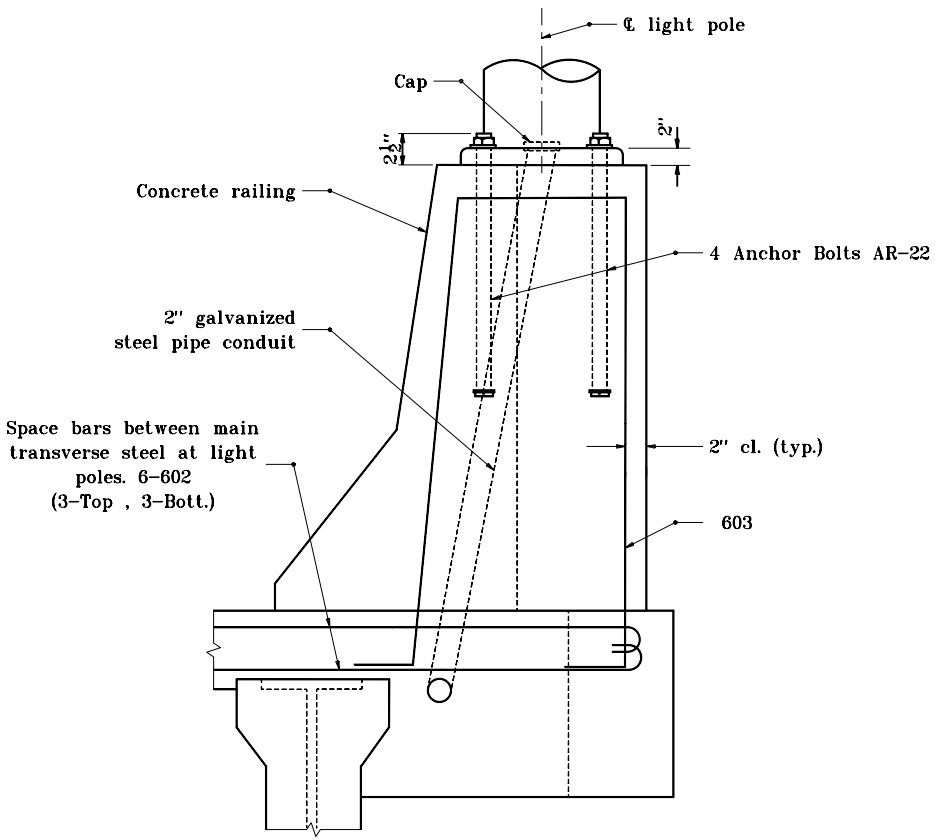

SECTION

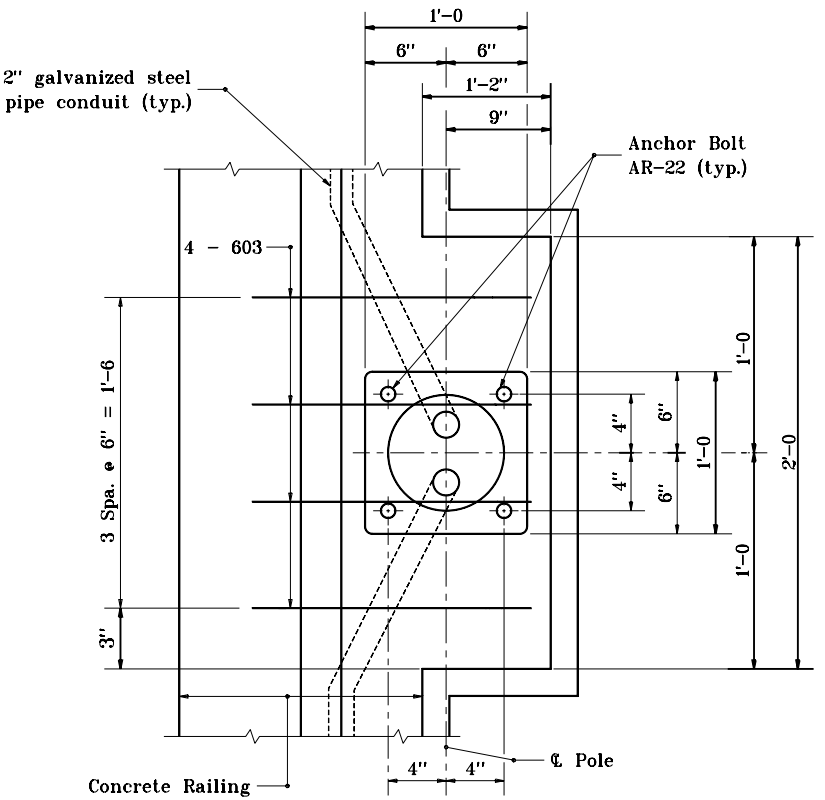

The bolt circle diameter is approximately 11½".

PLAN

INDIANA DEPARTMENT OF TRANSPORTATION

BRIDGE LIGHTING DETAILS

SEPTEMBER 1997

STANDARD DRAWING NO. **E 807-BLIT-01**

ANTHONY L. URENOVICH REGISTERED No. 18095 STATE OF INDIANA PROFESSIONAL ENGINEER

DESIGN STANDARDS ENGINEER

DETAILS PLACED IN THIS FORMAT	11-15-99
/s/ Anthony L. Uremovich	11-15-99
DESIGN STANDARDS ENGINEER	DATE
/s/ Firooz Zandi	11-15-99
CHIEF HIGHWAY ENGINEER	DATE
ORIGINALLY APPROVED	9-01-97

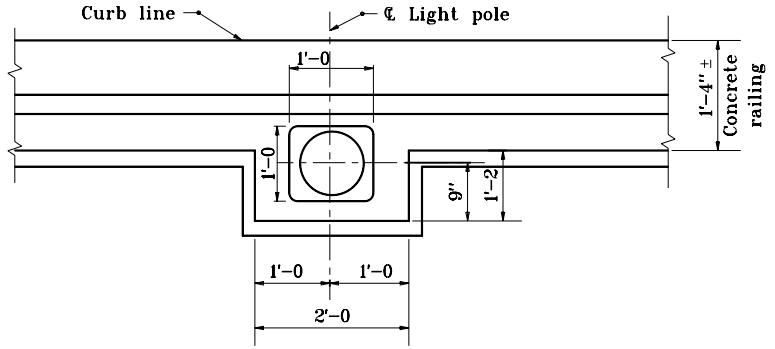

PLAN

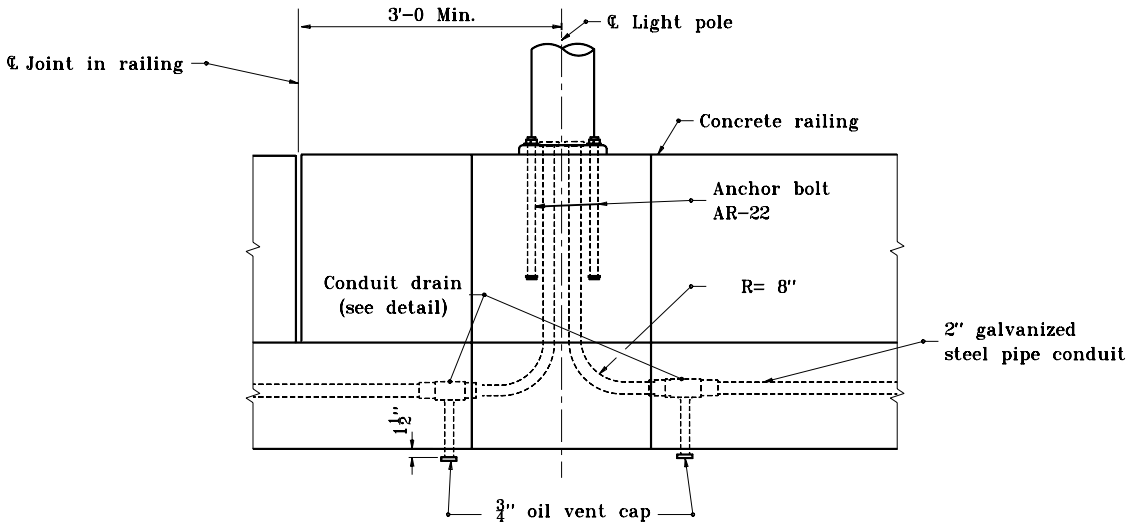

TYPICAL ELEVATION

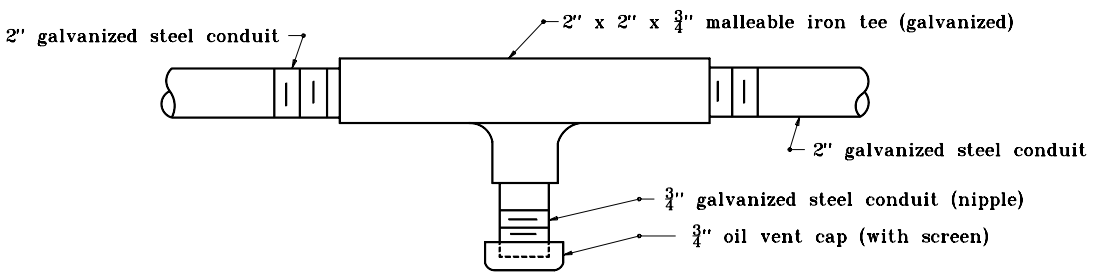

CONDUIT DRAIN DETAIL

INDIANA DEPARTMENT OF TRANSPORTATION

BRIDGE LIGHTING DETAILS

SEPTEMBER 1994

STANDARD DRAWING NO. **E 807–BLIT–02**

ANTHONY L. UREMOVICH REGISTERED No. 18095 STATE OF INDIANA PROFESSIONAL ENGINEER

DESIGN STANDARDS ENGINEER

DETAILS PLACED IN THIS FORMAT	11-15-99
/s/ Anthony L. Uremovich DESIGN STANDARDS ENGINEER	11-15-99 DATE
/s/ Firooz Zandi CHIEF HIGHWAY ENGINEER	11-15-99 DATE
ORGINALLY APPROVED	9-30-94

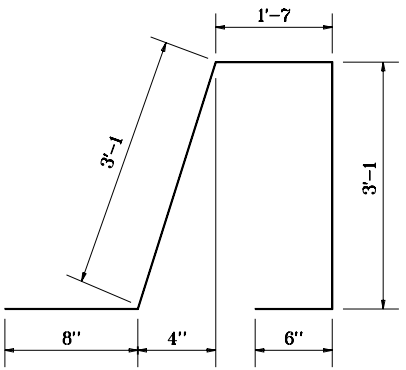

603 x 8'-11

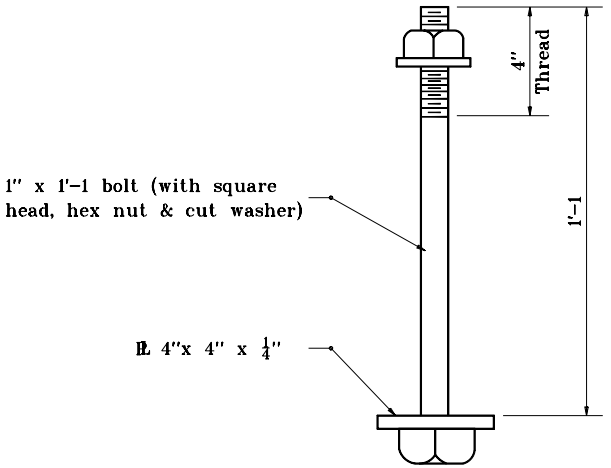

Galvanize thread, hex nut & cut washer.

ANCHOR BOLT AR-22

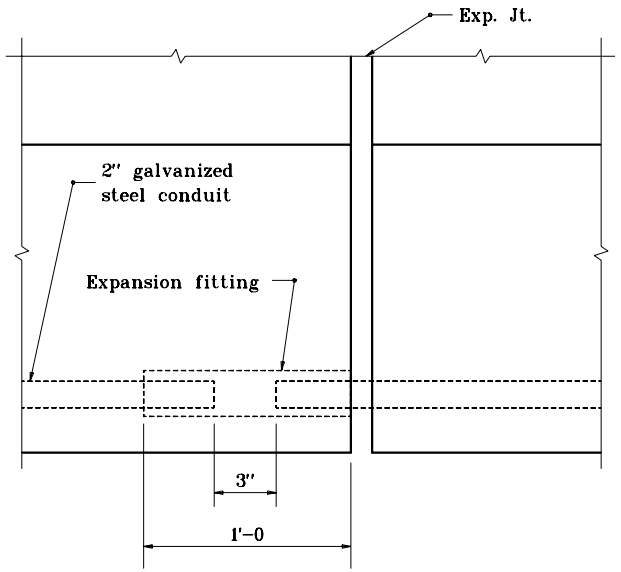

EXPANSION SLEEVE

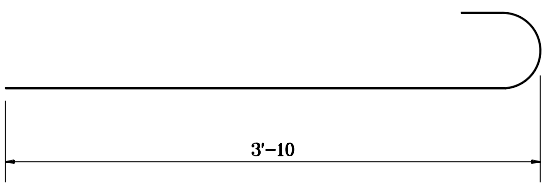

602 x 4'-8

INDIANA DEPARTMENT OF TRANSPORTATION

BRIDGE LIGHTING DETAILS

SEPTEMBER 1997

STANDARD DRAWING NO. **E 807-BLIT-03**

ANTHONY L. UREMOVICH REGISTERED No. 18095 STATE OF INDIANA PROFESSIONAL ENGINEER

DESIGN STANDARDS ENGINEER

DETAILS PLACED IN THIS FORMAT	11-15-99
/s/ Anthony L. Uremovich DESIGN STANDARDS ENGINEER	11-15-99 DATE
/s/ Firooz Zandi CHIEF HIGHWAY ENGINEER	11-15-99 DATE
ORIGINALLY APPROVED	9-01-97

GENERAL NOTES

1. See General Plan for location of light posts.
2. See Bill of Materials for reinforcing steel.
3. Ream and cap all ends.
4. Carry conduit 2'–0 beyond shoulder line.
5. Bars 602 and 603 shall be epoxy coated.
6. Mast arm shall be truss type.
7. Vertical contraction joints in the railing shall be located a minimum of 3'–0 from the centerline of the light pole.

INDIANA DEPARTMENT OF TRANSPORTATION

BRIDGE LIGHTING DETAILS

SEPTEMBER 1997

STANDARD DRAWING NO. **E 807–BLIT–04**

ANTHONY L. UREMOVICH REGISTERED No. 18095 STATE OF INDIANA PROFESSIONAL ENGINEER

DESIGN STANDARDS ENGINEER

DETAILS PLACED IN THIS FORMAT 11-15-99

/s/ Anthony L. Uremovich 11-15-99
DESIGN STANDARDS ENGINEER DATE

/s/ Firooz Zandi 11-15-99
CHIEF HIGHWAY ENGINEER DATE

ORIGINALLY APPROVED 9-01-97

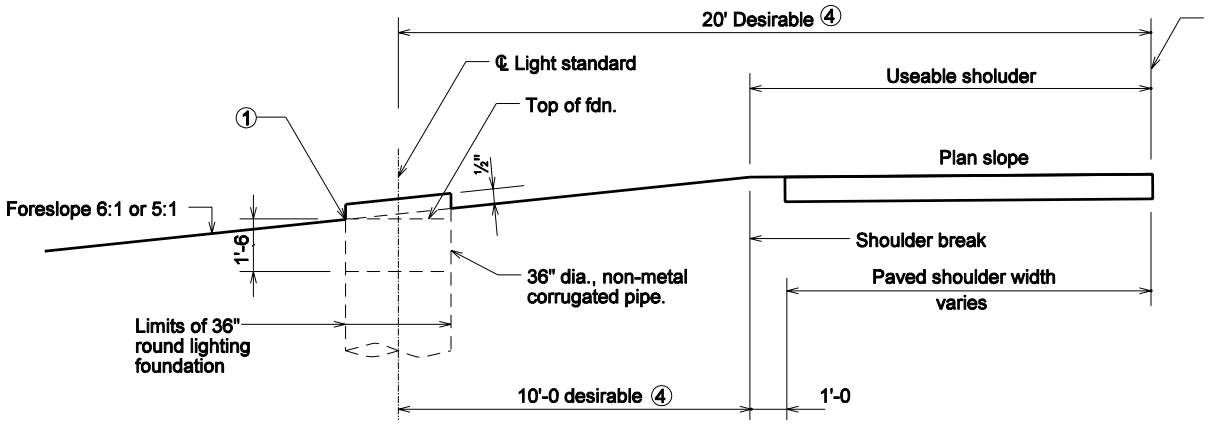

ELEVATION, FILL SECTION, 6:1 OR 5:1 SLOPE, ROUND FOUNDATION

Notes:

①② See Standard Drawing E 807-LTFD-05 General Notes.

3. Transformer base door shall face the right-of-way line.

4 Use which ever gives the greatest offset distance from the edge of the travel lane.

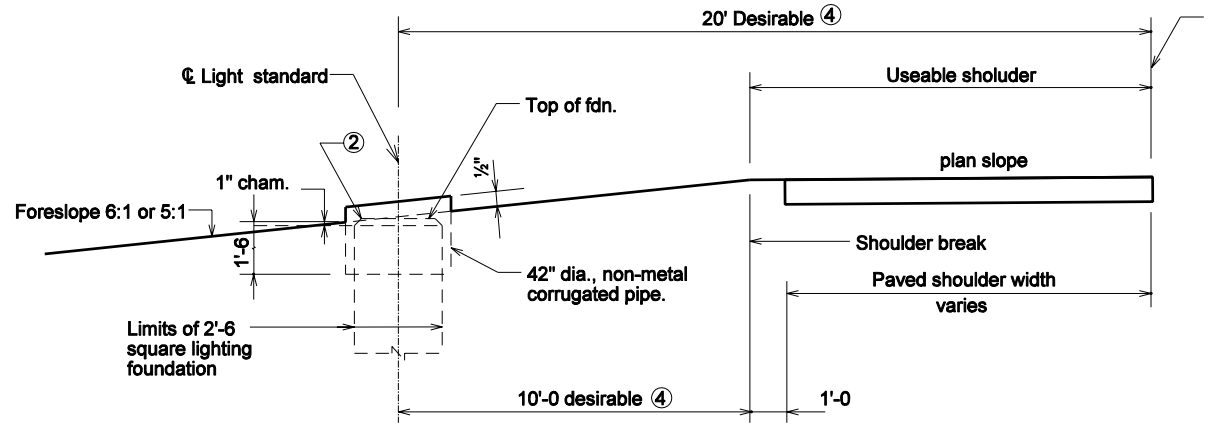

ELEVATION, FILL SECTION, 6:1 OR 5:1 SLOPE, SQUARE FOUNDATION

INDIANA DEPARTMENT OF TRANSPORTATION

LIGHT STANDARD FOUNDATION GRADING FILL SECTION

SEPTEMBER 2005

STANDARD DRAWING NO. E 807-LTFD-02

RICHARD L. VanCLEAVE REGISTERED No. 9750 STATE OF INDIANA PROFESSIONAL ENGINEER

DESIGN STANDARDS ENGINEER

/s/ Richard L. VanCleave 9-01-05
DESIGN STANDARDS ENGINEER DATE

/s/ Richard K. Smutzer 9-01-05
CHIEF HIGHWAY ENGINEER DATE

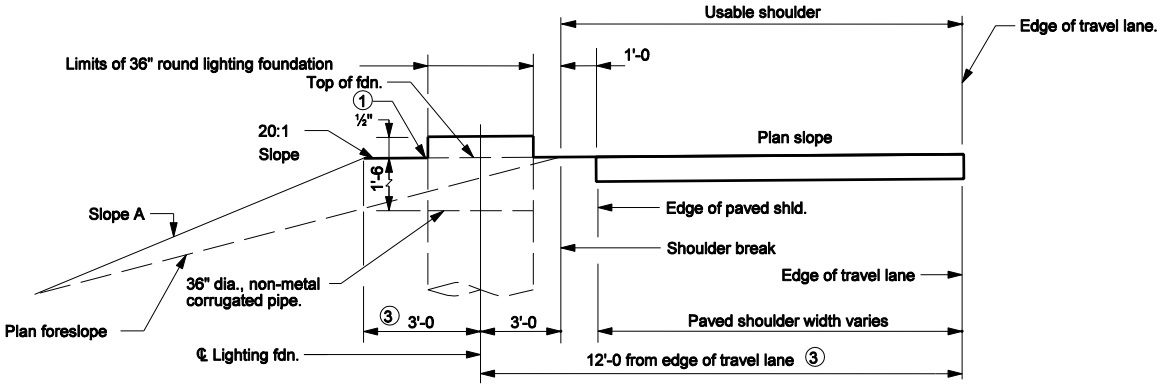

ELEVATION, 4:1 OR 3:1 SLOPE

Notes:

① See Standard Drawing E 807-LTFD-05 for General Notes.

2. Transformer base door shall face the right-of-way line.

③ Use which ever gives the greatest offset distance from the edge of the travel lane.

Plan foreslope	A
4:1	3:1 Desirable
3:1	2.5:1 Desirable

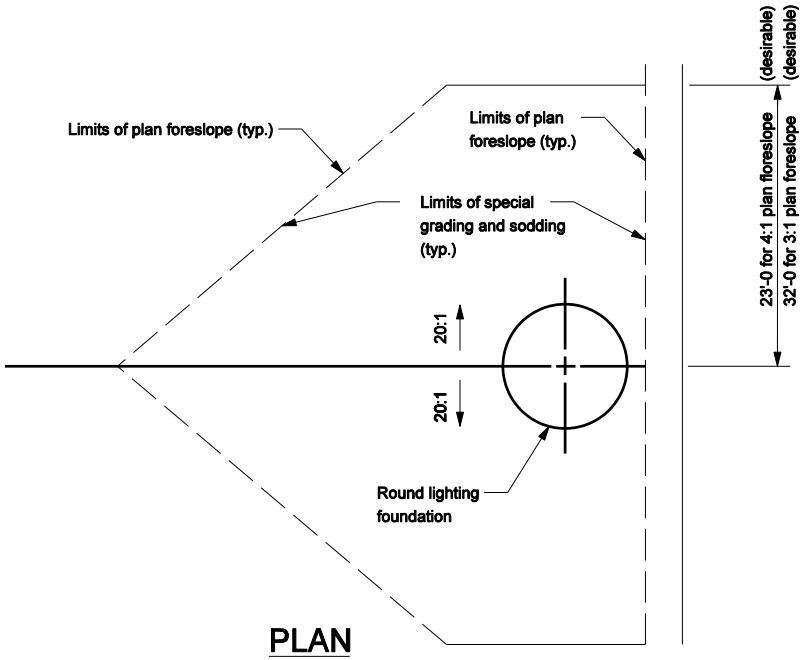

PLAN

INDIANA DEPARTMENT OF TRANSPORTATION

LIGHT STANDARD ROUND FDN. TNT. FILL SECTION FORESLOPE 4:1 OR 3:1

September 2005

STANDARD DRAWING NO. E 807-LTFD-03

RICHARD L. VanCLEAVE REGISTERED No. 9750 STATE OF INDIANA PROFESSIONAL ENGINEER

DESIGN STANDARDS ENGINEER

/s/ Richard L. VanCleave 9-01-05
DESIGN STANDARDS ENGINEER DATE

/s/ Richard K. Smutzer 9-01-05
CHIEF HIGHWAY ENGINEER DATE

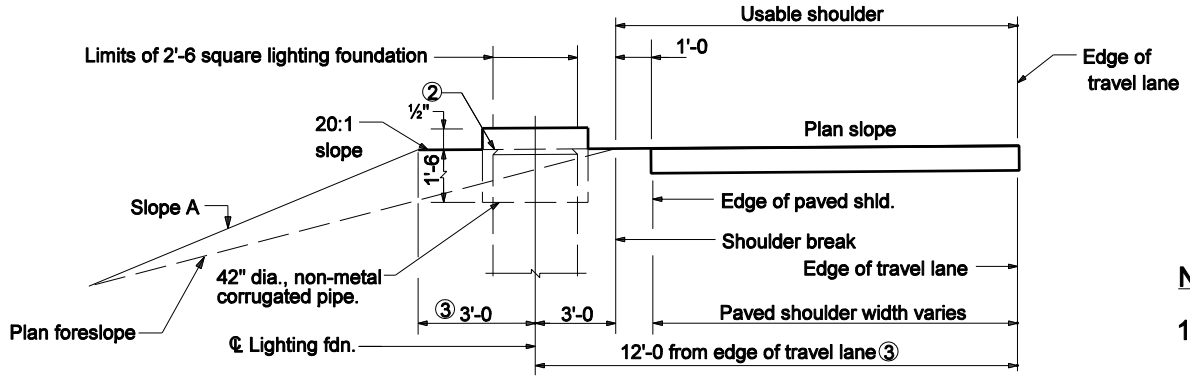

ELEVATION 4:1 OR 3:1 SLOPE

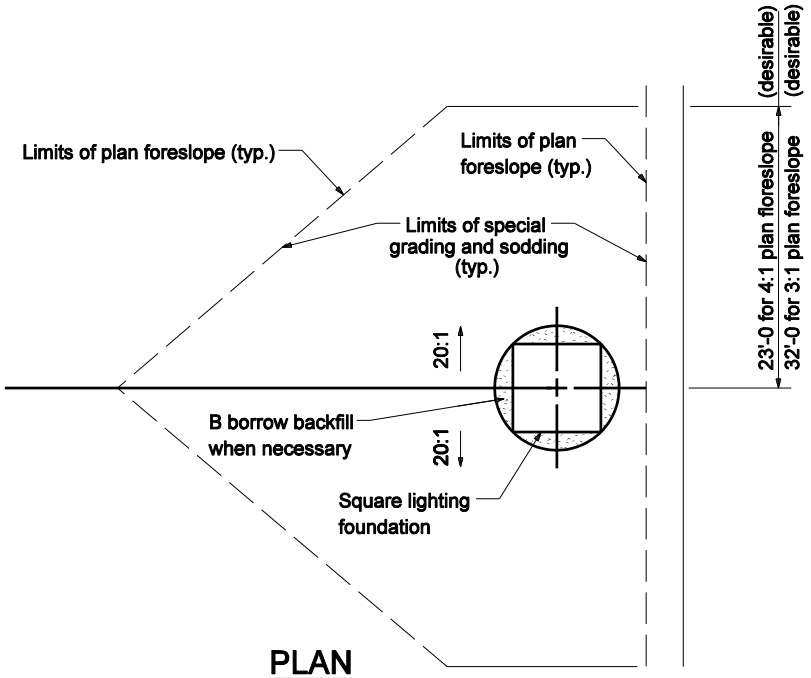

PLAN

Notes:

1. Transformer base door shall face the right-of-way line.

② See Standard Drawing E 807-LTFD-05 for General Notes.

3. Use whichever gives the greatest offset distance from the edge of the travel lane.

Plan foreslope	A
4:1	3:1 Desirable
3:1	2.5:1 Desirable

INDIANA DEPARTMENT OF TRANSPORTATION

LIGHT STANDARD SQUARE FDN. TMT. FILL SECTION FORESLOPE 4:1 OR 3:1

SEPTEMBER 2005

STANDARD DRAWING NO. E 807-LTFD-03A

RICHARD L. VanCLEAVE REGISTERED No. 9750 STATE OF INDIANA PROFESSIONAL ENGINEER

DESIGN STANDARDS ENGINEER

/s/ Richard L. VanCleave 9-01-05
DESIGN STANDARDS ENGINEER DATE

/s/ Richard K. Smutzer 9-01-05
CHIEF HIGHWAY ENGINEER DATE

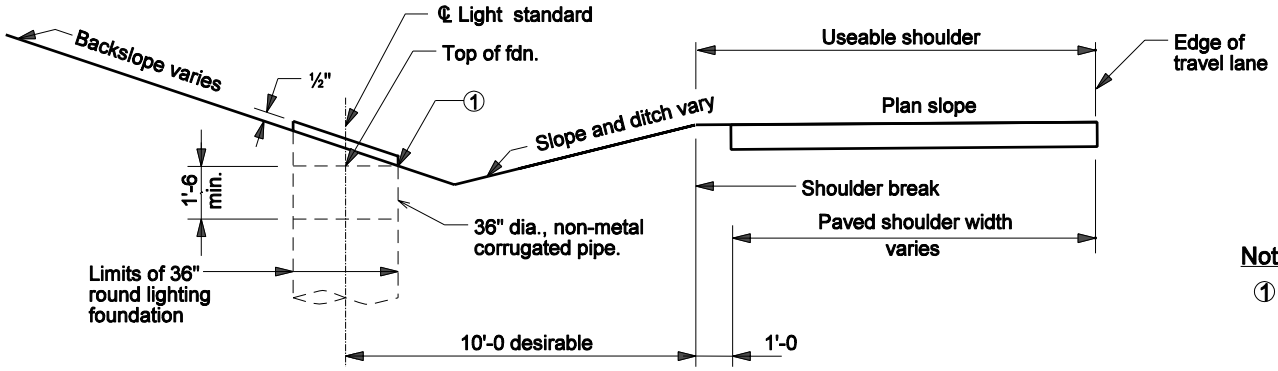

ELEVATION, CUT SECTION, ROUND FOUNDATION

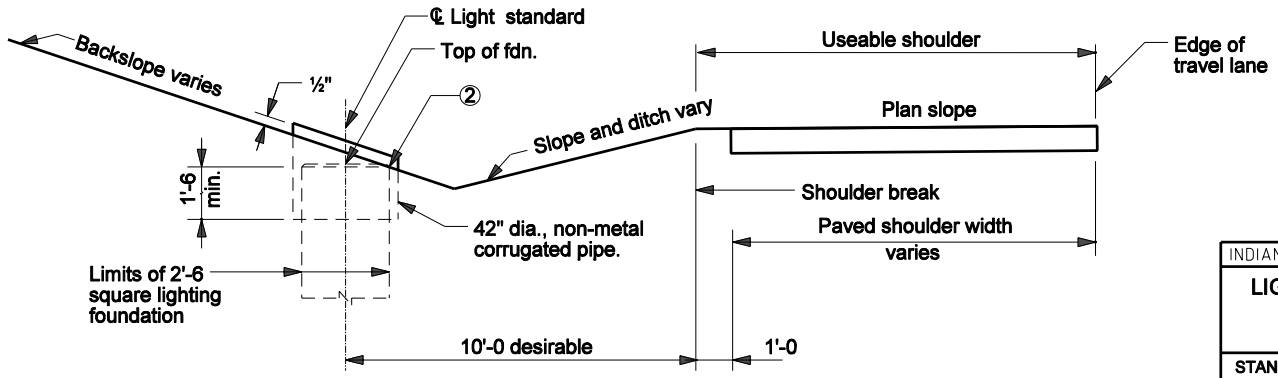

ELEVATION, CUT SECTION, SQUARE FOUNDATION

Notes:

①② See Standard Drawing E 807-LTFD-05 for General Notes.

3. Transformer base door shall face roadway.

4. Foundation shall not be installed in ditch flow line.

INDIANA DEPARTMENT OF TRANSPORTATION

LIGHT STANDARD FOUNDATION GRADING CUT SECTION

SEPTEMBER 2005

STANDARD DRAWING NO. E 807-LTFD-04

RICHARD L. VanCLEAVE REGISTERED No. 9750 STATE OF INDIANA PROFESSIONAL ENGINEER

DESIGN STANDARDS ENGINEER

/s/ Richard L. VanCleave 9-01-05
DESIGN STANDARDS ENGINEER DATE

/s/ Richard K. Smutzer 9-01-05
CHIEF HIGHWAY ENGINEER DATE

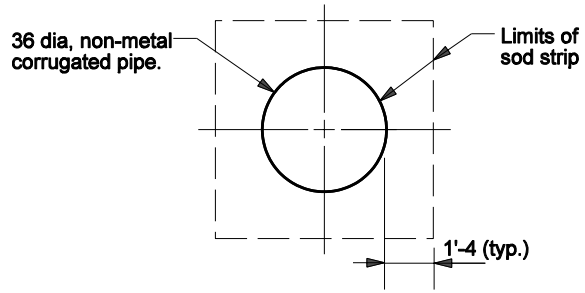

PLAN, ROUND FOUNDATION

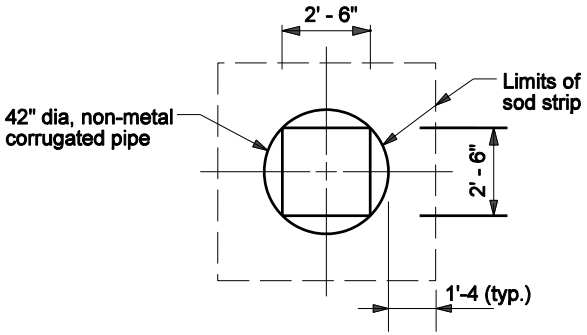

PLAN, SQUARE FOUNDATION

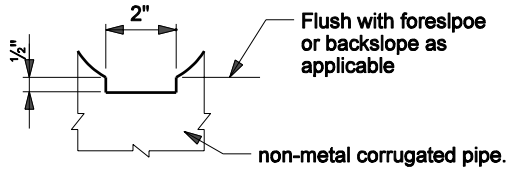

DRAINAGE NOTCH

Notes:

1. Drainage notch shall follow the slope of the ground.

INDIANA DEPARTMENT OF TRANSPORTATION

LIGHT STANDARD FOUNDATION GRADING DETAILS

SEPTEMBER 2005

STANDARD DRAWING NO. E 807-LTFD-04A

RICHARD L. VanCLEAVE REGISTERED No. 9750 STATE OF INDIANA PROFESSIONAL ENGINEER

DESIGN STANDARDS ENGINEER

/s/ Richard L. VanCleave 9-01-05
DESIGN STANDARDS ENGINEER DATE

/s/ Richard K. Smutzer 9-01-05
CHIEF HIGHWAY ENGINEER DATE

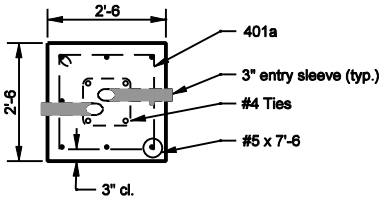

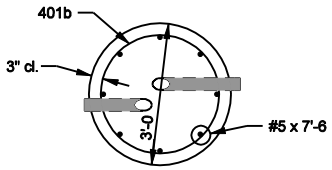

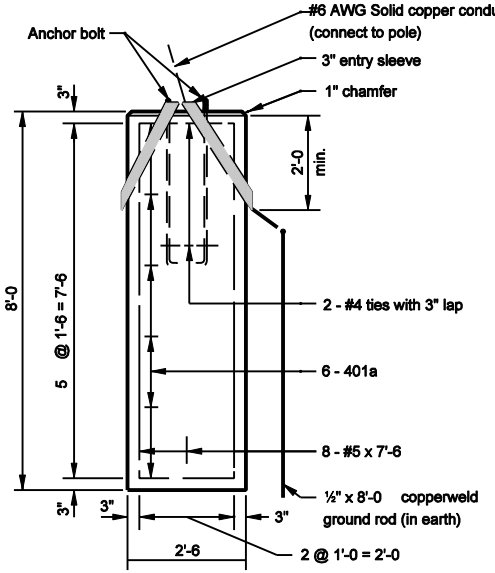

SQUARE FOUNDATION DETAIL

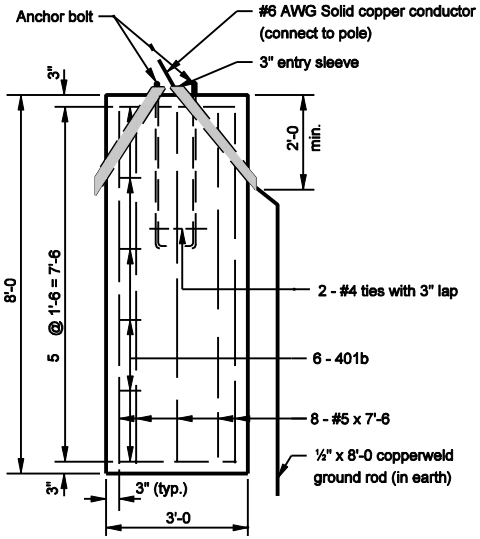

ROUND FOUNDATION DETAIL

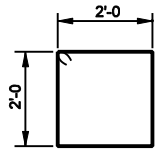

401a x 8'-10

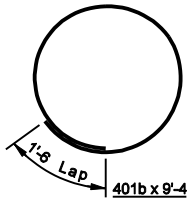

401b x 9'-4

GENERAL NOTES

① Top of lighting foundation shall be flush with foreslope at this point.

② Base of chamfer at top of lighting foundation shall be flush with foreslope at this point.

3. See Standard Drawing E 801-LTFD-04A for plan views of pipe placement and sodding.

4. Low exposd end of pipe shall have drainage notch as shown on Standard Drawing E 807-LTFD-04A.

5. Arrows shall be engraved on top of foundation to indicate direction of cable duct run.

INDIANA DEPARTMENT OF TRANSPORTATION

LIGHT FOUNDATION

SEPTEMBER 2002

STANDARD DRAWING NO. E 807-LTFD-05

RICHARD L. VONCLEAVE REGISTERED No. 9750 STATE OF INDIANA PROFESSIONAL ENGINEER

DESIGN STANDARDS ENGINEER

/s/ Richard L. VonCleave 9-03-02
DESIGN STANDARDS ENGINEER DATE

/s/ Richard K. Smutzer 9-03-02
CHIEF HIGHWAY ENGINEER DATE

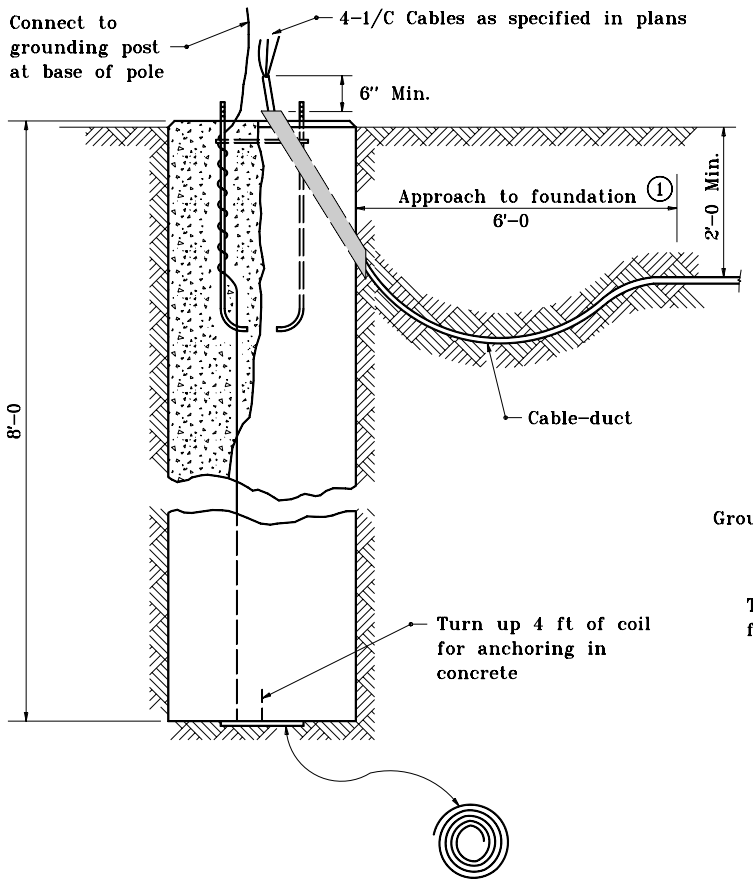

DETAIL OF COIL

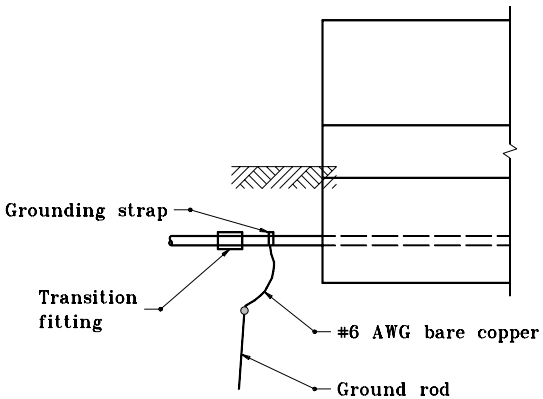

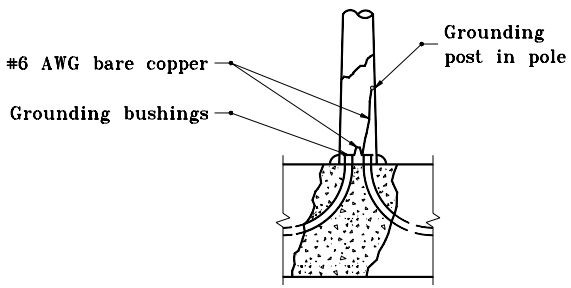

BRIDGE GROUNDING

GENERAL NOTES

① The 6 ft approach to foundation shall be trenched.

2. Bottom of trench shall be graded so as to provided a smooth, uniform ramp to the entry sleeve of the foundation.

3. Each cable–duct shall have its own entry sleeve. There shall be at least two entry sleeves per footing.

4. Coil to be of #6 AWG copper approximately 15 ft long.

5. Place felt between concrete and coil to prevent bonding.

6. Coil method of grounding may be used with precast foundation.

INDIANA DEPARTMENT OF TRANSPORTATION

LIGHT FOUNDATION

SEPTEMBER 2000

STANDARD DRAWING NO. **E 807–LTFD–06**

ANTHONY L. UREMOVICH REGISTERED No. 18095 STATE OF INDIANA PROFESSIONAL ENGINEER

DESIGN STANDARDS ENGINEER

/s/ Anthony L. Uremovich 9–01–00
DESIGN STANDARDS ENGINEER — DATE

/s/ Firooz Zandi 9–01–00
CHIEF HIGHWAY ENGINEER — DATE

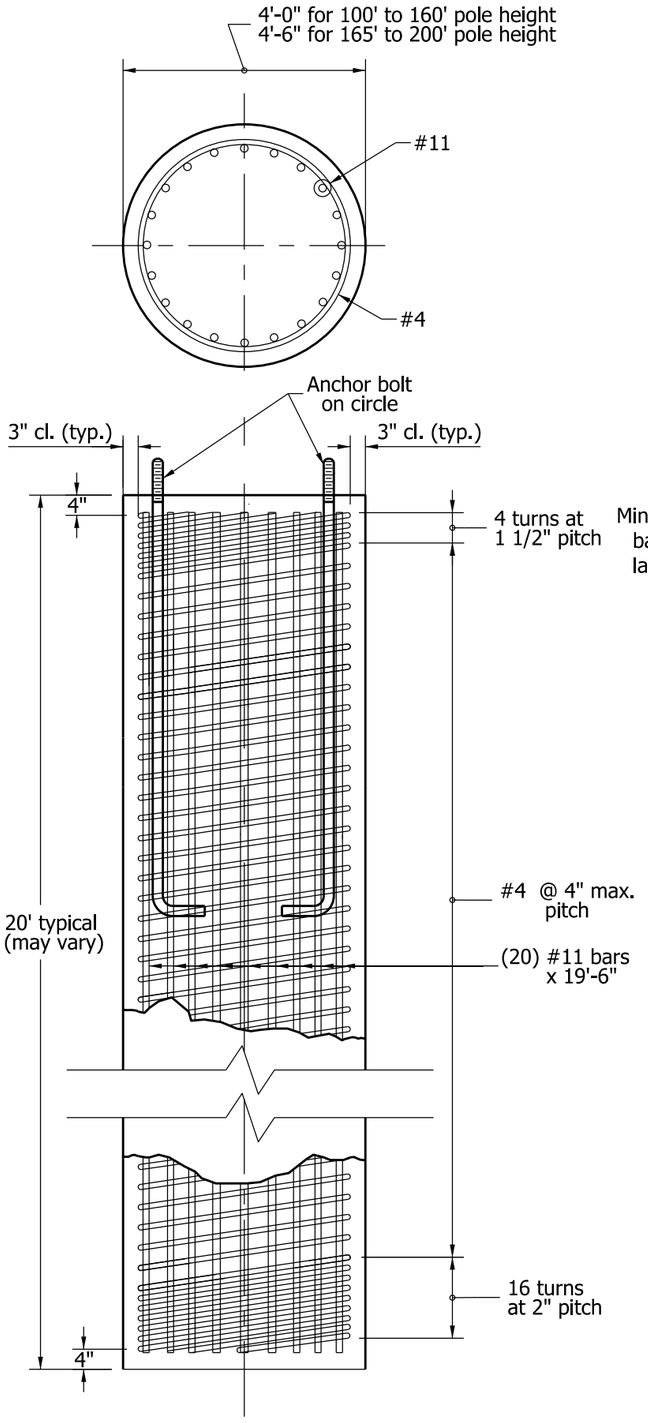

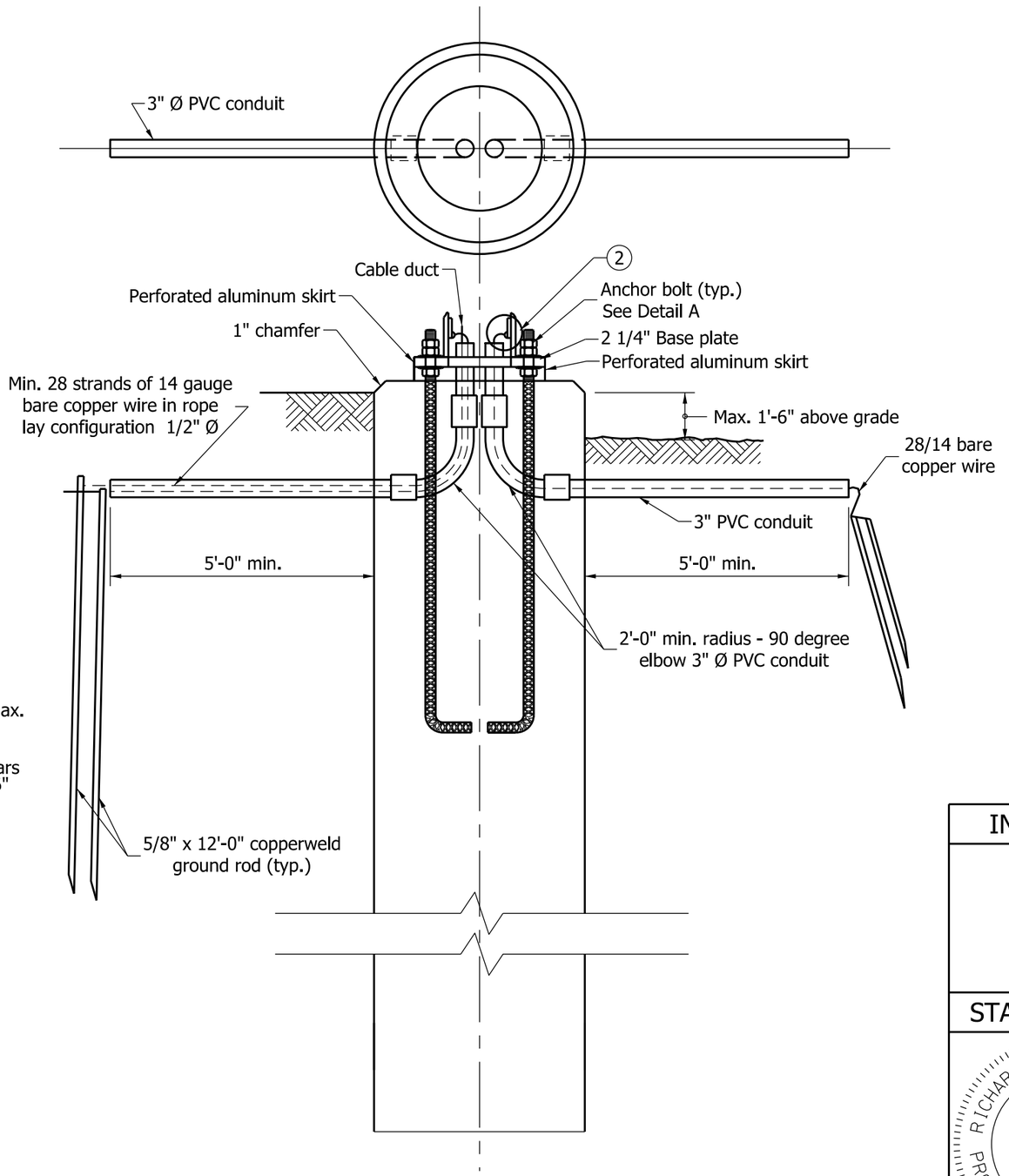

NOTES:

1. An arrow or arrows shall be imprinted onto the top of the foundation to indicate the direction of the cable-duct run.

(2) See Standard Drawing E807-LTLR-02 for details.

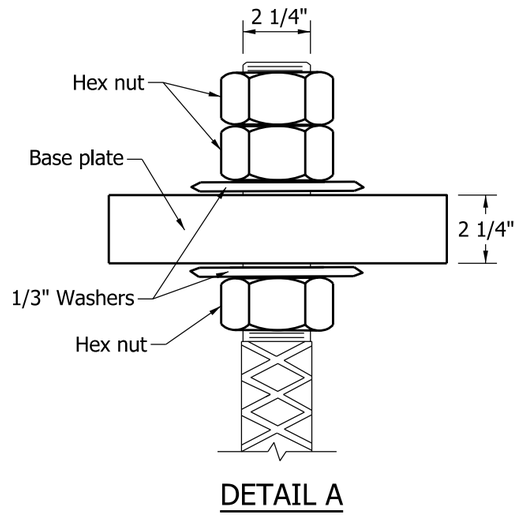

DETAIL A

INDIANA DEPARTMENT OF TRANSPORTATION

HIGH MAST TOWER FOUNDATION

SEPTEMBER 2010

STANDARD DRAWING NO. E 807-LTFD-07

RICHARD L. VanCLEAVE REGISTERED No. 9750 STATE OF INDIANA PROFESSIONAL ENGINEER

DESIGN STANDARDS ENGINEER

/s/ Richard L. VanCleave 09/01/10
DESIGN STANDARDS ENGINEER DATE

/s/ Mark A. Miller 09/01/10
CHIEF HIGHWAY ENGINEER DATE

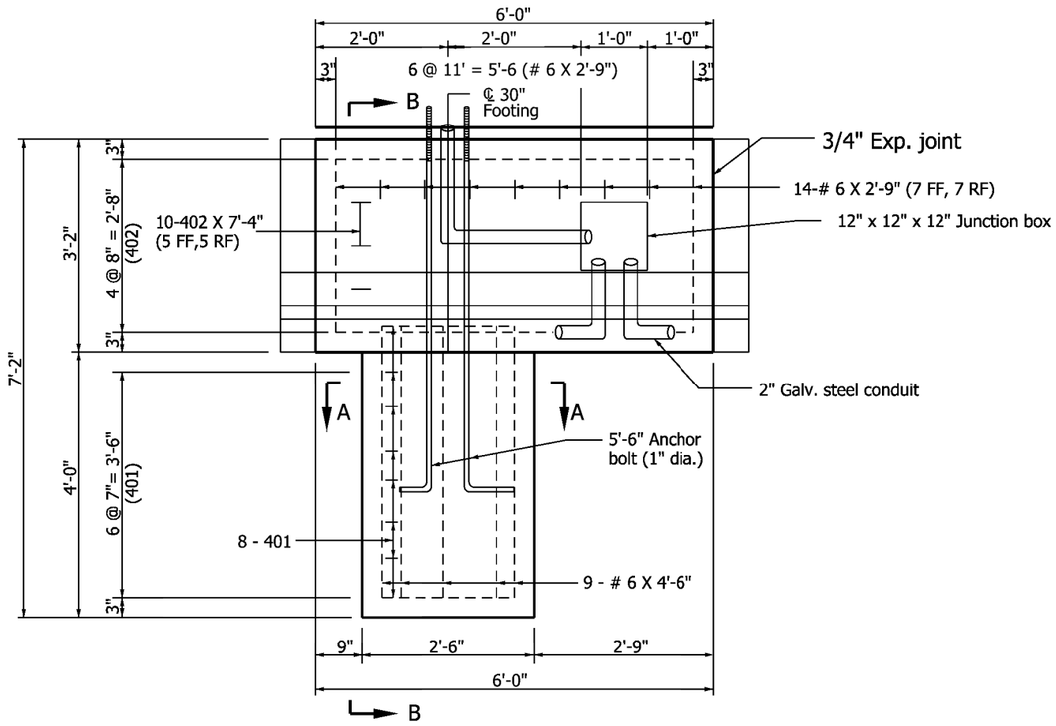

ELEVATION

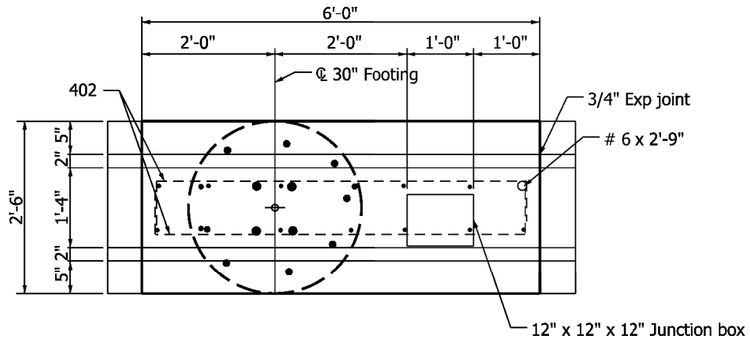

PLAN

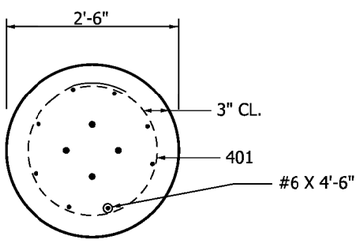

SECTION A-A

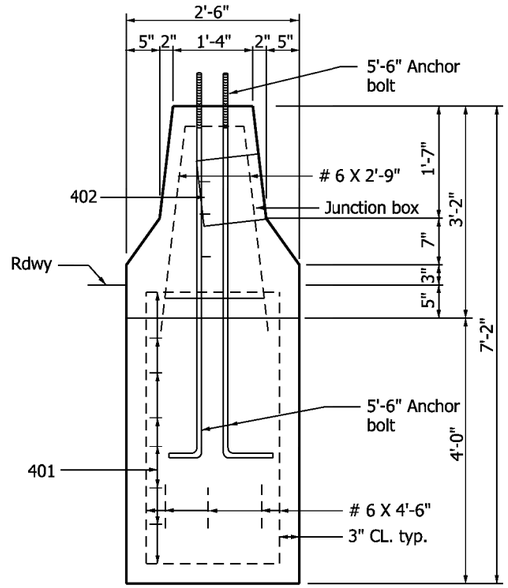

SECTION B-B

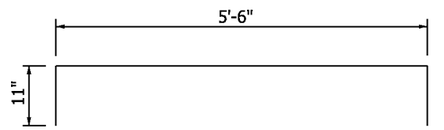

402 X 7'-4"

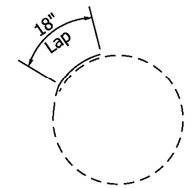

401 X 7'-9"

Notes:

1. The 2" galvanized steel conduit and junction box can be installed in the median shoulder. The junction box must be in front of the light foundation.
2. Field cut reinforcing bars to accomodate junction box.

INDIANA DEPARTMENT OF TRANSPORTATION

CONVENTIONAL LIGHT FOUNDATION FOR 33" CONCRETE MEDIAN WALL INSTALLATION SEPTEMBER 2009

STANDARD DRAWING NO. E 807-LTFD-09

RICHARD L. VanCLEAVE REGISTERED No. 9750 STATE OF INDIANA PROFESSIONAL ENGINEER

DESIGN STANDARDS ENGINEER

/s/ Richard L.VanCleave 09/01/09
DESIGN STANDARDS ENGINEER DATE

/s/ Mark A. Miller 09/01/09
CHIEF HIGHWAY ENGINEER DATE

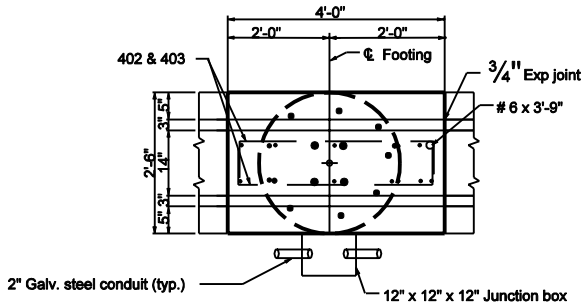

PLAN

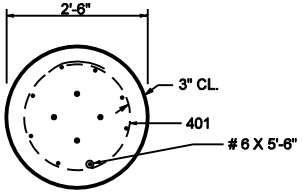

SECTION A-A

Notes:

1. Junction box shall meet the following specifications:
   a. Material: Polymer concrete
   b. Color: Concrete gray
   c. Cover rating: 20,000 lbs.

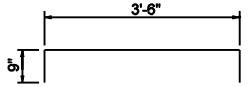

403 X 5'-0"

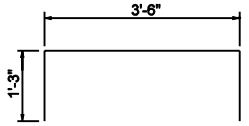

402 X 6'-0"

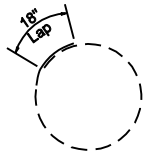

401 X 8'-10"

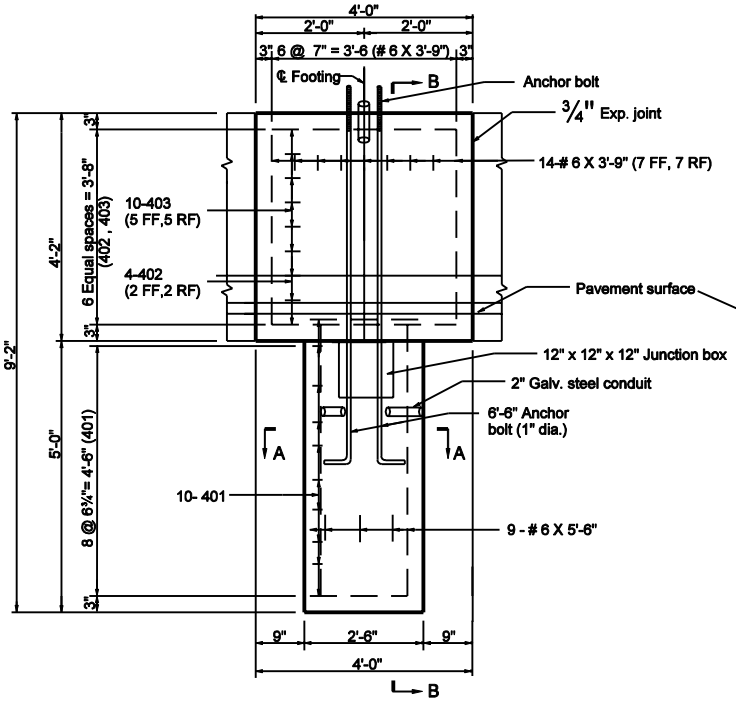

ELEVATION

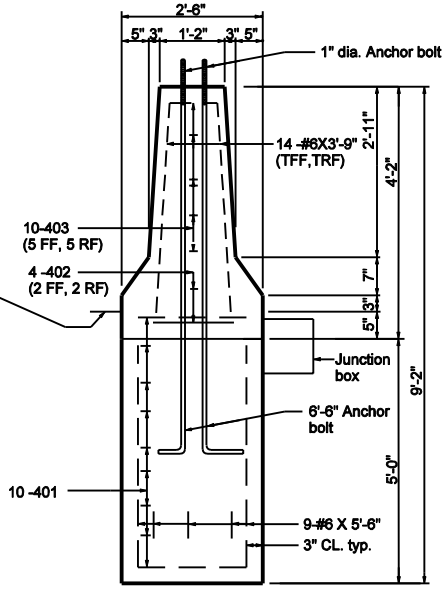

SECTION B-B

INDIANA DEPARTMENT OF TRANSPORTATION

CONVENTIONAL LIGHT FOUNDATION FOR 45" CONCRETE MEDIAN WALL INSTALLATION.

SEPTEMBER 2002

STANDARD DRAWING NO. E 807-LTFD-10

RICHARD L. VanCLEAVE REGISTERED No. 9750 STATE OF INDIANA PROFESSIONAL ENGINEER

DESIGN STANDARDS ENGINEER

/s/ Richard L VanCleave — DESIGN STANDARDS ENGINEER — 9-03-02 DATE

/s/ Richard K. Smutzer — CHIEF HIGHWAY ENGINEER — 9-03-02 DATE

GENERAL NOTES

1. Alternate handhole minimum size shall be 1'–7 x 2'–6 x 1'–10 depth with 2 in. lid thickness.
2. Approximate weight for cast iron ring and cover shall be 320 lb.

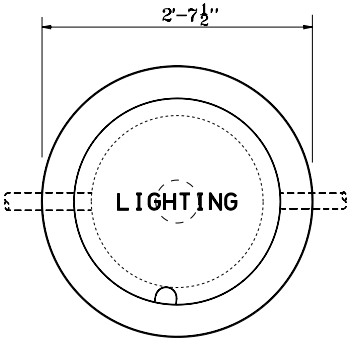

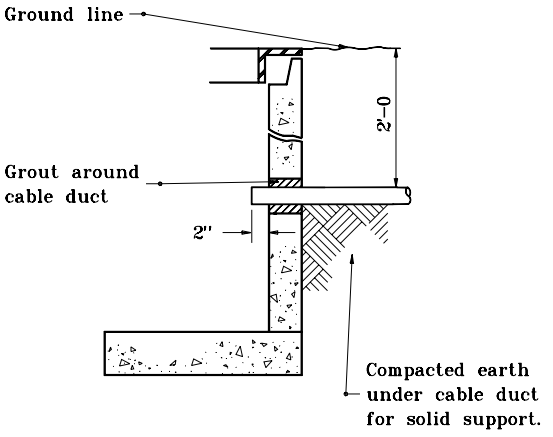

CABLE DUCT ENTERING HANDHOLE

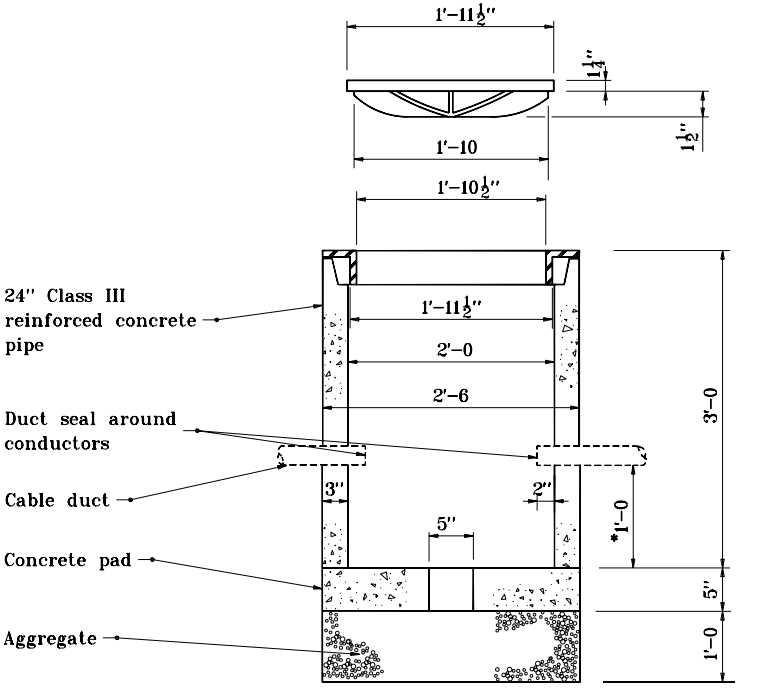

* 4" min. for alternate handhole

STREET & ALLEY TYPE HANDHOLE

INDIANA DEPARTMENT OF TRANSPORTATION

LIGHT HANDHOLE DETAILS

MARCH 1995

STANDARD DRAWING NO. **E 807–LTHH–01**

ANTHONY L. UREMOVICH REGISTERED No. 18095 STATE OF INDIANA PROFESSIONAL ENGINEER

DESIGN STANDARDS ENGINEER

DETAILS PLACED IN THIS FORMAT 7-27-99

/s/ Anthony L. Uremovich 7-27-99
DESIGN STANDARDS ENGINEER — DATE

/s/ Firooz Zandi 7-27-99
CHIEF HIGHWAY ENGINEER — DATE

ORIGINALLY APPROVED 3-01-95

GENERAL NOTES

1. For multiple compression fitting and insulating link details, see Standard Drawing No. E 803-SNWR-04.

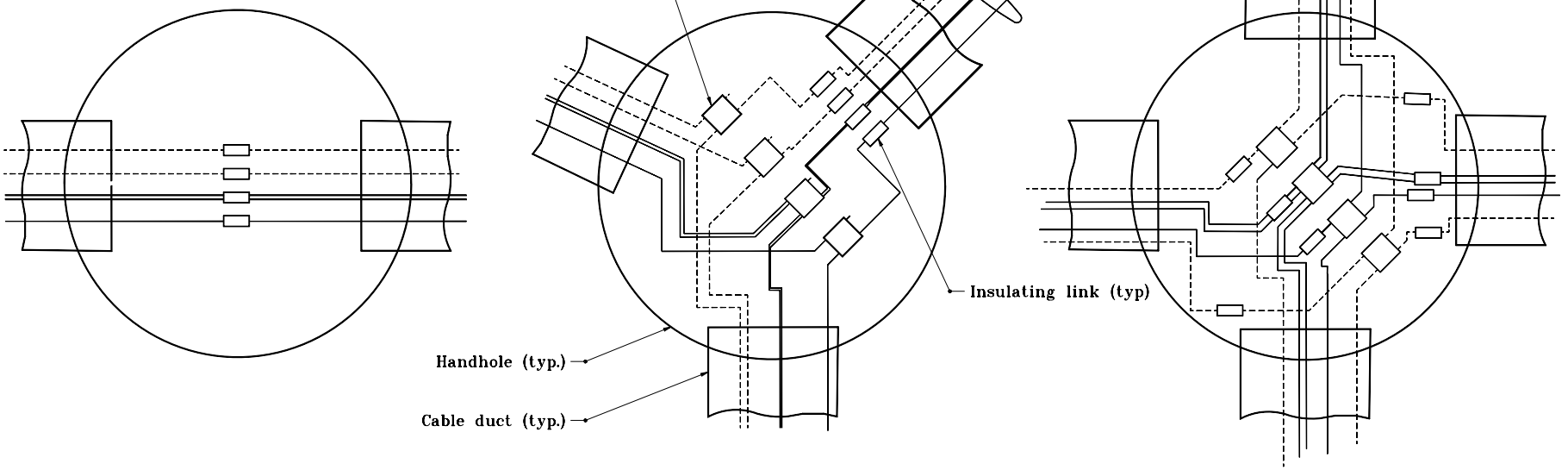

Type A **Type B** **Type C**

HANDHOLE CONNECTION DIAGRAM

INDIANA DEPARTMENT OF TRANSPORTATION

LIGHT HANDHOLE CONNECTIONS

MARCH 1995

STANDARD DRAWING NO. **E 807-LTHH-02**

ANTHONY L. UREMOVICH REGISTERED No. 18095 STATE OF INDIANA PROFESSIONAL ENGINEER

DESIGN STANDARDS ENGINEER

DETAILS PLACED IN THIS FORMAT	11-15-99
/s/ Anthony L. Uremovich DESIGN STANDARDS ENGINEER	11-15-99 DATE
/s/ Firooz Zandi CHIEF HIGHWAY ENGINEER	11-15-99 DATE
ORIGINALLY APPROVED	3-01-95

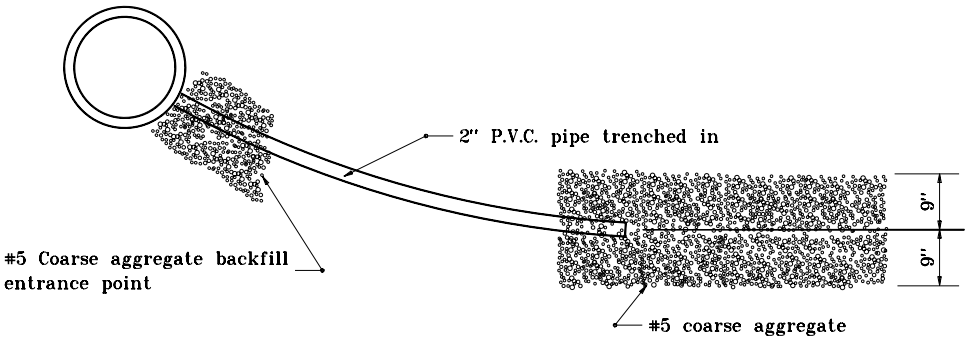

PLAN VIEW

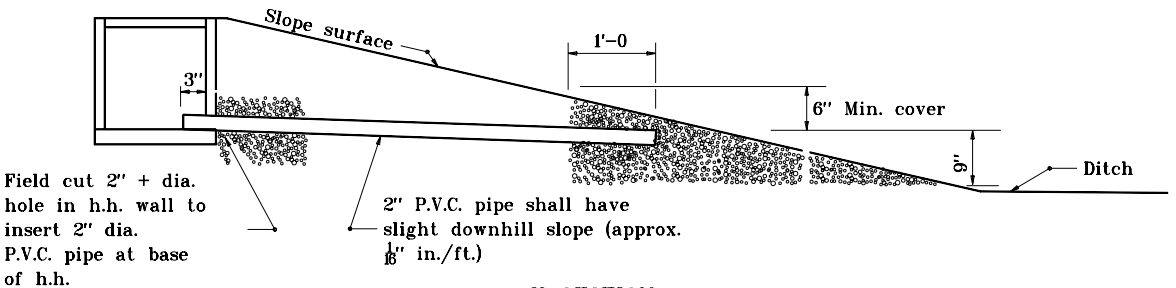

X-SECTION

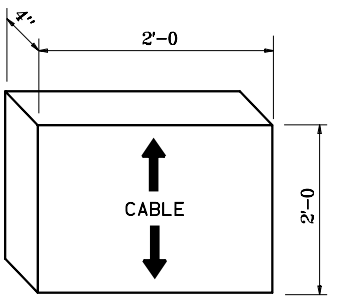

CABLE MARKER

HANDHOLE DRAIN DETAIL

INDIANA DEPARTMENT OF TRANSPORTATION

LIGHT HANDHOLE DRAIN & CABLE MARKER

MARCH 1995

STANDARD DRAWING NO. **E 807-LTHH-03**

ANTHONY L. UREMOVICH REGISTERED No. 18095 STATE OF INDIANA PROFESSIONAL ENGINEER

DESIGN STANDARDS ENGINEER

DETAILS PLACED IN THIS FORMAT	11-15-99
/s/ Anthony L. Uremovich DESIGN STANDARDS ENGINEER	11-15-99 DATE
/s/ Firooz Zandi CHIEF HIGHWAY ENGINEER	11-15-99 DATE
ORIGINALLY APPROVED	3-01-95

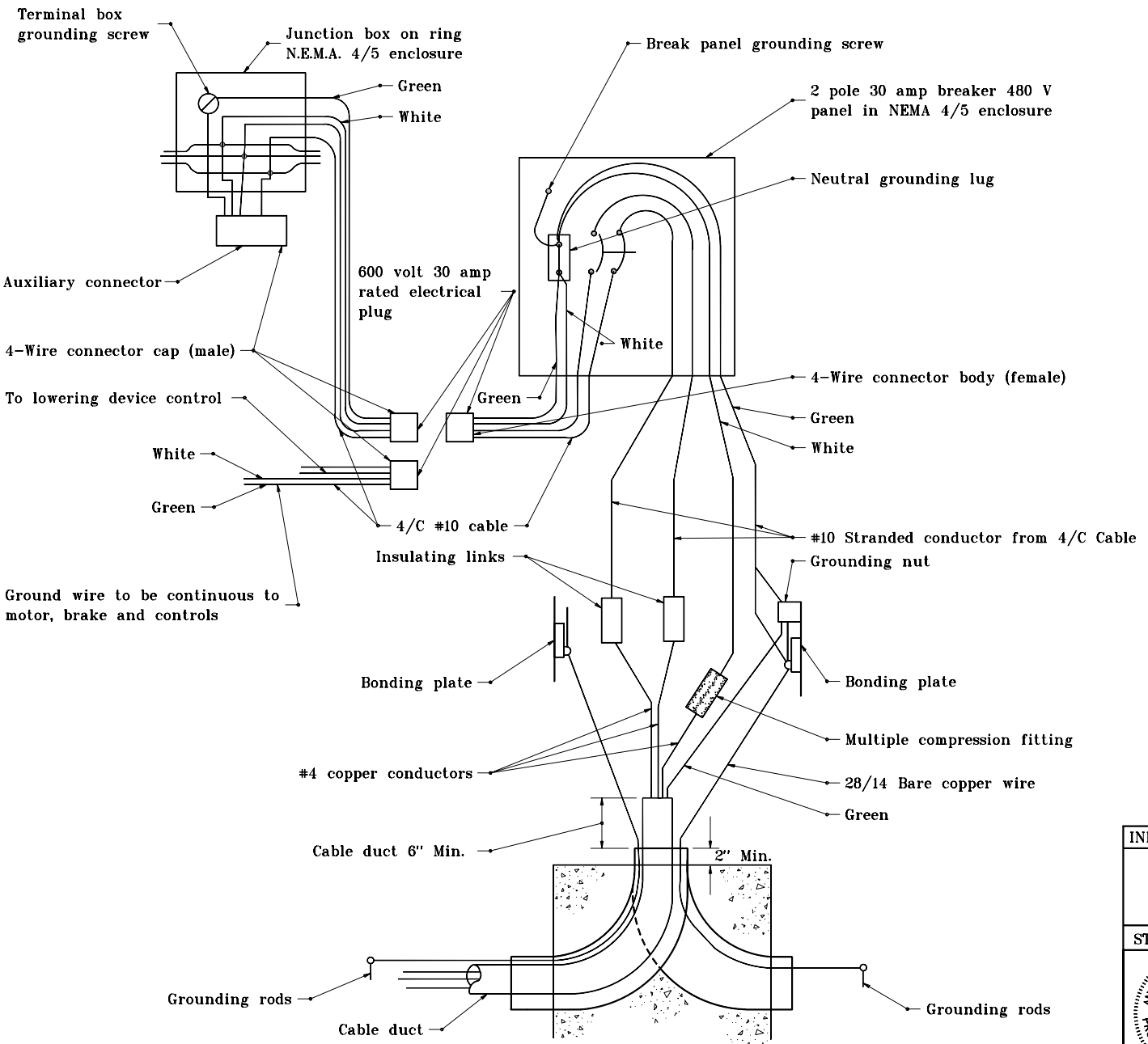

WIRING DIAGRAM

INDIANA DEPARTMENT OF TRANSPORTATION

HIGHWAY ILLUMINATION TOWER BOTTOM LATCH

MARCH 1995

STANDARD DRAWING NO. **E 807-LTHI-01**

ANTHONY L. UREMOVICH REGISTERED No. 18095 STATE OF INDIANA PROFESSIONAL ENGINEER

DESIGN STANDARDS ENGINEER

DETAILS PLACED IN THIS FORMAT	11-15-99
/s/ Anthony L. Uremovich, DESIGN STANDARDS ENGINEER	11-15-99
/s/ Firooz Zandi, CHIEF HIGHWAY ENGINEER	11-15-99
ORIGINALLY APPROVED	3-01-95

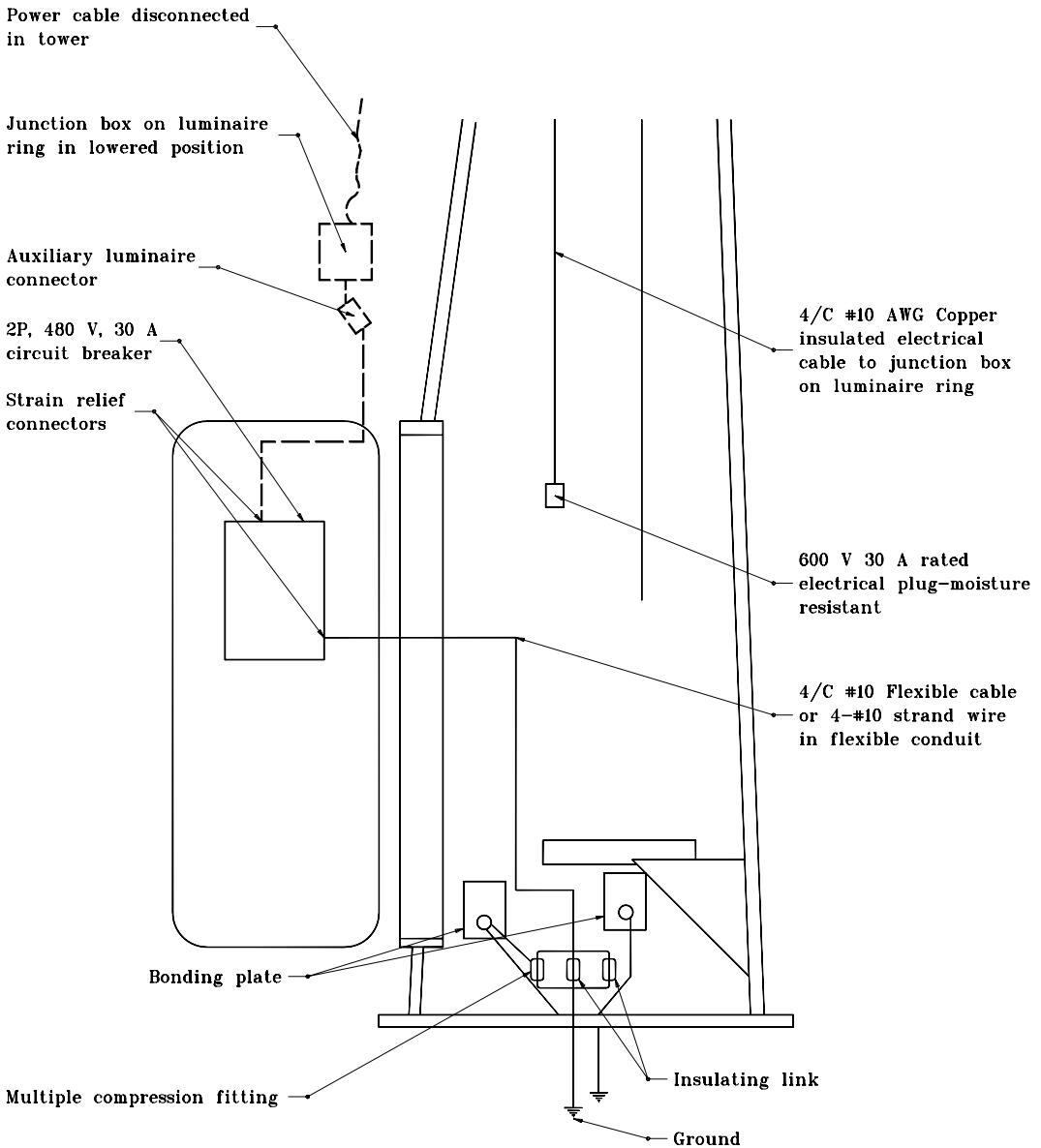

DETAIL

INDIANA DEPARTMENT OF TRANSPORTATION

HIGHWAY ILLUMINATION TOWER BOTTOM LATCH

MARCH 1995

STANDARD DRAWING NO. **E 807–LTHI–02**

ANTHONY L. UREMOVICH REGISTERED No. 18095 STATE OF INDIANA PROFESSIONAL ENGINEER

DESIGN STANDARDS ENGINEER

DETAILS PLACED IN THIS FORMAT 11-15-99

/s/ Anthony L. Uremovich 11-15-99
DESIGN STANDARDS ENGINEER DATE

/s/ Firooz Zandi 11-15-99
CHIEF HIGHWAY ENGINEER DATE

ORIGINALLY APPROVED 3-01-95

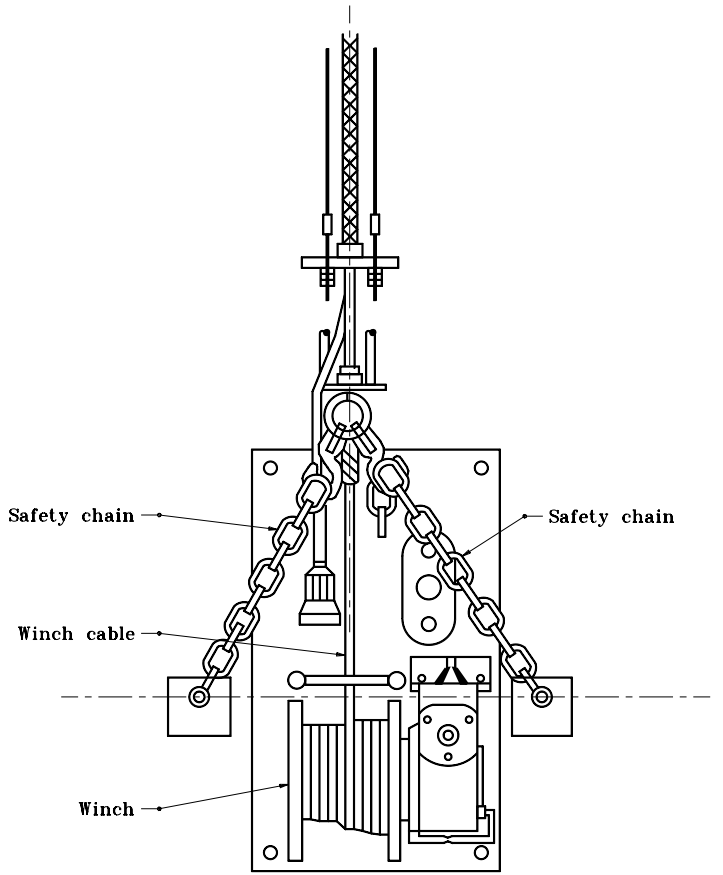

BOTTOM LATCH

INDIANA DEPARTMENT OF TRANSPORTATION

HIGHWAY ILLUMINATION TOWER DETAILS – BOTTOM LATCH

JANUARY 1999

STANDARD DRAWING NO. **E 807-LTHI-03**

ANTHONY L. UREMOVICH REGISTERED No. 18095 STATE OF INDIANA PROFESSIONAL ENGINEER

DESIGN STANDARDS ENGINEER

/s/ Anthony L. Uremovich 1-04-99
DESIGN STANDARDS ENGINEER — DATE

/s/ Donald W. Lucas 1-04-99
CHIEF HIGHWAY ENGINEER — DATE

Source Sheet: None

ITEM DESRIPTIONS

1. Hitch pin
2. 3/4" dia. reversible electric motor 120 V, 11.5 A, 350 RPM
3. Reversing drum switch
4. Control cord 20 ft. length
5. Wiring housing
6. Plug to mate to connector in pole base or transformer secondary
7. Torque limiter coupling
8. 3/4" dia. steel shaft
9. Ballbearing pillowblock
10. 5/8" hex socket crank shaft coupling
11. Connector to motor from 120 V transformer secondary
12. Stepdown trnsformer 120 V secondary, 1.5 kVA for 240 V, 277 V, & 480 V; 2.0 kVA for 208 V
13. 1/2" carry handle
14. Plug to connector in pole base from transformer primary
15. NEMA 4-circuit-breaker enclosure field mounted to pole handhole door
16. 1/2" dia. mounting bolt, 4 req'd.
17. 0.25 in. thick steel winch plate zinc electroplate finish
18. Power unit mounting bracket, 0.25 in. thick steel zinc electroplate finish
19. 5 ft. power supply cord and connector
20. Winch 30:1 gear ratio internal drag brake
21. 5/16" dia. 7 x 19 wire rope. Length is pole height + 6 ft. stainless steel
22. Forged steel swivel, 11,000 psi ultimate strength
23. Cord grip
24. Winch cable guard
25. Winch outboard support

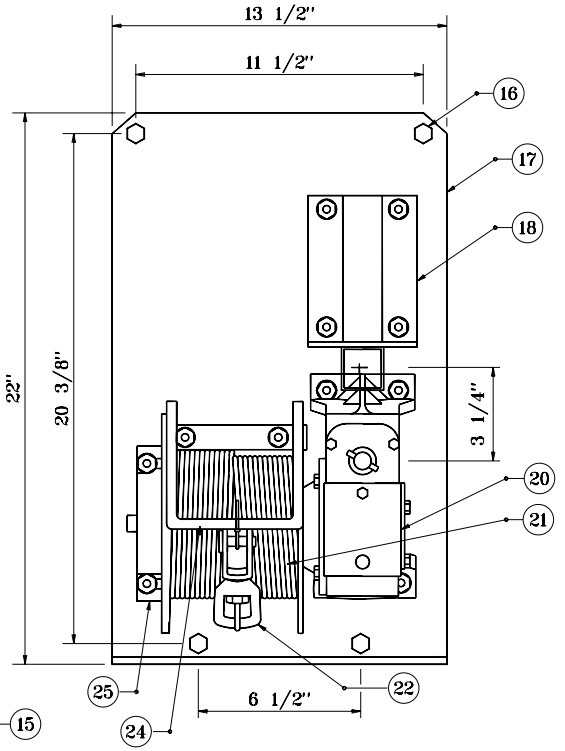

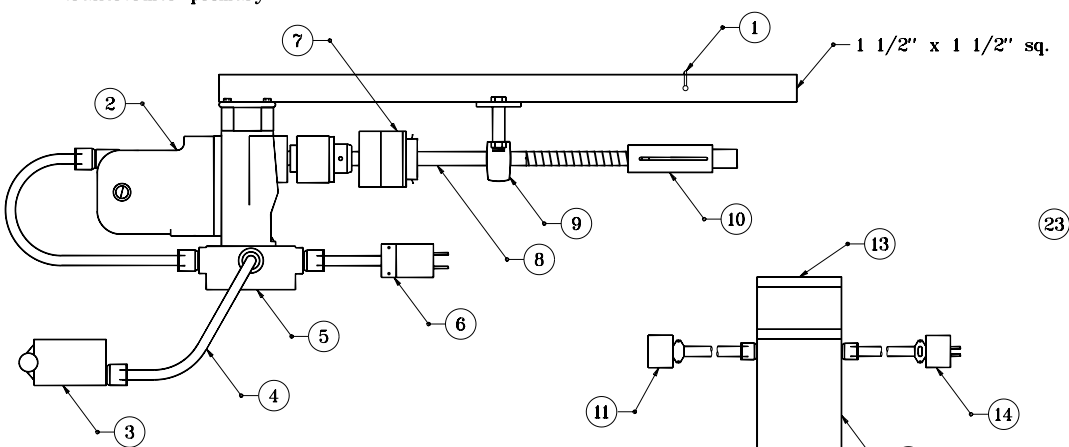

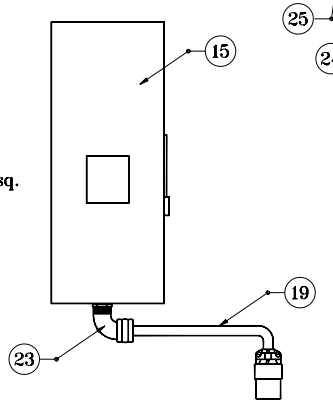

INDIANA DEPARTMENT OF TRANSPORTATION

HIGHWAY ILLUMINATION TOWER DETAILS - BOTTOM LATCH

JANUARY 1999

STANDARD DRAWING NO **E 807-LTHI-03A**

ANTHONY L. UREMOVICH REGISTERED No. 18095 STATE OF INDIANA PROFESSIONAL ENGINEER

DESIGN STANDARDS ENGINEER

/s/ Anthony L. Uremovich 1-04-99
DESIGN STANDARDS ENGINEER — DATE

/s/ Donald W. Lucas 1-04-99
CHIEF HIGHWAY ENGINEER — DATE

Source Sheet: None

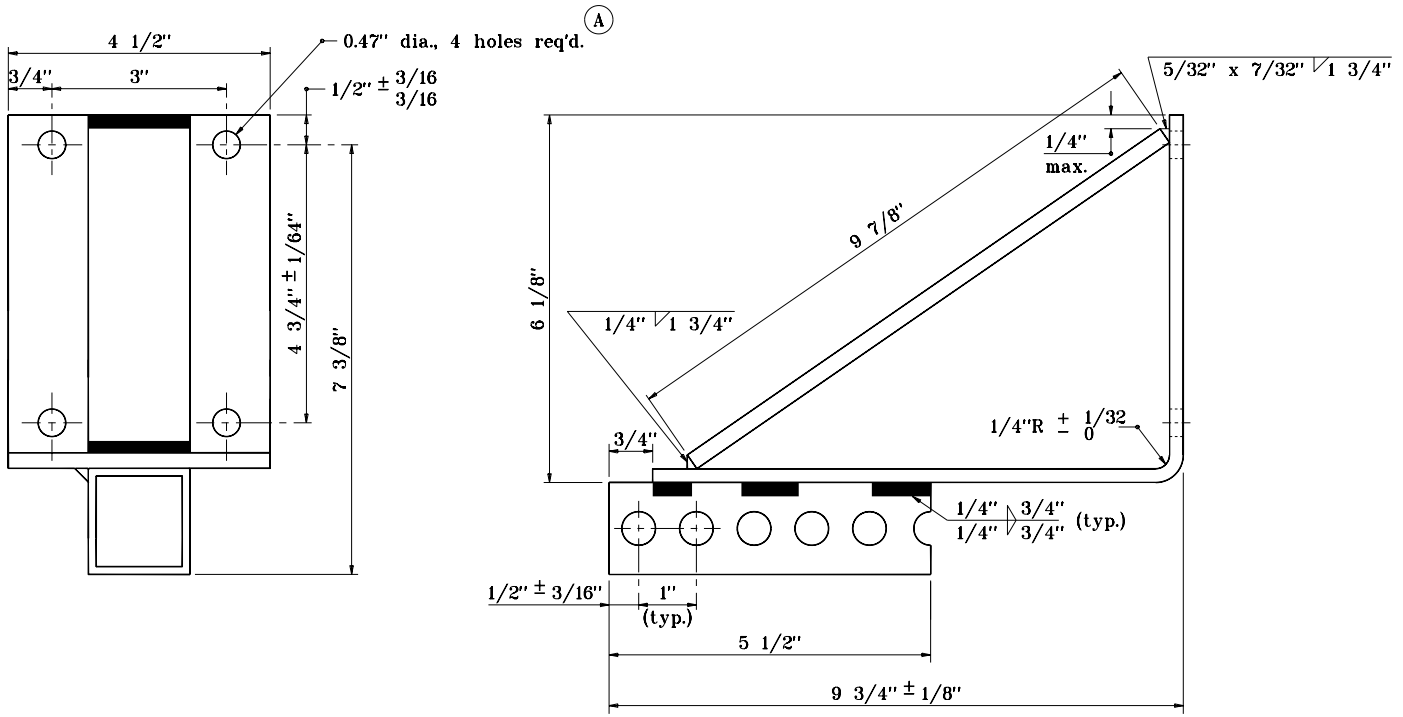

(A) Tolerances: 0 ± 1/32", angles ± 1/2" unless noted

INDIANA DEPARTMENT OF TRANSPORTATION

HIGHWAY ILLUMINATION TOWER DETAILS – BOTTOM LATCH

JANUARY 1999

STANDARD DRAWING NO. E 807-LTHI-03B

ANTHONY L. UREMOVICH REGISTERED No. 18095 STATE OF INDIANA PROFESSIONAL ENGINEER

DESIGN STANDARDS ENGINEER

/s/ Anthony L. Uremovich 1-04-99
DESIGN STANDARDS ENGINEER — DATE

/s/ Donald W. Lucas 1-04-99
CHIEF HIGHWAY ENGINEER — DATE

Source Sheet: None

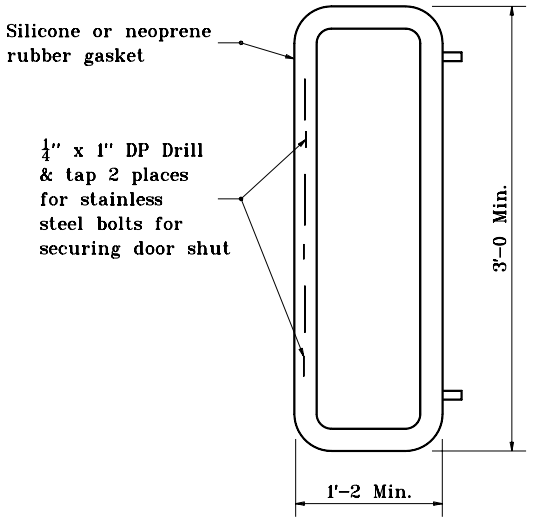

HANDHOLE FRAME DETAIL

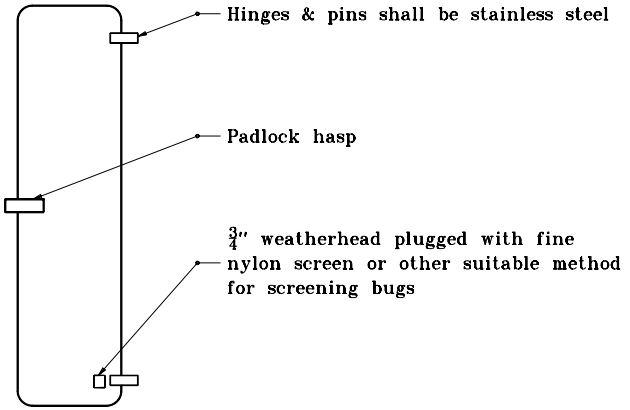

HANDHOLE COVER DETAIL

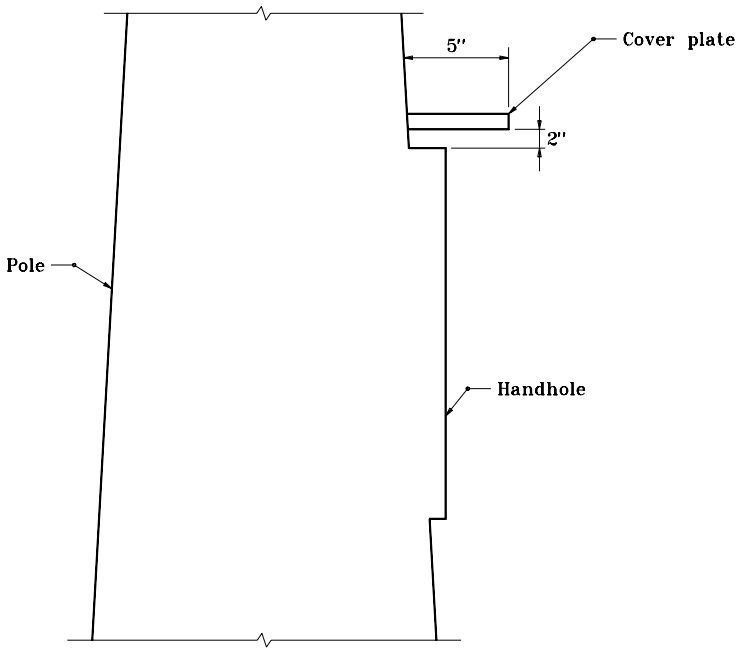

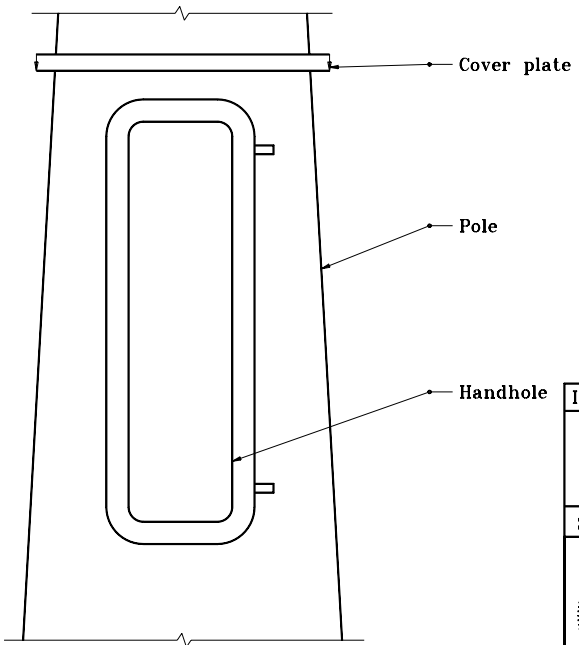

COVER PLATE

INDIANA DEPARTMENT OF TRANSPORTATION

HIGHWAY ILLUMINATION TOWER BOTTOM LATCH

MARCH 1995

STANDARD DRAWING NO. **E 807-LTHI-04**

ANTHONY L. UREMOVICH REGISTERED No. 18095 STATE OF INDIANA PROFESSIONAL ENGINEER

DESIGN STANDARDS ENGINEER

DETAILS PLACED IN THIS FORMAT 11-15-99

/s/ Anthony L. Uremovich 11-15-99
DESIGN STANDARDS ENGINEER DATE

/s/ Firooz Zandi 11-15-99
CHIEF HIGHWAY ENGINEER DATE

ORIGINALLY APPROVED 3-01-95

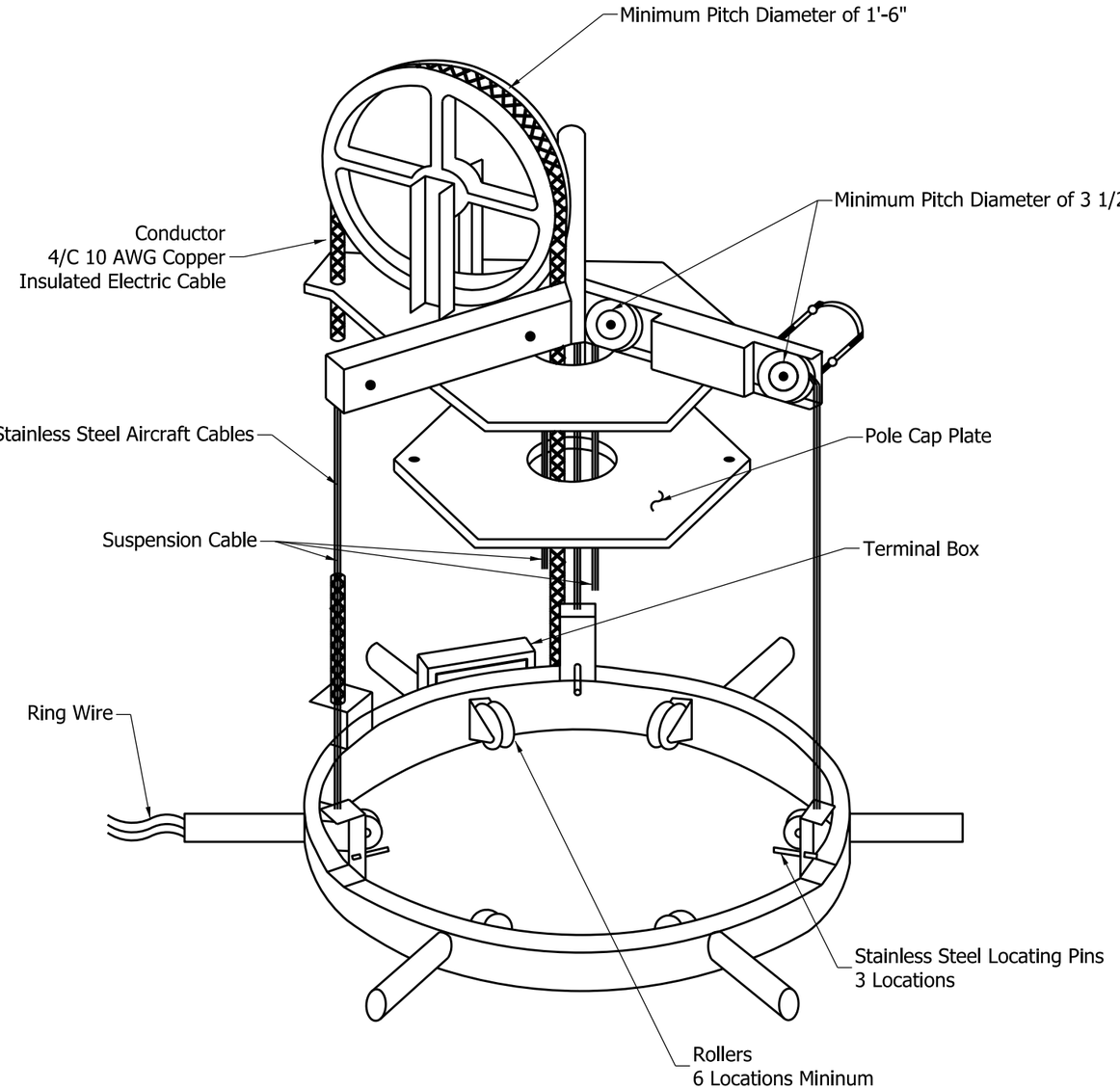

RING ASSEMBLY

INDIANA DEPARTMENT OF TRANSPORTATION

HIGHWAY ILLUMINATION TOWER
DETAILS BOTTOM LATCH

SEPTEMBER 2010

STANDARD DRAWING NO. E 807-LTHI-05

RICHARD L. VanCLEAVE
REGISTERED
No. 9750
STATE OF INDIANA
PROFESSIONAL ENGINEER

DESIGN STANDARDS ENGINEER

/s/ Richard L. Vancleave 09/01/10
DESIGN STANDARDS ENGINEER DATE

/s/ Mark A. Miller 09/01/10
CHIEF HIGHWAY ENGINEER DATE

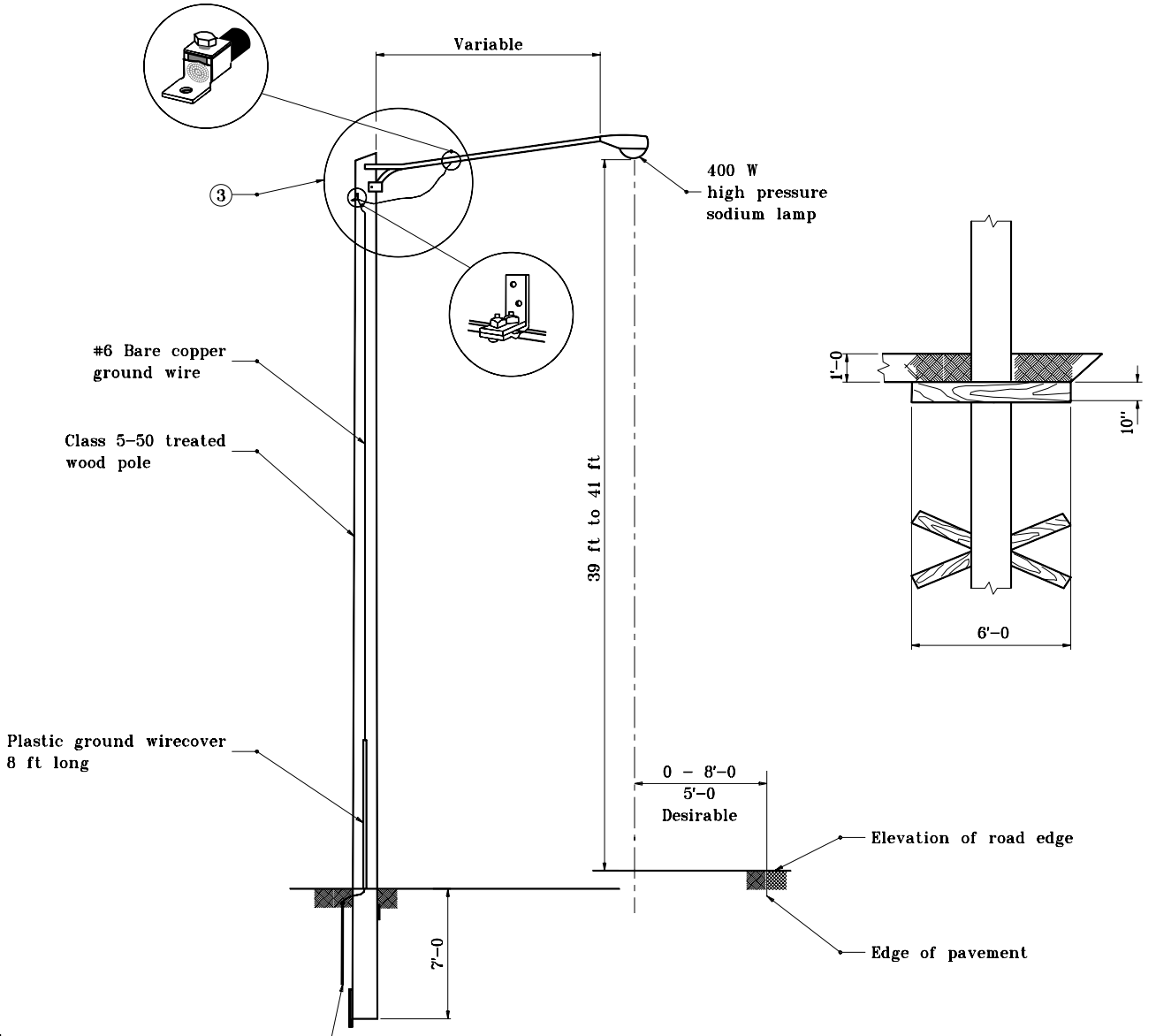

GENERAL NOTES

1. Install 2" x 10" x 6'–0 treated plank 1'–0 below ground surface with inner face directly against pole outer face to be placed against undisturbed earth as near as practicable.

2. Pole key anchor and plank stabilizer to be installed at each major change of overhead line direction and at each end of lighting distribution.

(3) See Section on Standard Drawing E 807–LHTI–07.

INDIANA DEPARTMENT OF TRANSPORTATION

TEMPORARY HIGHWAY ILLUMINATION DETAILS

JANUARY 2000

STANDARD DRAWING NO. **E 807–LTHI–06**

ANTHONY L. UREMOVICH REGISTERED No. 18095 STATE OF INDIANA PROFESSIONAL ENGINEER

DESIGN STANDARDS ENGINEER

/s/ Anthony L. Uremovich — DESIGN STANDARDS ENGINEER — 1–03–00 DATE

/s/ Firooz Zandi — CHIEF HIGHWAY ENGINEER — 1–03–00 DATE

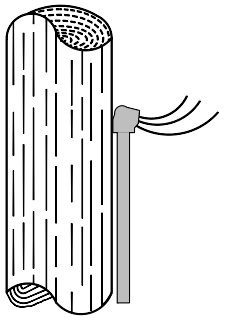

Conduit Riser

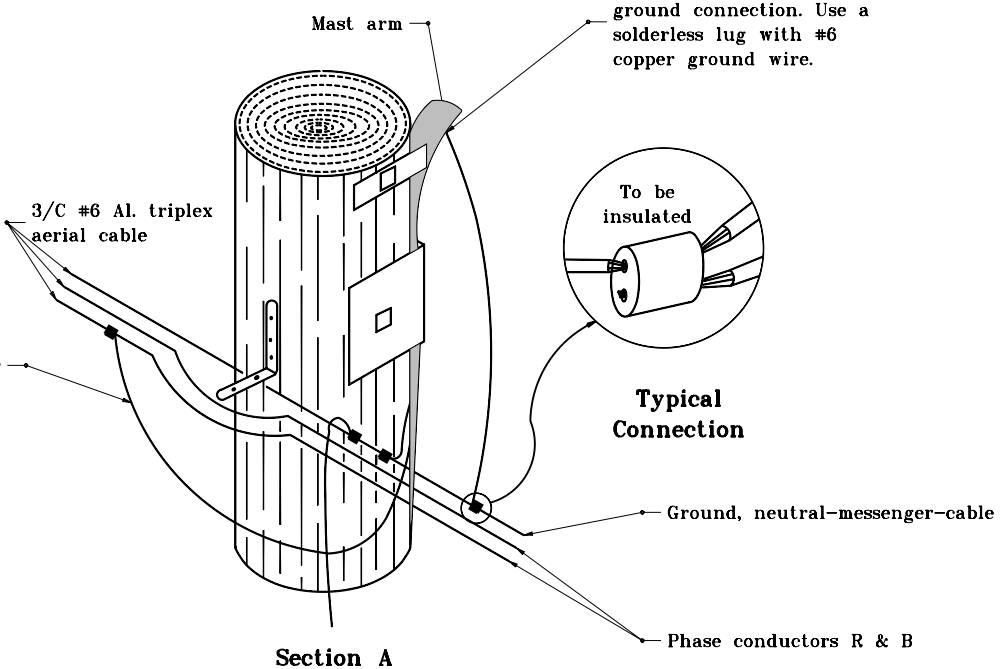

Typical Connection

Section A
Typical Aerial Luminaire Connection with Ground

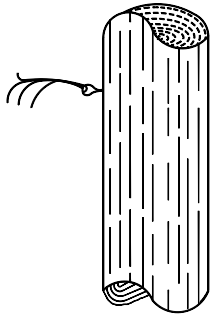

Aerial Cable Termination

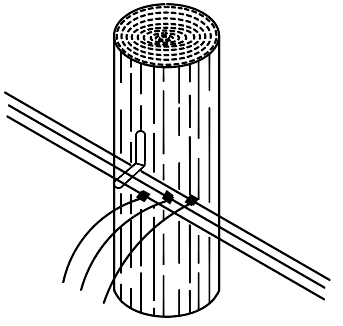

Typical Circuit Connection to Aerial Cable

INDIANA DEPARTMENT OF TRANSPORTATION

TEMPORARY HIGHWAY ILLUMINATION DETAILS

JANUARY 2000

STANDARD DRAWING NO. **E 807-LTHI-07**

ANTHONY L. UREMOVICH REGISTERED No. 18095 STATE OF INDIANA PROFESSIONAL ENGINEER

DESIGN STANDARDS ENGINEER

/s/ Anthony L. Uremovich 1-03-00
DESIGN STANDARDS ENGINEER — DATE

/s/ Firooz Zandi 1-03-00
CHIEF HIGHWAY ENGINEER — DATE

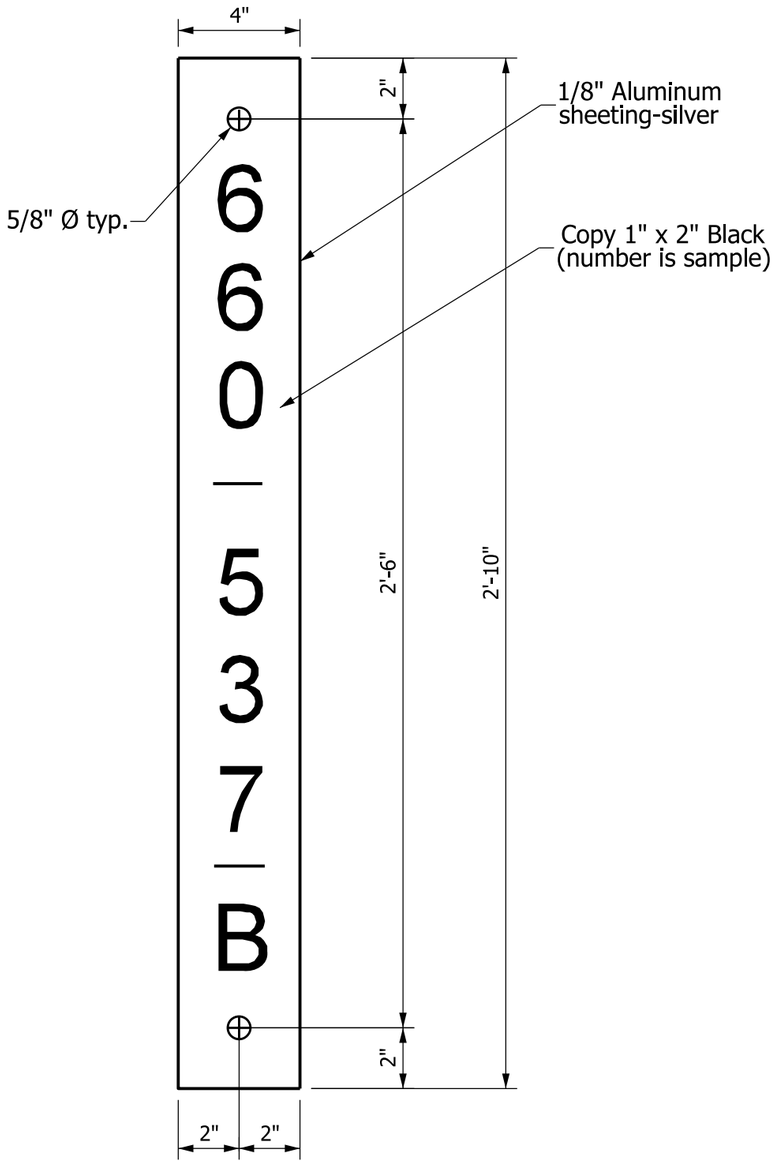

ID PLATE DETAIL

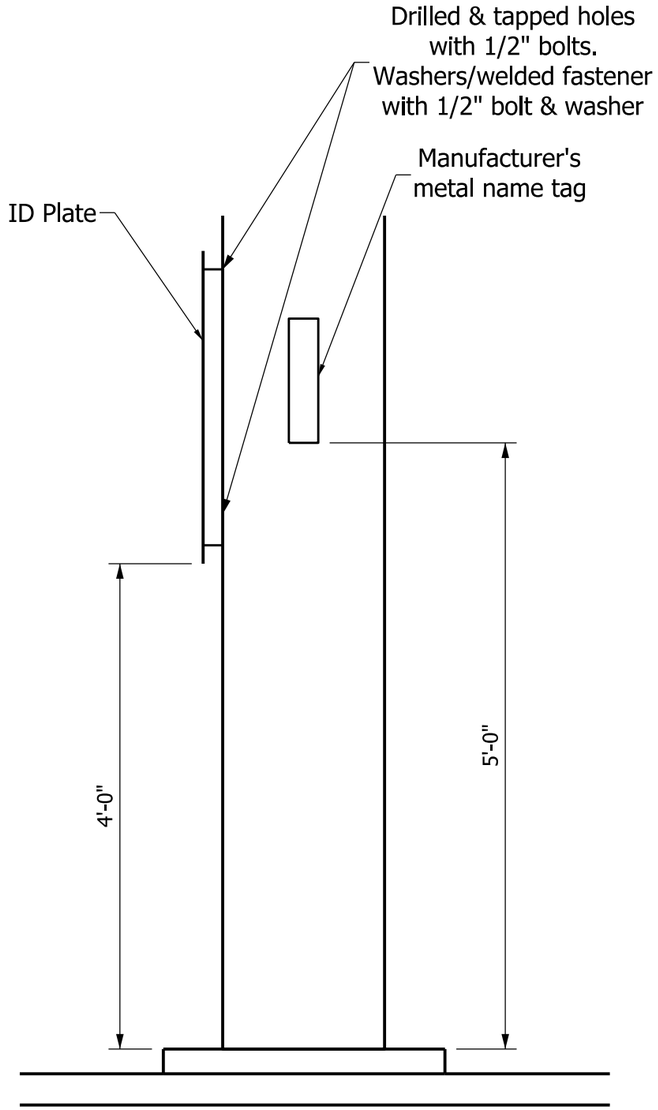

HIGH MAST POLE

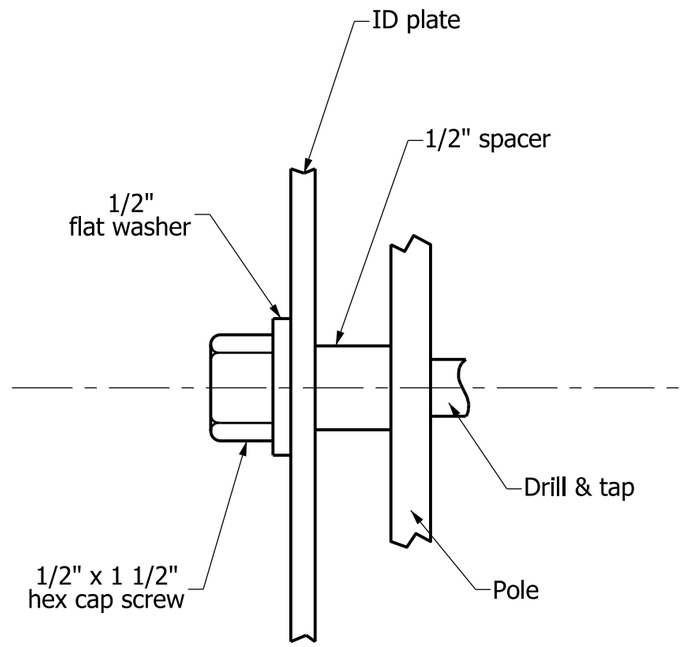

MOUNTING DETAIL

INDIANA DEPARTMENT OF TRANSPORTATION

HIGH MAST POLE
ID PLATES

SEPTEMBER 2010

STANDARD DRAWING NO. E 807-LTHM-01

RICHARD L. VanCLEAVE
REGISTERED
No. 9750
STATE OF INDIANA
PROFESSIONAL ENGINEER

DESIGN STANDARDS ENGINEER

/s/ Richard L. VanCleave *09/01/10*
DESIGN STANDARDS ENGINEER — DATE

/s/ Mark A. Miller *09/01/10*
CHIEF HIGHWAY ENGINEER — DATE

NOTES:

1. Holes shall be 3/8" dia., 1/2" outer circle, staggered.
2. The base plate of the high mast pole and exposed anchor bolts shall be enclosed by the aluminum skirt.

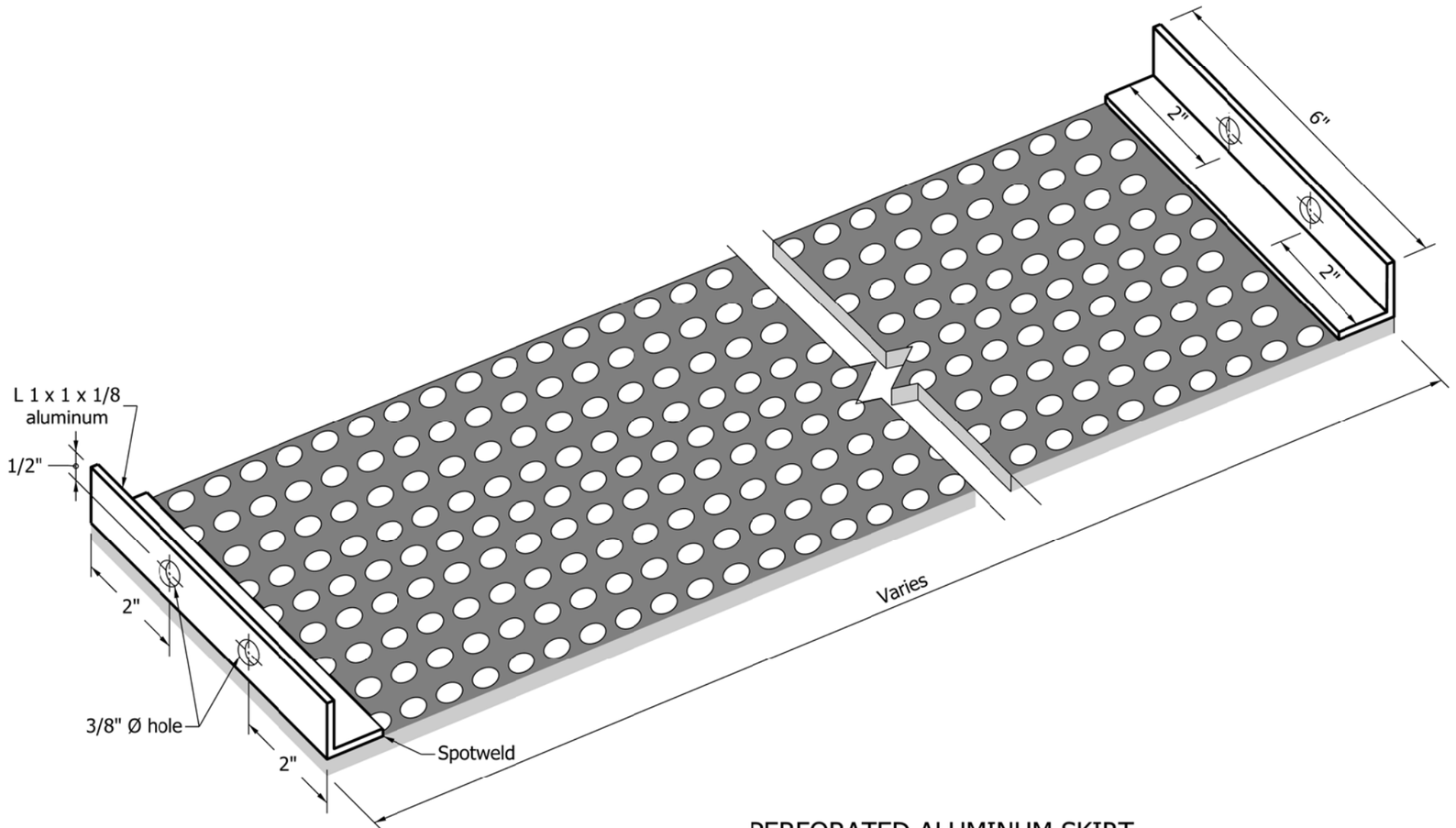

PERFORATED ALUMINUM SKIRT

INDIANA DEPARTMENT OF TRANSPORTATION

HIGH MAST POLE
PERFORATED ALUMINUM SKIRT

SEPTEMBER 2010

STANDARD DRAWING NO. E 807-LTHM-02

RICHARD L. VanCLEAVE
REGISTERED
No. 9750
STATE OF INDIANA
PROFESSIONAL ENGINEER

DESIGN STANDARDS ENGINEER

/s/ Richard L. Vancleave 09/01/10
DESIGN STANDARDS ENGINEER DATE

/s/ Mark A. Miller 09/01/10
CHIEF HIGHWAY ENGINEER DATE

NOTES:

1. See Standard Drawing E 807-LTHM-04 for Subgrade and ground preparation requirements.
2. The slope grading around the concrete pad shall be as shown unless otherwise directed.

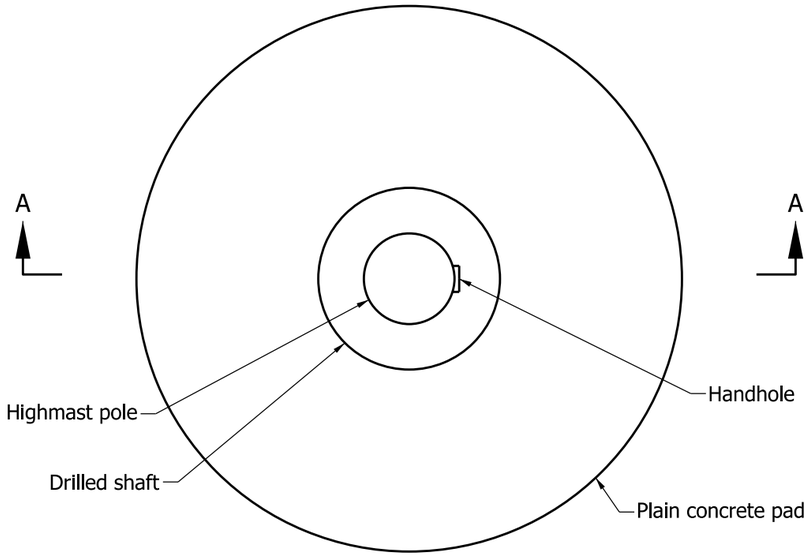

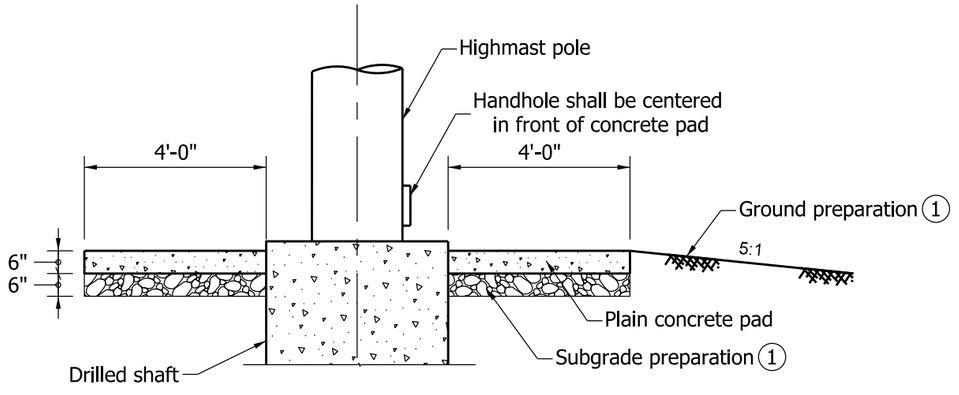

SECTION A-A

INDIANA DEPARTMENT OF TRANSPORTATION

LIGHTING HIGH MAST POLE
CONCRETE PAD

SEPTEMBER 2010

STANDARD DRAWING NO. E 807-LTHM-03

RICHARD L. VanCLEAVE
REGISTERED
No. 9750
STATE OF INDIANA
PROFESSIONAL ENGINEER

DESIGN STANDARDS ENGINEER

/s/ Richard L. Vancleave 09/01/10
DESIGN STANDARDS ENGINEER DATE

/s/ Mark A. Miller 09/01/10
CHIEF HIGHWAY ENGINEER DATE

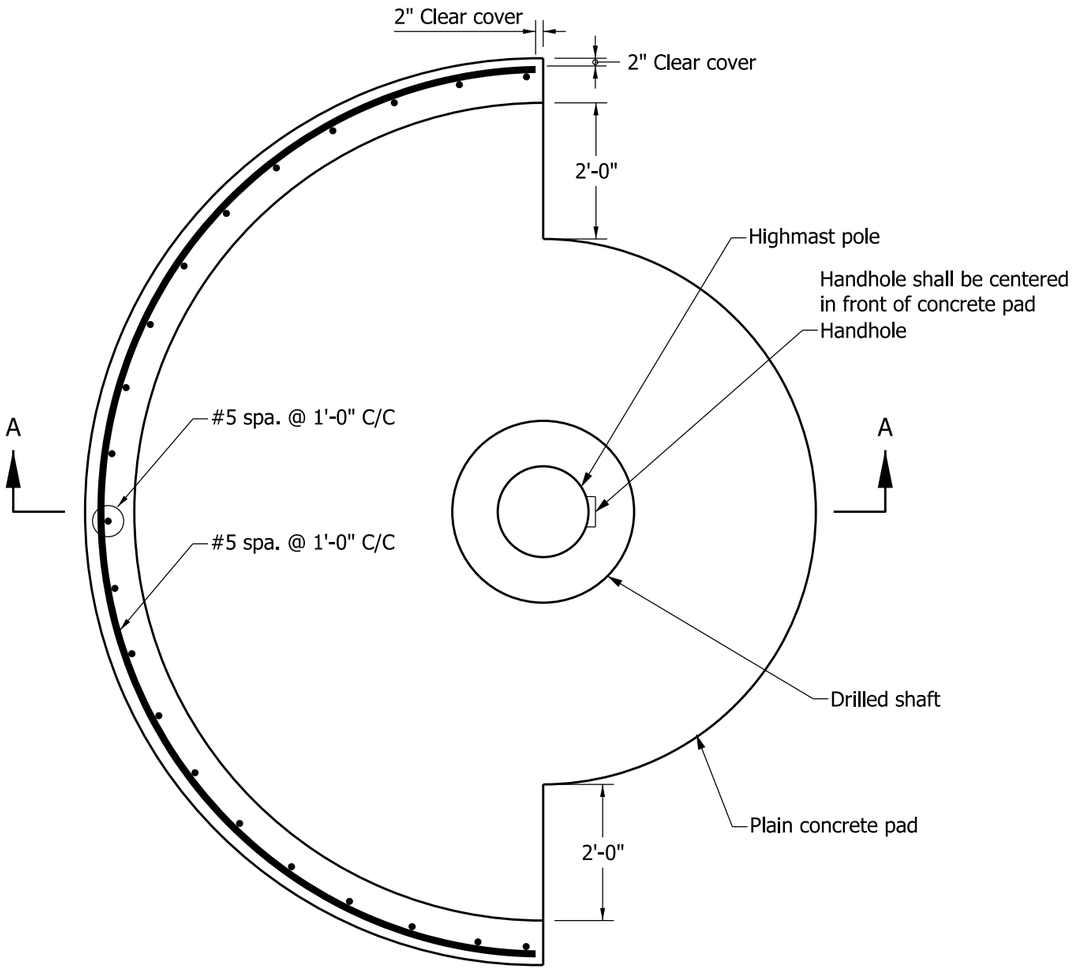

NOTES:

1. After excavation, the ground shall be compacted by means of a portable vibratory roller. Soft soil which does not compact shall be removed. All excavated material shall be replaced with compacted aggregate No. 53.
2. See Standard Drawing E 807-LTHM-03 for concrete pad where no retaining wall is required.
3. See Standard Drawing E 703-BRST-01 for bar bending details.
4. All reinforcing bars shall be epoxy coated.

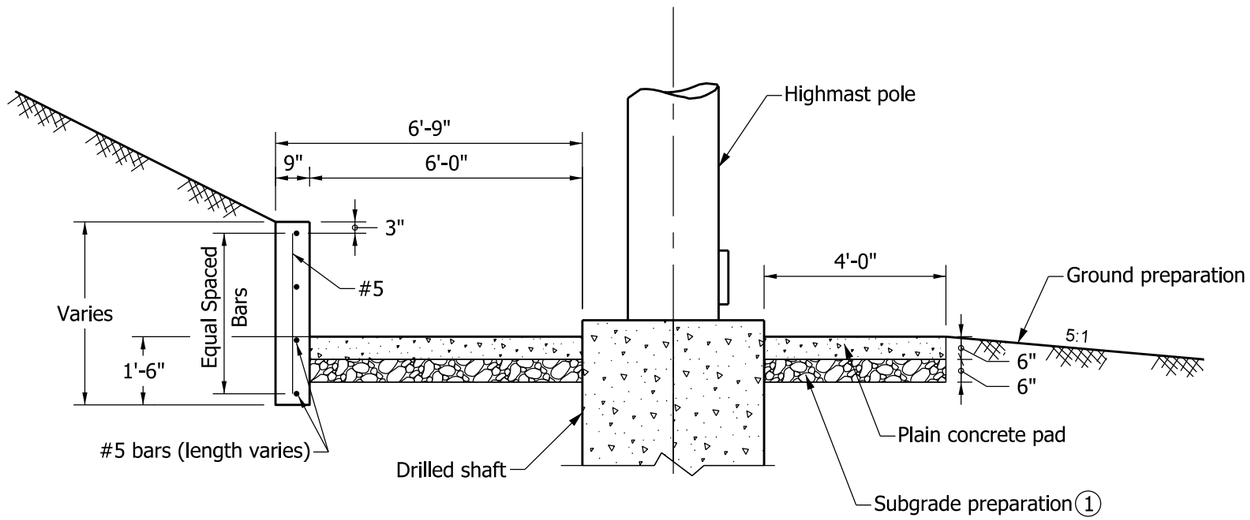

SECTION A-A

INDIANA DEPARTMENT OF TRANSPORTATION

LIGHTING HIGH MAST POLE
CONCRETE PAD
WITH RETAINING WALL

SEPTEMBER 2010

STANDARD DRAWING NO. E 807-LTHM-04

RICHARD L. VanCLEAVE REGISTERED No. 9750 STATE OF INDIANA PROFESSIONAL ENGINEER

DESIGN STANDARDS ENGINEER

/s/ Richard L. Vancleave 09/01/10
DESIGN STANDARDS ENGINEER DATE

/s/ Mark A. Miller 09/01/10
CHIEF HIGHWAY ENGINEER DATE

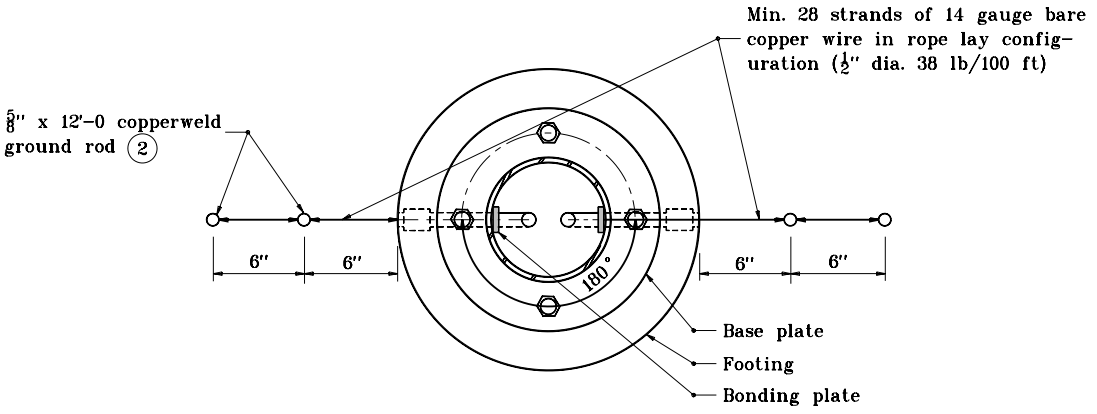

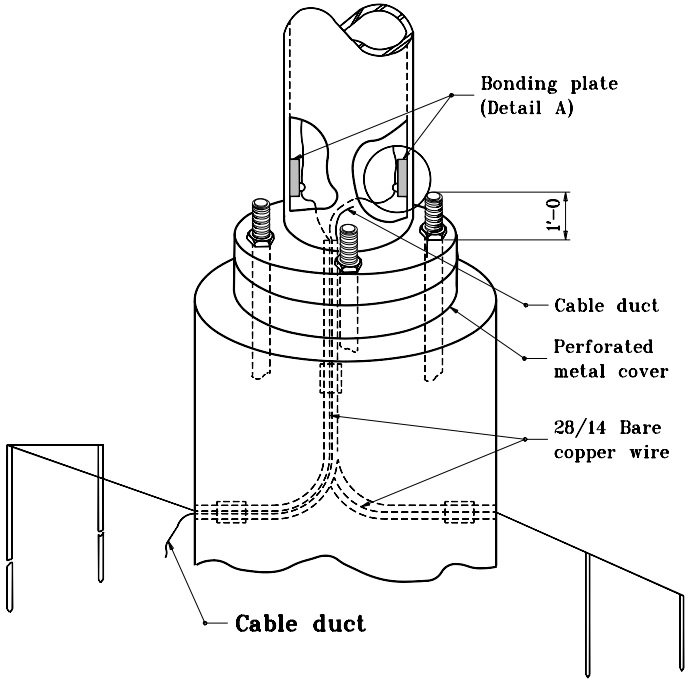

GENERAL NOTES

1. Shop drawings shall be submitted on lightning rod and connection details. Drawings are for informational purposes only. Only one lightning rod is required per structure.

(2) Grounding rod must be located a min. of 6 ft from base at a min. of 2 ft below grade.

For bonding plate detail, see Standard Drawing No. E 807-LTLR-02.

INDIANA DEPARTMENT OF TRANSPORTATION

LIGHTNING ROD TYPICAL DETAILS

MARCH 1995

STANDARD DRAWING NO. **E 807-LTLR-01**

ANTHONY L. UREMOVICH REGISTERED No. 18095 STATE OF INDIANA PROFESSIONAL ENGINEER

DESIGN STANDARDS ENGINEER

DETAILS PLACED IN THIS FORMAT 7-27-99

/s/ Anthony L. Uremovich 7-27-99
DESIGN STANDARDS ENGINEER DATE

/s/ Firooz Zandi 7-27-99
CHIEF HIGHWAY ENGINEER DATE

ORIGINALLY APPROVED 3-01-95

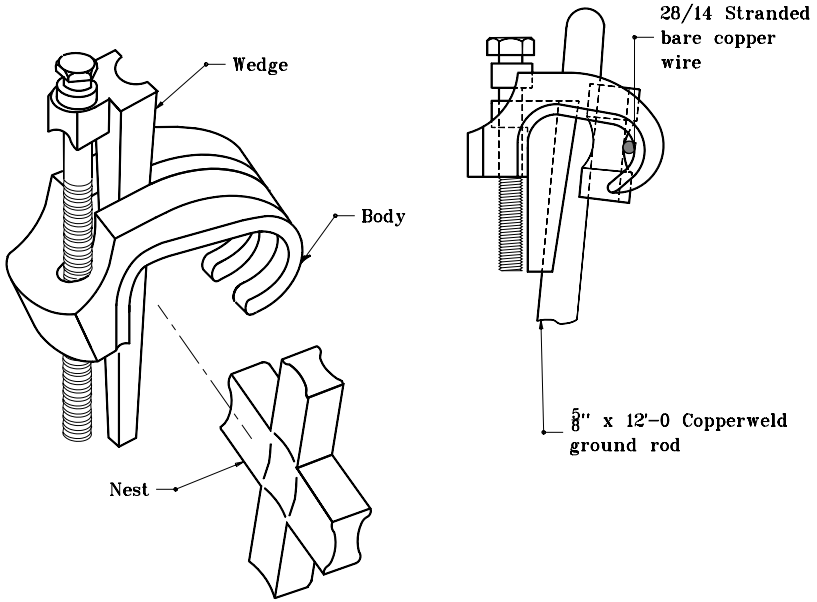

GROUNDING GRID CONNECTOR

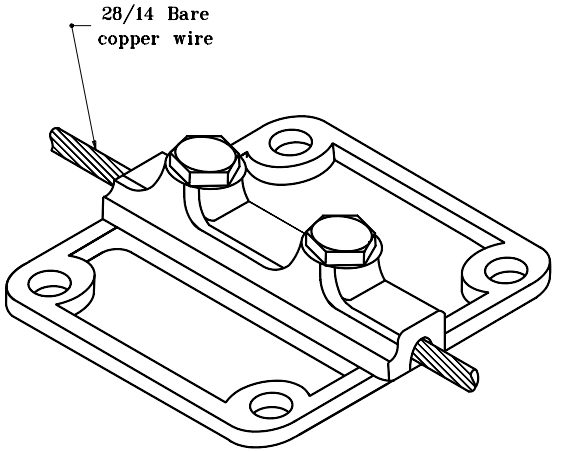

BONDING PLATE
(DETAIL A)

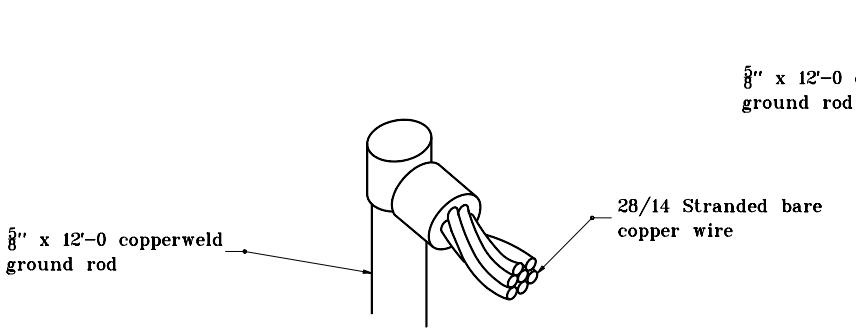

TOP CONNECTION

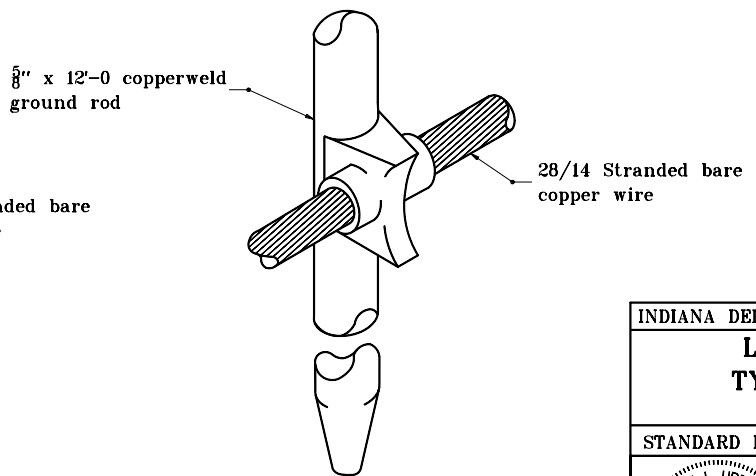

SIDE CONNECTION

THERMOWELD PROCESS

INDIANA DEPARTMENT OF TRANSPORTATION

LIGHTNING ROD TYPICAL DETAILS

MARCH 1995

STANDARD DRAWING NO. **E 807-LTLR-02**

ANTHONY L. UREMOVICH REGISTERED No. 18095 STATE OF INDIANA PROFESSIONAL ENGINEER

DESIGN STANDARDS ENGINEER

DETAILS PLACED IN THIS FORMAT 11-15-99

/s/ Anthony L. Uremovich 11-15-99
DESIGN STANDARDS ENGINEER DATE

/s/ Firooz Zandi 11-15-99
CHIEF HIGHWAY ENGINEER DATE

ORIGINALLY APPROVED 3-01-95

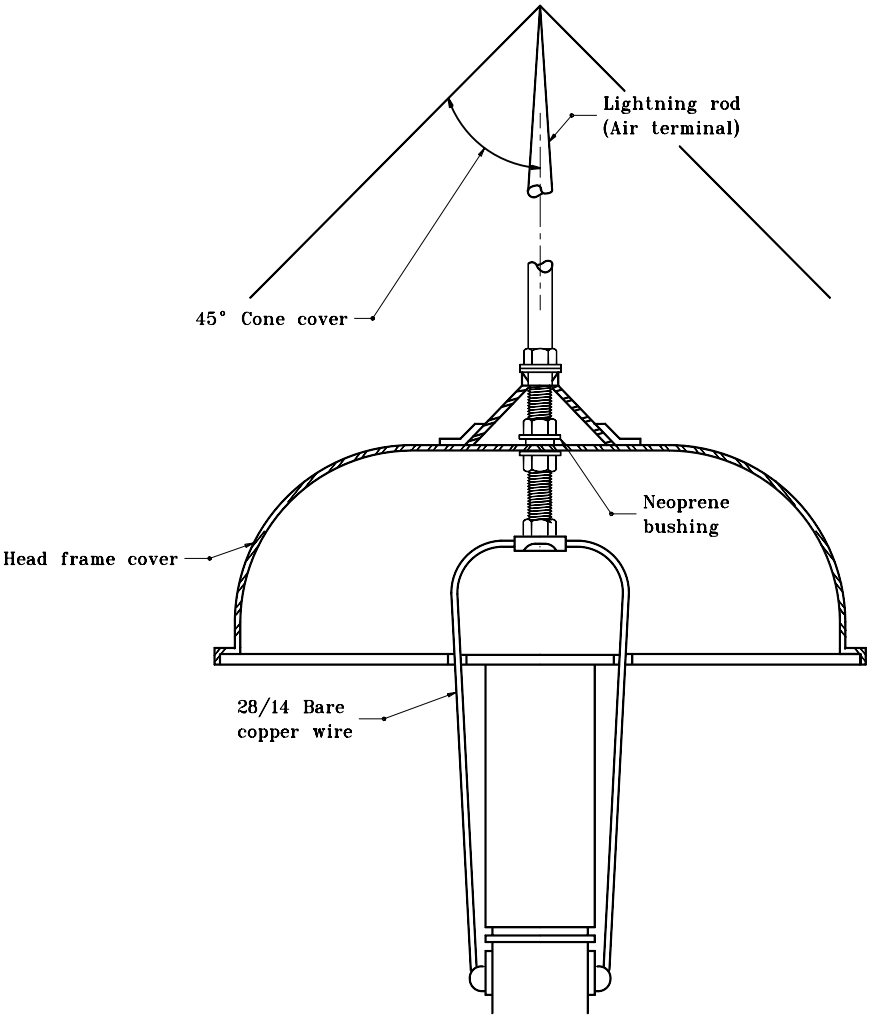

CENTER HOOD MOUNT

INDIANA DEPARTMENT OF TRANSPORTATION

LIGHTNING ROD TYPICAL DETAILS

MARCH 1995

STANDARD DRAWING NO. **E 807-LTLR-03**

ANTHONY L. UREMOVICH REGISTERED No. 18095 STATE OF INDIANA PROFESSIONAL ENGINEER

DESIGN STANDARDS ENGINEER

DETAILS PLACED IN THIS FORMAT 11-15-99

/s/ Anthony L. Uremovich 11-15-99
DESIGN STANDARDS ENGINEER DATE

/s/ Firooz Zandi 11-15-99
CHIEF HIGHWAY ENGINEER DATE

ORIGINALLY APPROVED 3-01-95

NOTES

(1) See Standard Drawing E 807-LTLR-02 for Detail A.

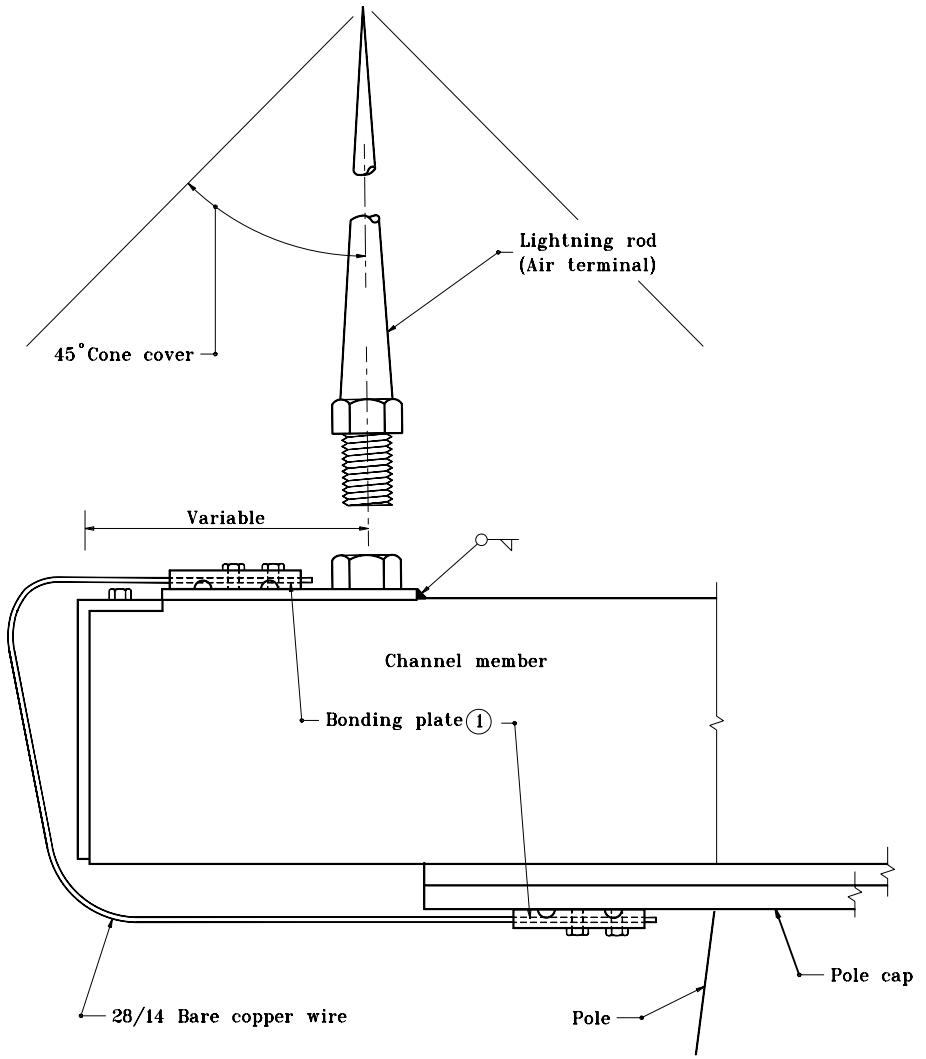

CHANNEL MOUNT

INDIANA DEPARTMENT OF TRANSPORTATION

LIGHTNING ROD TYPICAL DETAILS

MARCH 1995

STANDARD DRAWING NO. E 807-LTLR-04

ANTHONY L. UREMOVICH REGISTERED No. 18095 STATE OF INDIANA PROFESSIONAL ENGINEER

DESIGN STANDARDS ENGINEER

DETAILS PLACED IN THIS FORMAT	11-15-99
/s/ Anthony L. Uremovich, DESIGN STANDARDS ENGINEER	11-15-99
/s/ Firooz Zandi, CHIEF HIGHWAY ENGINEER	11-15-99
ORIGINALLY APPROVED	3-01-95

POLE DATA SCHEDULE

POLE HEIGHT (E.M.H.)	POLE SHAFT DATA						BASE PLATE			ANCHOR BOLT		
	No. of Sec.	Sec.	Minimum Diameter in inches		Min. Wall Thickness in inches	Section Length in Feet	Size in inches	Bolt Circle (in.)	Thick-ness (in.)	No. Req'd.	Diameter (in.)	Length (in.)
			Base	Top								
100'	2	A	24.50	17.16	0.250	52.42	37.50	31.50	2.25	6	2.25	90
		B	18.00	10.88	0.1875	50.89						
105'	3	A	21.50	18.14	0.3125	23.98	37.50	31.50	2.25	6	2.25	90
		B	19.00	13.23	0.1875	41.21						
		C	14.00	7.55	0.1875	46.07						
110'	3	A	22.50	19.13	0.3125	24.10	37.50	31.50	2.25	6	2.25	90
		B	20.00	13.72	0.1875	44.84						
		C	14.50	7.85	0.1875	47.50						
115'	3	A	23.50	20.11	0.3125	24.23	37.50	31.50	2.25	6	2.25	90
		B	21.00	14.21	0.1875	48.48						
		C	15.00	8.15	0.1875	48.93						
120'	3	A	26.00	22.07	0.3125	28.05	37.50	31.50	2.25	6	2.25	90
		B	23.00	16.18	0.1875	48.73						
		C	17.00	9.95	0.1875	50.36						
125'	3	A	25.00	21.09	0.3750	27.92	37.50	31.50	2.25	6	2.25	90
		B	22.00	14.70	0.1875	52.11						
		C	15.50	8.25	0.1875	51.79						
130'	3	A	25.00	20.11	0.3750	34.94	37.50	31.50	2.25	6	2.25	90
		B	21.00	14.21	0.1875	48.48						
		C	15.00	7.55	0.1875	53.21						
135'	3	A	26.00	20.11	0.3750	42.09	37.50	31.50	2.25	6	2.25	90
		B	21.00	14.21	0.1875	48.48						
		C	15.00	7.85	0.1875	51.07						
140'	3	A	26.80	20.60	0.3750	44.29	37.50	31.50	2.25	6	2.25	90
		B	21.50	14.21	0.1875	52.05						
		C	15.00	7.95	0.1875	50.36						
145'	3	A	27.00	20.60	0.4375	45.72	39.50	33.50	2.25	8	2.25	90
		B	21.50	14.21	0.1875	52.05						
		C	15.00	7.45	0.1875	53.93						
150'	3	A	28.00	20.60	0.4375	52.86	39.50	33.50	2.25	8	2.25	90
		B	21.50	14.21	0.1875	52.05						
		C	15.00	7.75	0.1875	51.79						
155'	4	A	28.50	24.04	0.4375	31.87	39.50	33.50	2.25	8	2.25	90
		B	25.00	19.13	0.1875	41.96						
		C	20.00	14.21	0.1875	41.34						
		D	15.00	7.93	0.1875	50.54						

INDIANA DEPARTMENT OF TRANSPORTATION

LIGHTING HIGH MAST POLE
POLE DATA SCHEDULE (1 of 2)
POLE HEIGHTS 100' - 155'
SEPTEMBER 2010

STANDARD DRAWING NO. E 807-LTPD-01

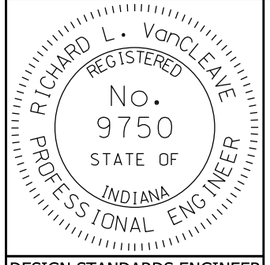

DESIGN STANDARDS ENGINEER

/s/ Richard L. Vancleave 09/01/10
DESIGN STANDARDS ENGINEER DATE

/s/ Mark A. Miller 09/01/10
CHIEF HIGHWAY ENGINEER DATE

POLE DATA SCHEDULE

POLE HEIGHT (E.M.H.)	POLE SHAFT DATA						BASE PLATE			ANCHOR BOLT		
	No. of Sec.	Sec.	Minimum Diameter in inches		Min. Wall Thickness in inches	Section Length in Feet	Size in inches	Bolt Circle (in.)	Thick-ness (in.)	No. Req'd.	Diameter (in.)	Length (in.)
			Base	Top								
160'	4	A	28.80	25.02	0.4375	27.00	39.50	33.50	2.25	8	2.25	90
		B	26.00	19.62	0.1875	45.59						
		C	20.50	13.72	0.1875	48.42						
		D	14.50	7.53	0.1875	49.82						
165'	4	A	29.50	25.51	0.5000	28.49	46	40.00	2.25	8	2.25	90
		B	26.50	19.62	0.1875	49.17						
		C	20.50	13.72	0.1875	48.42						
		D	14.50	7.53	0.1875	49.82						
170'	4	A	30.50	25.02	0.5000	39.14	46	40.00	2.25	8	2.25	90
		B	26.00	20.11	0.1875	42.09						
		C	21.00	14.21	0.1875	48.48						
		D	15.00	7.83	0.1875	51.25						
175'	4	A	31.00	25.02	0.5000	42.71	46	40.00	2.25	8	2.25	90
		B	26.00	19.62	0.1875	45.59						
		C	20.50	13.72	0.1875	48.42						
		D	14.50	7.63	0.1875	49.11						
180'	4	A	32.00	25.02	0.5000	49.85	46	40.00	2.25	8	2.25	90
		B	26.00	19.13	0.1875	49.10						
		C	20.00	13.23	0.1875	48.35						
		D	14.00	7.93	0.1875	43.39						
185'	4	A	32.50	26.00	0.5000	46.41	46	40.00	2.25	8	2.25	90
		B	27.00	20.11	0.1875	49.23						
		C	21.00	14.21	0.1875	48.48						
		D	15.00	7.73	0.1875	51.96						
190'	5	A	33.00	28.95	0.6250	28.92	48	42.00	2.25	12	2.25	90
		B	30.00	24.04	0.1875	42.59						
		C	25.00	19.13	0.1875	41.96						
		D	20.00	14.21	0.1875	41.34						
		E	15.00	7.90	0.1875	50.71						
195'	5	A	33.50	28.95	0.6250	32.50	48	42.00	2.25	12	2.25	90
		B	30.00	24.04	0.1875	42.59						
		C	25.00	19.13	0.1875	41.96						
		D	20.00	14.21	0.1875	41.34						
		E	15.00	7.70	0.1875	52.14						
200'	5	A	34.00	28.89	0.6250	36.51	48	42.00	2.25	12	2.25	90
		B	30.00	23.55	0.2188	46.09						
		C	24.50	18.63	0.1875	41.90						
		D	19.50	13.72	0.1875	41.27						
		E	14.50	7.56	0.1875	49.55						

INDIANA DEPARTMENT OF TRANSPORTATION

LIGHTING HIGH MAST POLE
POLE DATA SCHEDULE (2 of 2)
POLE HEIGHTS 160' - 200'
SEPTEMBER 2010

STANDARD DRAWING NO. E 807-LTPD-02

RICHARD L. VanCLEAVE REGISTERED No. 9750 STATE OF INDIANA PROFESSIONAL ENGINEER

DESIGN STANDARDS ENGINEER

/s/ Richard L. Vancleave 09/01/10
DESIGN STANDARDS ENGINEER DATE

/s/ Mark A. Miller 09/01/10
CHIEF HIGHWAY ENGINEER DATE

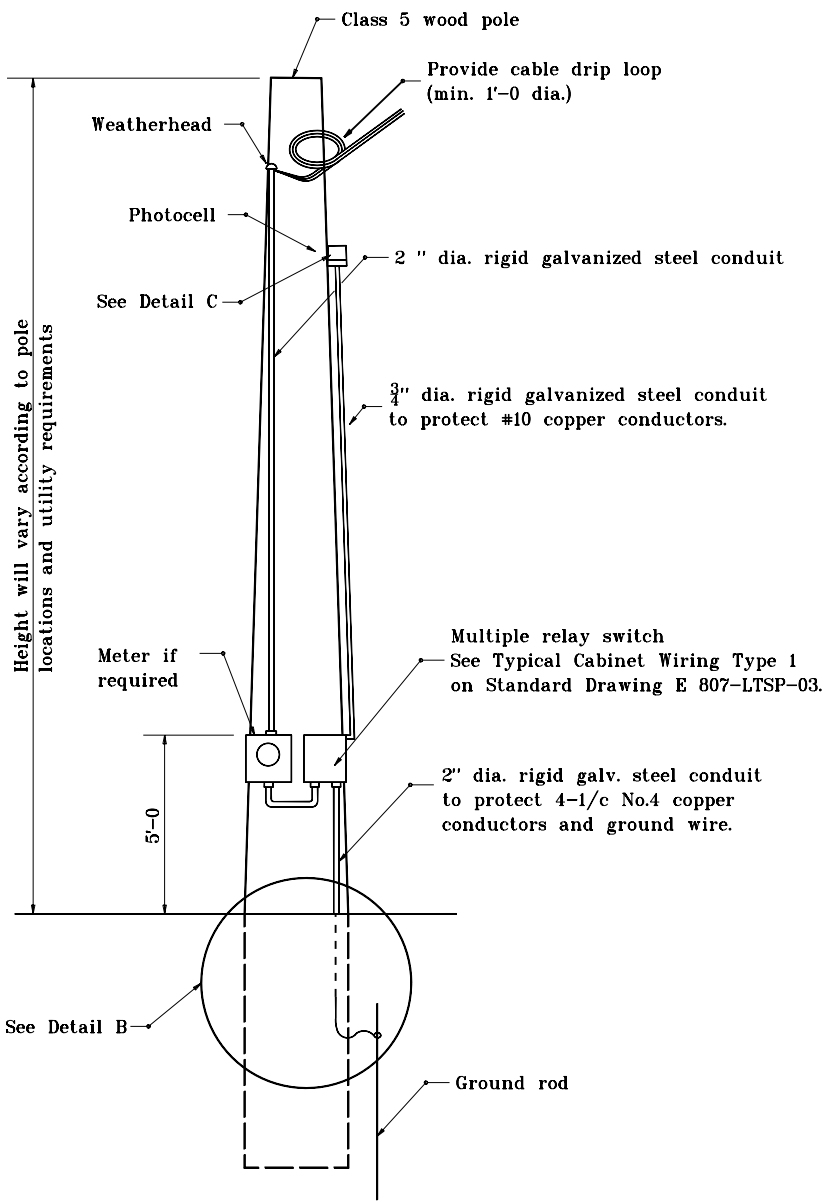

SERVICE POINT
TYPE I

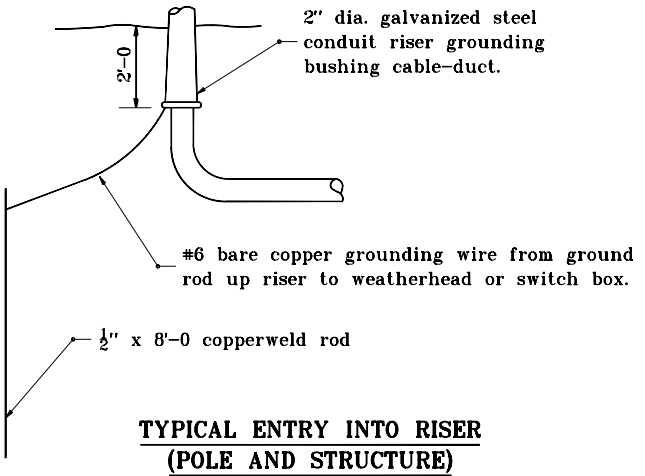

TYPICAL ENTRY INTO RISER
(POLE AND STRUCTURE)

DETAIL B

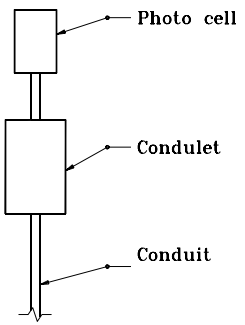

DETAIL C

INDIANA DEPARTMENT OF TRANSPORTATION

LIGHT SERVICE POINT DETAILS

SEPTEMBER 1998

STANDARD DRAWING NO. **E 807-LTSP-01**

ANTHONY L. UREMOVICH REGISTERED No. 18095 STATE OF INDIANA PROFESSIONAL ENGINEER

DESIGN STANDARDS ENGINEER

DETAILS PLACED IN THIS FORMAT	11-15-99
/s/ Anthony L. Uremovich	11-15-99
DESIGN STANDARDS ENGINEER	DATE
/s/ Firooz Zandi	11-15-99
CHIEF HIGHWAY ENGINEER	DATE
ORIGINALLY APPROVED	9-01-98

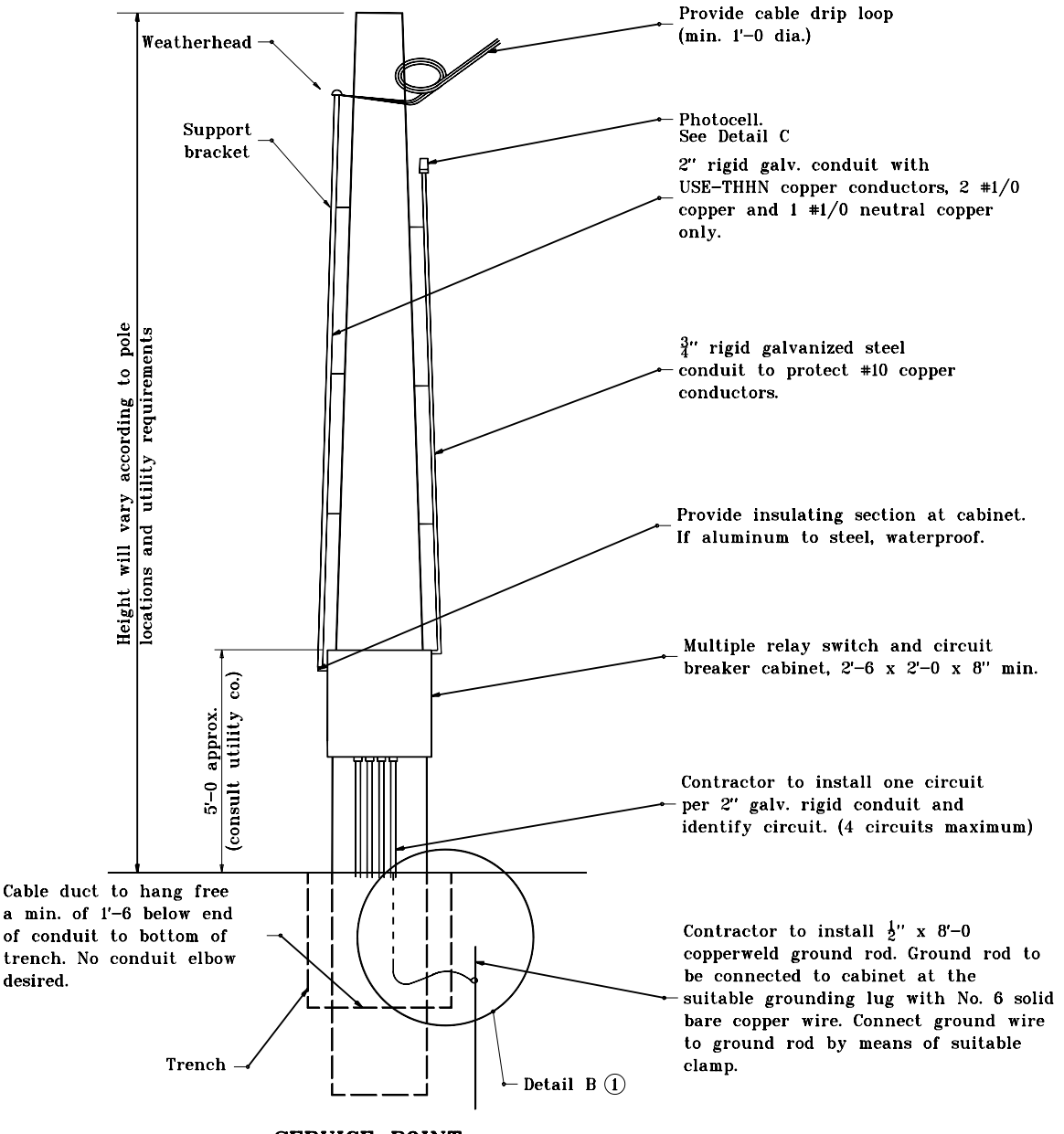

SERVICE POINT
TYPE II

Notes:

(1) See Standard Drawing E 807-LTSP-01 for Detail B.

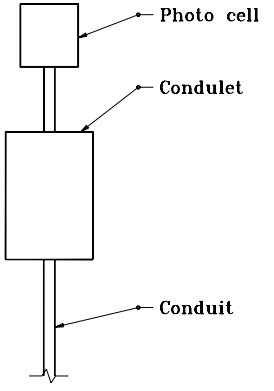

DETAIL C

INDIANA DEPARTMENT OF TRANSPORTATION

LIGHT SERVICE POINT DETAILS

JANUARY 2000

STANDARD DRAWING NO. **E 807-LTSP-02**

ANTHONY L. UREMOVICH REGISTERED No. 18095 STATE OF INDIANA PROFESSIONAL ENGINEER

DESIGN STANDARDS ENGINEER

/s/ Anthony L. Uremovich 1-03-00
DESIGN STANDARDS ENGINEER — DATE

/s/ Firooz Zandi 1-03-00
CHIEF HIGHWAY ENGINEER — DATE

GENERAL NOTES

To Photo Control:
240 V ac required for 240/480 V ac supply.
120 V ac required for 120/240 V ac supply.

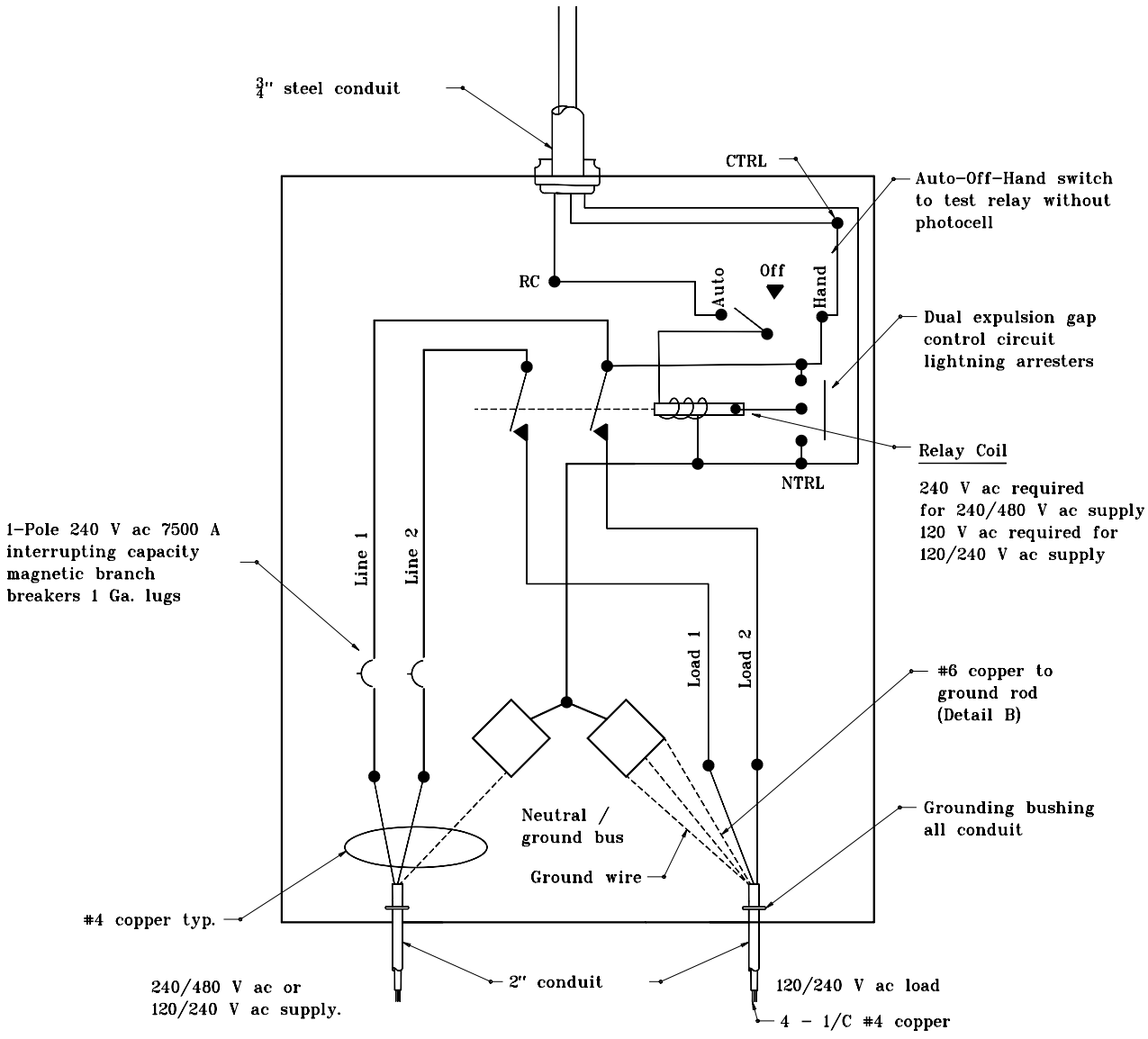

TYPICAL CABINET WIRING, TYPE 1

INDIANA DEPARTMENT OF TRANSPORTATION

LIGHT SERVICE POINT DETAILS

JANUARY 2000

STANDARD DRAWING NO. **E 807-LTSP-03**

ANTHONY L. UREMOVICH REGISTERED No. 18095 STATE OF INDIANA PROFESSIONAL ENGINEER

DESIGN STANDARDS ENGINEER

/s/ Anthony L. Uremovich 1-03-00
DESIGN STANDARDS ENGINEER — DATE

/s/ Firooz Zandi 1-03-00
CHIEF HIGHWAY ENGINEER — DATE

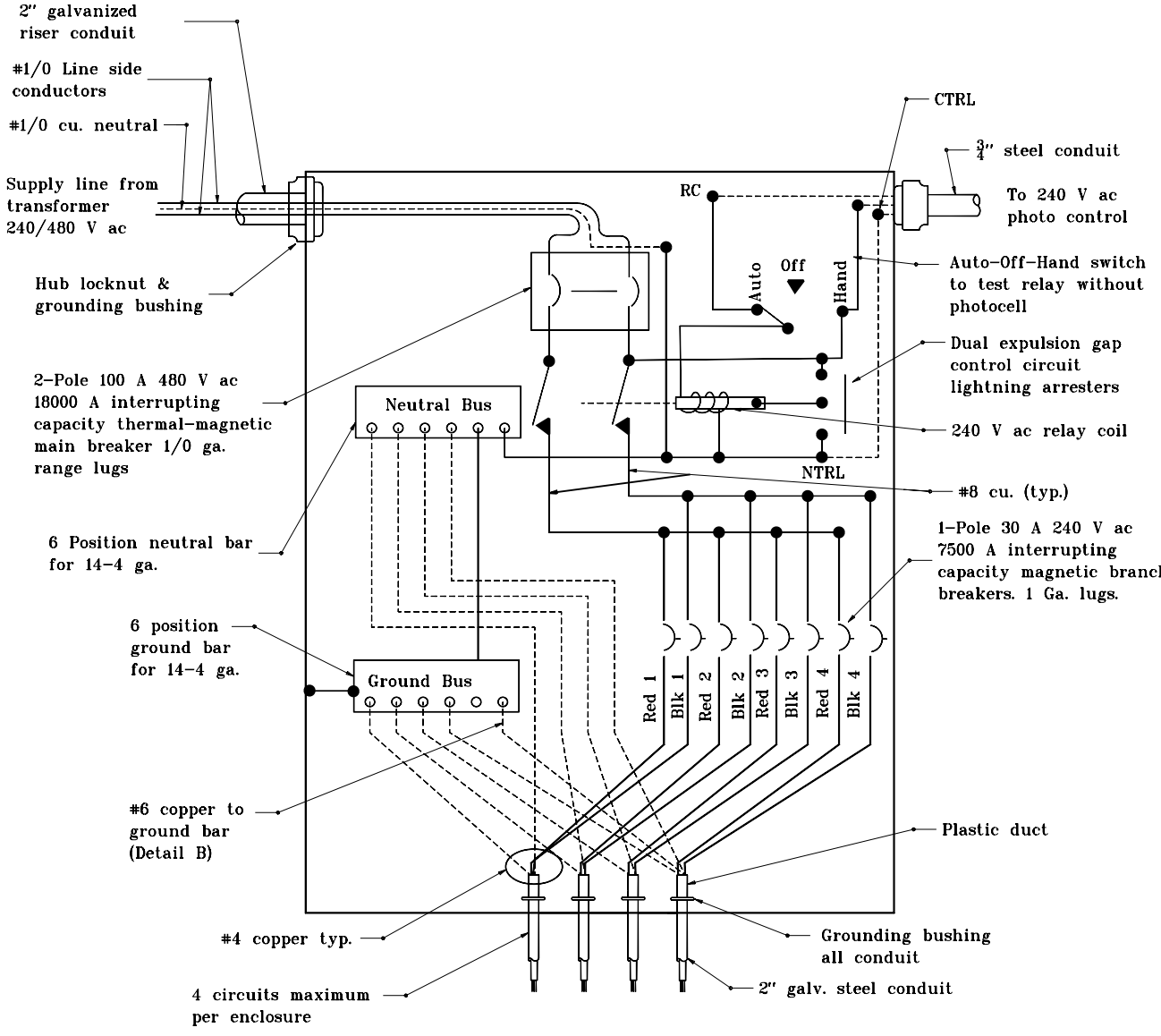

TYPICAL CABINET WIRING, TYPE II

INDIANA DEPARTMENT OF TRANSPORTATION

LIGHT SERVICE POINT DETAILS

JANUARY 2000

STANDARD DRAWING NO. **E 807-LTSP-04**

ANTHONY L. UREMOVICH REGISTERED No. 18095 STATE OF INDIANA PROFESSIONAL ENGINEER

DESIGN STANDARDS ENGINEER

/s/ Anthony L. Uremovich 1-03-00
DESIGN STANDARDS ENGINEER — DATE

/s/ Firooz Zandi 1-03-00
CHIEF HIGHWAY ENGINEER — DATE

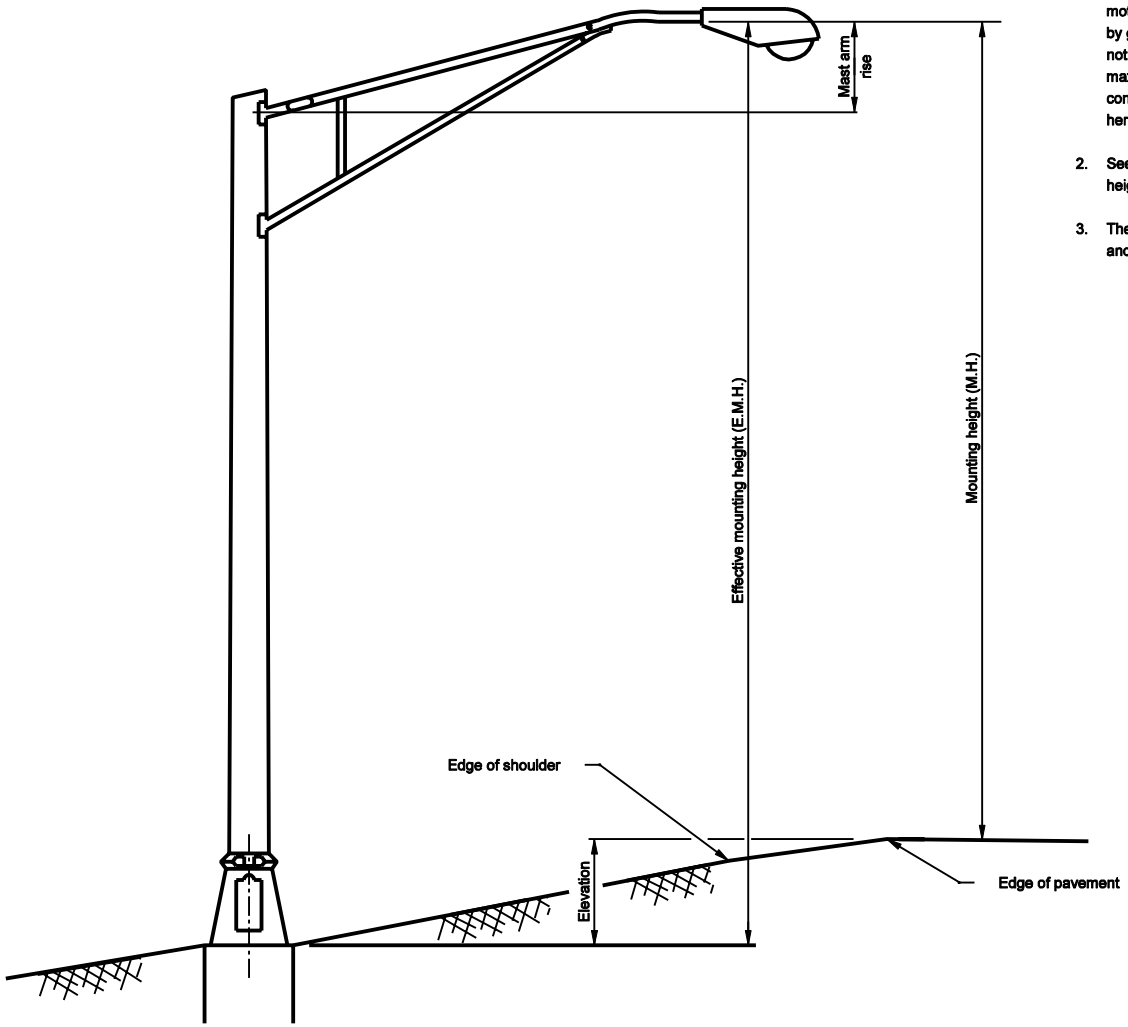

NOTES

1. Standard Drawings E 807-LTFD-02 through -04 represent the maximum roadside slope normally encountered without guardrail protection. If motorists are protected from the light standard by guardrail, the treatments found herein are not required. These drawings indicate the maximum slopes permissible on the fill. Any conditions more severe than those represented here shall be graded as directed.
2. See Standard Drawing E 807-LTST-02 for mounting heights and dimensions of corresponding components.
3. The front of the foundation shall face the roadway and the back shall face the right-of-way line.

INDIANA DEPARTMENT OF TRANSPORTATION

LIGHT STANDARD FOUNDATION

SEPTEMBER 2002

STANDARD DRAWING NO. E 807-LTST-01

RICHARD L. VanCLEAVE REGISTERED No. 9750 STATE OF INDIANA PROFESSIONAL ENGINEER

DESIGN STANDARDS ENGINEER

/s/ Richard L. VanCleave 9-03-02
DESIGN STANDARDS ENGINEER DATE

/s/ Richard K. Smulzer 9-03-02
CHIEF HIGHWAY ENGINEER DATE

FOR ROADWAY INSTALLATION (TRANSFORMER BASE)					
E.M.H. (FT.)	ARM LENGTH (FT.)	SHAFT			BASE PLATE
		BASE DIAMETER (IN.)	TOP DIAMETER (IN.)	THICKNESS (IN.)	BOLT CIRCLE (IN.)
25	5	8	4.5	0.188	11 1/2"
25	10	8	6	0.188	11 1/2"
25	15	8	6	0.188	11 1/2"
25	20	10	6	0.188	14 1/2"
25	25	10	6	0.250	14 1/2"
30	5	8	4.5	0.188	11 1/2"
30	10	8	6	0.188	11 1/2"
30	15	8	6	0.188	11 1/2"
30	20	10	6	0.188	14 1/2"
30	25	10	6	0.250	14 1/2"
35	5	8	4.5	0.188	11 1/2"
35	10	8	6	0.188	11 1/2"
35	15	8	6	0.188	11 1/2"
35	20	10	6	0.188	14 1/2"
35	25	10	6	0.250	14 1/2"
40	5	8	6	0.188	11 1/2"
40	10	8	6	0.188	11 1/2"
40	15	8	6	0.219	11 1/2"
40	20	10	6	0.219	14 1/2"
40	25	10	6	0.312	14 1/2"
45	5	8	6	0.219	11 1/2"
45	10	8	6	0.219	11 1/2"
45	15	8	6	0.219	11 1/2"
45	20	10	6	0.250	14 1/2"
45	25	10	6	0.312	14 1/2"

FOR BRIDGE DECK INSTALLATION (ANCHOR BASE)					
E.M.H. (FT.)	ARM LENGTH (FT.)	SHAFT			BASE PLATE
		BASE DIAMETER (IN.)	TOP DIAMETER (IN.)	THICKNESS (IN.)	BOLT CIRCLE (IN.)
25	5	8	4.5	0.188	11 1/2"
25	5	8	6	0.188	11 1/2"
30	5	8	4.5	0.188	11 1/2"
30	5	8	6	0.188	11 1/2"
35	5	8	4.5	0.188	11 1/2"
35	5	8	6	0.188	11 1/2"
40	5	8	6	0.188	11 1/2"
40	5	8	6	0.219	11 1/2"
45	5	8	6	0.219	11 1/2"
45	5	8	6	0.250	11 1/2"

NOTES

1. Each anchor bolt for roadway installation shall have a diameter of 1", a total length of 4'-4" and a hook length of 4". Each washer shall be galvanized flat washer 1 1/16" I.D., 2 3/4" O.D., 1/2" thick.

2. Each anchor bolt for a bridge deck installation shall have a diameter of 1", a total length of 3'-8", and a hook length of 4".

INDIANA DEPARTMENT OF TRANSPORTATION

ALUMINUM LIGHT POLE
WITH TRANSFORMER BASE

SEPTEMBER 2012

STANDARD DRAWING NO. E 807-LTST-02

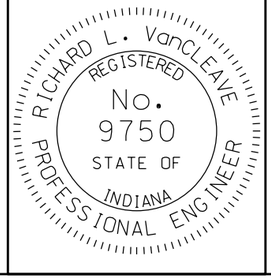

/s/ Richard L. VanCleave *09/04/12*
SUPERVISOR, ROADWAY STANDARDS DATE

/s/ Mark A. Miller *09/04/12*
CHIEF ENGINEER DATE

GENERAL NOTES

(1) If feasible, conduit to be installed on coping of bent; if not, install as shown on end of bridge not facing traffic.

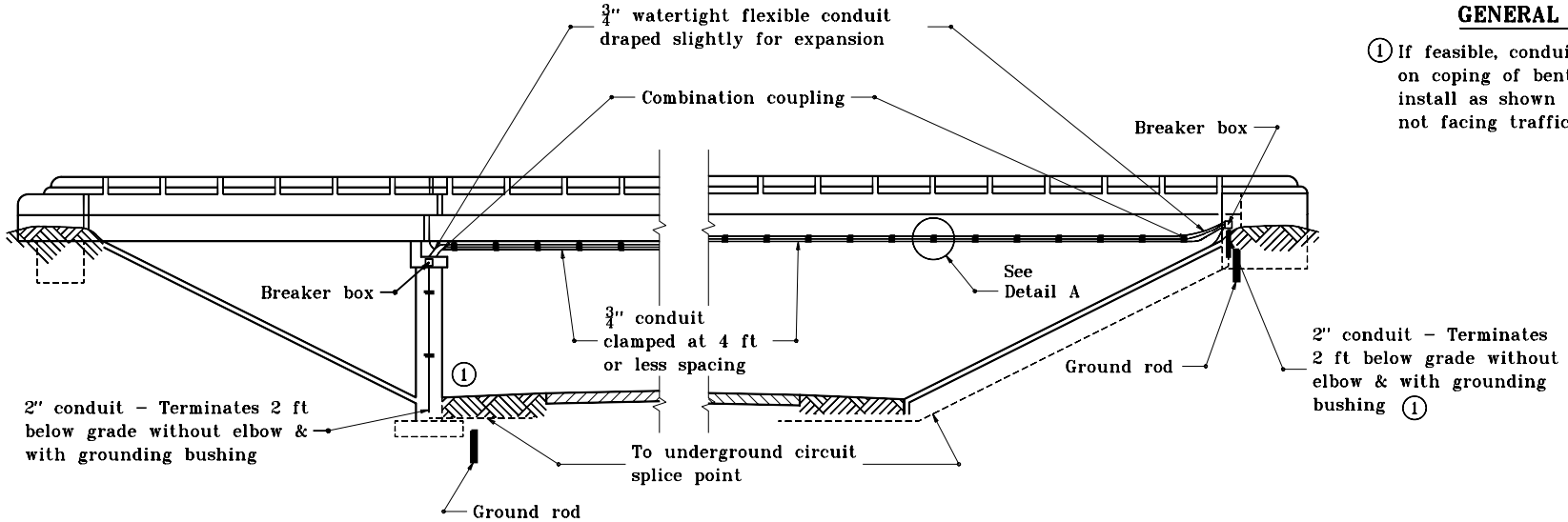

ELEVATION

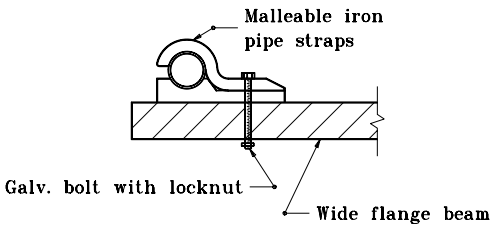

Steel Beam

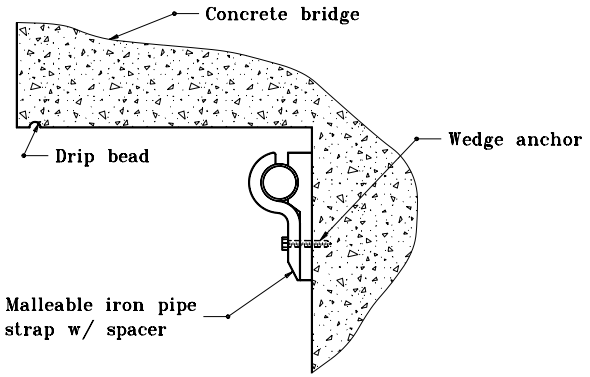

Concrete Beam

DETAIL A

INDIANA DEPARTMENT OF TRANSPORTATION

UNDERPASS LIGHTING DETAILS

MARCH 1995

STANDARD DRAWING NO. E 807-LTUP-01

ANTHONY L. UREMOVICH REGISTERED No. 18095 STATE OF INDIANA PROFESSIONAL ENGINEER

DESIGN STANDARDS ENGINEER

DETAILS PLACED IN THIS FORMAT 7-27-99

/s/ Anthony L. Uremovich 7-27-99
DESIGN STANDARDS ENGINEER DATE

/s/ Firooz Zandi 7-27-99
CHIEF HIGHWAY ENGINEER DATE

ORIGINALLY APPROVED 3-01-95

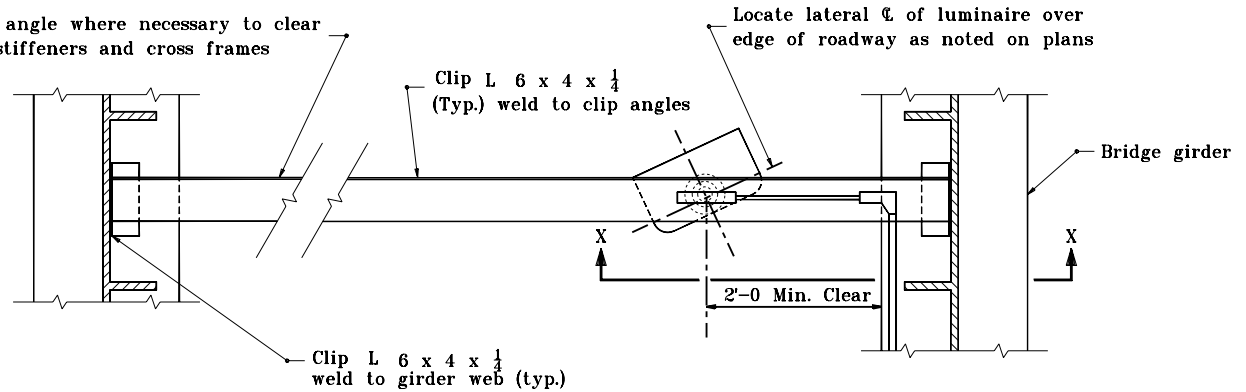

PLAN VIEW

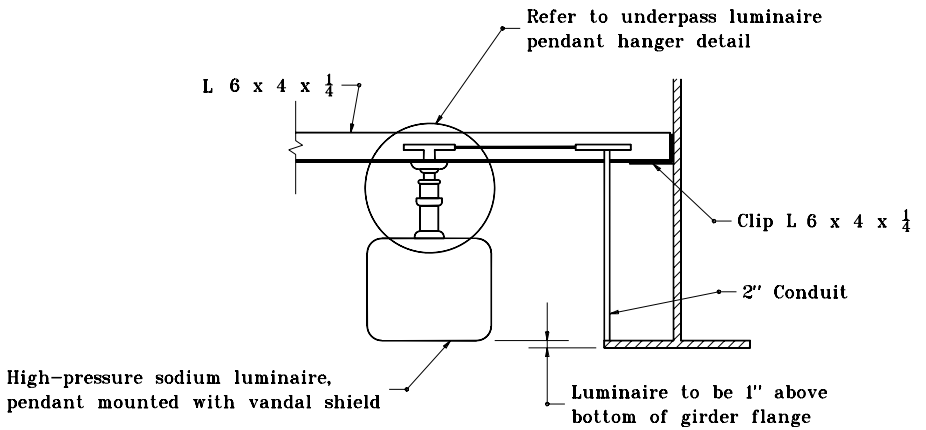

SECTION X–X

INDIANA DEPARTMENT OF TRANSPORTATION

UNDERPASS LIGHTING DETAILS PENDANT MOUNTING

JANUARY 2000

STANDARD DRAWING NO. **E 807–LTUP–02**

ANTHONY L. UREMOVICH REGISTERED No. 18095 STATE OF INDIANA PROFESSIONAL ENGINEER

DESIGN STANDARDS ENGINEER

/s/ Anthony L. Uremovich — DESIGN STANDARDS ENGINEER — 1–03–00 DATE

/s/ Firooz Zandi — CHIEF HIGHWAY ENGINEER — 1–03–00 DATE

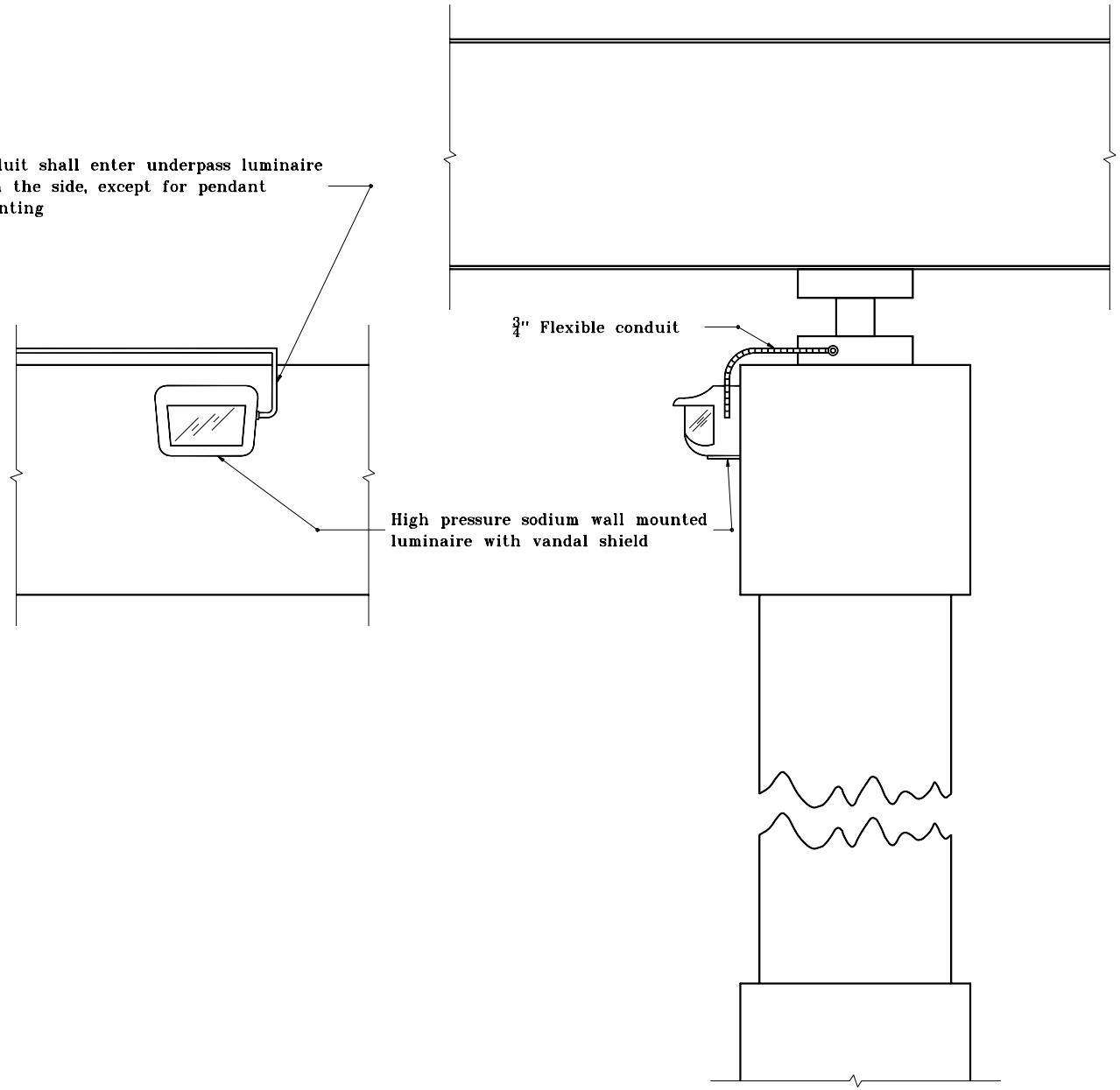

INDIANA DEPARTMENT OF TRANSPORTATION

UNDERPASS LIGHTING DETAILS WALL MOUNTING

MARCH 1995

STANDARD DRAWING NO. **E 807-LTUP-03**

ANTHONY L. UREMOVICH REGISTERED No. 18095 STATE OF INDIANA PROFESSIONAL ENGINEER

DESIGN STANDARDS ENGINEER

DETAILS PLACED IN THIS FORMAT 7-27-99

/s/ Anthony L. Uremovich 7-27-99
DESIGN STANDARDS ENGINEER — DATE

/s/ Firooz Zandi 7-27-99
CHIEF HIGHWAY ENGINEER — DATE

ORIGINALLY APPROVED 3-01-95

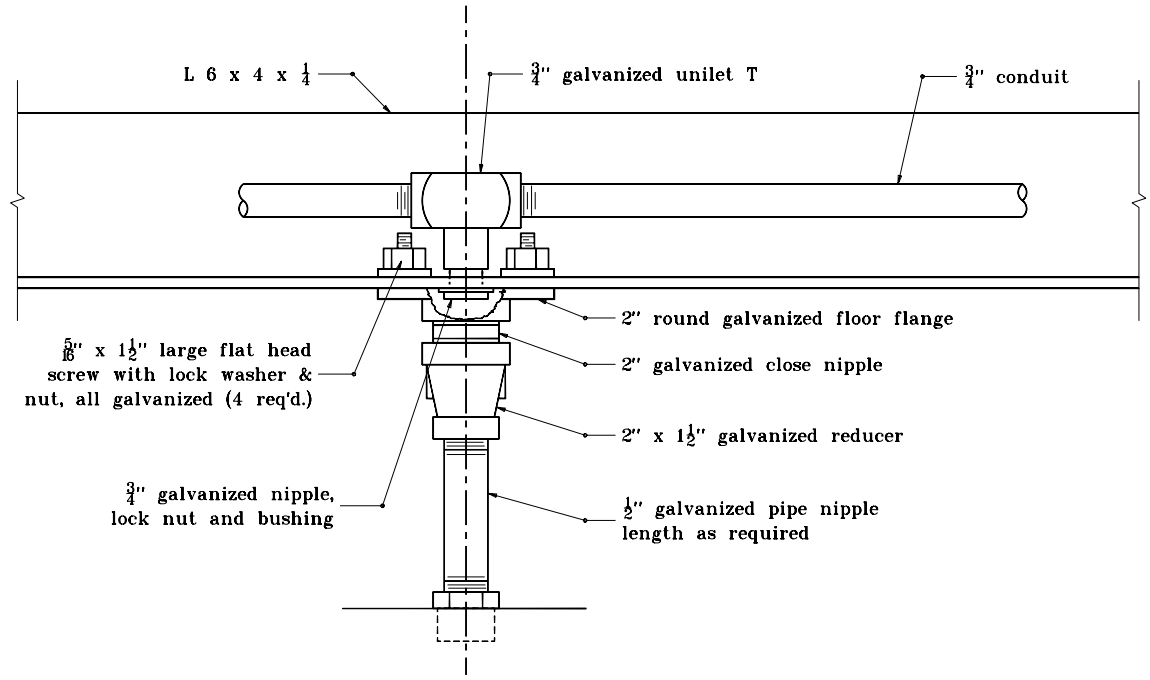

INDIANA DEPARTMENT OF TRANSPORTATION

UNDERPASS LIGHTING DETAILS
PENDANT HANGER DETAIL

JANUARY 2000

STANDARD DRAWING NO. **E 807-LTUP-04**

ANTHONY L. UREMOVICH REGISTERED No. 18095 STATE OF INDIANA PROFESSIONAL ENGINEER

DESIGN STANDARDS ENGINEER

/s/ Anthony L. Uremovich — DESIGN STANDARDS ENGINEER — 1-03-00 DATE

/s/ Firooz Zandi — CHIEF HIGHWAY ENGINEER — 1-03-00 DATE

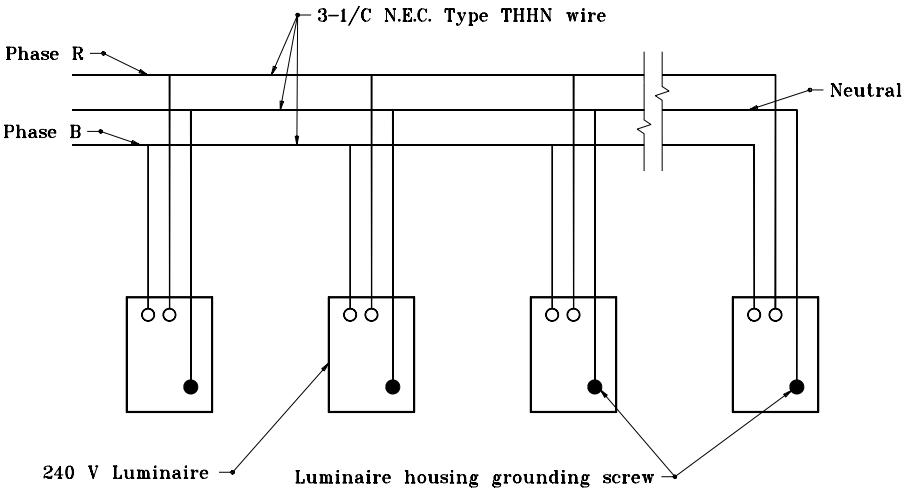

FOR CONNECTION TO 240 V PHASE TO PHASE

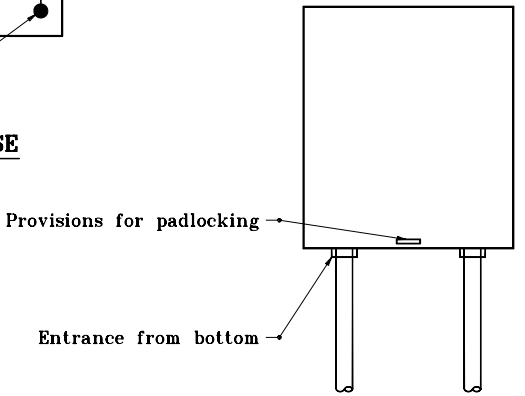

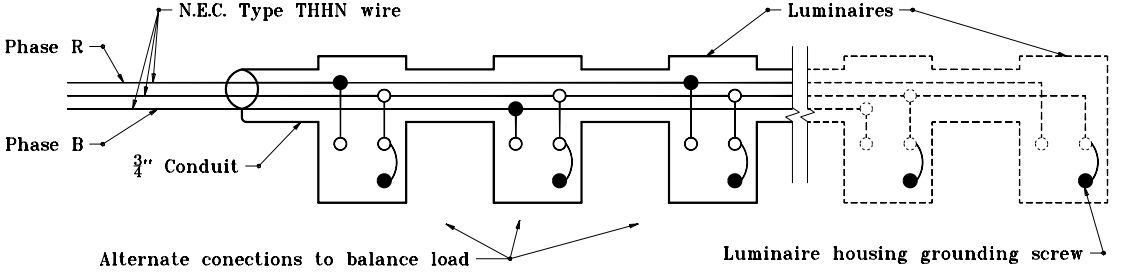

FOR CONNECTION TO 120 V OR 240 V PHASE TO NEUTRAL

INDIANA DEPARTMENT OF TRANSPORTATION

UNDERPASS LIGHTING DETAILS

LUMINAIRE WIRING DETAIL

JANUARY 2000

STANDARD DRAWING NO. **E 807-LTUP-05**

ANTHONY L. UREMOVICH REGISTERED No. 18095 STATE OF INDIANA PROFESSIONAL ENGINEER

DESIGN STANDARDS ENGINEER

/s/ Anthony L. Uremovich 1-03-00
DESIGN STANDARDS ENGINEER — DATE

/s/ Firooz Zandi 1-03-00
CHIEF HIGHWAY ENGINEER — DATE

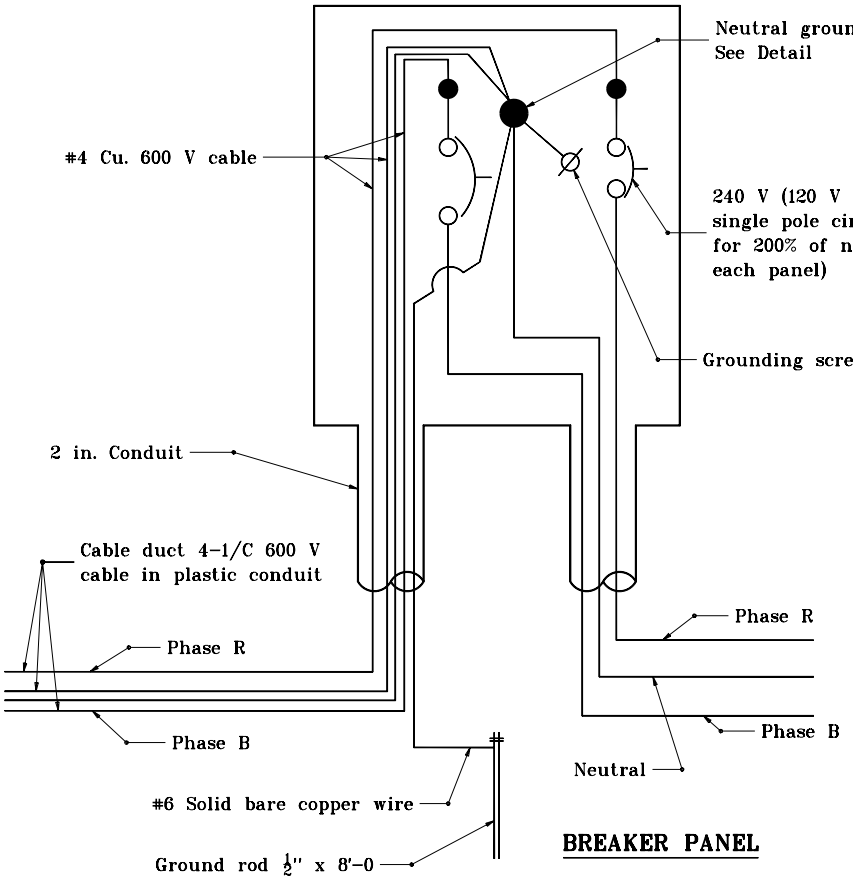

BREAKER PANEL

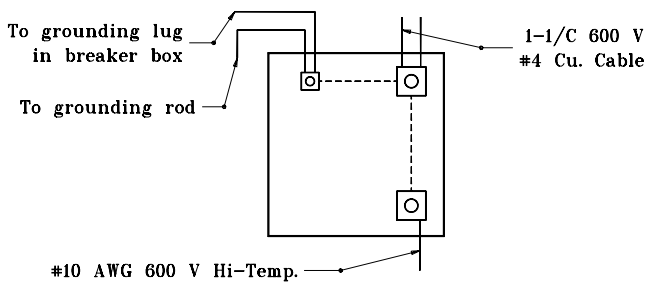

NEUTRAL GROUNDING LUG DETAIL

GENERAL NOTES

1. For all luminaire wiring from breaker panel, the last luminaire shall be #10 AWG stranded copper, 600 V.
2. Where sign illumination and underpass illumination are to be installed on the same structure, both sign and underpass luminaires may be connected to the same circuit.

INDIANA DEPARTMENT OF TRANSPORTATION

UNDERPASS LIGHTING DETAILS
CIRCUIT BREAKER WIRING DETAIL

MARCH 1995

STANDARD DRAWING NO. **E 807-LTUP-06**

ANTHONY L. UREMOVICH REGISTERED No. 18095 STATE OF INDIANA PROFESSIONAL ENGINEER

DESIGN STANDARDS ENGINEER

DETAILS PLACED IN THIS FORMAT 11-15-99

/s/ Anthony L. Uremovich 11-15-99
DESIGN STANDARDS ENGINEER DATE

/s/ Firooz Zandi 11-15-99
CHIEF HIGHWAY ENGINEER DATE

ORIGINALLY APPROVED 3-01-95

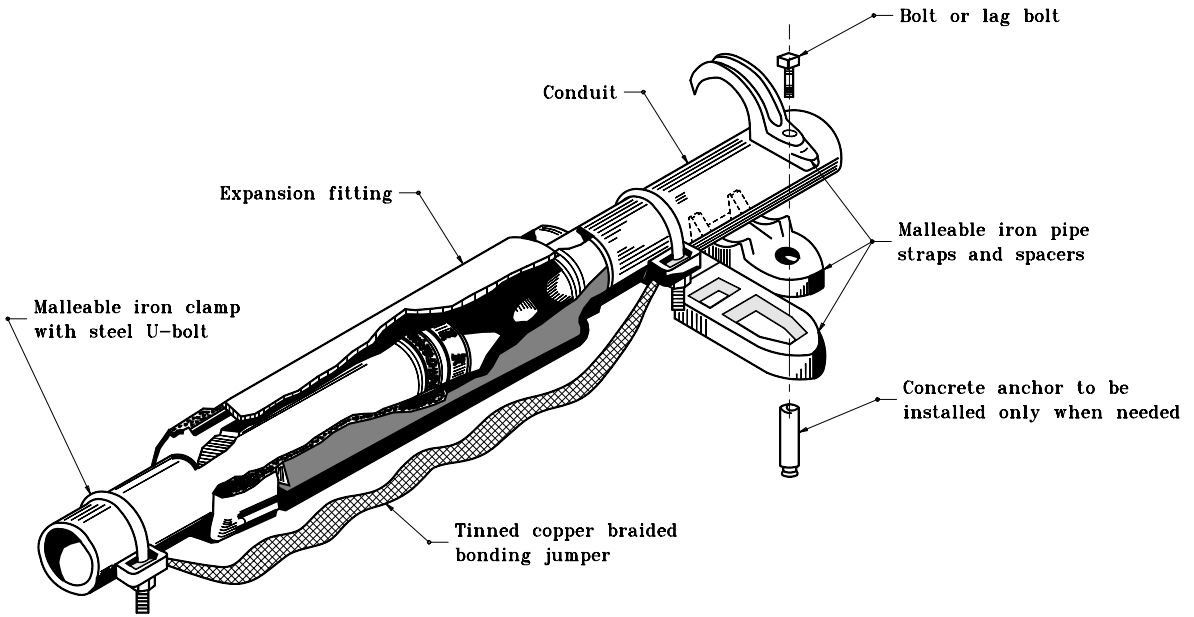

TYPICAL $\frac{3}{4}$ IN. AND 2 IN. DIAMETER EXPANSION FITTING WITH GROUNDING JUMPER

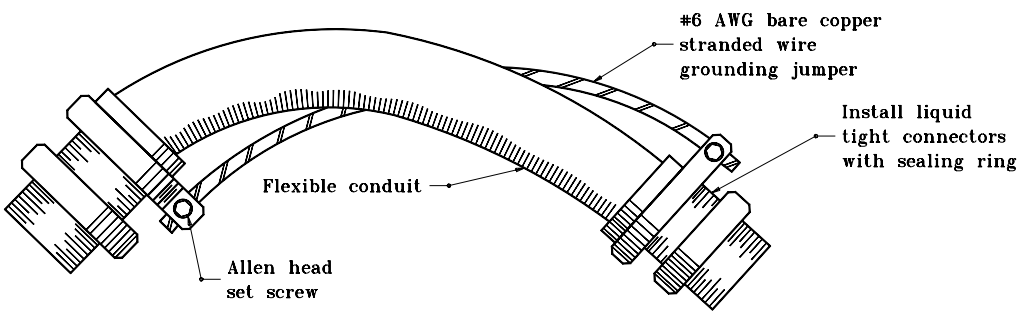

TYPICAL $\frac{3}{4}$ IN. AND 2 IN. DIAMETER FLEXIBLE CONDUIT WITH GROUNDING JUMPER

GENERAL NOTES

1. Malleable iron pipe straps to be installed immediately before and after the installed expansion fitting, to support expansion fitting and conduit.
2. Spacers shall be provided underneath the pipe strap to allow proper clearance between the bridge structure and the fitting.
3. Grounding jumper shall not be wrapped around flexible conduit, but slightly draped on one side.

INDIANA DEPARTMENT OF TRANSPORTATION

UNDERPASS LIGHTING DETAILS

MARCH 1995

STANDARD DRAWING NO. **E 807-LTUP-07**

ANTHONY L. UREMOVICH REGISTERED No. 18095 STATE OF INDIANA PROFESSIONAL ENGINEER

DESIGN STANDARDS ENGINEER

DETAILS PLACED IN THIS FORMAT	11-15-99
/s/ Anthony L. Uremovich	11-15-99
DESIGN STANDARDS ENGINEER	DATE
/s/ Firooz Zandi	11-15-99
CHIEF HIGHWAY ENGINEER	DATE
ORIGINALLY APPROVED	3-01-95

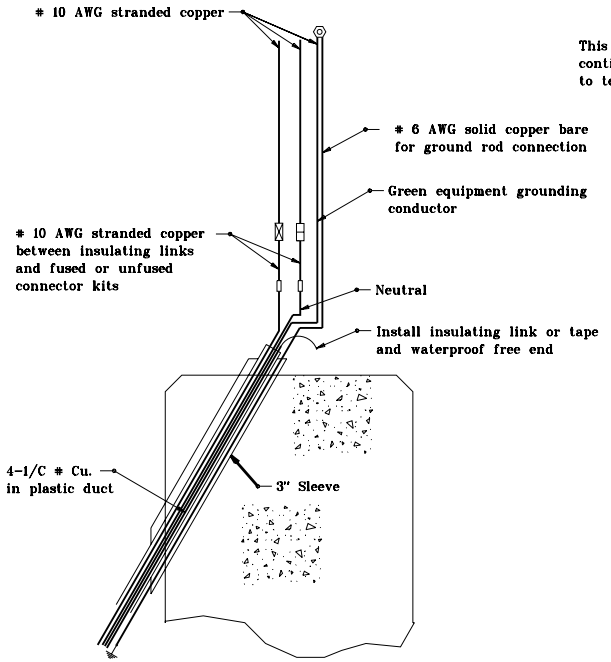

TYPE 1

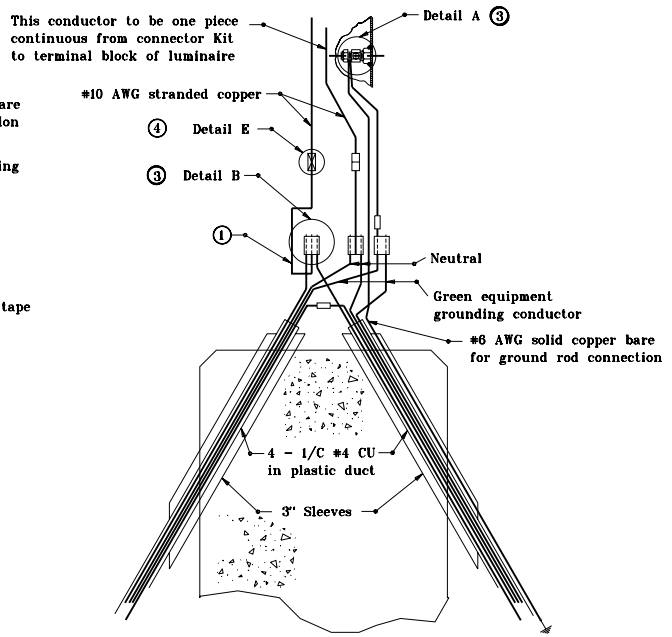

TYPE 2

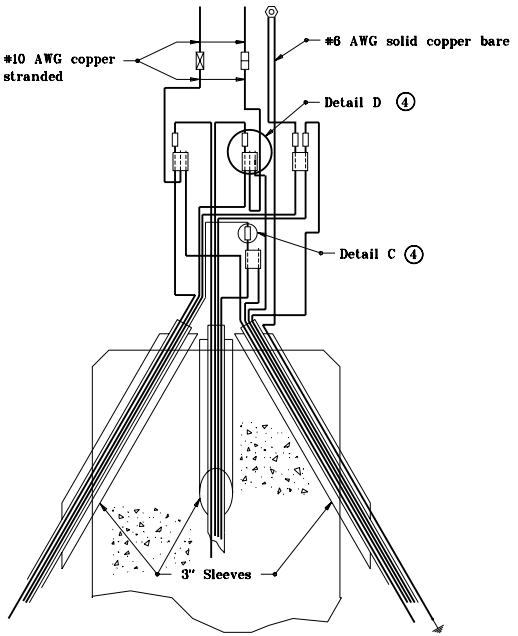

TYPE 3

CONNECTION TYPES

NOTES

(1) Allow sufficient conductor slack to permit the withdrawal of outside of pole handhole.

2. Use of inhibiting compound is mandatory for all connections.

(3) See Standard Drawing E 807-LTWR-02 for details.

(4) See Standard Drawing E 807-LTWR-03 for details.

LEGEND

- Grounding post
- Self insulated splicer (insulating link)
- Unfused connector
- Fused connector
- Compression connector

INDIANA DEPARTMENT OF TRANSPORTATION

LIGHTING WIRING DETAILS

JANUARY 1996

STANDARD DRAWING NO. E 807-LTWR-01

ANTHONY L. UREMOVICH REGISTERED No. 18095 STATE OF INDIANA PROFESSIONAL ENGINEER

DESIGN STANDARDS ENGINEER

DETAILS PLACED IN THIS FORMAT 11-15-99

/s/ Anthony L. Uremovich 11-15-99
DESIGN STANDARDS ENGINEER DATE

/s/ Firooz Zandi 11-15-99
CHIEF HIGHWAY ENGINEER DATE

ORIGINALLY APPROVED 1-02-96

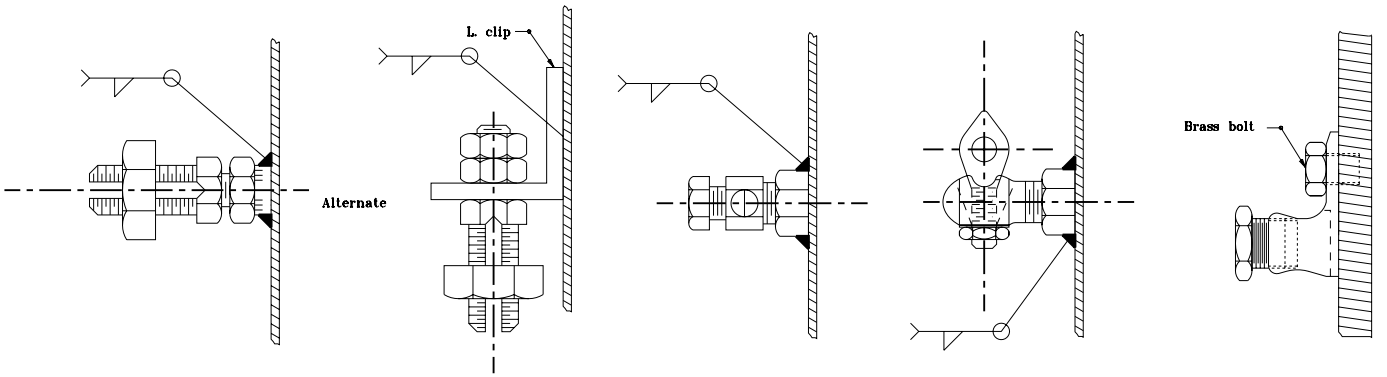

DETAIL A
ALTERNATIVE GROUNDING POSTS

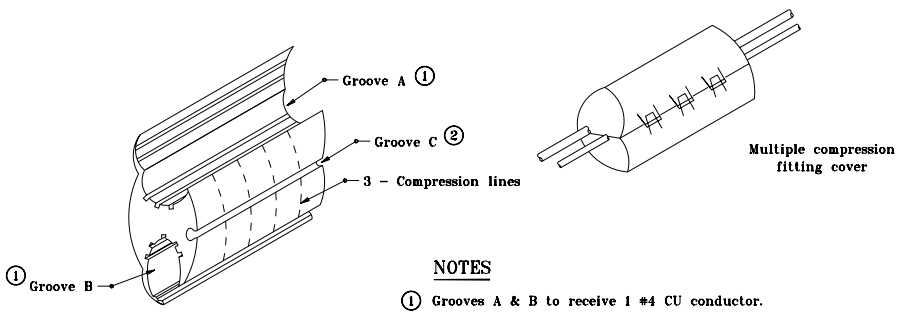

NOTES

① Grooves A & B to receive 1 #4 CU conductor.

② Groove C to receive 1 #10 CU conductor.

DETAIL B
MULTIPLE COMPRESSION FITTING

LEGEND

- Grounding post
- Self insulated splicer (insulating link)
- Unfused connector
- Fused connector
- Compression connector

INDIANA DEPARTMENT OF TRANSPORTATION

LIGHTING WIRING DETAILS

JANUARY 1996

STANDARD DRAWING NO. **E 807-LTWR-02**

ANTHONY L. UREMOVICH REGISTERED No. 18095 STATE OF INDIANA PROFESSIONAL ENGINEER

DESIGN STANDARDS ENGINEER

DETAILS PLACED IN THIS FORMAT	11-15-99
/s/ Anthony L. Uremovich	11-15-99
DESIGN STANDARDS ENGINEER	DATE
/s/ Firooz Zandi	11-15-99
CHIEF HIGHWAY ENGINEER	DATE
ORIGINALLY APPROVED	1-02-96

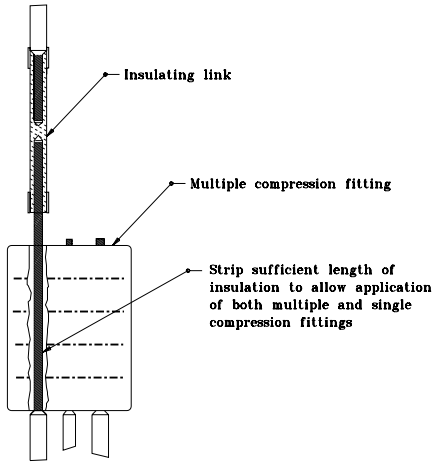

DETAIL D

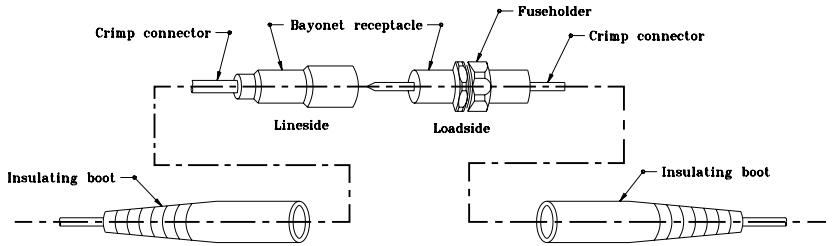

DETAIL E
BAYONET DISCONNECT CONNECTOR KIT

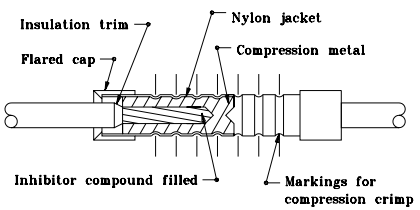

DETAIL C
INSULATING LINK

LEGEND

- Grounding post
- Self insulated splicer (insulating link)
- Unfused connector
- Fused connector
- Compression connector

INDIANA DEPARTMENT OF TRANSPORTATION

LIGHTING WIRING DETAILS

JANUARY 1996

STANDARD DRAWING NO. **E 807-LTWR-03**

ANTHONY L. UREMOVICH REGISTERED No. 18095 STATE OF INDIANA PROFESSIONAL ENGINEER

DESIGN STANDARDS ENGINEER

DETAILS PLACED IN THIS FORMAT	11-15-99
/s/ Anthony L. Uremovich DESIGN STANDARDS ENGINEER	11-15-99 DATE
/s/ Firooz Zandi CHIEF HIGHWAY ENGINEER	11-15-99 DATE
ORIGINALLY APPROVED	1-02-96

LEGEND

- Ground post
- Self insulated splicer (insulating link)
- Unfused connector
- Fused connecto
- Compression connector

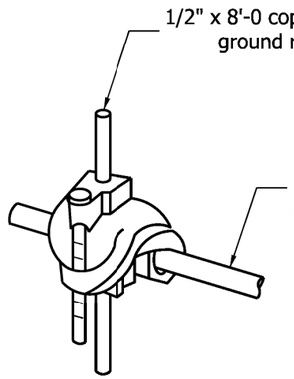

Grounding grid connector

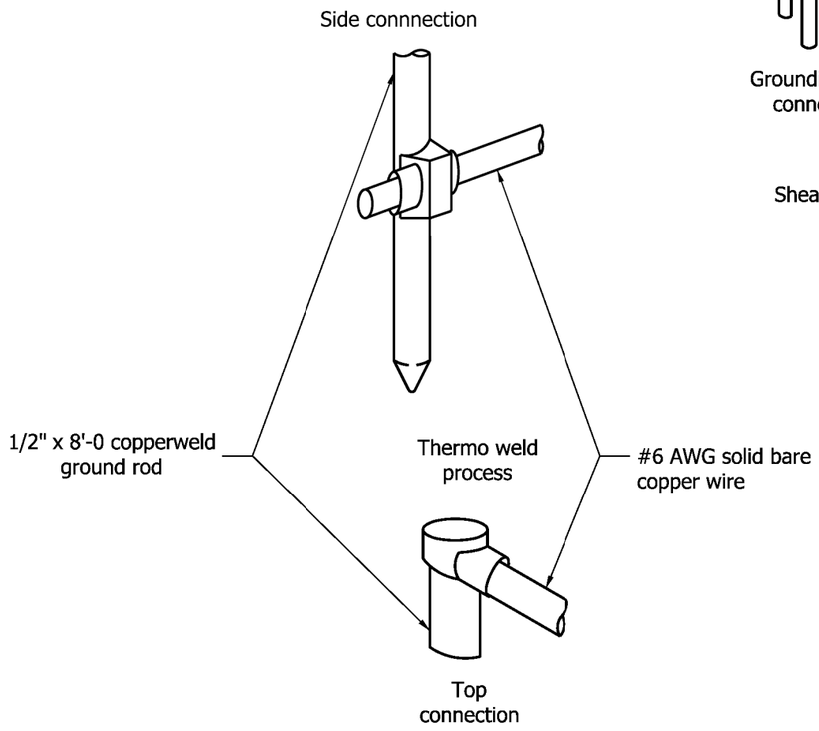

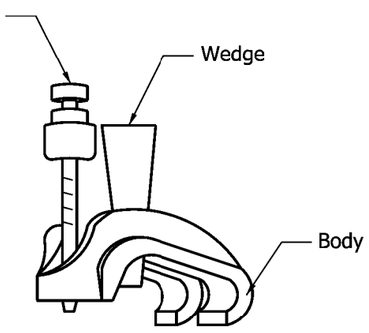



DETAIL F
TYPICAL GROUND ROD CONNECTION

INDIANA DEPARTMENT OF TRANSPORTATION

LIGHTING WIRING DETAILS

SEPTEMBER 2009

STANDARD DRAWING NO. E 807-LTWR-04

RICHARD L. VanCLEAVE REGISTERED No. 9750 STATE OF INDIANA PROFESSIONAL ENGINEER

DESIGN STANDARDS ENGINEER

/s/ Richard L. VanCleave 09/01/09
DESIGN STANDARDS ENGINEER DATE

/s/ Mark A. Miller 09/01/09
CHIEF HIGHWAY ENGINEER DATE

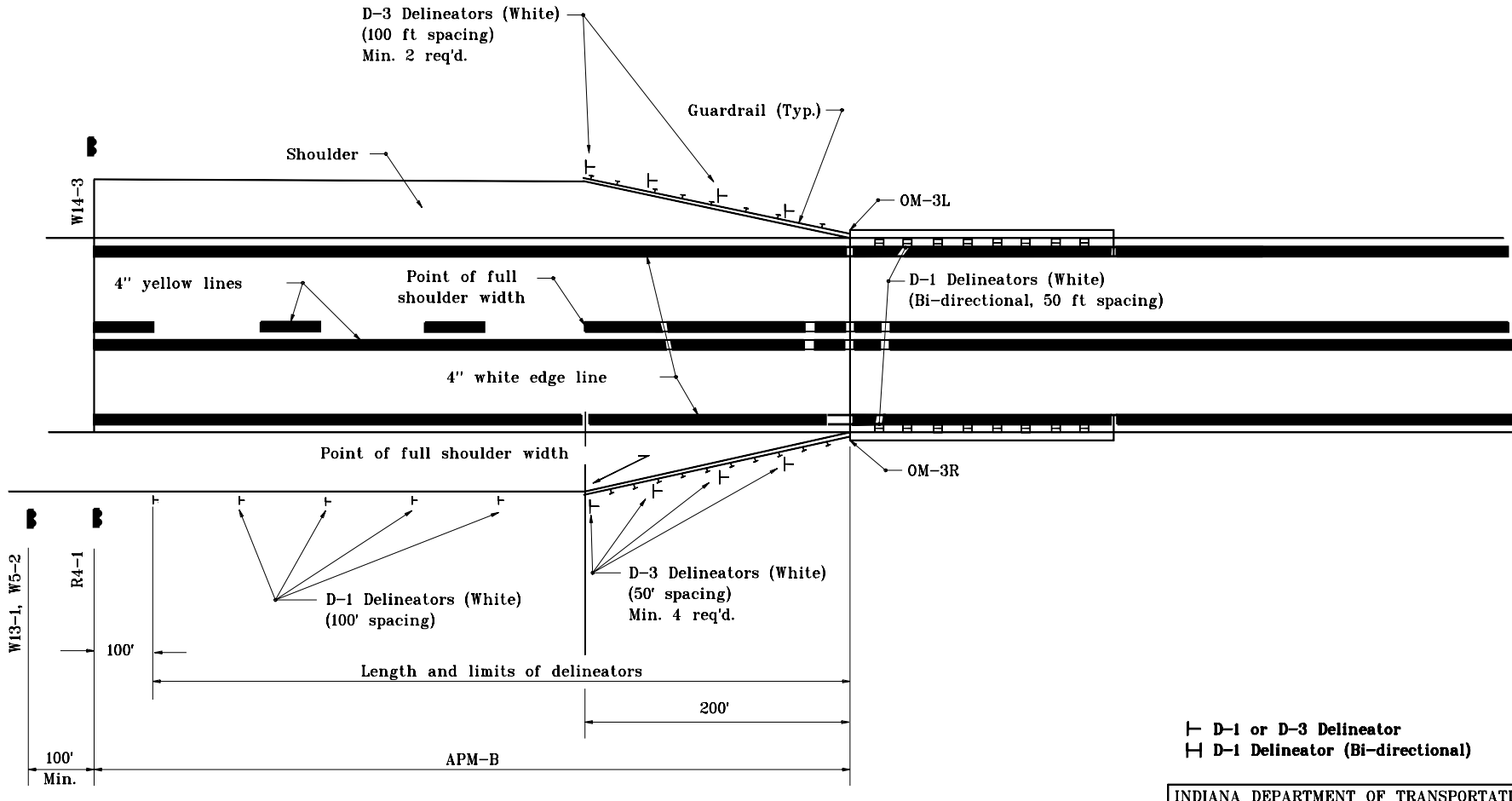

⊢ **D–1 or D–3 Delineator**
⊢⊣ **D–1 Delineator (Bi–directional)**

Aborted Pass Maneuver Distance

85th Percentile Speed (mph)	Distance (APM–B)
30	350 ft
35	400 ft
40	450 ft
45	500 ft
50	550 ft
55	600 ft
60	650 ft

GENERAL NOTES

1. The minimum length of the no passing zone at narrow bridges if marked, shall be the distance APM–B. If the 85th percentile speed is not known add 5 mph to the posted limit and use the appropriate distance APM–B.

INDIANA DEPARTMENT OF TRANSPORTATION
TRAFFIC CONTROL DEVICES
AT NARROW BRIDGE ON TWO LANE ROAD
JANUARY 2000

STANDARD DRAWING NO. **E 808–MKNB–01**

ANTHONY L. UREMOVICH REGISTERED No. 18095 STATE OF INDIANA PROFESSIONAL ENGINEER
DESIGN STANDARDS ENGINEER

/s/ Anthony L. Uremovich 1–03–00
DESIGN STANDARDS ENGINEER — DATE

/s/ Firooz Zandi 1–03–00
CHIEF HIGHWAY ENGINEER — DATE

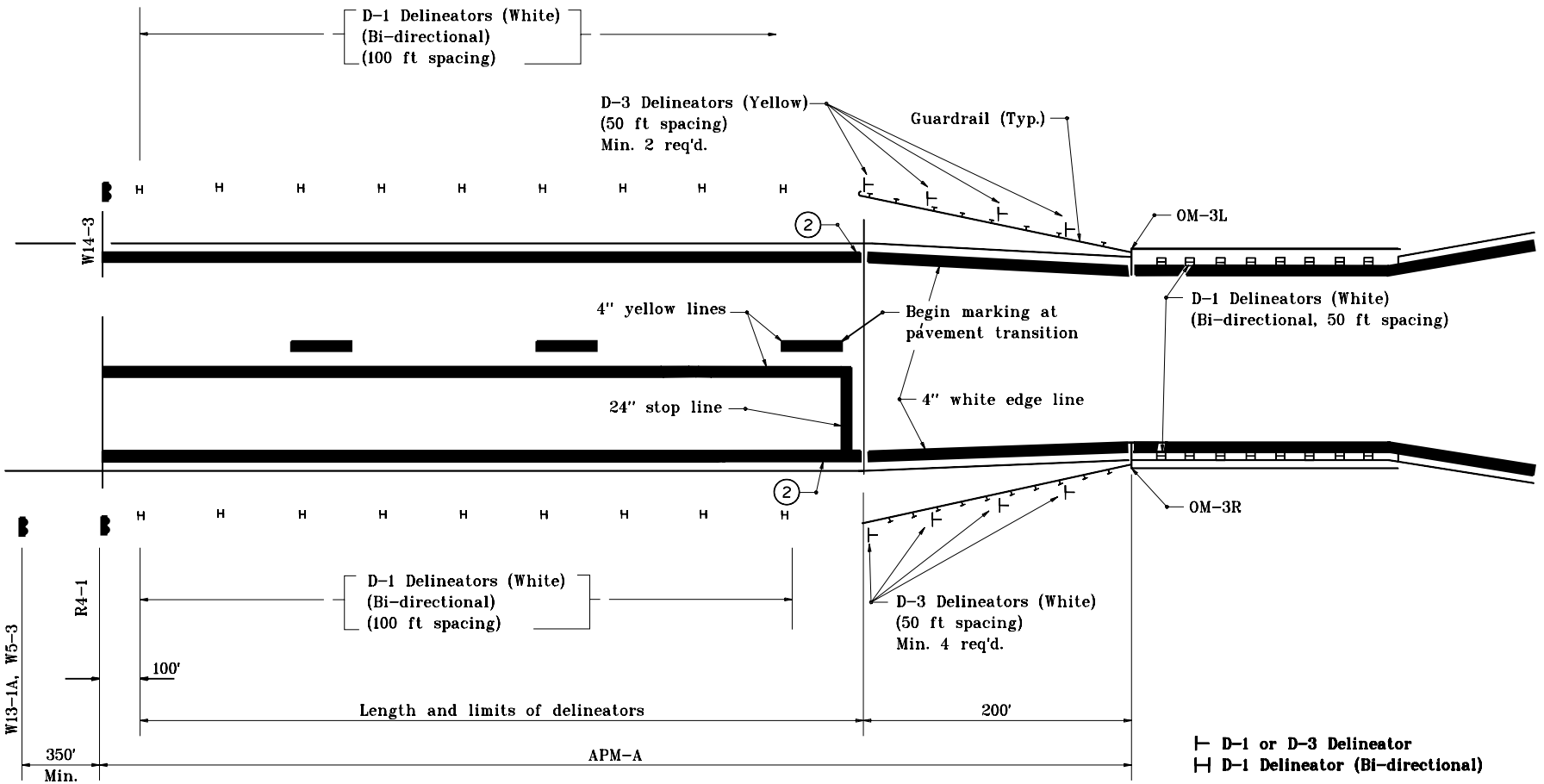

Aborted Pass Maneuver Distance

85th Percentile Speed (mph)	Distance (APM-A)
30	400 ft
35	500 ft
40	600 ft
45	700 ft
50	800 ft
55	900 ft
60	1000 ft

GENERAL NOTES

1. The minimum length of the no passing zone at one lane bridges if marked, shall be the distance APM-A. If the 85th percentile speed is known add 5 mph to the posted limit and use the appropriate distance APM-A.

(2) When pavement width does not provide adequate width for normal edge line installation, the edge lines shall be installed only on the tapers and through the narrow obstruction.

INDIANA DEPARTMENT OF TRANSPORTATION

TRAFFIC CONTROL DEVICES
AT ONE LANE BRIDGE ON TWO LANE ROAD

JANUARY 2000

STANDARD DRAWING NO. **E 808-MKNB-02**

ANTHONY L. UREMOVICH REGISTERED No. 18095 STATE OF INDIANA PROFESSIONAL ENGINEER

DESIGN STANDARDS ENGINEER

/s/ Anthony L. Uremovich 1-03-00
DESIGN STANDARDS ENGINEER — DATE

/s/ Firooz Zandi 1-03-00
CHIEF HIGHWAY ENGINEER — DATE

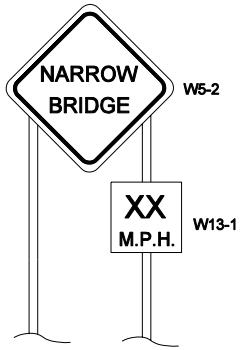

SIGNAGE REQUIRED AT NARROW BRIDGE
ON TWO LANE ROADWAY

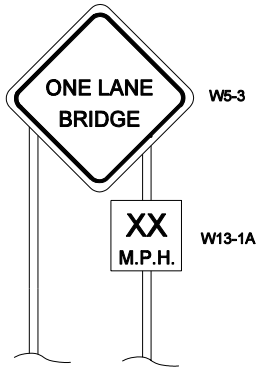

SIGNAGE REQUIRED AT ONE LANE BRIDGE
ON TWO LANE ROADWAY



D-1 delineator post with one 3" dia. white delineator

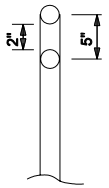

D-2 delineator post with two 3" dia. white delineators

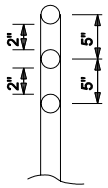

D-3 delineator post with three 3" dia. white delineators

NOTES

① Delineators:
OM-3L: 3 amber buttons on 5" centers
OM-3R: 3 white buttons on 5" centers

② Diagonal stripes similar in design to the Type 3 object marker, that have been applied by the manufacturer of approved impact attenuators or guardrail end treatments will be permitted in lieu of the object markers shown hereon.

DELINEATORS WITH POSTS

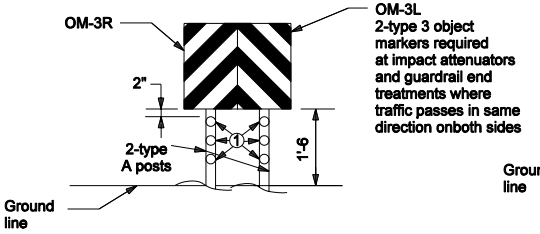

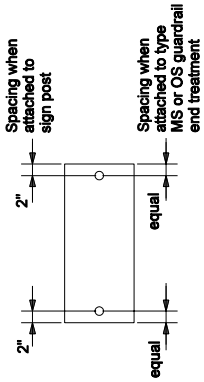

BOLT SPACING

TYPE 3 OBJECT MARKERS
PLACEMENT AT GUARDRAIL END TREATMENTS
AND IMPACT ATTENUATORS ②

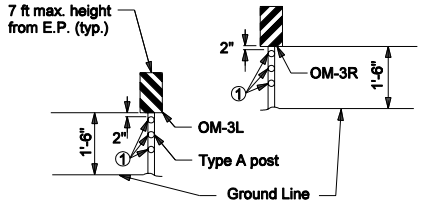

Type 3 object marker (R or L) shall be installed in line with the inner edge of the obstruction.

TYPE 3 OBJECT MARKER
PLACEMENT AT ONE-LANE OR NARROW
BRIDGE ON TWO LANE ROADWAY

INDIANA DEPARTMENT OF TRANSPORTATION

PLACEMENT OF TRAFFIC CONTROL DEVICES

MARCH 2005

STANDARD DRAWING NO. E 808-MKNB-03

RICHARD L. VanCLEAVE REGISTERED No. 9750 STATE OF INDIANA PROFESSIONAL ENGINEER

DESIGN STANDARDS ENGINEER

/s/ Richard L. VanCleave 3-01-05
DESIGN STANDARDS ENGINEER DATE

/s/ Richard K. Smutzer 3-01-05
CHIEF HIGHWAY ENGINEER DATE

GENERAL NOTES

1. No-passing zone signs are required if ADT is greater than 750 or posted speed limit is 50 mph or greater.

2. Signs of larger sizes than implied by sign designations may be used if desired.

3. A bridge or culvert, with a clear roadway of 18 ft to 22 ft inclusive, with a clear roadway of less than that of the approach pavement, or where the handrail or curb is less than 2 ft from the edge of pavement will be considered a narrow bridge. The W5-2 sign shall be installed for this condition.

4. A bridge or culvert with less than 18 ft between opposite vertical surfaces will be considered a one lane bridge. The W5-3 sign shall be installed for this condition.

5. D-3 delineators will be required if ADT is greater than 500 at a narrow bridge. D-3 delineatiors will be required if ADT is greater than 250 at a one lane bridge.

6. The minimum length of the no-passing zone at a narrow bridge shall be the distance APM - B. If the 85th percentile speed is not known, add 5 mph to the posted speed limit and use the appropriate distance APM - B.

7. The minimum length of the no-passing zone at a one lane bridge shall be the distance APM - A. If the 85th percentile speed is not known, add 5 mph to the posted speed limit and use the appropriate distance APM - A.

8. Where guardrail is installed, delineators shall be installed at the back side of the guardrail. Where the guardrail run ends and additional delineators are required, they shall be installed a minimum of 2 ft from the edge of the shoulder.

9. Type 3 object markers may not be required at all four corners of a culvert. Two type 3 object markers shall be installed back-to-back on a single post at the incoming side of the culvert. If delineators may be placed such that there is a 25 ft diagonal distance between the delineators on the opposite side of the roadway, D-3 delineator spacing may be increased to 100 ft.

INDIANA DEPARTMENT OF TRANSPORTATION

PLACEMENT OF TRAFFIC CONTROL DEVICES

JANUARY 2000

STANDARD DRAWING NO **E 808-MKNB-04**

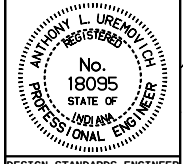

DESIGN STANDARDS ENGINEER

/s/ Anthony L. Uremovich 1-03-00
DESIGN STANDARDS ENGINEER — DATE

/s/ Firooz Zandi 1-03-00
CHIEF HIGHWAY ENGINEER — DATE

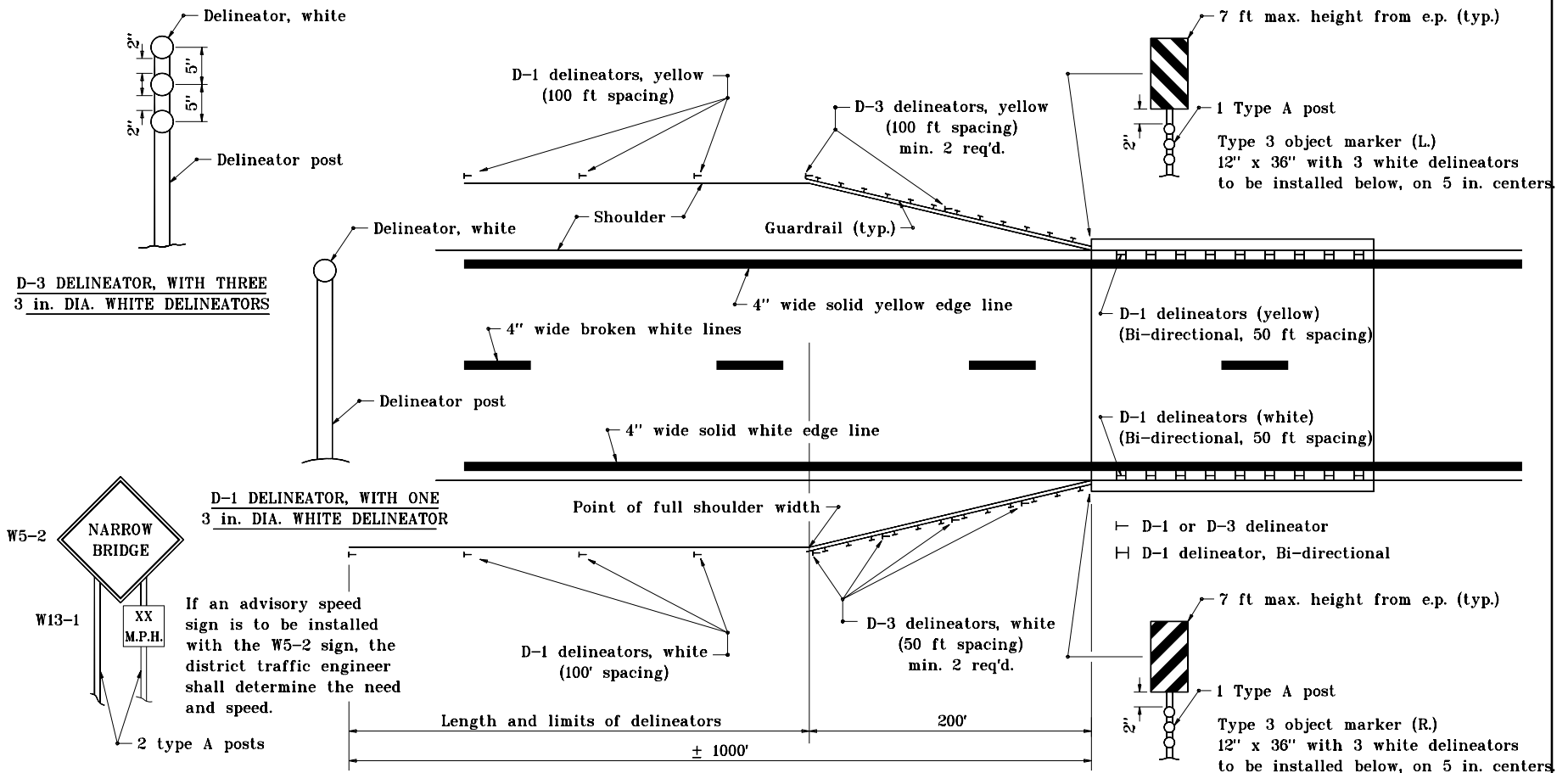

GENERAL NOTES

1. No-passing zone pavement markings shall not be placed on dual lane divided or 4 lane undivided highways.

2. A bridge which is not a narrow bridge but which does not have full approach shoulder width carried across the bridge, shall have D-1 delineators on the approach. The W-5 sign and type 3 object markers shall not be installed.

3. See Standard Drawing E 808-MKNB-04 for additional general notes.

4. See Standard Drawing E 808-MKNB-03 for traffic control devices.

5. The inside edge of the type 3 object marker shall be in line with the inner edge of the obstruction.

INDIANA DEPARTMENT OF TRANSPORTATION

TRAFFIC CONTROL DEVICES
NARROW BRIDGE DIVIDED HIGHWAY

MAY 1998

STANDARD DRAWING NO. **E 808-MKNB-05**

ANTHONY L. UREMOVICH REGISTERED No. 18095 STATE OF INDIANA PROFESSIONAL ENGINEER

DESIGN STANDARDS ENGINEER

DETAILS PLACED IN THIS FORMAT	11-15-99
/s/ Anthony L. Uremovich	11-15-99
DESIGN STANDARDS ENGINEER	DATE
/s/ Firooz Zandi	11-15-99
CHIEF HIGHWAY ENGINEER	DATE
ORIGINALLY APPROVED	5-01-98

GENERAL NOTES

1. The tip of the lane indication arrow closest to the stop line shall be 20 ft in advance of the nearest edge of the stop line.

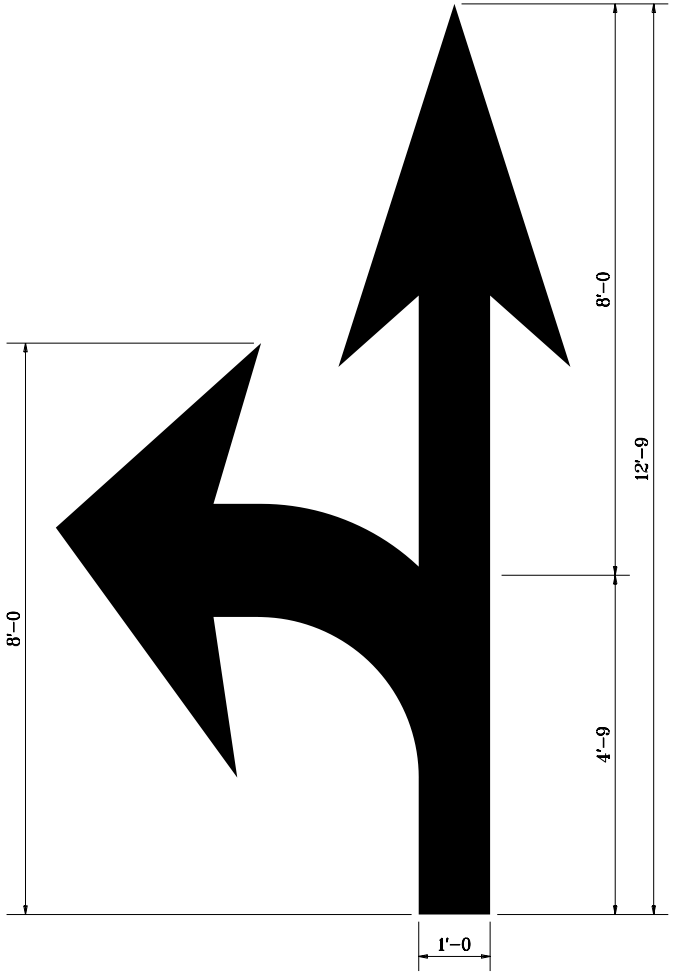

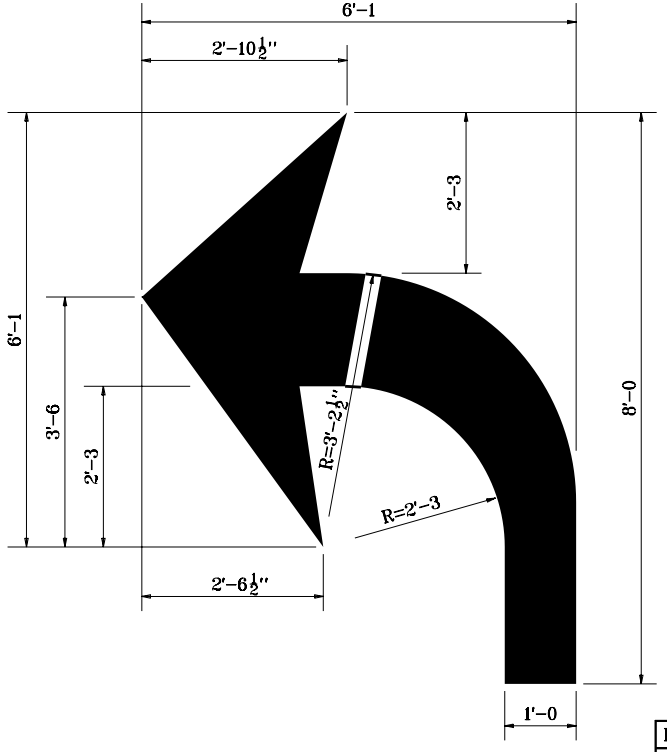

INDIANA DEPARTMENT OF TRANSPORTATION

TRANSVERSE MARKINGS

MARCH 1995

STANDARD DRAWING NO **E 808–MKPM–02**

ANTHONY L. UREMOVICH REGISTERED No. 18095 STATE OF INDIANA PROFESSIONAL ENGINEER

DESIGN STANDARDS ENGINEER

DETAILS PLACED IN THIS FORMAT	7-27-99
/s/ Anthony L. Uremovich, DESIGN STANDARDS ENGINEER	7-27-99
/s/ Firooz Zandi, CHIEF HIGHWAY ENGINEER	7-27-99
ORIGINALLY APPROVED	3-01-95

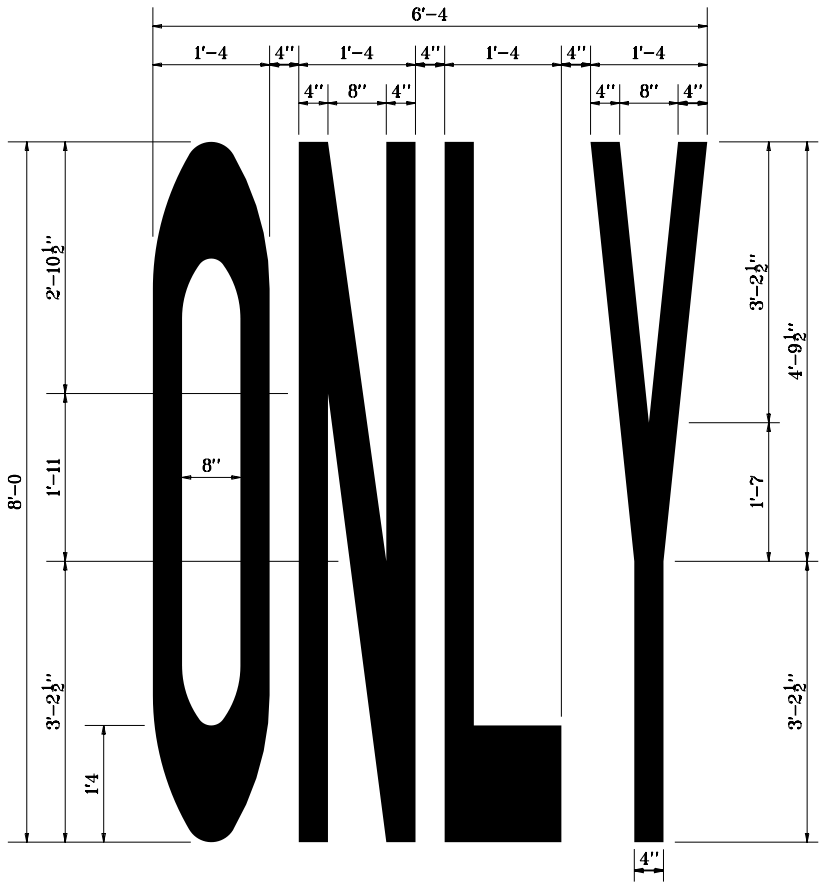

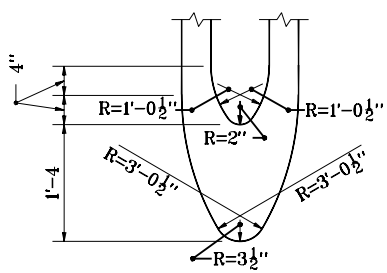

DETAILS FOR "O"

GENERAL NOTES

1. The top edge of the word ONLY shall be located in advance of the back edge of the lane indication arrow, at least 4 times the height of the characters for posted speeds ≤ 45 mph but not more than 10 times the height of the characters for posted speeds > 45 mph.
2. Horizontal strokes are 1'-4 wide. Vertical strokes are 4" wide.

INDIANA DEPARTMENT OF TRANSPORTATION

TRANSVERSE MARKINGS

JANUARY 2000

STANDARD DRAWING NO **E 808-MKPM-03**

ANTHONY L. UREMOVICH REGISTERED No. 18095 STATE OF INDIANA PROFESSIONAL ENGINEER

DESIGN STANDARDS ENGINEER

/s/ Anthony L. Uremovich 1-03-00
DESIGN STANDARDS ENGINEER — DATE

/s/ Firooz Zandi 1-03-00
CHIEF HIGHWAY ENGINEER — DATE

GENERAL NOTES

1. Horizontal strokes are 1'-4 wide.
   Vertical strokes are 4" wide.

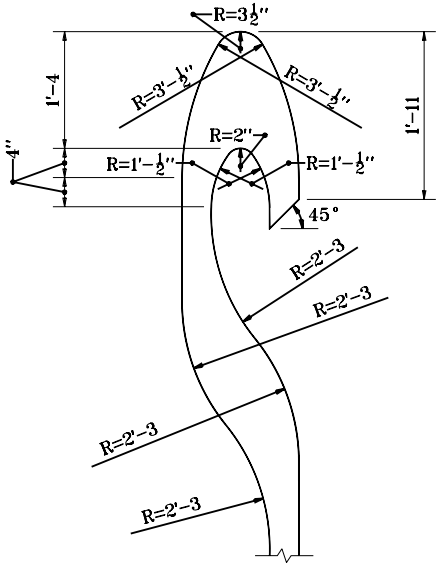

DETAILS FOR "C,G,S"

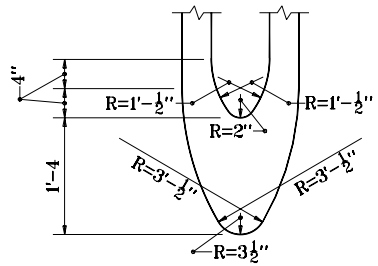

DETAILS FOR "O"

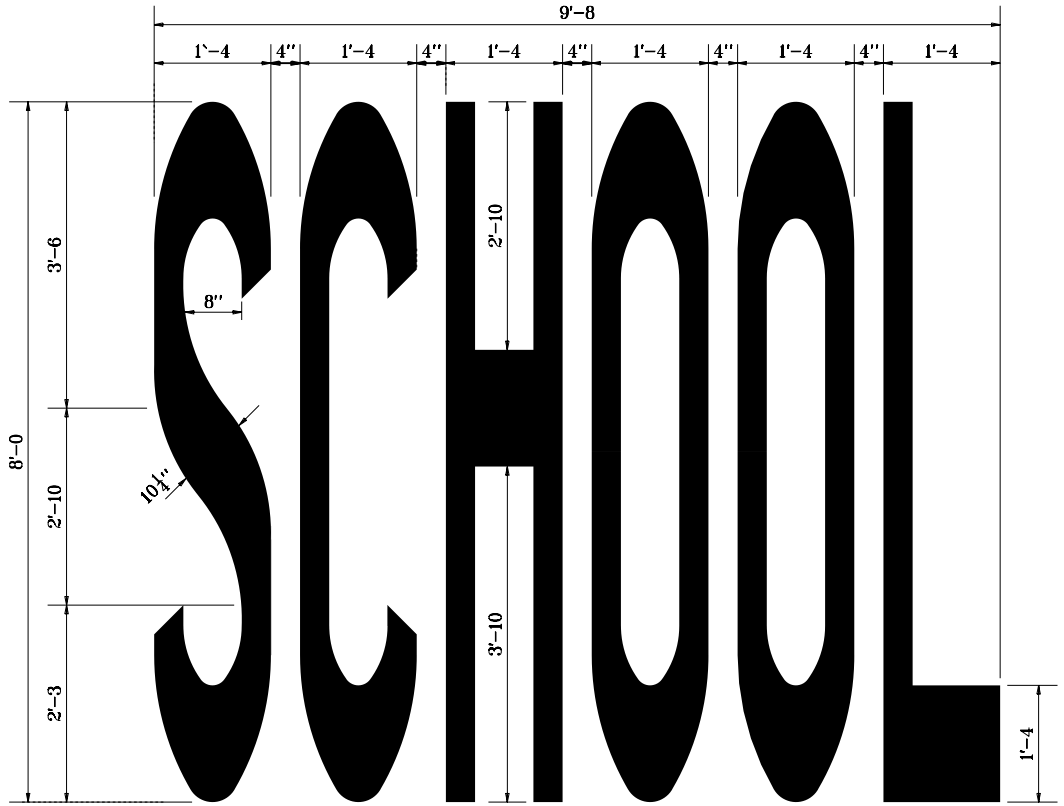

INDIANA DEPARTMENT OF TRANSPORTATION

TRANSVERSE MARKINGS

MARCH 1995

STANDARD DRAWING NO E 808-MKPM-04

ANTHONY L. UREMOVICH REGISTERED No. 18095 STATE OF INDIANA PROFESSIONAL ENGINEER

DESIGN STANDARDS ENGINEER

DETAILS PLACED IN THIS FORMAT 7-27-99

/s/ Anthony L. Uremovich 7-27-99
DESIGN STANDARDS ENGINEER DATE

/s/ Firooz Zandi 7-27-99
CHIEF HIGHWAY ENGINEER DATE

ORIGINALLY APPROVED 3-01-95

GENERAL NOTES

1. Horizontal strokes are 1'–4 wide. vertical strokes are 4" wide.

2. See Standard Drawing E 807–MKPM–04 for Details for "G".

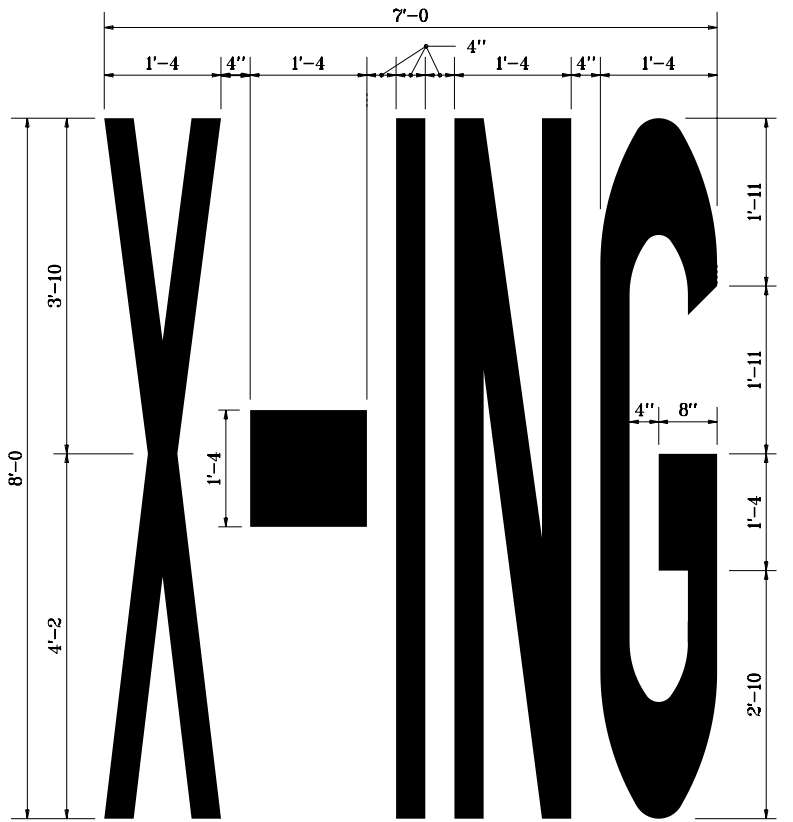

INDIANA DEPARTMENT OF TRANSPORTATION

TRANSVERSE MARKINGS

JANUARY 2000

STANDARD DRAWING NO. **E 808–MKPM–05**

ANTHONY L. UREMOVICH REGISTERED No. 18095 STATE OF INDIANA PROFESSIONAL ENGINEER

DESIGN STANDARDS ENGINEER

/s/ Anthony L. Uremovich 1–03–00
DESIGN STANDARDS ENGINEER — DATE

/s/ Firooz Zandi 1–03–00
CHIEF HIGHWAY ENGINEER — DATE

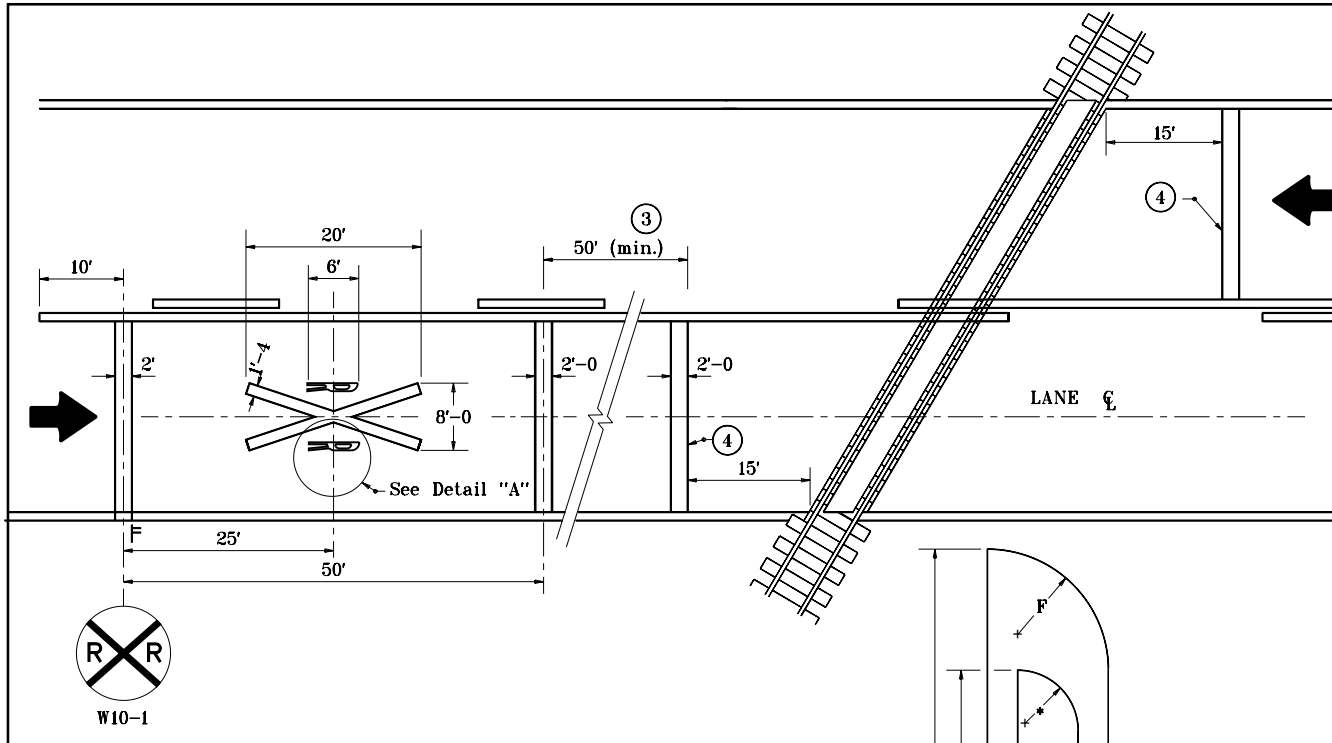

STOPPING SIGHT DISTANCE (3)

DESIGN SPEED (mph)	Distance, ft
30	200
35	275
40	325
45	400
50	475
55	575
60	650

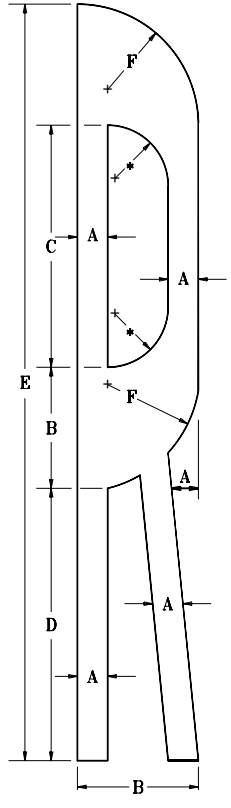

A = $2\frac{3}{4}$"
B = $11\frac{1}{2}$"
C = 1'-11
D = 2'-1
E = 6'-0
F = $11\frac{1}{2}$"
* = $5\frac{3}{4}$" R

DETAIL "A"

GENERAL NOTES

1. For 2-way left-turn lanes, the center lane shall be discontinued across the railroad crossing and marked as a flush median or as a 1-way left-turn lane.
2. For a multi-lane highway, the tranverse lines shall be extended across all approach lanes, and the individual railroad crossing symbols provided in each lane.

(3) Stopping sight distance in rural areas; variable in urban areas, but not less than 50 ft. See Stopping Sight Distance Table.

(4) Stop line is approximately 8 ft from gate (if present).

INDIANA DEPARTMENT OF TRANSPORTATION

PAVEMENT MARKING FOR RAILROAD CROSSINGS

JANUARY 2000

STANDARD DRAWING NO. E 808-MKPM-07

ANTHONY L. UREMOVICH REGISTERED No. 18095 STATE OF INDIANA PROFESSIONAL ENGINEER

DESIGN STANDARDS ENGINEER

/s/ Anthony L. Uremovich 1-03-00
DESIGN STANDARDS ENGINEER — DATE

/s/ Firooz Zandi 1-03-00
CHIEF HIGHWAY ENGINEER — DATE

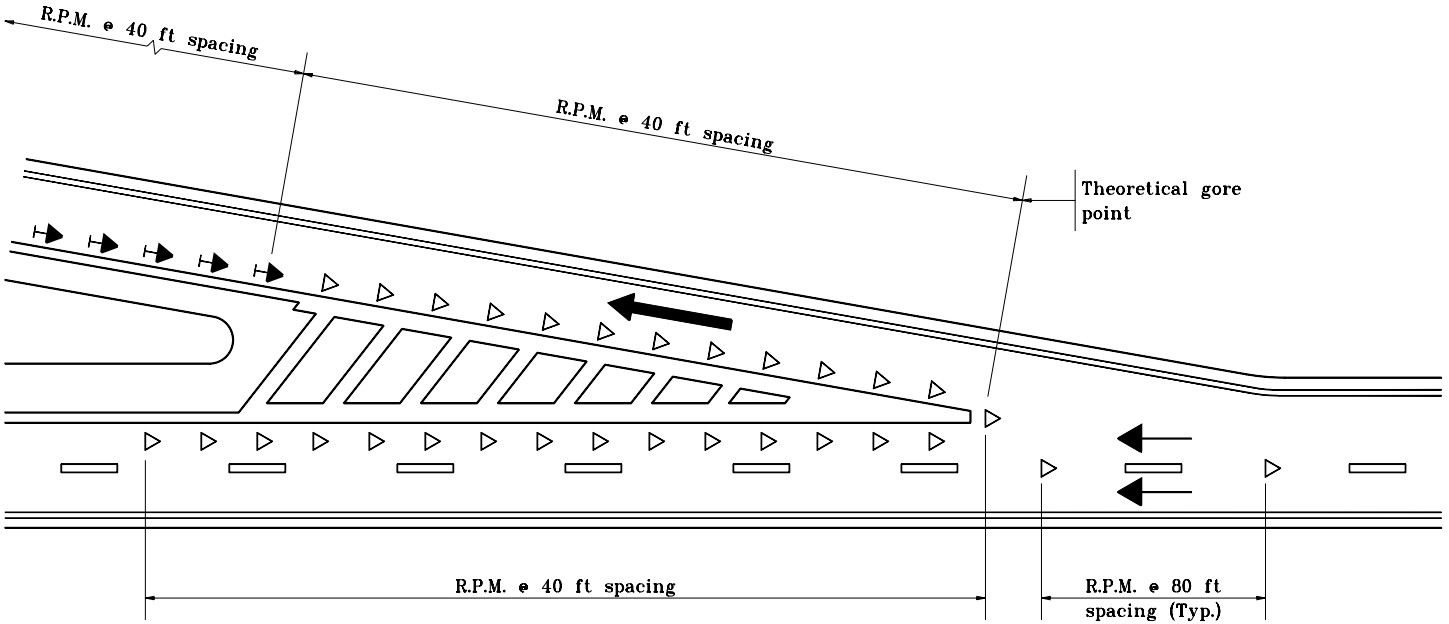

LEGEND

- One-way white marker
- Two-way yellow/red marker
- Lane line

TYPICAL EXIT RAMP SHOWING LOCATIONS OF RAISED PAVEMENT MARKERS (GORE AREA) DETAIL A

INDIANA DEPARTMENT OF TRANSPORTATION

RAISED PAVEMENT MARKERS TYPICAL LOCATIONS

MARCH 1995

STANDARD DRAWING NO. **E 808-MKRM-01**

ANTHONY L. URENOVICH REGISTERED No. 18095 STATE OF INDIANA PROFESSIONAL ENGINEER

DESIGN STANDARDS ENGINEER

DETAILS PLACED IN THIS FORMAT 11-15-99

/s/ Anthony L. Uremovich 11-15-99
DESIGN STANDARDS ENGINEER DATE

/s/ Firooz Zandi 11-15-99
CHIEF HIGHWAY ENGINEER DATE

ORIGINALLY APPROVED 3-01-95

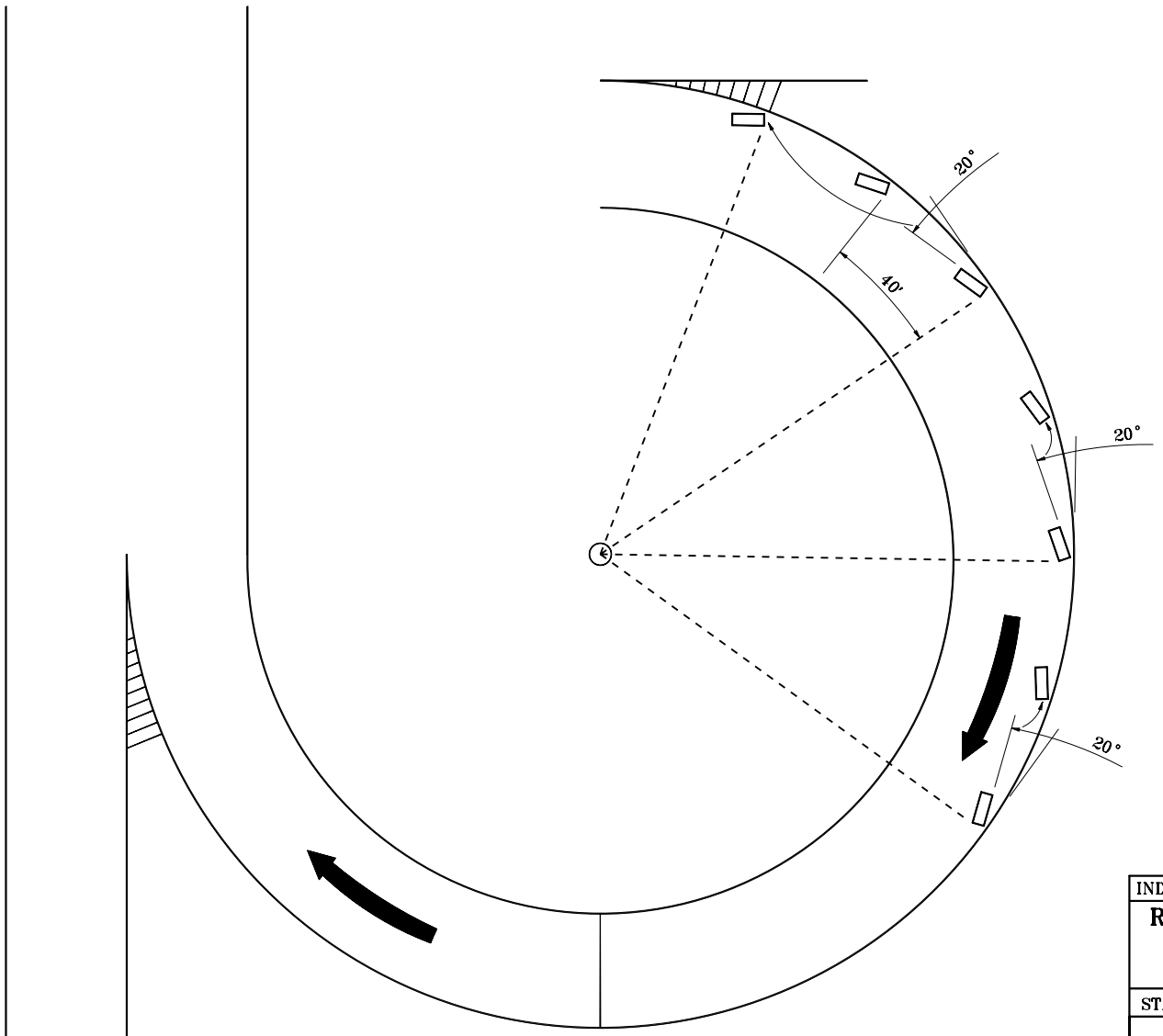

TYPICAL LOOP RAMP SHOWING LOCATIONS OF RAISED PAVEMENT MARKERS
DETAIL B

INDIANA DEPARTMENT OF TRANSPORTATION

RAISED PAVEMENT MARKERS TYPICAL LOCATIONS

MARCH 1995

STANDARD DRAWING NO. **E 808-MKRM-02**

ANTHONY L. UREMOVICH REGISTERED No. 18095 STATE OF INDIANA PROFESSIONAL ENGINEER

DESIGN STANDARDS ENGINEER

DETAILS PLACED IN THIS FORMAT 11-15-99

/s/ Anthony L. Uremovich 11-15-99
DESIGN STANDARDS ENGINEER DATE

/s/ Firooz Zandi 11-15-99
CHIEF HIGHWAY ENGINEER DATE

ORIGINALLY APPROVED 3-01-95

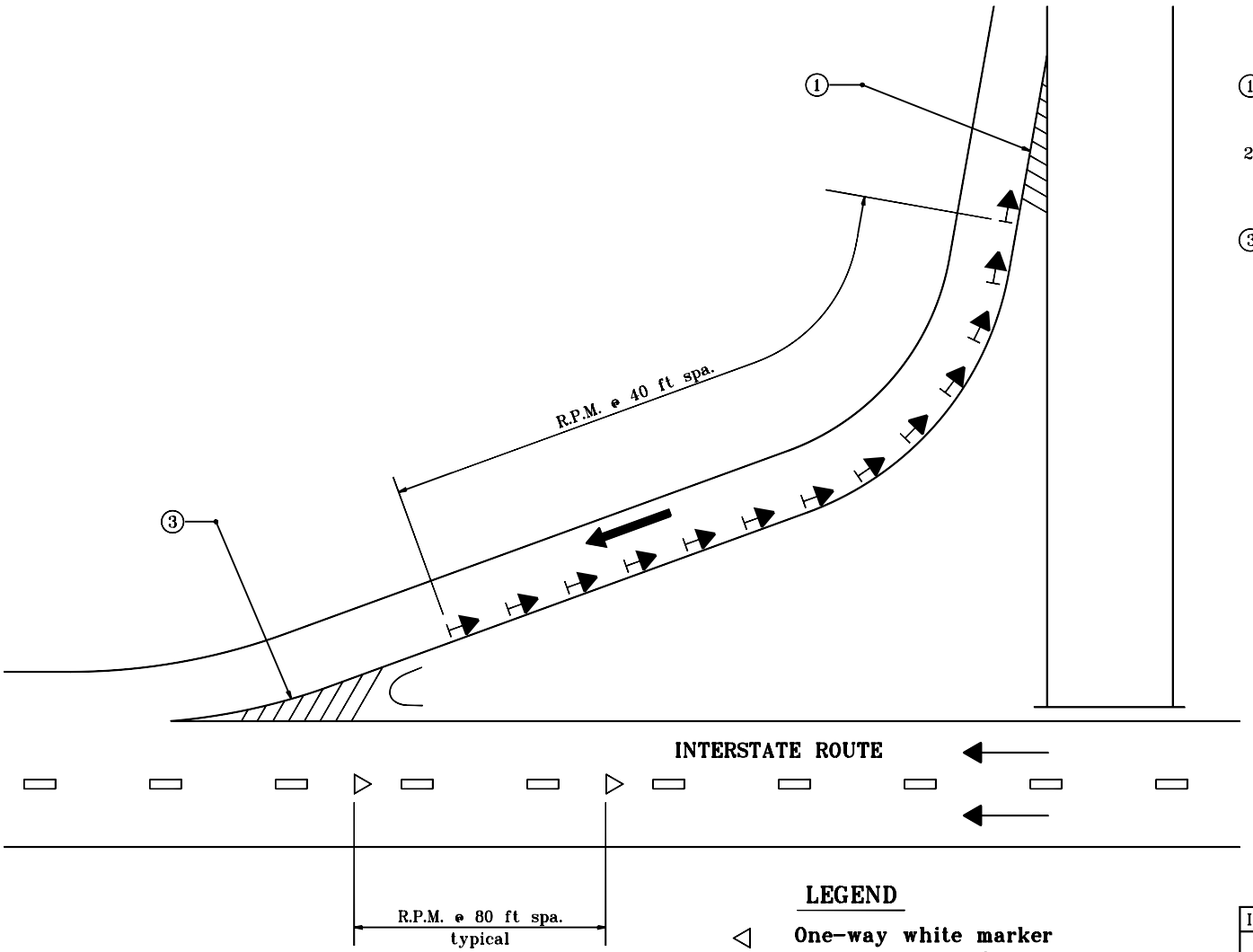

NOTES

1. See Standard Drawing E 808-MKRM-01 for Detail A.
2. If ramp has reverse curves, see Standard Drawing 808-MKRM-04 for Detail D.
3. See Standard Drawing E 808-MKRM-07 for Detail G and Standard Drawing E 808-MKRM-08 for Detail H.

LEGEND

- One-way white marker
- Two-way yellow/red marker
- Lane line

TYPICAL ENTRANCE RAMP SHOWING LOCATIONS OF RAISED PAVEMENT MARKERS (CLOVERLEAF INTERCHANGE)
DETAIL C

INDIANA DEPARTMENT OF TRANSPORTATION

RAISED PAVEMENT MARKERS TYPICAL LOCATIONS

JANUARY 2000

STANDARD DRAWING NO **E 808-MKRM-03**

ANTHONY L. UREMOVICH REGISTERED No. 18095 STATE OF INDIANA PROFESSIONAL ENGINEER

DESIGN STANDARDS ENGINEER

/s/ Anthony L. Uremovich 1-03-00
DESIGN STANDARDS ENGINEER DATE

/s/ Firooz Zandi 1-03-00
CHIEF HIGHWAY ENGINEER DATE

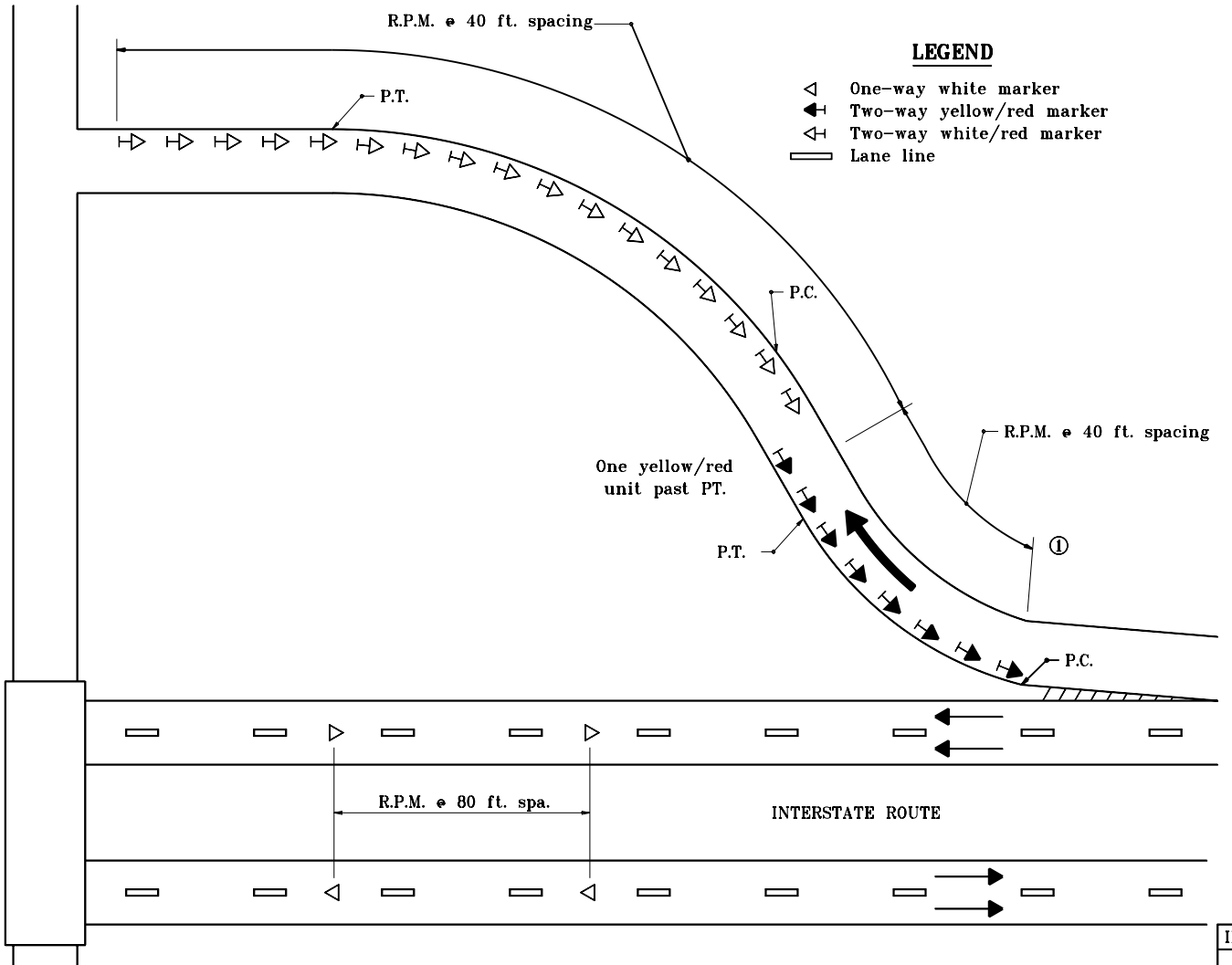

LEGEND

- One-way white marker
- Two-way yellow/red marker
- Two-way white/red marker
- Lane line

NOTE

① See Standard Drawing E 808-MKRM-01 for Detail A.

TYPICAL EXIT RAMP SHOWING LOCATIONS OF RAISED PAVEMENT MARKERS (DIAMOND OR PARCLO INTERCHANGE)
DETAIL D

INDIANA DEPARTMENT OF TRANSPORTATION

RAISED PAVEMENT MARKERS TYPICAL LOCATIONS

JANUARY 2000

STANDARD DRAWING NO **E 808-MKRM-04**

ANTHONY L. UREMOVICH REGISTERED No. 18095 STATE OF INDIANA PROFESSIONAL ENGINEER

DESIGN STANDARDS ENGINEER

/s/ Anthony L. Uremovich 1-03-00
DESIGN STANDARDS ENGINEER — DATE

/s/ Firooz Zandi 1-03-00
CHIEF HIGHWAY ENGINEER — DATE

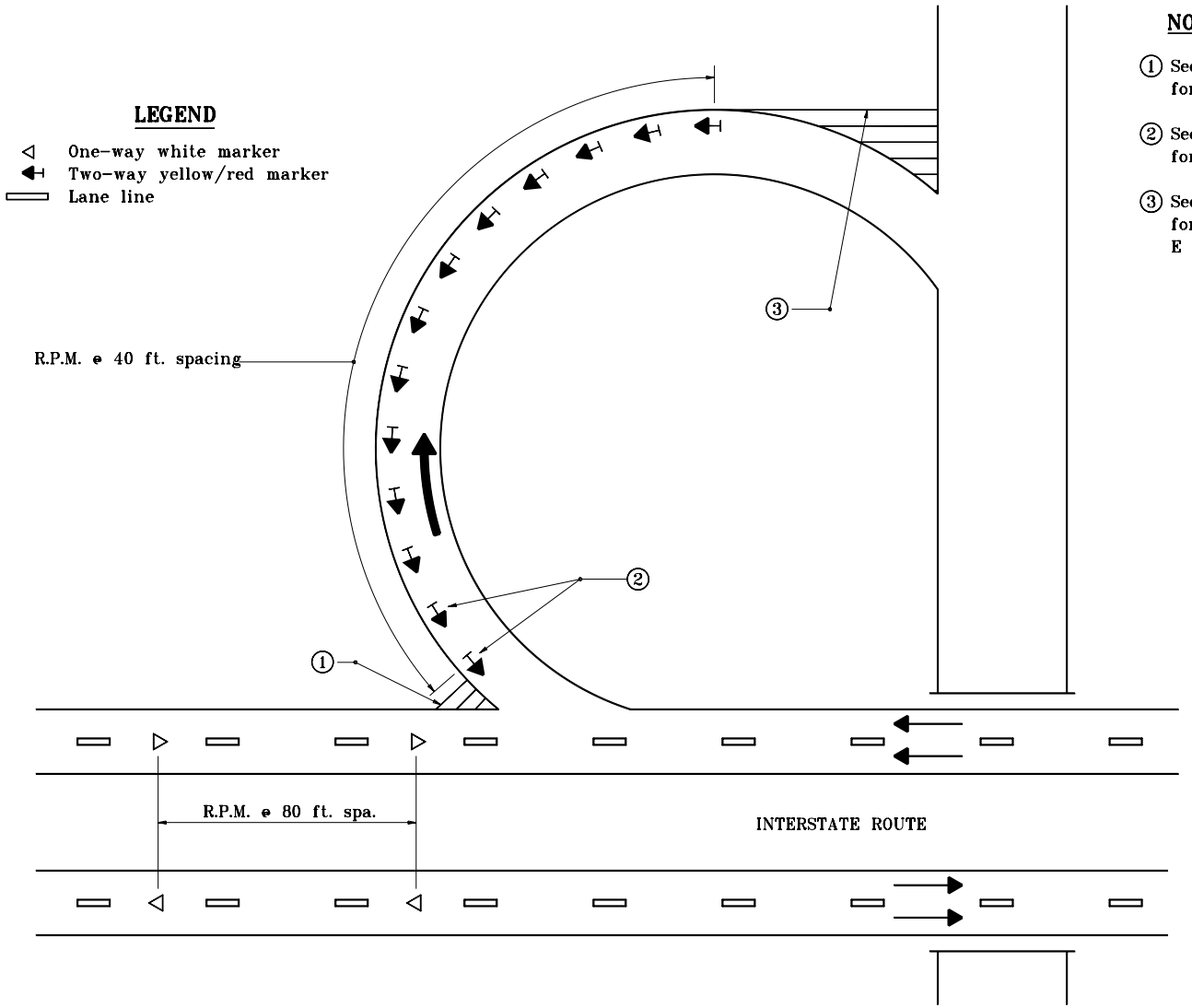

NOTES

1. See Standard Drawing E 808-MKRM-01 for Detail A.
2. See Standard Drawing E 808-MKRM-02 for Detail B.
3. See Standard Drawing E 808-MKRM-07 for Detail G and Standard Drawing E 808-MKRM-08 for Detail H.

TYPICAL EXIT RAMP SHOWING LOCATIONS OF RAISED PAVEMENT MARKERS (CLOVERLEAF INTERCHANGE)
DETAIL E

INDIANA DEPARTMENT OF TRANSPORTATION

RAISED PAVEMENT MARKERS TYPICAL LOCATIONS

JANUARY 2000

STANDARD DRAWING NO. **E 808-MKRM-05**

ANTHONY L. UREMOVICH REGISTERED No. 18095 STATE OF INDIANA PROFESSIONAL ENGINEER

DESIGN STANDARDS ENGINEER

/s/ Anthony L. Uremovich 1-03-00
DESIGN STANDARDS ENGINEER — DATE

/s/ Firooz Zandi 1-03-00
CHIEF HIGHWAY ENGINEER — DATE

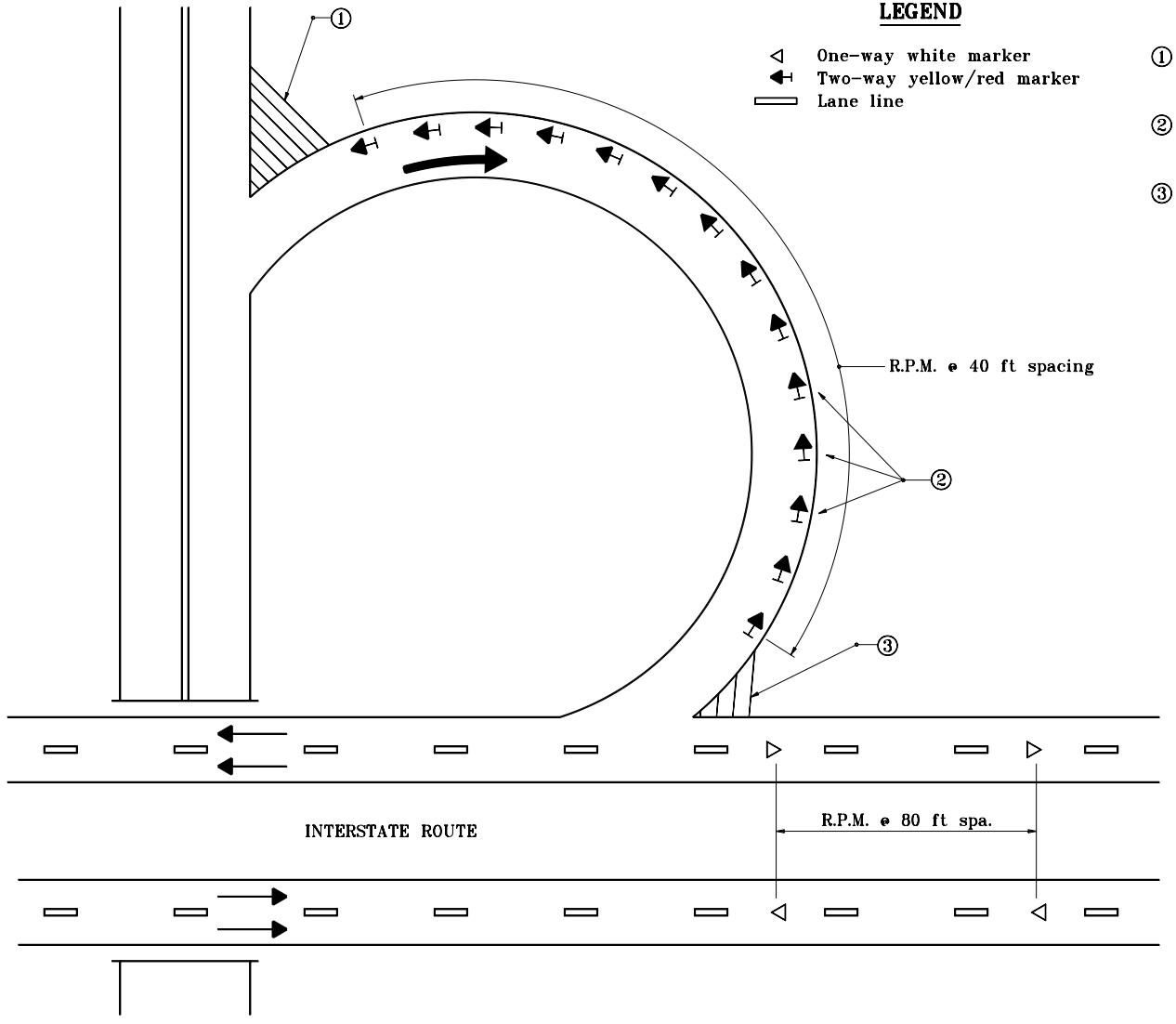

LEGEND

- One-way white marker
- Two-way yellow/red marker
- Lane line

NOTES

① See Standard Drawing E-808-MKRM-01 for Detail A.

② See Standard Drawing E-808-MKRM-02 for Detail B.

③ See Standard Drawing E-808-MKRM-07 for Detail G and Standard Drawing E-808-MKRM-08 for Detail H.

TYPICAL EXIT RAMP SHOWING LOCATIONS OF RAISED PAVEMENT MARKERS (CLOVERLEAF INTERCHANGE)
DETAIL F

INDIANA DEPARTMENT OF TRANSPORTATION

RAISED PAVEMENT MARKERS TYPICAL LOCATIONS

JANUARY 2000

STANDARD DRAWING NO **E 808-MKRM-06**

ANTHONY L. UREMOVICH REGISTERED No. 18095 STATE OF INDIANA PROFESSIONAL ENGINEER

DESIGN STANDARDS ENGINEER

/s/ Anthony L. Uremovich 1-03-00
DESIGN STANDARDS ENGINEER — DATE

/s/ Firooz Zandi 1-03-00
CHIEF HIGHWAY ENGINEER — DATE

LEGEND

◁ One-way white marker
◀ Two-way yellow/red marker
Lane line

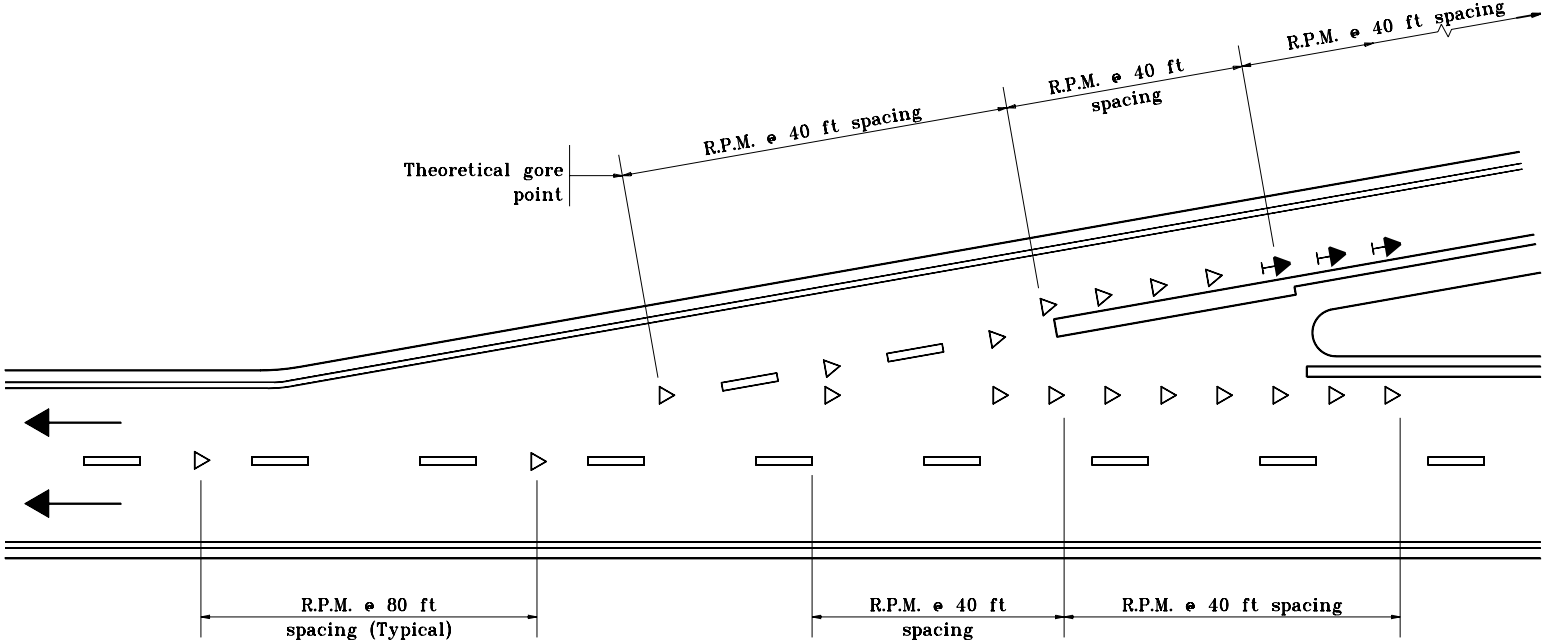

TYPICAL ENTRANCE RAMP SHOWING LOCATIONS OF RAISED PAVEMENT MARKERS (GORE AREA)
DETAIL G

INDIANA DEPARTMENT OF TRANSPORTATION

RAISED PAVEMENT MARKERS TYPICAL LOCATIONS

MARCH 1995

STANDARD DRAWING NO. **E 808-MKRM-07**

ANTHONY L. UREMOVICH REGISTERED No. 18095 STATE OF INDIANA PROFESSIONAL ENGINEER

DESIGN STANDARDS ENGINEER

DETAILS PLACED IN THIS FORMAT	11-15-99
/s/ Anthony L. Uremovich DESIGN STANDARDS ENGINEER	11-15-99 DATE
/s/ Firooz Zandi CHIEF HIGHWAY ENGINEER	11-15-99 DATE
ORIGINALLY APPROVED	3-01-95

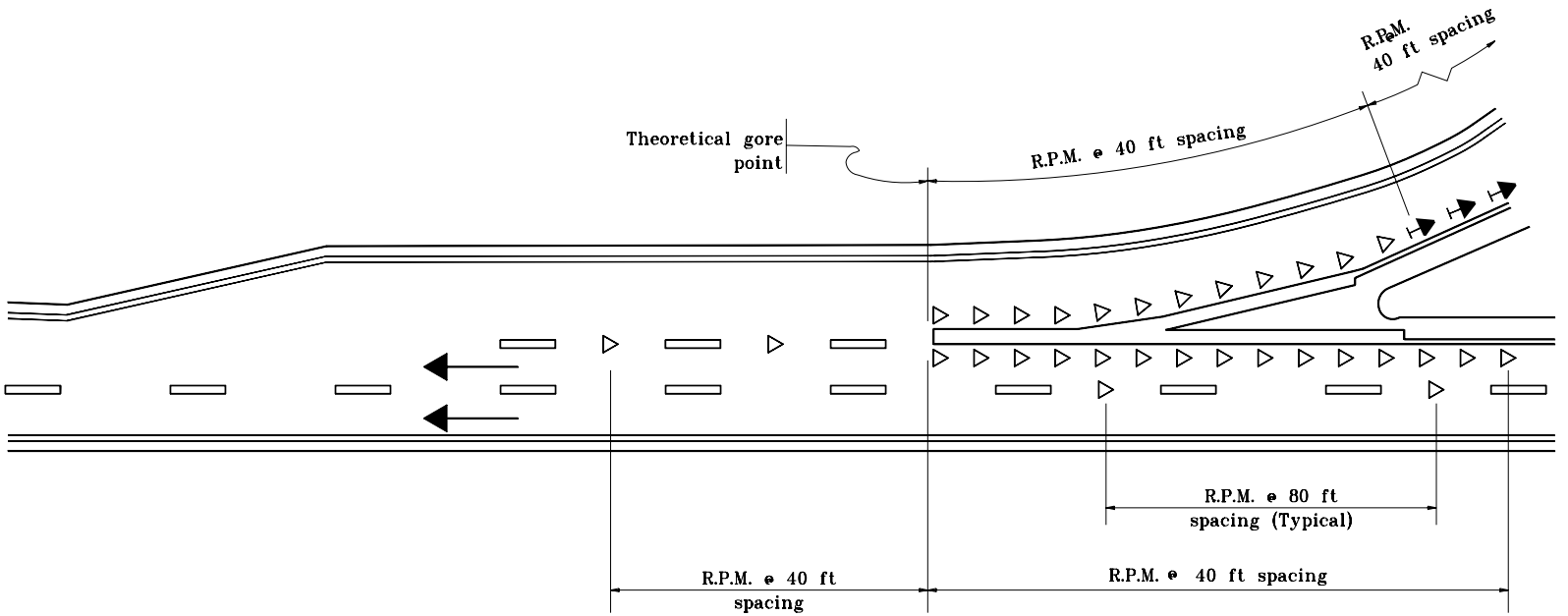

LEGEND

- One-way white marker
- Two-way yellow/red marker
- Lane line

TYPICAL ENTRANCE RAMP SHOWING LOCATIONS OF RAISED PAVEMENT MARKERS (GORE AREA)
DETAIL H

INDIANA DEPARTMENT OF TRANSPORTATION

RAISED PAVEMENT MARKERS TYPICAL LOCATIONS

MARCH 1995

STANDARD DRAWING NO **E 808-MKRM-08**

ANTHONY L. URENOVICH REGISTERED No. 18095 STATE OF INDIANA PROFESSIONAL ENGINEER

DESIGN STANDARDS ENGINEER

DETAILS PLACED IN THIS FORMAT 11-15-99

/s/ Anthony L. Uremovich 11-15-99
DESIGN STANDARDS ENGINEER DATE

/s/ Firooz Zandi 11-15-99
CHIEF HIGHWAY ENGINEER DATE

ORIGINALLY APPROVED 3-01-95

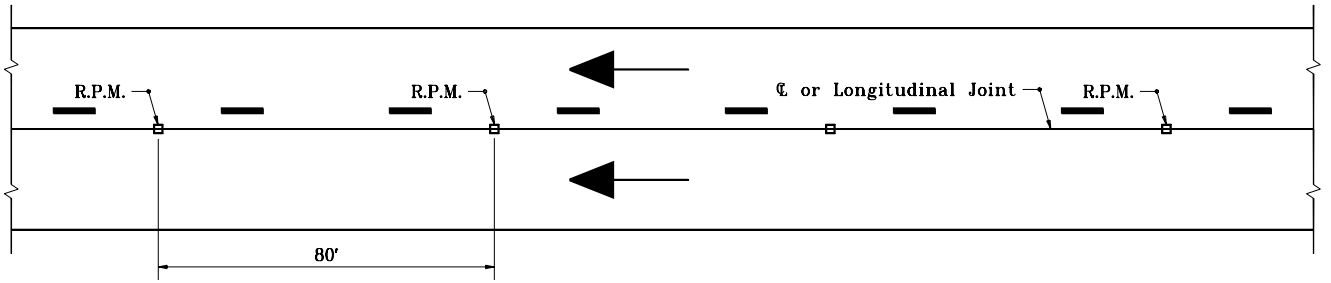

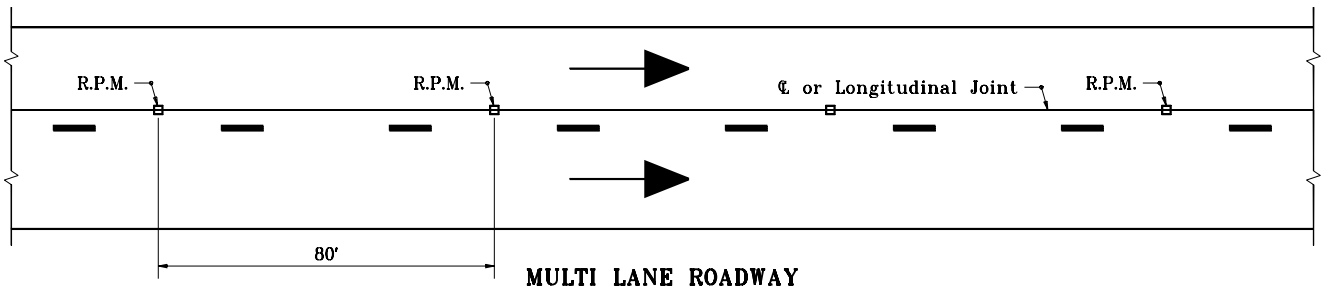

MULTI LANE ROADWAY

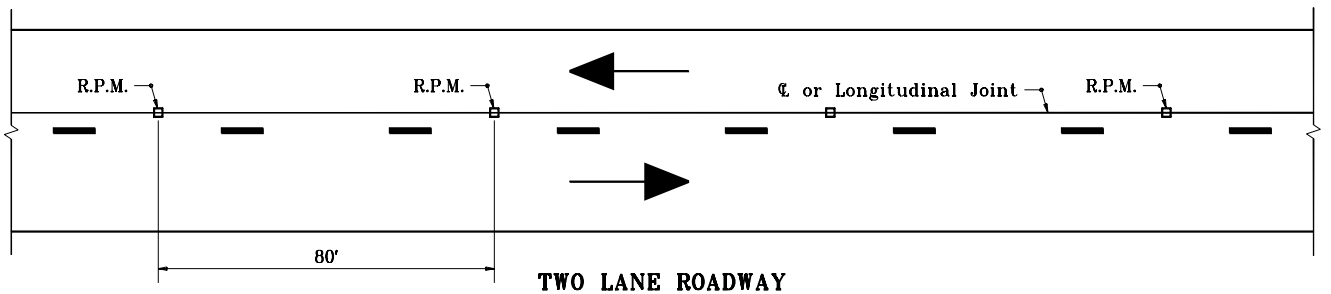

TWO LANE ROADWAY
TANGENT SECTION

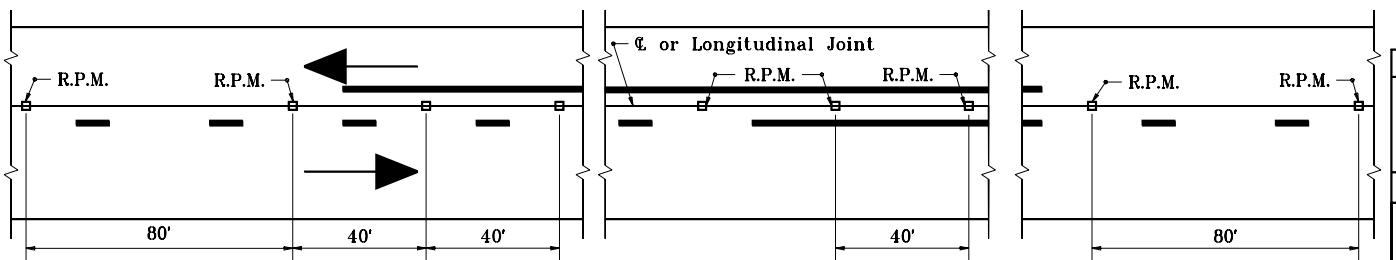

TWO LANE ROADWAY
NO PASSING ZONE

INDIANA DEPARTMENT OF TRANSPORTATION

PLACEMENT OF SNOWPLOWABLE RAISED PAVEMENT MARKERS

MARCH 1995

STANDARD DRAWING NO **E 808-MKRM-09**

ANTHONY L. UREMOVICH REGISTERED No. 18095 STATE OF INDIANA PROFESSIONAL ENGINEER

DESIGN STANDARDS ENGINEER

DETAILS PLACED IN THIS FORMAT 11-15-99

/s/ Anthony L. Uremovich 11-15-99
DESIGN STANDARDS ENGINEER DATE

/s/ Firooz Zandi 11-15-99
CHIEF HIGHWAY ENGINEER DATE

ORIGINALLY APPROVED 3-01-95

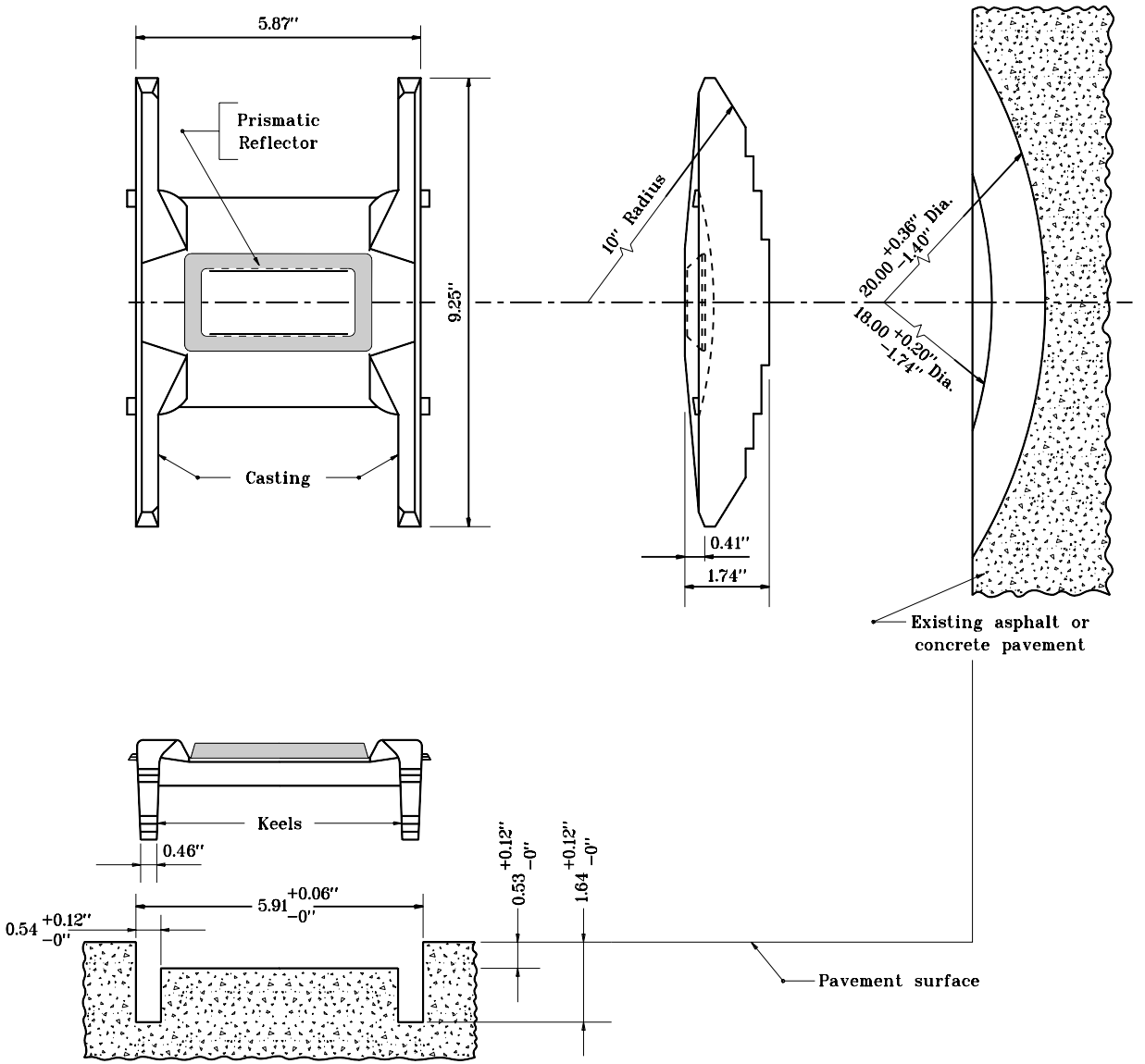

INDIANA DEPARTMENT OF TRANSPORTATION

RAISED PAVEMENT MARKER CAST METAL BASE, TYPE 1

SEPTEMBER 1998

STANDARD DRAWING NO. **E 808-MKRM-10**

ANTHONY L. UREMOVICH REGISTERED No. 18095 STATE OF INDIANA PROFESSIONAL ENGINEER

DESIGN STANDARDS ENGINEER

DETAILS PLACED IN THIS FORMAT	11-15-99
/s/ Anthony L. Uremovich DESIGN STANDARDS ENGINEER	11-15-99 DATE
/s/ Firooz Zandi CHIEF HIGHWAY ENGINEER	11-15-99 DATE
ORIGINALLY APPROVED	9-01-98

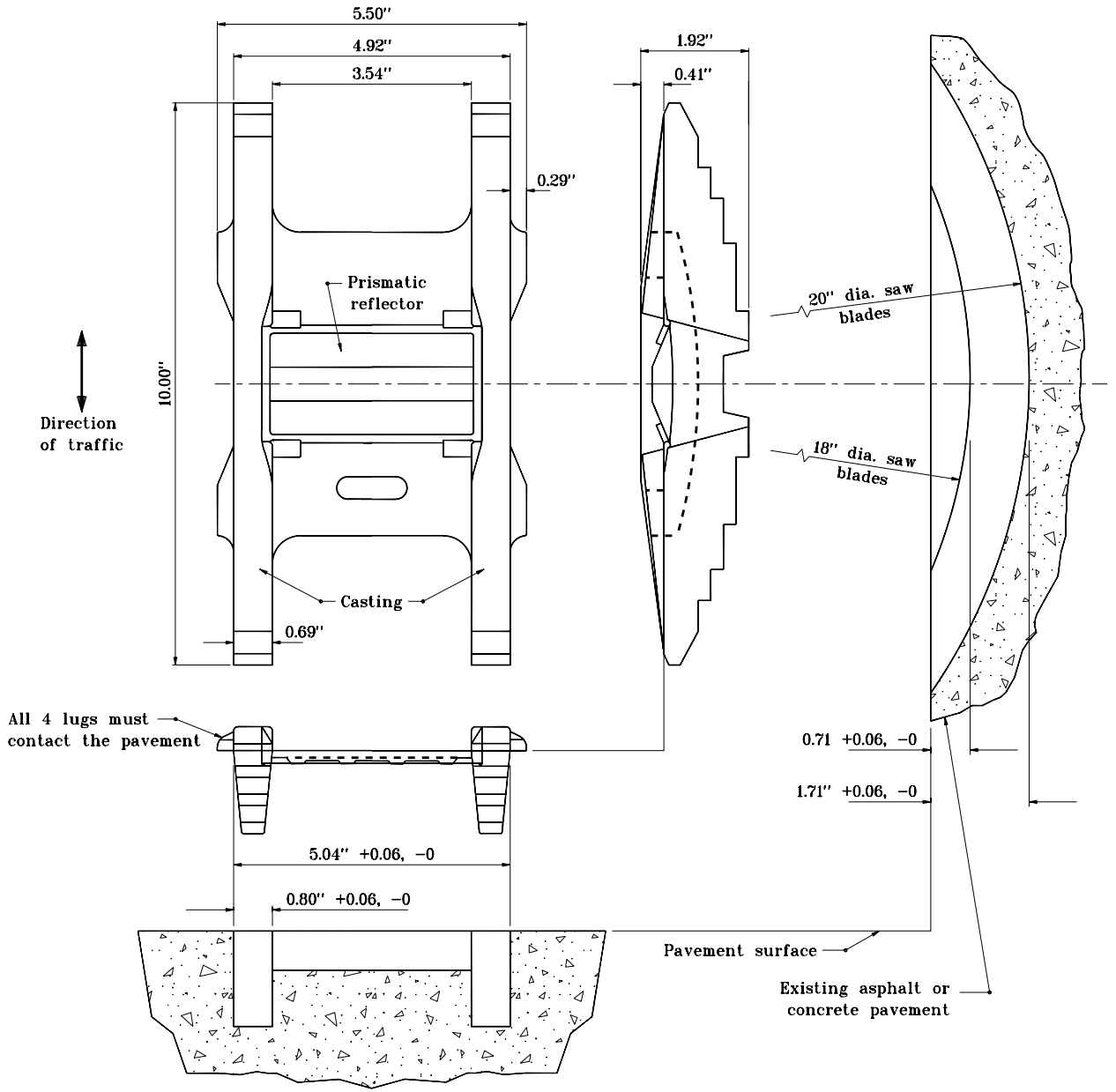

INDIANA DEPARTMENT OF TRANSPORTATION

RAISED PAVEMENT MARKERS CAST METAL BASE, TYPE 2

JANUARY 2000

STANDARD DRAWING NO. **E 808-MKRM-11**

ANTHONY L. UREMOVICH REGISTERED No. 18095 STATE OF INDIANA PROFESSIONAL ENGINEER

DESIGN STANDARDS ENGINEER

/s/ Anthony L. Uremovich 1-03-00
DESIGN STANDARDS ENGINEER — DATE

/s/ Firooz Zandi 1-03-00
CHIEF HIGHWAY ENGINEER — DATE

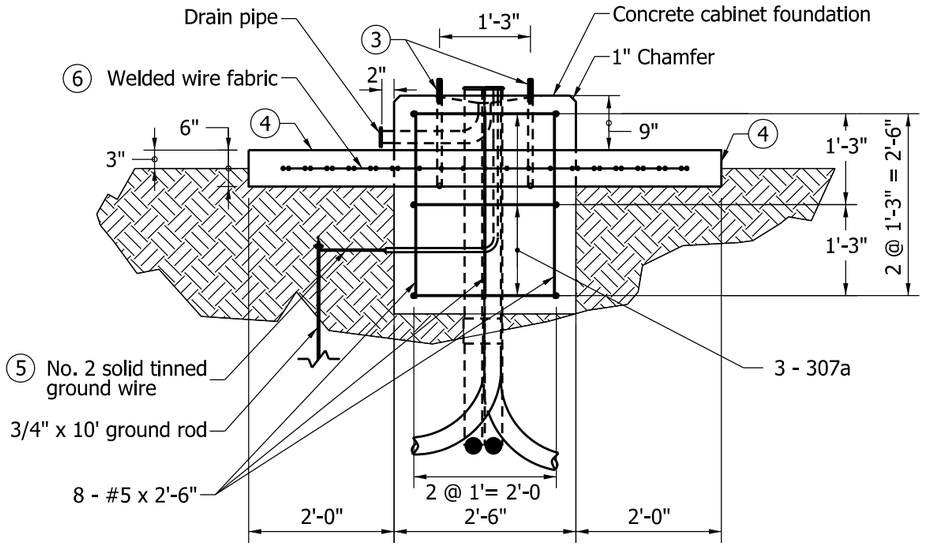

SECTION A-A

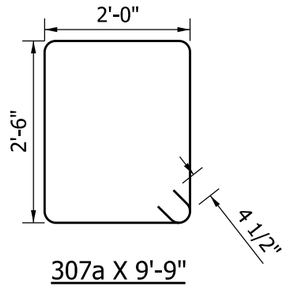

307a X 9'-9"

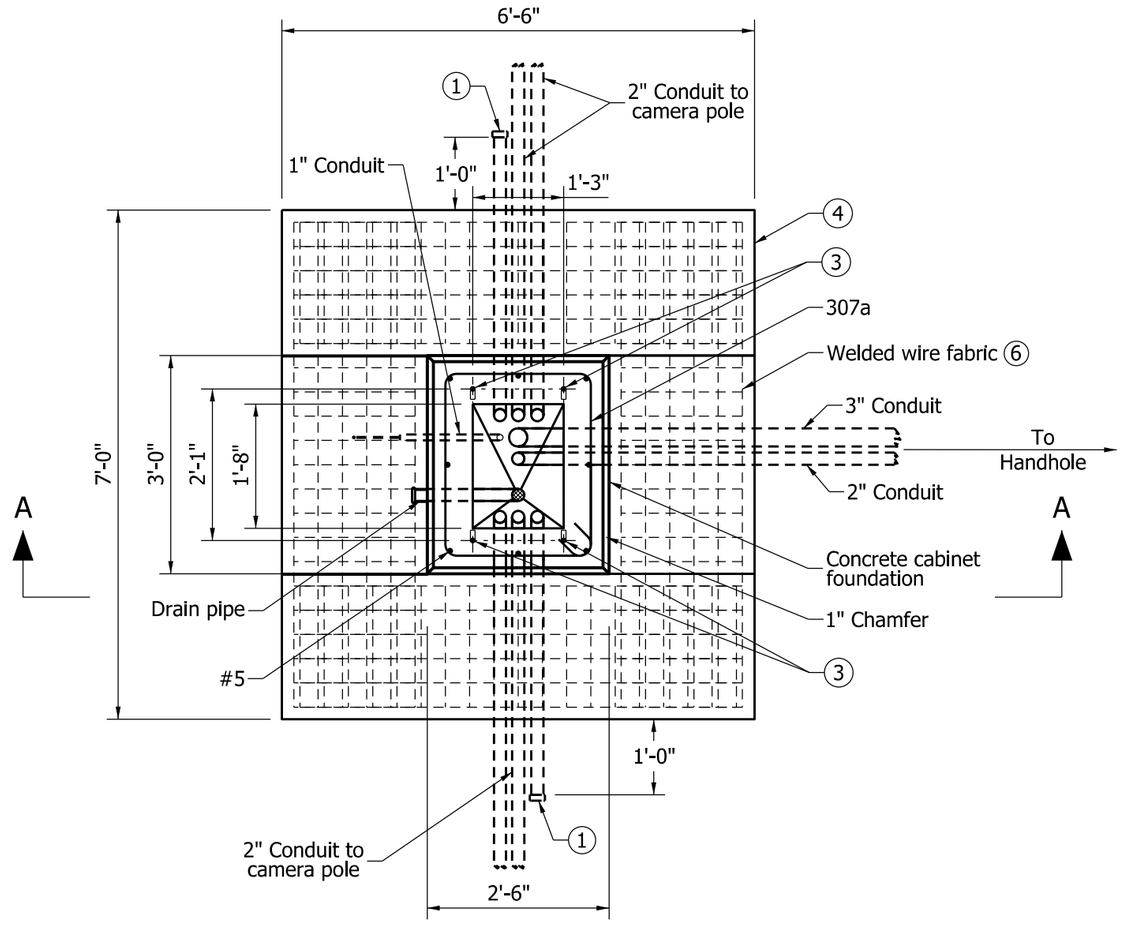

PLAN VIEW

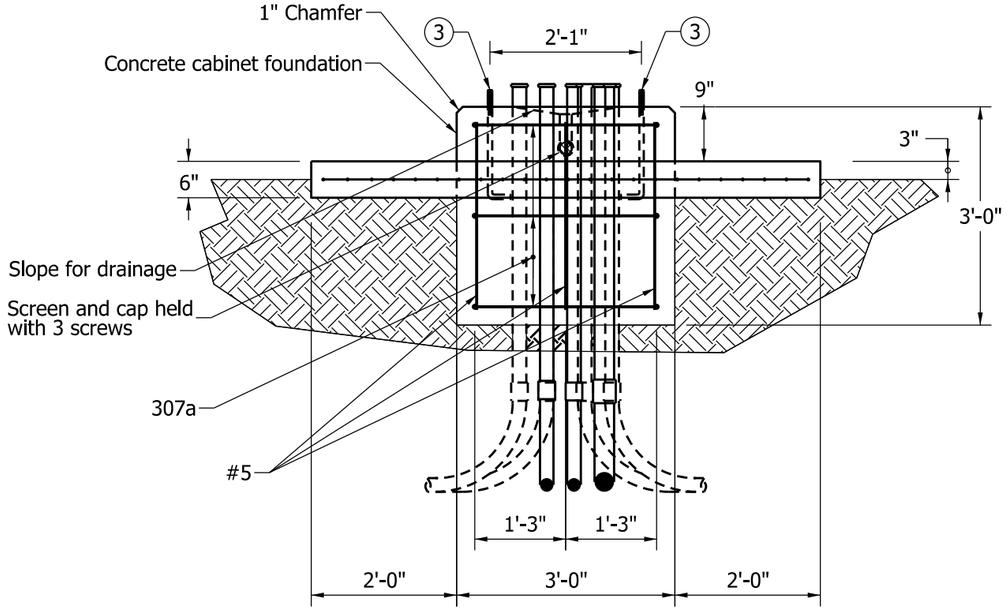

SIDE VIEW

NOTES:

1. 2" conduit capped off for future use.
2. Direction and actual location of conduit may vary due to service point and camera pole placement.
3. 3/4" x 18" anchor bolt as shown on Standard Drawing E 805 SGPB-01.
4. Concrete footpad shall be sloped to drain outward.
5. Bind ground rod to foundation using No. 2 solid tinned ground wire.
6. Welded wire fabric shall be 6 x 6 W6 x W6.

INDIANA DEPARTMENT OF TRANSPORTATION

ITS CONTROLLER CABINET FOUNDATION VIRTUAL WEIGH-IN-MOTION (VWIM)

SEPTEMBER 2012

STANDARD DRAWING NO. E 809-ICCF-01

RICHARD L. VanCLEAVE REGISTERED No. 9750 STATE OF INDIANA PROFESSIONAL ENGINEER

/s/ Richard L. Van Cleave 09/04/12
SUPERVISOR, ROADWAY STANDARDS DATE

/s/ Mark A. Miller 09/04/12
CHIEF ENGINEER DATE

CABINET EXTERIOR

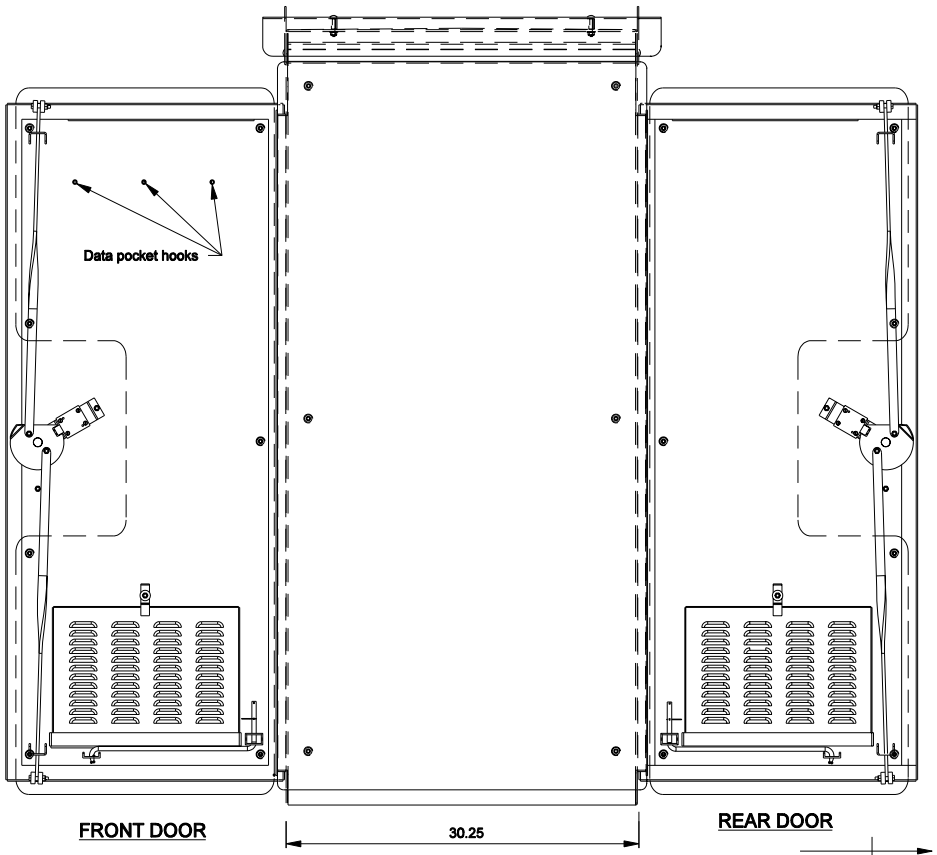

SIDE VIEW

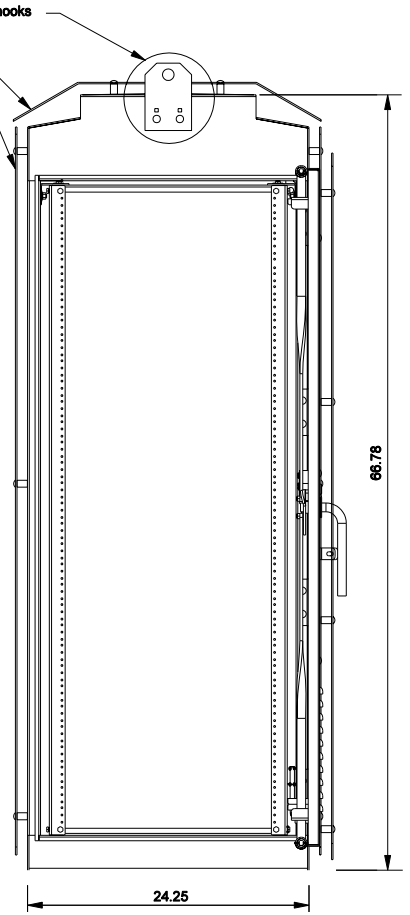

REAR VIEW
WITH DOOR OPEN

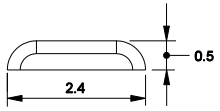

DEPTH = 1/8 "

DOOR FILTER
LOUVRE DETAIL

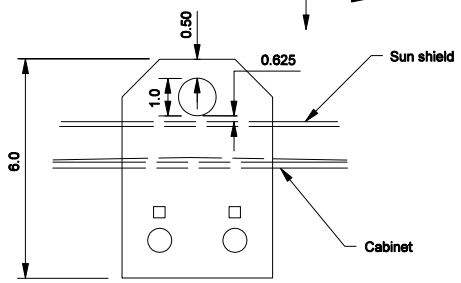

DETAIL A
NTS

NOTES:

1. See Standard Drawings E 809-ITCS-01A thru -07 for additional ITS cabinet details.

All dimensions are in inches

INDIANA DEPARTMENT OF TRANSPORTATION

INDOT ITS CABINET DETAIL

MARCH 2006

STANDARD DRAWING NO. E 809-ITSC-01

RICHARD L. VanCLEAVE REGISTERED No. 9750 STATE OF INDIANA PROFESSIONAL ENGINEER

DESIGN STANDARDS ENGINEER

/s/ Richard L. VanCleave 3-01-06
DESIGN STANDARDS ENGINEER DATE

/s/ Richard K. Smutzer 3-01-06
CHIEF HIGHWAY ENGINEER DATE

NOTES:

1. See Standard Drawings E 809-ITCS-01 or 02 thru -07 for additional ITS cabinet details.

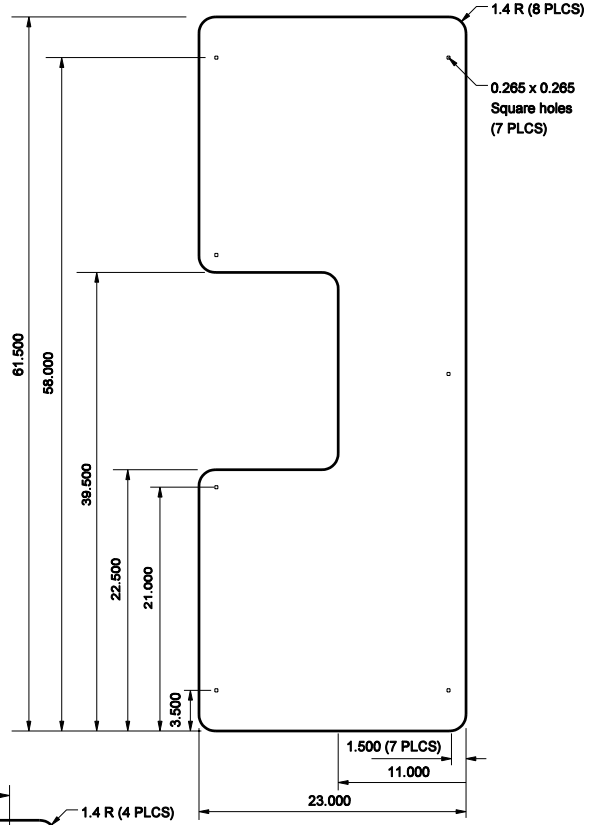

SUN SHIELD DOOR

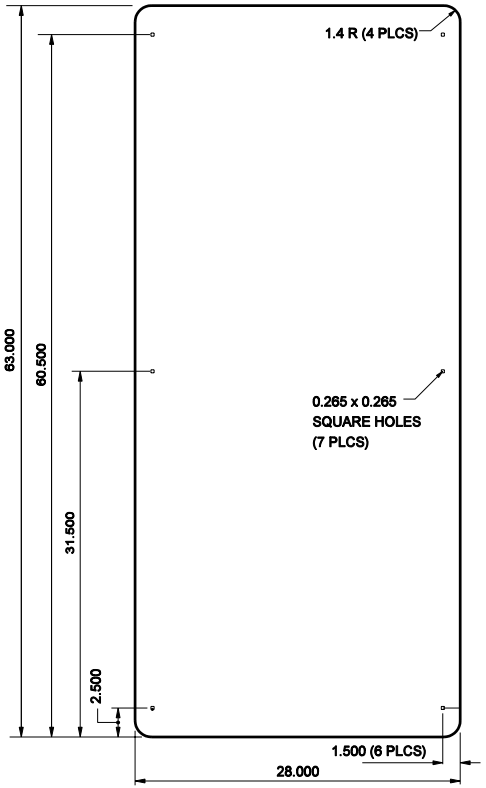

SUN SHIELD SIDE

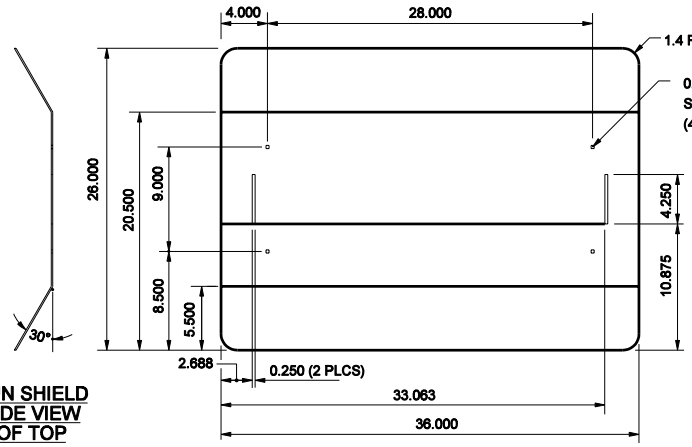

SUN SHIELD TOP VIEW

SUN SHIELD SIDE VIEW OF TOP

Sun Shield Notes:

1. Corner cuts are 45-degree cuts, 1/2 " back
2. All sun shield shall use a 1" spacer

All dimensions are in inches

INDIANA DEPARTMENT OF TRANSPORTATION

INDOT ITS CABINET DETAIL

MARCH 2006

STANDARD DRAWING NO. E 809-ITSC-01A

RICHARD L. VanCLEAVE REGISTERED No. 9750 STATE OF INDIANA PROFESSIONAL ENGINEER

DESIGN STANDARDS ENGINEER

/s/ Richard L. VanCleave 3-01-06
DESIGN STANDARDS ENGINEER DATE

/s/ Richard K. Smutzer 3-01-06
CHIEF HIGHWAY ENGINEER DATE

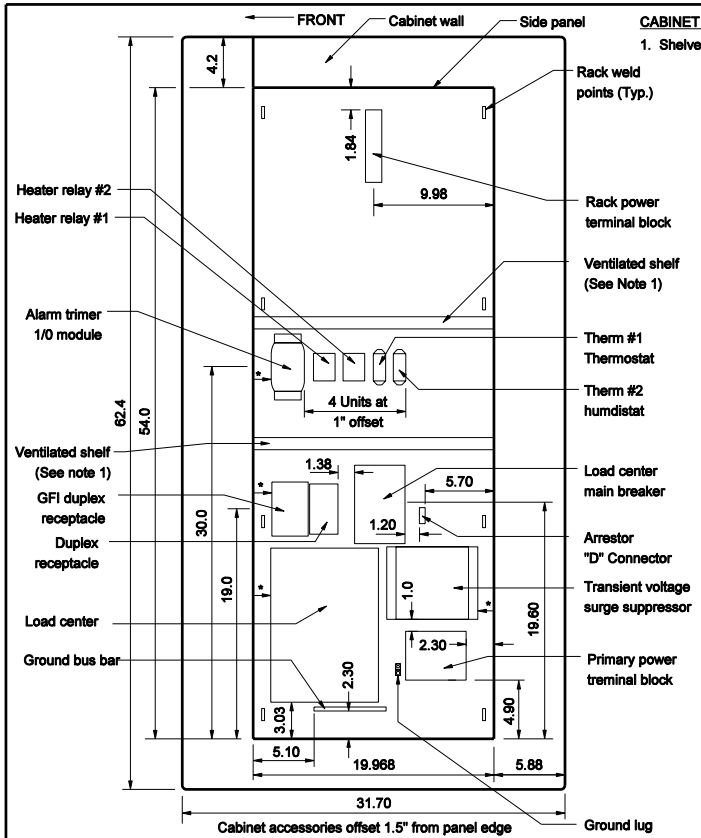

CABINET SIDE PANEL
POWER DISTRIBUTION

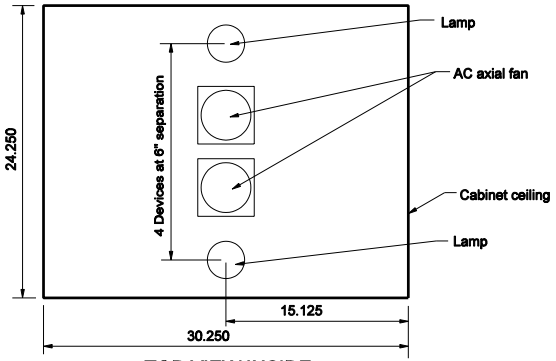

TOP VIEW INSIDE

CABINET PANEL NOTES:

1. Shelves shall be capable of being relocated.

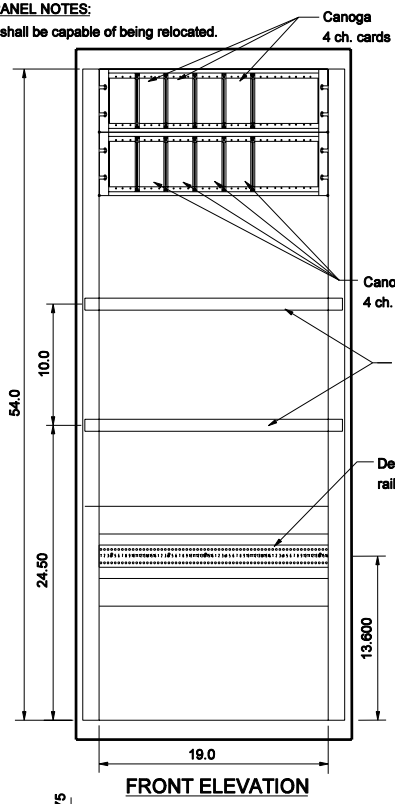

FRONT ELEVATION

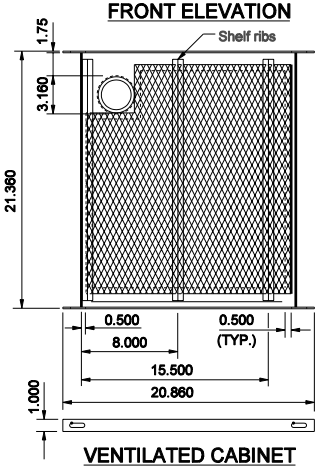

VENTILATED CABINET
SHELF BOTTOM VIEW

VENTILATED SHELF NOTES:

1. Tack weld screen to bottom of shelf.
2. Tack weld ribs over screen to bottom of shelf in locations shown.
3. Press bushing in from top of shelf.
4. Material Notes:
   Shelf frame-0.125 alum.
   screen-0.125 expanded alum.w/0.5" mesh
   ribs - 0.125 x 0.625 x 0.625 alum. angle

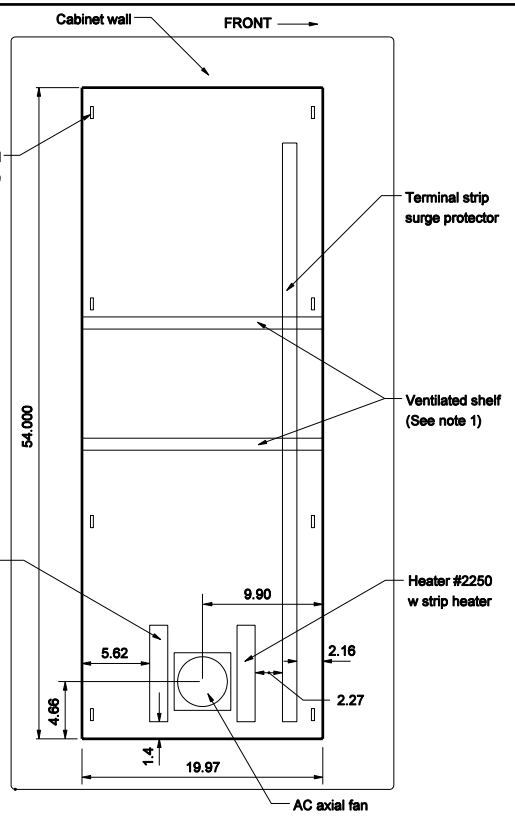

CABINET SIDE PANEL
HEATER

NOTES:

1. See Standard Drawings E 809-ITCS-01, -01A or -03 thru -07 for additional ITS cabinet details.

All dimensions are in inches

INDIANA DEPARTMENT OF TRANSPORTATION

INDOT ITS CABINET SCHEMATIC

MARCH 2006

STANDARD DRAWING NO. E 809-ITSC-02

RICHARD L. VanCLEAVE REGISTERED No. 9750 STATE OF INDIANA PROFESSIONAL ENGINEER

DESIGN STANDARDS ENGINEER

/s/ Richard L. VanCleave 3-01-06
DESIGN STANDARDS ENGINEER DATE

/s/ Richard K. Smutzer 3-01-06
CHIEF HIGHWAY ENGINEER DATE

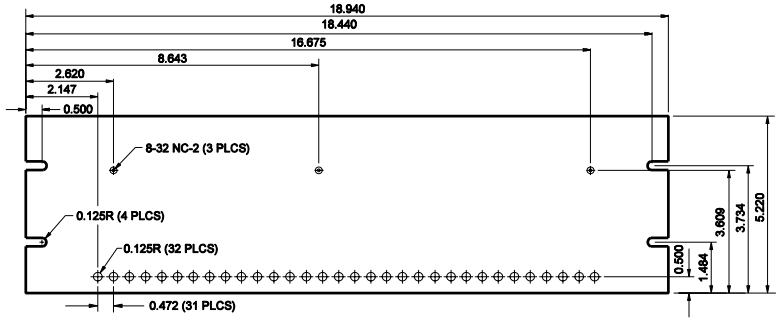

DETECTOR CARD DIN RAIL DETAIL

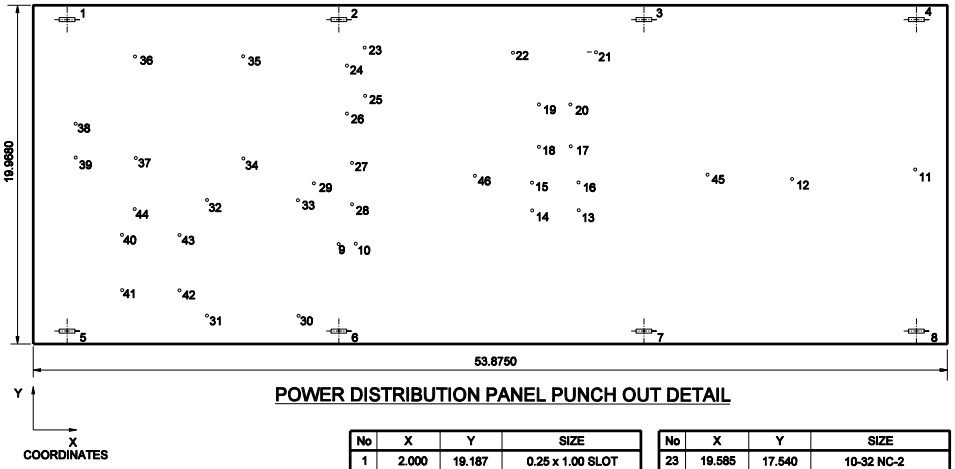

POWER DISTRIBUTION PANEL PUNCH OUT DETAIL

No	X	Y	SIZE
1	2.000	19.187	0.25 x 1.00 SLOT
2	18.000		
3	36.000		
4	52.000	19.187	
5	2.000	0.781	
6	18.000		
7	36.000		
8	52.000	0.781	0.25 x 1.00 SLOT
9	18.000	6.000	0.125 DIA
10	19.000	6.000	0.125 DIA
11	52.000	10.234	8-32 NC-2
12	44.688	9.734	
13	32.180	7.950	
14	29.430	7.950	
15	29.430	9.600	
16	32.180	9.600	
17	31.740	11.708	
18	29.870	11.708	
19	29.870	14.175	
20	31.740	14.175	
21	33.250	17.234	
22	28.375	17.234	8-32 NC-2

No	X	Y	SIZE
23	19.585	17.540	10-32 NC-2
24	18.522	16.478	
25	19.585	14.728	
26	18.522	13.665	
27	18.803	10.736	
28	18.803	8.336	
29	16.553	9.536	
30	15.608	1.750	
31	10.250	1.750	
32	10.250	8.550	
33	15.608	8.550	
34	12.428	11.000	
35	12.428	17.000	
36	6.053	17.000	
37	6.053	11.000	
38	2.500	13.000	
39	2.500	11.000	
40	5.250	6.500	
41	5.250	3.250	
42	8.625	3.250	
43	8.625	6.500	
44	6.000	8.000	10-32 NC-2
45	39.750	10.000	8-32 NC-2
46	26.00	10.000	8-32 NC-2

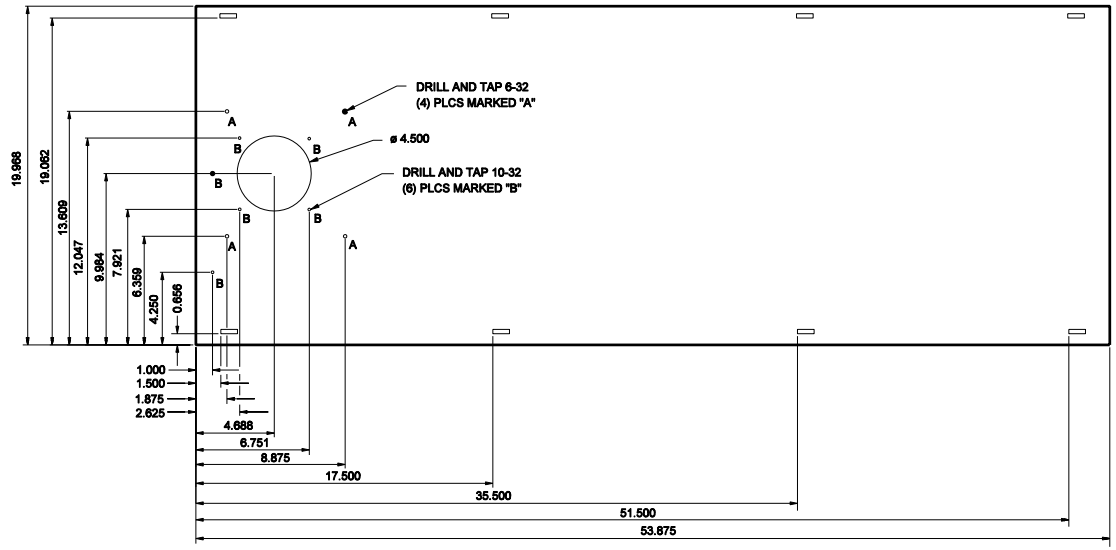

HEATER PANEL PUNCH OUT DETAILS

NOTES:

1. See Standard Drawings E 809-ITCS-01 thru -02 or -03 thru -07 for additional ITS cabinet details.

All dimensions are in inches

INDIANA DEPARTMENT OF TRANSPORTATION

CABINET PUNCH OUT DETAILS

MARCH 2006

STANDARD DRAWING NO. E 809-ITSC-03

RICHARD L. VanCLEAVE REGISTERED No. 9750 STATE OF INDIANA PROFESSIONAL ENGINEER

DESIGN STANDARDS ENGINEER

/s/ Richard L. VanCleave 3-01-06
DESIGN STANDARDS ENGINEER DATE

/s/ Richard K. Smutzer 3-01-06
CHIEF HIGHWAY ENGINEER DATE

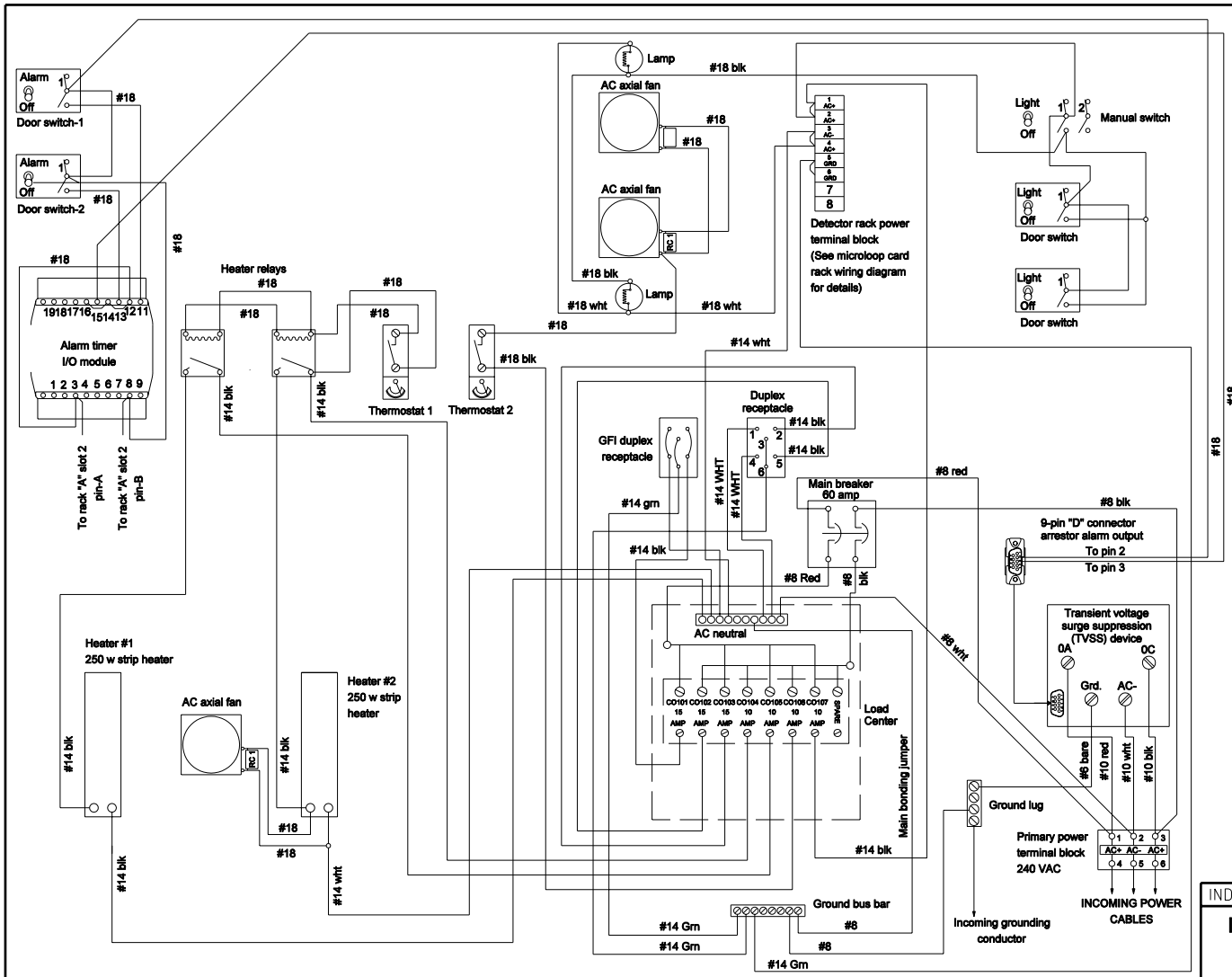

NOTES:

1. See Standard Drawings E 809-ITCS-01 thru -03 or -05 thru -07 for additional ITS cabinet details.
2. Minimum wire diameter indicated on connections between components.

INDIANA DEPARTMENT OF TRANSPORTATION

INDOT ITS CABINET SCHEMATIC

MARCH 2006

STANDARD DRAWING NO. E 809-ITSC-04

RICHARD L. VanCLEAVE REGISTERED No. 9750 STATE OF INDIANA PROFESSIONAL ENGINEER

DESIGN STANDARDS ENGINEER

/s/ Richard L. VanCleave 3-01-06
DESIGN STANDARDS ENGINEER DATE

/s/ Richard K. Smutzer 3-01-06
CHIEF HIGHWAY ENGINEER DATE

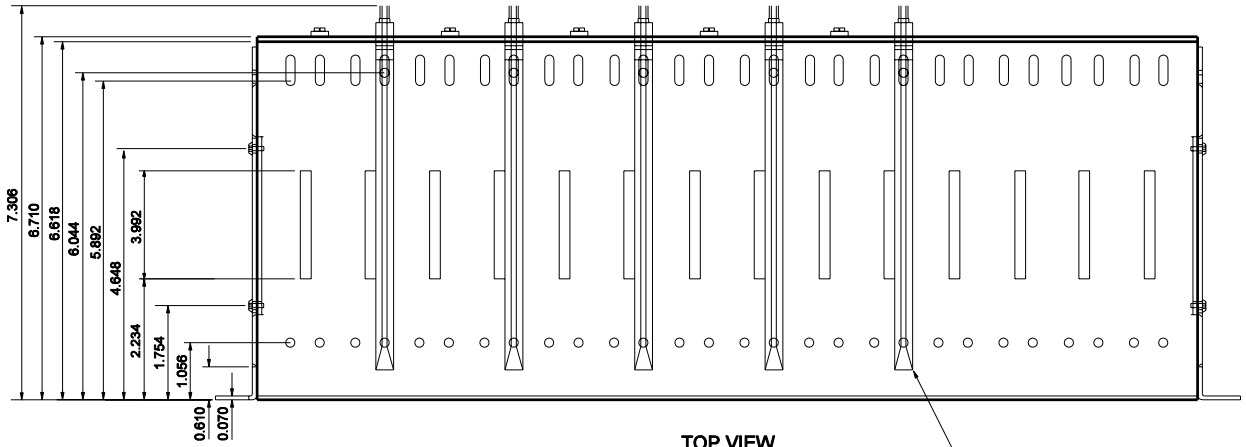

TOP VIEW

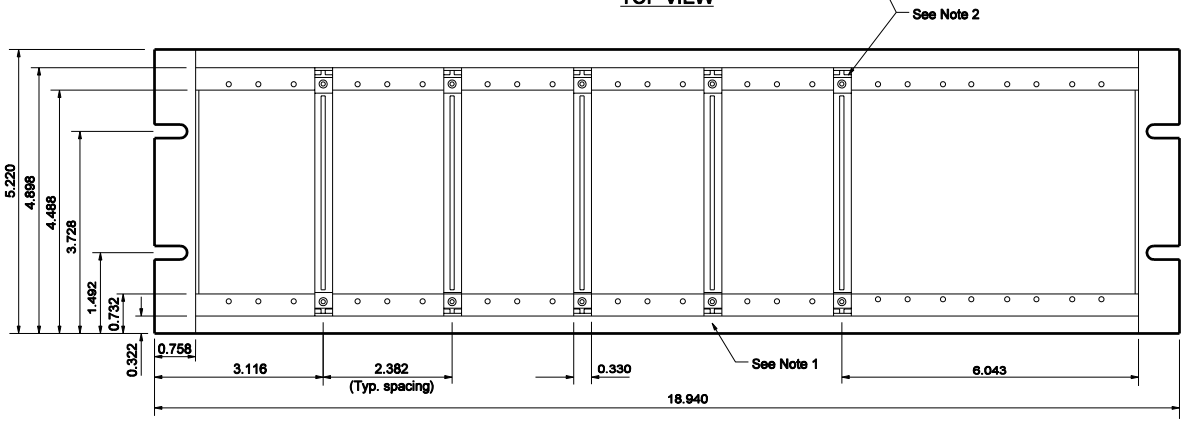

FRONT VIEW

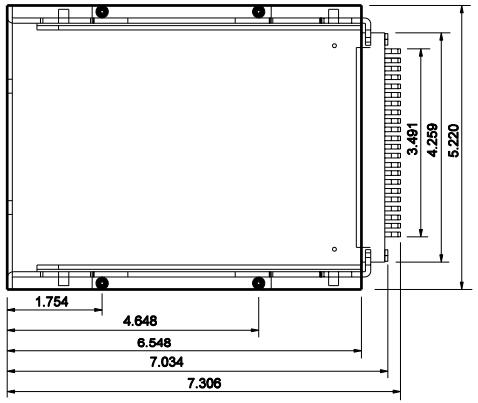

SIDE VIEW

NOTES:

1. Apply marker tape to front lip of input file chassis, top and bottom.
2. Card guides must line up with edge card connectors.
3. No card guide keys are to be installed in this assembly.
4. Depth does not include wiring.
5. See Standard Drawings E 809-ITCS-01 thru -04 or -06 thru -07 for additional ITS cabinet details.

All dimensions are in inches

INDIANA DEPARTMENT OF TRANSPORTATION

DETECTOR CARD RACK DETAIL

MARCH 2006

STANDARD DRAWING NO. E 809-ITSC-05

RICHARD L. VanCLEAVE REGISTERED No. 9750 STATE OF INDIANA PROFESSIONAL ENGINEER

DESIGN STANDARDS ENGINEER

/s/ Richard L. VanCleave 3-01-06
DESIGN STANDARDS ENGINEER DATE

/s/ Richard K. Smutzer 3-01-06
CHIEF HIGHWAY ENGINEER DATE

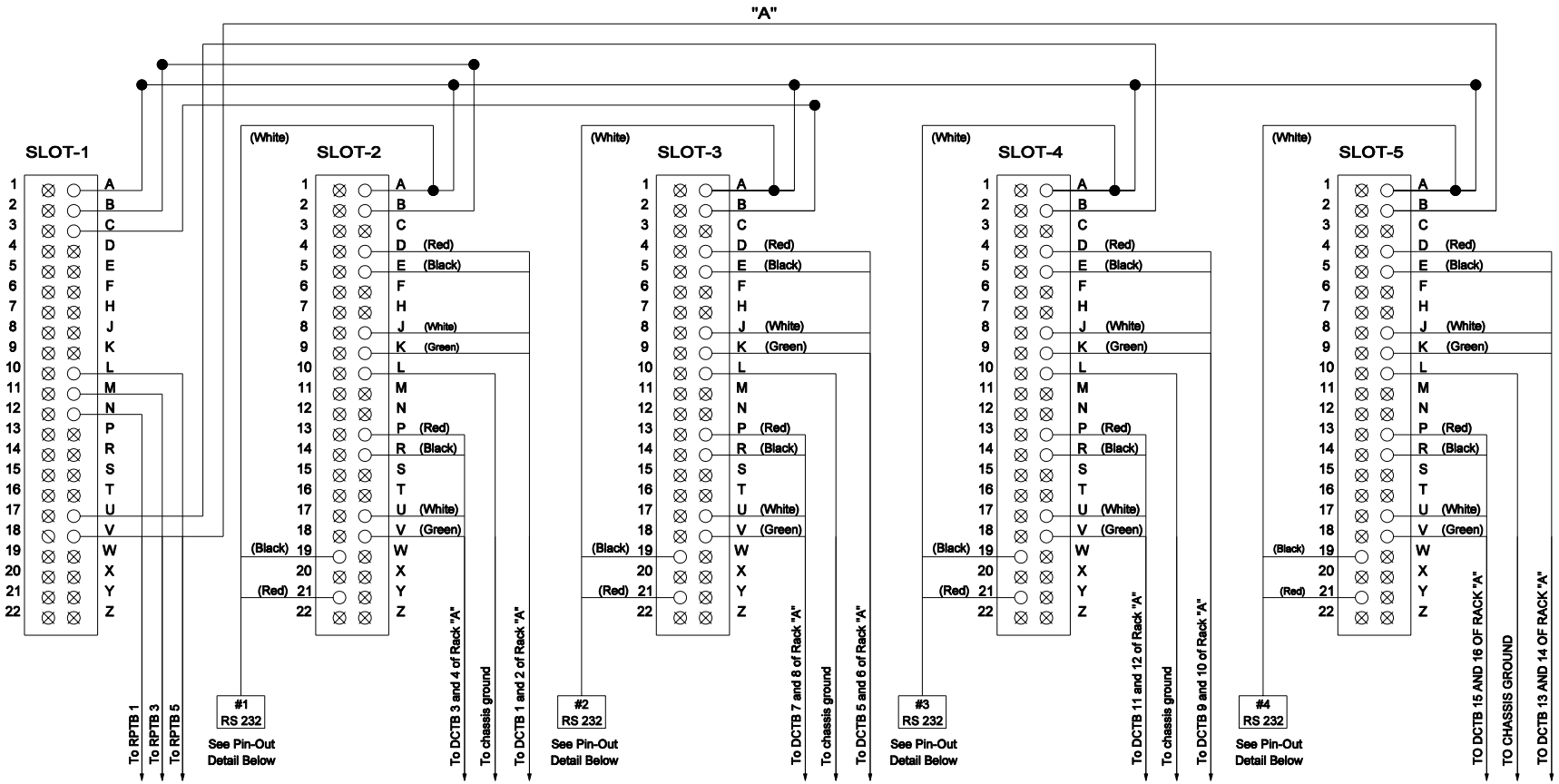

PINS ON BACK OF CARD RACKGROUP "A" SHOWN. 4-SLOT RACK GROUPS "B", "C", "D" NOT SHOWN.

NOTES:

1. See Standard Drawings E 809-ITCS-01 thru-05 or -06A and -07 for additional ITS cabinet details.

INDIANA DEPARTMENT OF TRANSPORTATION

INDOT ITS CABINET MICROLOOP CARD RACK WIRING DIAGRAM

MARCH 2006

STANDARD DRAWING NO. E 809-ITSC-06

RICHARD L. VanCLEAVE REGISTERED No. 9750 STATE OF INDIANA PROFESSIONAL ENGINEER

DESIGN STANDARDS ENGINEER

/s/ Richard L. VanCleave 3-01-06
DESIGN STANDARDS ENGINEER DATE

/s/ Richard K. Smutzer 3-01-06
CHIEF HIGHWAY ENGINEER DATE

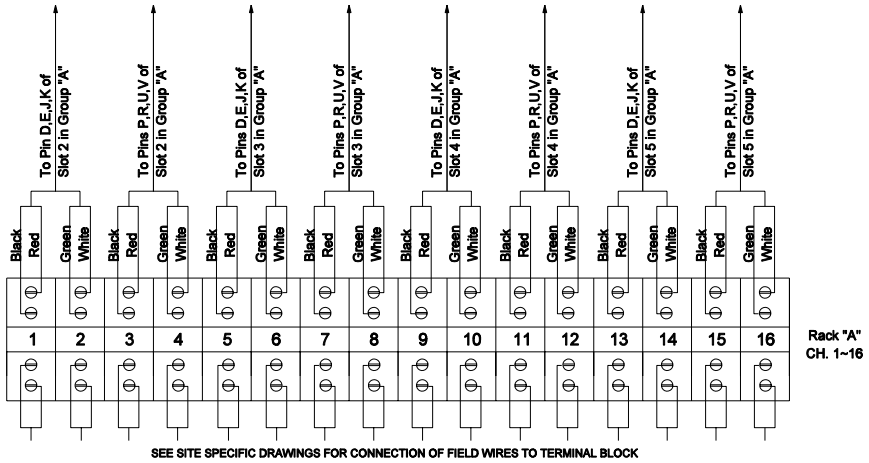

SEE SITE SPECIFIC DRAWINGS FOR CONNECTION OF FIELD WIRES TO TERMINAL BLOCK

DETECTOR CARD DIN RAIL
TERMINAL BLOCKS (DCTB)

(16-BLOCK DIN RAIL GROUPS "B", "C", "D" NOT SHOWN)

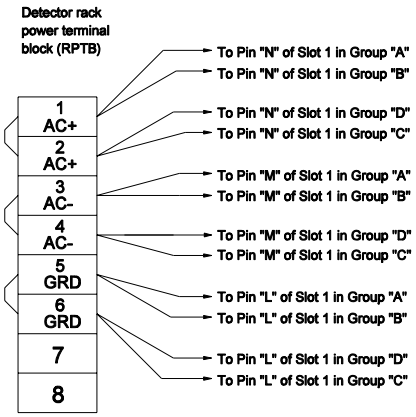

NOTES:

1. Cables from rack to field terminal block shall be two pair twisted with a sheild on each pair.
2. Field terminal blocks shall be Entrelec #0115-271.22
3. Cables from rack to field terminal blocks shall be 10' in length with extra coiled P on end of rack.
4. Slot 1 for rack power module. Slots 2 through 5 are for canoga channel cards.
5. See Standard Drawings E 809-ITSC-01 thur -06 or -07 for additional ITS cabinet details.

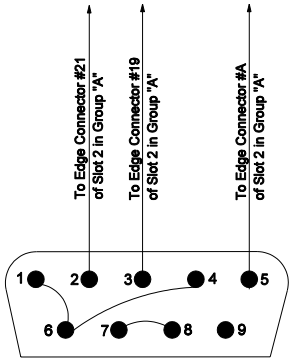

#1 RS232

PIN-OUT DETAIL

INDIANA DEPARTMENT OF TRANSPORTATION

INDOT ITS CABINET MICROLOOP CARD RACK WIRING DIAGRAM

MARCH 2006

STANDARD DRAWING NO. E 809-ITSC-06A

RICHARD L. VanCLEAVE REGISTERED No. 9750 STATE OF INDIANA PROFESSIONAL ENGINEER

DESIGN STANDARDS ENGINEER

/s/ Richard L. VanCleave — 3-01-06
DESIGN STANDARDS ENGINEER — DATE

/s/ Richard K. Smutzer — 3-01-06
CHIEF HIGHWAY ENGINEER — DATE

CABINET LIGHT
ON
○
OFF

RACK A	RACK B	RACK C	RACK D

Above tags are one each for a total of 4 tags.
RACK A, RACK B, RACK C, and RACK D

GFI RECEPTACLE	EQUIPMENT #1 RECEPTACLE #2

MAIN BREAKER

GFI	RECEP #1	RECEP #2	HEATER #1	HEATER #2	CABINET FANS	DETECTOR RACKS	SPARE

SURGE SUPPRESSOR

HEATER #2	HEATER #1

HEATER 1 and HEATER 2 are 1 tag Each.

HEATER RELAY #2	HEATER RELAY #1	HEATING THERMO STAT	COOLING FAN THERMO STAT

RACK A	RACK B	RACK C	RACK D

ALARM I/O MODULE

NOTES:

1. See Standard Drawings E 809-ITCS-01 thru -06A for additional ITS cabinet details.

INDIANA DEPARTMENT OF TRANSPORTATION

ENGRAVED TAG DETAIL

MARCH 2006

STANDARD DRAWING NO. E 809-ITSC-07

RICHARD L. VanCLEAVE REGISTERED No. 9750 STATE OF INDIANA PROFESSIONAL ENGINEER

DESIGN STANDARDS ENGINEER

/s/ Richard L. VanCleave 3-01-06
DESIGN STANDARDS ENGINEER DATE

/s/ Richard K. Smutzer 3-01-06
CHIEF HIGHWAY ENGINEER DATE